TEK SERVICE MANUAL

Part No. 070-4796-00
Product Group 40

466

STORAGE OSCILLOSCOPE

WITH OPTIONS
Serial Number B200000 and up

WARNING

THE FOLLOWING SERVICING INSTRUCTIONS ARE FOR USE BY QUALIFIED PERSONNEL ONLY. TO AVOID PERSONAL INJURY, DO NOT PERFORM ANY SERVICING OTHER THAN THAT CONTAINED IN OPERATING INSTRUCTIONS UNLESS YOU ARE QUALIFIED TO DO SO.

Please Check for CHANGE INFORMATION at the Rear of This Manual

First Printing MAR 1984
Revised DEC 1987

Tektronix®
COMMITTED TO EXCELLENCE

http://manoman.sqhill.com

Copyright © 1974, 1976, 1984 Tektronix, Inc. All rights reserved. Contents of this publication may not be reproduced in any form without the written permission of Tektronix, Inc.

Products of Tektronix, Inc. and its subsidiaries are covered by U.S. and foreign patents and/or pending patents.

TEKTRONIX, TEK, SCOPE-MOBILE, and  are registered trademarks of Tektronix, Inc. TELEQUIPMENT is a registered trademark of Tektronix U.K. Limited.

Printed in U.S.A. Specification and price change privileges are reserved.

INSTRUMENT SERIAL NUMBERS

Each instrument has a serial number on a panel insert, tag, or stamped on the chassis. The first number or letter designates the country of manufacture. The last five digits of the serial number are assigned sequentially and are unique to each instrument. Those manufactured in the United States have six unique digits. The country of manufacture is identified as follows:

B000000	Tektronix, Inc., Beaverton, Oregon, USA
100000	Tektronix Guernsey, Ltd., Channel Islands
200000	Tektronix United Kingdom, Ltd., London
300000	Sony/Tektronix, Japan
700000	Tektronix Holland, NV, Heerenveen, The Netherlands

http://manoman.sqhill.com

TABLE OF CONTENTS

		Page
LIST OF ILLUSTRATIONS		iii
LIST OF TABLES		v
OPERATORS SAFETY SUMMARY		vi
SERVICING SAFETY SUMMARY		vii
Section 1	**SPECIFICATION**	
	Introduction	1-1
	Standard Accessories	1-9
Section 2	**OPERATING INSTRUCTIONS**	
	PREPARATION FOR USE	2-1
	SAFETY INFORMATION	2-1
	OPERATING VOLTAGE	2-1
	NOMINAL LINE VOLTAGE RANGE	2-1
	OPTIONS	2-2
	CONTROLS, CONNECTORS AND INDICATORS	2-3
	VERTICAL	2-3
	DISPLAY AND STORAGE	2-4
	TRIGGER	2-5
	HORIZONTAL AND POWER	2-7
	REAR PANEL	2-8
	RIGHT SIDE PANEL	2-8
	LEFT SIDE PANEL	2-8
	P6062B 10X—1X PROBE	2-9
	OSCILLOSCOPE DISPLAYS	2-10
	BASIC DISPLAYS	2-10
	STORAGE DISPLAYS	2-11
	PERFORMANCE CHECK	2-13
	A. PRELIMINARY PROCEDURE	2-15
	B. VERTICAL	2-15
	C. TRIGGER	2-18
	D. DM-SERIES DIGITAL MULTIMETERS	2-26
	E. HORIZONTAL	2-26
	F. REDUCED SCAN AND STORAGE	2-32
	G. X-Y DISPLAY, Z-AXIS AND GATE OUTPUTS	2-36
Section 3	**CIRCUIT DESCRIPTION**	
	BLOCK DIAGRAM DESCRIPTION	3-1
	VERTICAL SECTION	3-1
	HORIZONTAL SECTION	3-2
	Z-AXIS AMPLIFIER	3-2
	POWER SECTION	3-2
	DETAILED CIRCUIT DESCRIPTION	3-3
	VERTICAL SECTION	3-3
	HORIZONTAL SECTION	3-13
	CALIBRATOR	3-20
	LOW-VOLTAGE POWER SUPPLY	3-20
	FAN MOTOR CIRCUIT	3-21
	Z-AXIS/CRT CIRCUIT	3-21
	STORAGE CIRCUITS	3-24
Section 4	**MAINTENANCE**	
	INTRODUCTION	4-1
	CABINET REMOVAL	4-1
	PREVENTIVE MAINTENANCE	4-1
	CORRECTIVE MAINTENANCE	4-3
Section 5	**CALIBRATION**	
	INTRODUCTION	5-1
	TEST EQUIPMENT REQUIRED	5-2
	CABINET REMOVAL	5-5
	A. POWER SUPPLIES AND CALIBRATOR	5-6
	B. DISPLAY AND Z-AXIS	5-9
	C. VERTICAL	5-11
	D. TRIGGER	5-23
	E. DM-SERIES DIGITAL MULTIMETERS	5-34
	F. HORIZONTAL	5-35
	G. REDUCED SCAN AND STORAGE	5-46
	H. X-Y DISPLAY, Z-AXIS AND GATE OUTPUTS	5-55

http://manoman.sghill.com

TABLE OF CONTENTS (cont)

Page

OPTION INFORMATION

OPTION 04 ..... Option 04 Page 1
REPLACEABLE PARTS ..... Option 04 Page 2
OPTION 05 TV SYNC SEPARATOR ..... Option 05 Page 1
INTRODUCTION ..... Option 05 Page 1
GENERAL INFORMATION ..... Option 05 Page 1
CHARACTERISTICS ..... Option 05 Page 2
FURNISHED ACCESSORIES ..... Option 05 Page 2
OPERATING INFORMATION ..... Option 05 Page 2
IDENTIFYING FIELDS, FRAMES AND LINES IN 525/60 AND 625/50 TV SYSTEMS ..... Option 05 Page 5
CIRCUIT DESCRIPTION ..... Option 05 Page 5
CALIBRATION PROCEDURE ..... Option 05 Page 8
OPTION 07 ..... Option 07 Page 1
INTRODUCTION ..... Option 07 Page 1
SPECIFICATIONS ..... Option 07 Page 1
SAFETY CONSIDERATIONS ..... Option 07 Page 1
FUNCTION OF CONTROLS AND CONNECTORS ..... Option 07 Page 1
OPERATION AND INSPECTION ..... Option 07 Page 1
CIRCUIT DESCRIPTION ..... Option 07 Page 2
MAINTENANCE ..... Option 07 Page 4
CALIBRATION ..... Option 07 Page 4
REPLACEABLE ELECTRICAL PARTS ..... Option 07 Page 9
REPLACEABLE MECHANICAL PARTS ..... Option 07 Page 12
OPTION 1Y ..... Option 1Y Page 1
POWER CORD OPTIONS ..... Option A1/A4 Page 1

Section 6 REPLACEABLE ELECTRICAL PARTS

Section 7 DIAGRAMS

Section 8 REPLACEABLE MECHANICAL PARTS ACCESSORIES

CHANGE INFORMATION

http://manoman.sqhill.com

LIST OF ILLUSTRATIONS

Figure		Page
	The 466 Portable Storage Oscilloscope	viii
1-1	Differential time measurement accuracy	1-5
1-2	Dimensional drawing	1-10
2-1	Regulating Range selector and line fuse	2-2
2-2	Vertical section	2-3
2-3	Display and Storage sections	2-4
2-4	Partial Trigger section	2-5
2-5	Horizontal and Power sections	2-7
2-6	Rear Panel section	2-8
2-7	Left Side Panel controls	2-9
2-8	P6062B Probe	2-9
3-1	Detailed block diagram of the Channel 1 Premplifier circuit	3-4
3-2	Simplified block diagram of gate-control logic	3-6
3-3	ROM program of 466 mode control	3-8
3-4	Sample sequence of outputs from ROM U3605	3-9
3-5	Waveform at the junction of R3903 and C3804	3-11
3-6	Detailed block diagram of A Sweep Generator circuit	3-15
3-7	Detailed block diagram of Horizontal Amplifier circuit	3-19
3-8	Detailed block diagram of Z-Axis/CRT circuit	3-22
3-9A	Shift Register and Storage Logic output	3-26
3-9B	Shift Register and Storage Logic output signals in the Fast mode	3-26
3-10	Detailed block diagram of Erase and Timing circuit	3-27
3-11	Block diagram of Storage Output circuits	3-29
3-12	Non-Store mode—CRT storage element voltage levels	3-30
3-13	Variable Persistence mode—CRT storage element voltage levels	3-30
3-14	Fast mode—CRT storage element voltage levels	3-31
3-15	Multi-Fast mode—CRT storage element voltage levels	3-31
4-1	Typical rear cabinet frame removal	4-1
5-1	Typical rear cabinet frame removal	5-5
5-2	Typical display when high-frequency compensation is correctly adjusted	5-20
5-3	TRIGGER LEVEL adjusted so sweep starts 0.5 div away from 0 level (graticule center) setting	5-30
5-4	A INTEN mode	5-36
5-5	B DLY'D mode	5-36
5-6	Fast-rise, low-repetition-rate signals	5-36
5-7	0.2 μs/div timing	5-39
5-8	0.5 μs/div timing	5-39
5-9	Delay-time accuracy	5-43
5-10	Front Mesh Op Level (R1933) adjustment	5-48
5-11	Front Mesh Prep Level (R1927) adjustment (STORAGE LEVEL set at 3 o'clock)	5-49
5-12	Front Mesh Hold Level (R1935) adjustment	5-50
5-13	Display when R1982, R1989, and STORAGE LEVEL are adjusted for FAST storage	5-52
5-14	X-Y Phasing check	5-56

http://manoman.sqhill.com

LIST OF ILLUSTRATIONS (cont)

Figure		Page
Option 4-1	Option 04 primary winding with power line filter	Option 04 Page 1
Option 5-1	466 Oscilloscope with Option 05	Option 05 Page 1
Option 5-2	Option 05 block diagram	Option 05 Page 6
Option 5-3	A12—TV Sync Separator and Inverter Ampl board component locations	Option 05 Page 11
Option 5-4	Option 05 Vertical Input changes	Option 05 Page 11
Option 5-5	Option 05 Trigger Switches and Trigger Pickoff	Option 05 Page 12
Option 5-6	Option 05 TV Sync Separator and Inverter Amplifier	Option 05 Page 13
Option 7-1	Option 07 simplified block diagram	Option 07 Page 2
Option 7-2	Typical battery pack discharge curves	Option 07 Page 4
Option 7-3	Inverter balance	Option 07 Page 5
Option 7-4	Circuit board layout with component locator grid	Option 07 Page 6
Option 7-5	The 464 Option 07 dc inverter	Option 07 Page 7
Option 7-6	Circuit board layout with test voltages	Option 07 Page 7
Option 7-7	466 Option 07 primary winding	Option 07 Page 8
Option 7-8	Typical idealized waveforms	Option 07 Page 8
Option 7-9	Option 07 exploded view	Option 07 Page 13
Option 1Y-1	Partial Power Supply and Distribution	Option 1Y Page 1

7-1	Semiconductor lead configurations.
7-2	466 block diagram.
7-3	A1—Attenuator board.
7-4	A2—Vertical Preamp board.
7-5	A3—Vertical Mode Switch board.
7-6	A4—Vertical Output Amplifier board.
7-7	A5—Trigger Generator and Sweep Logic board.
7-8	A6—Interface board.
7-9	A7—Timing board.
7-10	A8—High Voltage Multiplier board.
7-11	A10—Storage and Logic board.
7-12	A11—Fan Motor board.
7-13	Adjustment locations 1.
7-14	Adjustment locations 2.
7-15	Adjustment locations 3.

http://manoman.sqhill.com

LIST OF TABLES

Table		Page
1-1	Electrical Characteristics	1-1
1-2	Environmental Characteristics	1-8
1-3	Physical Characteristics	1-9
2-1	Power Cord Conductor Identification	2-1
2-2	Regulating Ranges	2-2
2-3	Recommended Equipment	2-14
2-4	Vertical Deflection Accuracy	2-17
2-5	Differential Time Accuracy	2-27
2-6	B Timing Accuracy	2-28
2-7	A Timing Accuracy	2-28
2-8	A and B Magnified Accuracy	2-29
2-9	Differential Time Accuracy	2-30
3-1	CRT Cathode Voltages	3-24
5-1	Test Equipment Required	5-2
5-2	Low-Voltage Power Supply Limits	5-7
5-3	Low-Voltage Power Supply Limits	5-7
5-4	Typical Low-Voltage Power Supply Ripple	5-7
5-5	Vertical Deflection Accuracy	5-15
5-6	Maximum Overshoot or Roll-off	5-16
5-7	Vertical Output Low-Frequency Compensation Adjustments	5-17
5-8	CH 1 Low-Frequency Compensation	5-17
5-9	CH 2 Low-Frequency Compensation	5-17
5-10	Volts/Div Compensation	5-18
5-11	Differential Time Accuracy	5-37
5-12	B Timing Accuracy	5-40
5-13	A Timing Accuracy	5-41
5-14	A and B Magnified Accuracy	5-42
5-15	Delay Time Accuracy	5-44
Option 5-1	Test Equipment Required	Option 05 Page 8
Option 7-1	Option 07 Mode Switch Setting	Option 07 Page 1
Option A1/A4-1	Plug Configuration and Line Voltage Data	Option A1/A4 Page 1

http://manoman.sqhill.com

OPERATORS SAFETY SUMMARY

The general safety information in this part of the summary is for both operating and servicing personnel. Specific warnings and cautions will be found throughout the manual where they apply and do not appear in this summary.

Terms in This Manual

CAUTION statements identify conditions or practices that could result in damage to the equipment or other property.

WARNING statements identify conditions or practices that could result in personal injury or loss of life.

Terms as Marked on Equipment

CAUTION indicates either a personal injury hazard not immediately accessible as one reads the marking or a hazard to property, including the equipment itself.

DANGER indicates a personal injury hazard immediately accessible as one reads the marking.

Symbols as Marked on Equipment



DANGER—High voltage.



Protective ground (earth) terminal.

Power Source

This product is intended to operate from a power source that does not apply more than 240 volts rms between the supply conductors or between either supply conductor and ground. A protective ground connection by way of the grounding conductor in the power cord is essential for safe operation.

Grounding the Product

This product is grounded through the grounding conductor of the power cord. To avoid electrical shock, plug the power cord into a properly wired receptacle before connecting to the product input or output terminals. A protective ground connection by way of the grounding conductor in the power cord is essential for safe operation.

Danger Arising From Loss of Ground

Upon loss of the protective-ground connection, all accessible conductive parts (including knobs and controls that may appear to be insulating) can render an electric shock.

Use the Proper Power Cord

Use only the power cord and connector specified for your product.

Use only a power cord that is in good condition.

Use the Proper Fuse

To avoid fire hazard, use only a fuse of the correct type, voltage rating, and current rating as specified in the parts list for your product.

Refer fuse replacement to qualified service personnel.

Do Not Operate in Explosive Atmospheres

To avoid explosion, do not operate this product in an explosive atmosphere.

Do Not Remove Covers or Panels

To avoid personal injury, do not remove the product covers or panels. Do not operate the product without the covers and panels properly installed.

http://manoman.sqhill.com

SERVICING SAFETY SUMMARY

FOR QUALIFIED SERVICE PERSONNEL ONLY

Refer also to the preceding Operators Safety Summary

Do Not Service Alone

Do not perform internal service or adjustment of this product unless another person capable of rendering first aid and resuscitation is present.

Use Care When Servicing With Power On

Dangerous voltages exist at several points in this product. To avoid personal injury, do not touch exposed connections or components while power is on.

Disconnect power before removing protective panels, soldering, or replacing components.

Power Source

This product is intended to operate from a power source that does not apply more than 250 volts rms between the supply conductors or between either supply conductor and ground. A protective ground connection by way of the grounding conductor in the power cord is essential for safe operation.

http://manoman.sqhill.com



4796-01

The 466 Storage Oscilloscope

http://manoman.sqhill.com

SPECIFICATION

Introduction

The TEKTRONIX 466 is a dual-channel portable oscilloscope. The 466 storage system provides storage for displays with a writing speed up to 3000 divisions/microsecond (in the Fast-Reduced Scan mode). Storage viewing time is greater than 15 seconds at full stored display intensity—extending to more than 6 minutes using reduced intensity in the Save mode.

The dual-channel dc-to-100 MHz vertical system provides calibrated deflection factors from 5 mV to 5 V/division. The sweep trigger circuits are capable of stable triggering over the full bandwidth capabilities of the vertical deflection system. The horizontal deflection system provides calibrated sweep rates from 0.5 s to 0.05 μs/division along with delayed sweep features for accurate relative-time measurements. A X10 magnifier extends the calibrated sweep rate to 5 ns/division. The instrument operates over a wide variation of line voltages and frequencies. Maximum power consumption is about 100 watts.

This instrument will meet the electrical characteristics listed in the Performance Requirement column of Table 1-1 following complete calibration as given in Section 5. The performance check procedure which is given in Section 2 provides a convenient method of checking instrument performance without making internal checks or adjustments. The following electrical characteristics apply over an ambient temperature range of −15°C to +55°C, except as otherwise indicated. Warmup time for given accuracy is 20 minutes.

Table 1-1
ELECTRICAL CHARACTERISTICS

Characteristics	Performance Requirements	Supplemental Information
VERTICAL DEFLECTION SYSTEM (CH 1 and CH 2)		
Deflection Factor Calibrated Range	5 mV to 5 V/div in 10 steps; 1-2-5 sequence.	
Cascaded Operation (CH 1 VERT SIGNAL OUT Connected to CH 2)	Deflection Sensitivity at least 1 mV/div. Bandwidth: Dc to at least 50 MHz.	CH 1 OUT connected to CH 2 input, ac coupled using a 50 Ω 42 inch cable terminated in 50 Ω at CH 2 input.
Uncalibrated (VAR VOLTS/DIV) Range	Provides continuously variable deflection factors between the calibrated steps. Extends maximum uncalibrated deflection factor to at least 12.5 volts per division in the 5 V/div position.	At least 2.5:1.
Low Frequency Linearity		0.1 division or less compression or expansion of 2 division signal at center screen positioned to the upper and lower extremes of the graticule area.
Deflection Factor Accuracy	Within 3% of indicated deflection.	With GAIN set at 5 mV/div.
Bandwidth	Dc to 100 MHz or greater (−15°C to +40°C). Dc to 85 MHz (+40°C to +55°C).	With a 5 division, vertically centered, reference signal from a 25 Ω source and VAR VOLTS/DIV in calibrated position.
Risetime (calculated)[a]	3.5 ns or less (−15°C to +40°C). 4.15 ns or less (+40°C to +55°C).	(Same as for Bandwidth.)

[a]**Risetime is calculated from the formula:** $\frac{0.35}{\text{BW (In megahertz)}}$

http://manoman.sqhill.com

Table 1-1 (cont)

Characteristics	Performance Requirements	Supplemental Information
VERTICAL DEFLECTION SYSTEM (CH 1 and CH 2) (cont)		
AC Coupled Lower −3 dB Point	10 Hz or less with 1X probe.	1 Hz or less with 10X probe.
Bandwidth with 20 MHz BW Switch in 20 MHz Position.	Approximately 20 MHz.	−3 dB point between 15 MHz and 25 MHz.
Input Gate Current		0.5 nanoampere or less (0.1 division of deflection at 5 mV/div) from −15°C to +30°C. 4 nA or less (0.8 division of deflection at 5 mV/div) from +30°C to +55°C.
Input Resistance and Capacitance	1 MΩ within 2%. 22 pF ±3%.	Aberrations 2% or less using a P6062B probe (+20°C to +30°C).
Step Response		Step Response is based on a 5 division, vertically centered, dc coupled reference signal at all deflection factors from a 25 Ω source with VAR VOLTS/DIV control in the calibrated position, from 0°C to +40°C.
Positive-Going Step Aberrations (excluding ADD mode) (0°C to +40°C)		≤+4%, −4%, 4% p-p, except in 1, 2, 5 V/div ranges which is ≤+5%, −5%, 5% p-p.
Negative-Going Step		Add 2% to positive-going step aberrations.
ADD Mode		Add 5% to positive-going step aberrations.
Position Effect		Total aberrations not to exceed +5%, −5% or a total of 5% p-p.
Common-Mode Rejection Ratio (ADD Mode with CH 2 inverted)		At least 10:1 at 20 MHz for common-mode signals of 6 divisions or less with GAIN adjusted for best CMRR at 50 kHz.
Trace Shift as VAR is Rotated		Adjusts to 1.0 divisions or less.
Step Attenuator Balance		Adjustable to 0.2 division or less of trace shift when switching between adjacent deflection factor settings.
INVERT Trace Shift		Within 0.2 division when switching from normal to inverted.
Channel Isolation		At least 100:1 at 25 MHz.
Position Range		At least +12 and −12 divisions from graticule center.
Signal Delay Between CH 1 and CH 2		Approximately 120 ns.
Maximum Input Voltage	Dc coupled: 250 V (dc + peak ac) or 500 V p-p ac at 1 kHz or less. Ac coupled: 500 V (dc + peak ac) or 500 V p-p ac at 1 kHz or less.	
Chopped Mode Repetition Rate	500 kHz.	Within 20%.

http://manoman.sqhill.com

Table 1-1 (cont)

Characteristics	Performance Requirements	Supplemental Information
TRIGGER SYSTEM		
Sensitivity		In EXT ÷10, multiply requirements by 10.
DC Coupled	0.3 div internal or 50 mV external from dc to 25 MHz, increasing to 1.5 div internal or 150 mV external at 100 MHz.	
AC Coupled	0.3 div internal or 50 mV external from 30 Hz to 25 MHz, increasing to 1.5 div internal or 150 mV external at 100 MHz. Attenuates signals below about 30 Hz.	
HF REJ Coupled	0.5 div internal or 50 mV external from 30 Hz to 50 kHz. Blocks dc and attenuates signal below about 30 Hz and above about 50 kHz.	
LF REJ Coupled	0.5 div internal or 100 mV external from 50 kHz to 25 MHz, increasing to 1.5 div internal or 300 mV external at 100 MHz. Attenuates signals below about 50 kHz.	In EXT ÷ 10, multiply requirements by 10.
Trigger Jitter	0.5 ns or less at 100 MHz with 5 ns/div sweep rate (X10 MAG on).	
External Trigger Input		
Maximum Input Voltage	250 V dc + peak ac or 250 V p-p ac (1 kHz or less).	
Input Resistance and Capacitance	1 MΩ with 10%.	20 pF within 30%.
LEVEL Control Range		
EXT	At least ±2 V, 4 V p-p.	
EXT ÷ 10	At least ±20 V, 40 V p-p.	
Trigger View		
Deflection Factor		
EXT	100 mV/div ±5%.	Exclude LF REJ and HF REJ trigger coupling modes.
EXT ÷ 10	1 V/div ±5%	
Centering of Trigger Point	Within 1.0 division of center screen.	

http://manoman.sqhill.com

Table 1-1 (cont)

Characteristics	Performance Requirements		Supplemental Information
HORIZONTAL DEFLECTION SYSTEM			
Calibrated Sweep Range			
A Sweep	0.5 s/div to 0.05 μs/div in 22 steps; 1-2-5 sequence. X10 MAG extends maximum sweep rate to 5 ns/div.		
B Sweep	50 ms/div to 0.05 μs/div in 19 steps; 1-2-5 sequence. X10 MAG extends maximum sweep rate to 5 ns/div.		
Calibrated Sweep Accuracy	**Unmagnified**	**Magnified**	Accuracy specification applies over the full 10 divisions of deflection unless otherwise specified.
+20°C to +30°C	±2%	±3%	Exclude the first and last 50 ns of the sweep when checking magnified 5 ns, 10 ns, and 20 ns sweep rates.
−15°C to +55°C	±3%	±4%	
Sweep Accuracy Over Any 2 Division Interval	Within 5% over any 2 division interval. Exclude first and last magnified divisions when checking 5 ns/div and 10 ns/div (X10 MAG on).		
Mixed Sweep Accuracy	Within 2% plus measured A Sweep error when viewing the A portion only. B Sweep portion of mixed sweep retains B Sweep accuracy.		Exclude the first 0.5 div after display start and the first 0.2 division or 0.1 μs (whichever is greater) after the transition of A to B.
VAR TIME/DIV Control Range (A Only)	Continuously variable between calibrated settings. Extends the slowest A sweep rate to at least 1.25 seconds per division.		At least 2.5:1.
Sweep Length (A Only)			10.5 to 11.5 divisions.
A Trigger Holdoff Variable	Increases A sweep holdoff time by at least a factor of 10.		
Magnified Registration			Within 0.2 division from graticule center when switching X10 magnifier from on to off (at 1 ms/div).
POSITION Control Range			Start of sweep must position to right of graticule center. End of sweep must position to left of graticule center.
Delay Time and Differential Time Measurement Accuracy (simplified)	+15°C to +35°C (+60°F to +95°F).	−15°C to +55°C (+5°F to +131°F).	With A TIME/DIV switch at .5 μs/div or .2 μs/div, the differential time measurement accuracy limit is valid only for DELAY-TIME POSITION dial settings between 1.50 and 8.50.
Over One or More Major Dial Divisions	±1%.	±2.5%.	
Over Less Than One Major Dial Division (see Fig. 1-2)	±0.01 Major Dial Division.	±0.03 Major Dial Division.	

http://manoman.sqhill.com

Table 1-1 (cont)

Characteristics	Performance Requirements	Supplemental Information
HORIZONTAL DEFLECTION SYSTEM (cont)		
Delay Time and Differential Time Measurement Accuracy (detailed)	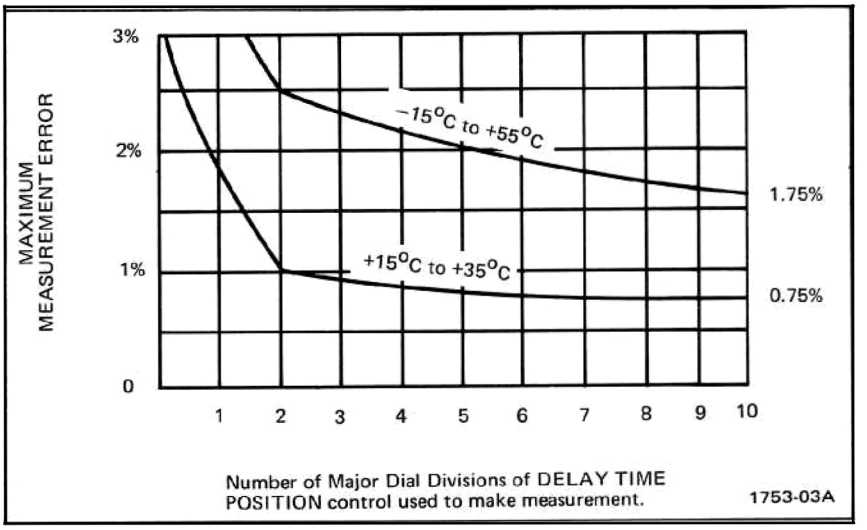	
	Fig. 1-1. Differential time measurement accuracy.	
Delay Time Jitter	Within 0.002% (less than one part in 50,000) of the maximum available delay time, which is 10 times the A TIME/DIV switch setting.	
Delay Range (A VAR control set to CAL)	From 0.2 μs or less to at least 5 seconds after the start of the delaying (A) sweep.	
X-Y OPERATION		
		TIME/DIV switch in extreme ccw position and CH 2 or X-Y VERT MODE button depressed.
Sensitivity		
Y Axis	Same as for vertical deflection system.	
X Axis	Same as for vertical deflection system (with X10 MAG off.)	
Deflection Accuracy		
Y Axis	Same as for vertical deflection system.	
X Axis	Within 4%.	
Variable Range		
X and Y Axis	Same as for vertical deflection system.	
Bandwidth		
Y Axis	Same as for vertical deflection system.	
X Axis	Dc to at least 4 MHz.	X-Axis bandwidth measured using a 10 division reference signal.

http://manoman.sqhill.com

Table 1-1 (cont)

Characteristics	Performance Requirements	Supplemental Information
X-Y OPERATION (cont)		
Input Resistance and Capacitance		
X and Y Axis	Same as for vertical deflection system.	
Maximum Usable Input Voltage		
X and Y Axis	Same as for vertical deflection system.	
Phase Difference between X and Y Axis Amplifiers	Within 3° from dc to 50 kHz.	
CALIBRATOR		
Output Voltage (Square-wave signal)		Adjusted to within 0.5% at 25°C, ±5°C.
0°C to +40°C	300 mV within 1.0%.	
−15°C to +55°C		300 mV within 1.5%.
Repetition Rate	1 kHz.	Within 25%.
Output Resistance		Approximately 9.4 Ω.
Output Current		
+20°C to +30°C	30 mA within 2%.	
−15°C to +55°C		30 mA within 2.5%.
Z AXIS INPUT		
Sensitivity	5 V p-p signal causes noticeable modulation at normal intensity.	Positive-going signal from ground decreases intensity.
Usable Frequency Range	Dc to 50 MHz.	
Maximum Input Voltage		100 V (dc plus peak ac). 100 V p-p ac at 1 kHz or less.
SIGNAL OUTPUTS		
CH 1 VERT SIGNAL OUT		
Output Voltage		
Into 1 MΩ load	One division of deflection gives at least 50 mV.	
Into 50 Ω load	One division of deflection gives at least 25 mV.	
Output Resistance		Approximately 50 Ω.
Bandwidth	Dc to at least 50 MHz into 50 Ω.	
Output DC Level	Approximately 0 V.	
A and B + GATE Outputs		
Output Voltage	Approximately 5.5 V positive-going.	
Output Resistance		Approximately 500 Ω.

http://manoman.sqhill.com

Table 1-1 (cont)

Characteristics	Performance Requirements	Supplemental Information
POWER SOURCE		
Line Voltage Ranges (AC, RMS)		
115 V		
Low	110 V, ±10%.	99 V to 121 V.
Medium	115 V, ±10%.	103.5 V to 126.5 V.
High	120 V, ±10%.	108 V to 132 V.
230 V		
Low	220 V, ±10%.	198 V to 242 V.
Medium	230 V, ±10%.	207 V to 253 V.
High	240 V, ±10%.	216 V to 264 V.
Line Frequency	48 Hz to 440 Hz.	
Maximum Power Consumption	100 watts at 132 Vac, 48 Hz (medium range).	
CATHODE-RAY TUBE		
Horizontal Resolution		At least 10 lines/division.
Vertical Resolution		At least 10 lines/division.
Display Area	8 x 10 div.	div = 0.9 cm.
Geometry		0.1 division or less of tilt or bowing.
Raster Distortion		0.1 division or less.
Normal Accelerating Potential		Approximately 8,500 volts in Normal Scan mode, or about 10,500 volts in Reduced Scan mode.
Trace Rotation Range		Adequate to align trace with horizontal center line.
Standard Phosphor	P31.	
STORAGE		
Stored Writing Speed		Measured with 50 V or greater drive above signal extinction (+70 V or greater at Z-axis test point, and not to exceed level where display begins to deteriorate, with visual extinction set at +20 V). It is necessary to use the STORAGE LEVEL control to reach the best compromise between writing speed and view time.
Full Scan (Center 6 X 8 div, 0.9 cm/div)		
FAST	150 div/μs	
VAR PERS	0.5 div/μs	
Reduced Scan (Center 8 X 10 div, 0.45 cm/div)		
FAST	3000 div/μs	
VAR PERS	3 div/μs	
Storage View Time		These times are at full stored display intensity; they can be extended at least 40 times (>10 minutes) using reduced intensity in the SAVE Display Mode.
FAST	At least 15 seconds	
VAR PERS	At least 15 seconds	

http://manoman.sqhill.com

Table 1-2
ENVIRONMENTAL CHARACTERISTICS

Characteristics	Performance Requirements
Temperature	
Operating (AC)	−15°C to +55°C.
Nonoperating (Storage)	−55°C to +75°C.
Altitude	
Operating	To 15,000 feet. Maximum operating temperature decreased 1°C/1,000 feet above 5,000 feet.
Nonoperating (Storage)	To 50,000 feet.
Humidity (Operating and Nonoperating)	5 cycles (120 hours) referenced to MIL-E-16400F.
Vibration (Operating)	15 minutes along each of three major axes at a total displacement of 0.025 inch p-p (4 g's at 55 Hz) with frequency varied from 10 Hz to 55 Hz to 10 Hz in one minute sweeps. After sweep vibration in each axis, hold frequency steady at 55 Hz for three minutes. All major resonances must be above 55 Hz.
Shock (Operating and Nonoperating)	30 g's, 1/2 sine, 11 ms duration, 2 shocks per axis each direction for a total of 12 shocks.
Transportation	Meets the limits of National Safe Transit Committee test procedure 1A with a 30-inch drop.

http://manoman.sghill.com

Table 1-3
PHYSICAL CHARACTERISTICS

Characteristics	Description
Construction	
Chassis	Aluminum alloy.
Panel	Aluminum alloy with anodized finish.
Cabinet	Blue vinyl-coated aluminum alloy.
Circuit Boards	Glass laminate etched-wiring.
Overall Dimension	
Height	
With Feet and Pouch	7.5 inches (19.1 cm).
Without Pouch	6.2 inches (15.7 cm).
Width	
With Handle	12.9 inches (32.8 cm).
Without Handle	11.5 inches (29.2 cm).
Depth	
Including Panel Cover	21.7 inches (55.0 cm).
Handle Extended	23.7 inches (60.0 cm).
Weight	
With Panel Cover, Accessories, and Accessory Pouch	30 pounds (13.6 kg).
Without Panel Cover, Accessories, and Accessory Pouch	26 pounds (11.8 kg).
Domestic Shipping Weight	41.5 pounds (18.8 kg).

Standard Accessories

Standard accessories supplied with the 466 are listed in the Mechanical Parts List in this Service manual. For optional accessories available for use with the 466, see the Tektronix, Inc. catalog.

http://manoman.sghill.com

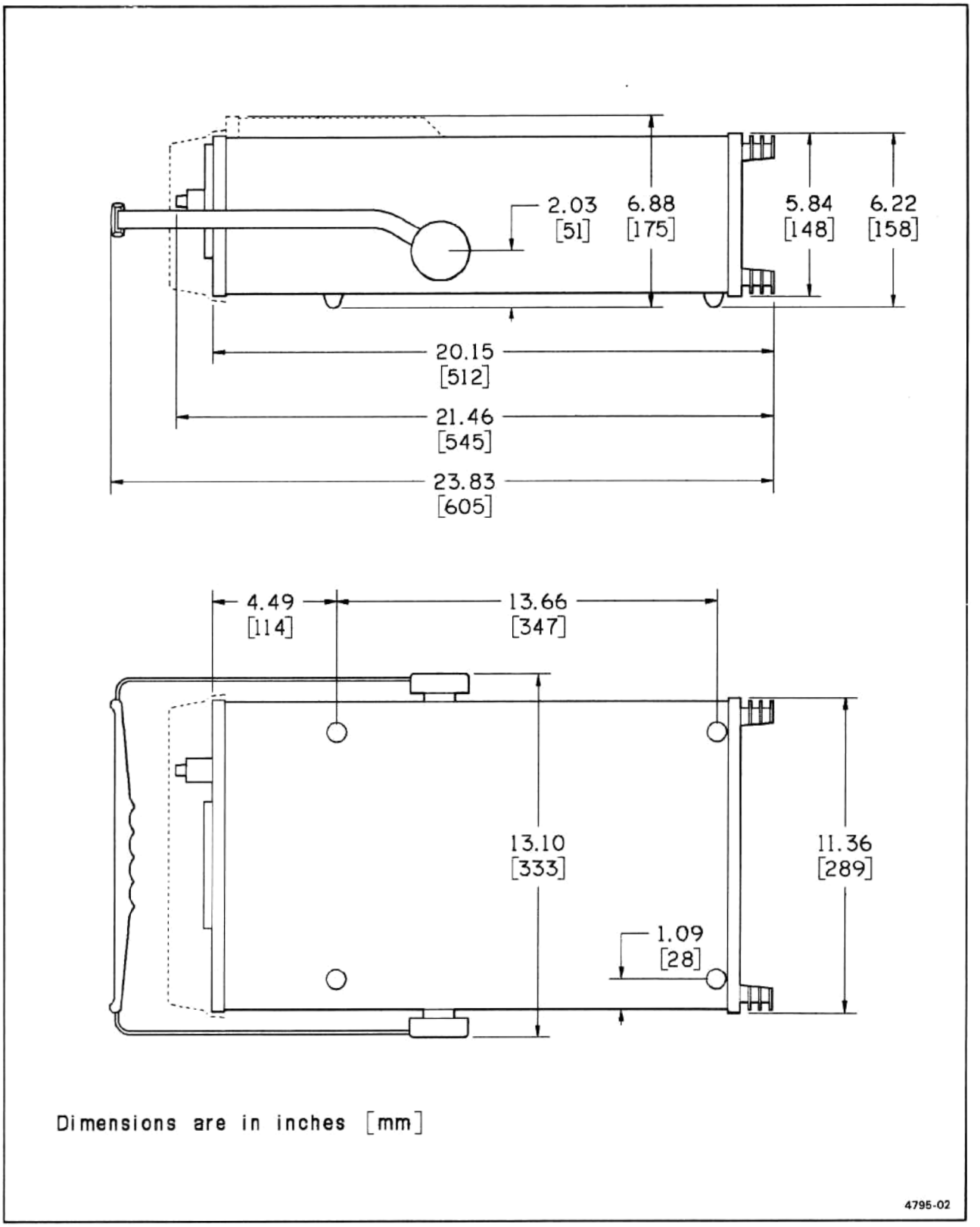

Fig. 1-2. Dimensional drawing.

http://manoman.sqhill.com

OPERATING INSTRUCTIONS

PREPARATION FOR USE

SAFETY INFORMATION

Refer to the Safety Summaries at the front of this manual for power source, grounding, and other safety considerations pertaining to the use of the instrument. Before connecting the oscilloscope to a power source, read entirely both this section and the Safety Summaries.

The instrument is designed to operate from a single-phase power source with one of the current-carrying conductors (the Neutral Conductor) at ground (earth) potential. Operation from power sources where both current-carrying conductors are live with respect to ground (such as phase-to-phase on a three-wire system) is not recommended, since only the Line Conductor has over-current (fuse) protection within the instrument (see Table 2-1).

The instrument has a three-wire power cord with a three-terminal polarized plug for connection to the power source and safety-earth. The ground (earth) terminal of the plug is directly connected to the instrument frame. For electric-shock protection, insert this plug only in a mating outlet with a safety-earth contact.

Instruments are shipped with the required power cord as ordered by the customer. Available power-cord information and part numbers are listed in the "Options Information" in this manual. Contact your Tektronix representative or local Tektronix Field Office for additional power-cord information.

Table 2-1
POWER CORD CONDUCTOR IDENTIFICATION

Conductor	Color	Alternate Color
Ungrounded (Line)	Brown	Black
Grounded (Neutral)	Blue	White
Grounding (Earthing)	Green-Yellow	Green-Yellow

OPERATING VOLTAGE

This instrument operates from either a 115-volt or a 230-volt nominal line voltage source, 48 to 440 Hz.

The Line Voltage Selector switch must indicate the applied line voltage (115 V or 230 V).

The Regulating Range selector (Item 52, Controls, Connectors and Indicators) must indicate the regulating range for the applied operating line voltage.

NOMINAL LINE VOLTAGE RANGE

CAUTION

This instrument may be damaged if operated with the Line Voltage Selector switch or the Regulating Range selector set for the wrong applied line voltage.

To convert from one nominal line voltage range to the other, move the Line Voltage Selector switch (located on side panel) to indicate the correct nominal voltage. A 115-to-230 volt adapter may be required for the line-cord plug.

The Regulating Range Selector assembly (located on the rear panel) is set for one of the line voltage ranges shown in Table 2-2. It also contains the line fuse for overload protection.

To change the regulating range:

1. Disconnect the instrument from the power source.

2. Loosen the two captive screws that hold the cover on the selector assembly; then pull to remove the cover.

http://manoman.sqhill.com

Table 2-2
REGULATING RANGES

Range Selector Switch Position	Regulating Range	
	115-Volts Nominal	230-Volts Nominal
LO (Switch bar in lower holes)	99 to 121 volts	198 to 242 volts
M (Switch bar in middle holes)	104 to 126 volts	207 to 253 volts
HI (Switch bar in upper holes)	108 to 132 volts	216 to 264 volts
Fuse Size	1.5 A 3AG Fast-blow	0.75 A 3AG Fast-blow

3. Pull out the Range Selector switch bar (see Fig. 2-1). Select a range from Table 2-2 that is centered about the average line voltage. Slide the bar to the desired position and plug it in. Push the cover on and tighten the screws.

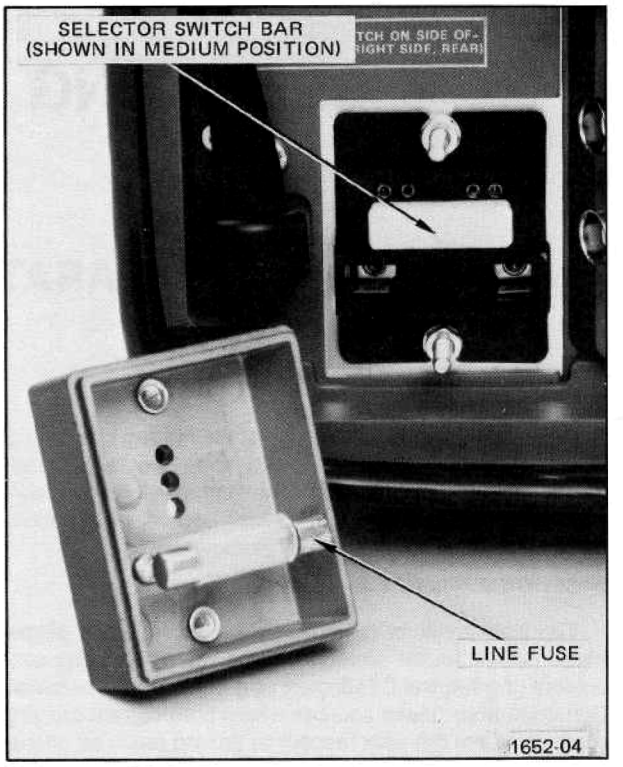

Fig. 2-1. Regulating Range selector and line fuse.

OPTIONS

Options are available that alter oscilloscope performance to meet particular applications. A number in either MOD slot (see Item 54, Controls, Connectors and Indicators) indicates a modified oscilloscope.

Refer to the Option section at the rear of this manual to find any change in operating instruction as a result of the option.

http://manoman.sghill.com

CONTROLS, CONNECTORS AND INDICATORS

VERTICAL

Refer to Fig. 2-2 for location of items 1 through 10.

(1) **CH 1 and CH 2 VOLTS/DIV**—Selects the vertical deflection factor in a 1-2-5 sequence (VARiable control must be in the calibrated detent for the indicated deflection factor).

(2) **VOLTS/DIV READOUT**—Consists of two small indicators for each channel, located beneath the skirt of each VOLTS/DIV knob. The right LED will light up to indicate the correct deflection factor when a 10X probe with a scale-switching connector is used. The left LED lights up when a probe without the scale-switching connection (or no probe) is used.

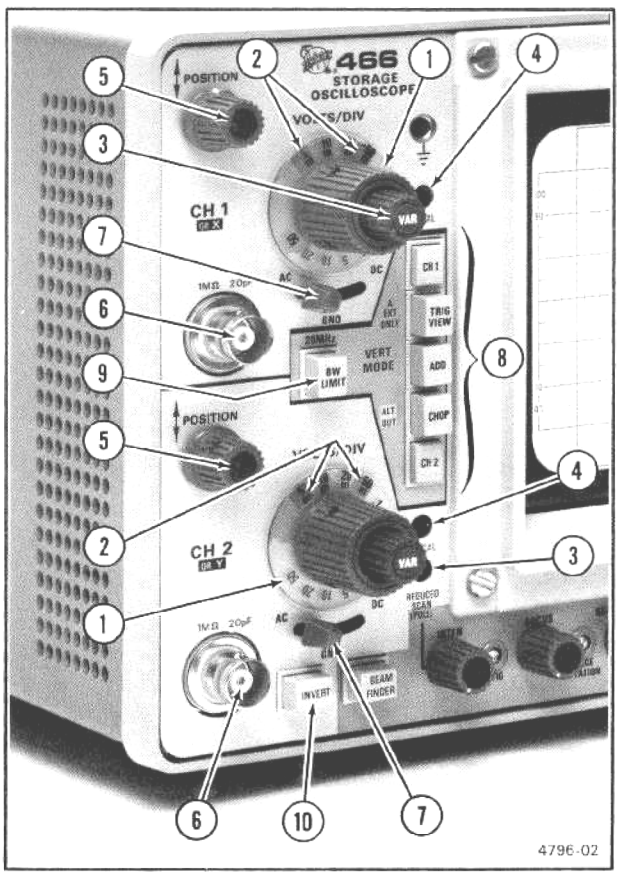

Fig. 2-2. Vertical section.

(3) **VAR**—Provides continuously variable uncalibrated deflection factors between the calibrated settings of the VOLTS/DIV switch, and extends the maximum vertical deflection to at least 12.5 volt per division (5 volt position).

(4) **UNCAL Indicator**—Indicates when the VARiable VOLTS/DIV control is out of the calibrated detent and the vertical deflection factor is uncalibrated.

(5) **POSITION**—Positions the display vertically. CH 2 POSITION positions the Y-Axis (vertical) display in X-Y Mode.

(6) **CH 1 OR X and CH 2 OR Y**—Input connectors for application of external signals to the inputs of the vertical amplifier. In the X-Y mode of operation, the signal connected to the CH 1 OR X connector provides horizontal deflection and the signal connected to the CH 2 OR Y connector provides the vertical deflection.

(7) **AC-GND-DC**—Selects the method used to couple a signal to the input of the vertical amplifier. In the AC position, signals are capacitively coupled to the vertical amplifier. The dc component of the input signal is blocked. In the GND position, the input of the vertical amplifier is disconnected from the input connector and grounded to allow the input coupling capacitor to precharge. In the DC position, all components of the input signal are passed to the input amplifier.

(8) **VERT MODE**—Selects the display of any combination of Channel 1, Channel 2, and Trigger View in either Chopped or Alternate mode.

CH 1—When pressed in, displays Channel 1 signal. To end the signal display, release the CH 1 button by pressing it.

TRIG VIEW—When the TRIG VIEW button is pressed in and the A TRIGGER SOURCE control is in EXT or EXT ÷ 10 position, the signal applied to the external trigger connector is displayed. To end the display of the signal at the external trigger connector, release the TRIG VIEW button by pressing it.

http://manoman.sqhill.com

ADD—When pressed in, displays the algebraic sum of the Channel 1 and Channel 2 input signals. To end the ADD mode display, release the ADD button by pressing it.

CHOP/ALT—When pressed in, the oscilloscope circuitry switches between two or more of the displayed sweeps at a 500 kHz rate.

When released, the oscilloscope circuitry switches between two or more of the displayed sweeps at the end of each sweep (i.e., it Alternates).

CH 2—When pressed in, displays Channel 2 input signal. To end the signal display, release the Ch 2 button by pressing it.

(9) **20 MHz BW LIMIT Switch**—When pressed in, limits the bandwidth of the vertical deflection system to 20 MHz. When released the bandwidth is 100 MHz.

(10) **INVERT**—Channel 2 display is inverted in the INVERT (button in) position.

DISPLAY AND STORAGE

Refer to Fig. 2-3 for location of items 11 through 25.

(11) **INTERNAL GRATICULE**—Eliminates parallax. Risetime amplitude and measurement points are indicated at the left-hand graticule edge.

(12) **BEAM FINDER**—Compresses the display to within the graticule area independently of display position or applied signals; provides a visible viewing level to indicate position of display relative to crt center.

(13)A **INTEN**—Controls brightness of the crt display.

(13)B **REDUCED SCAN (PULL-INTEN knob)**—Reduces display to "inner" graticule with an increase in writing rate.

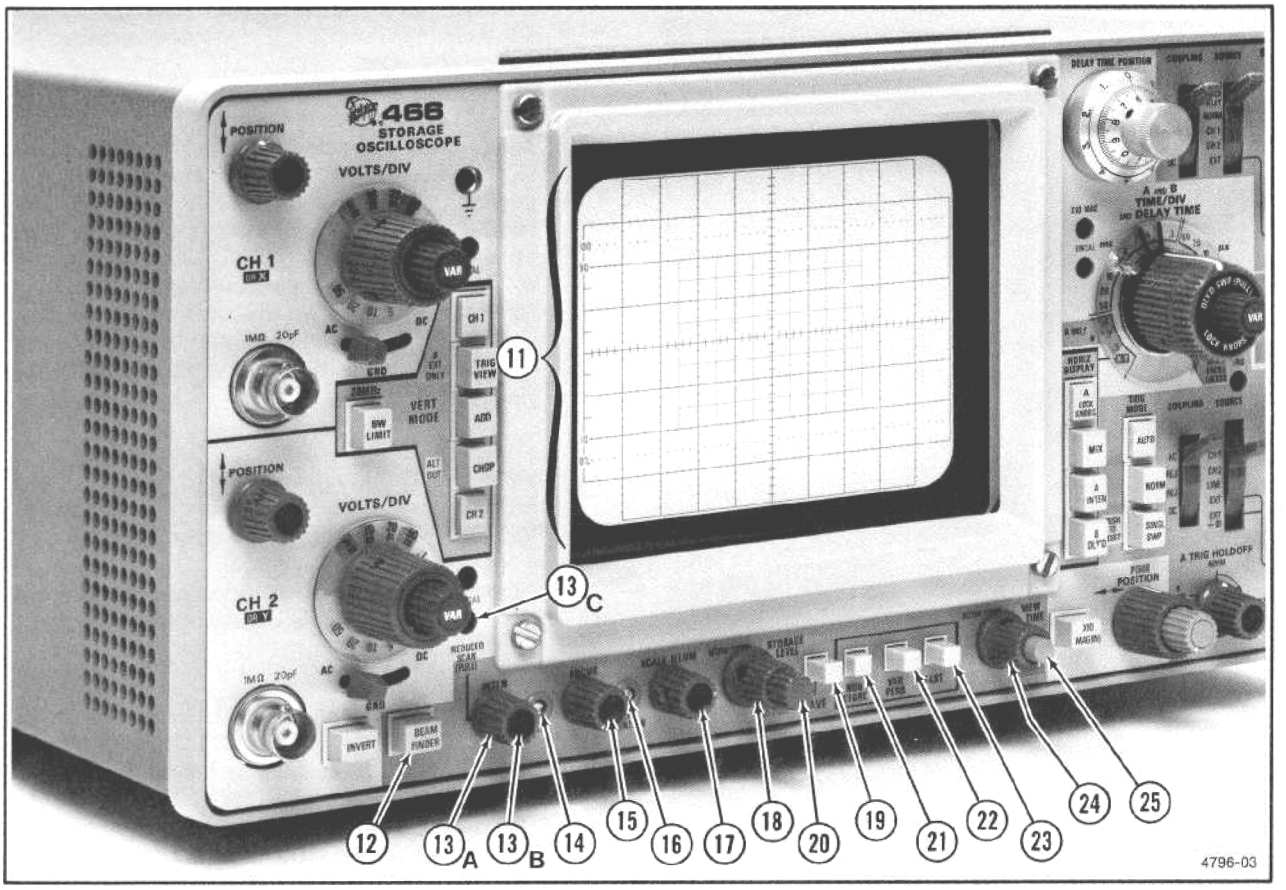

Fig. 2-3. Display and Storage sections.

http://manoman.sqhill.com

(13)C **REDUCED SCAN Indicator)**—Indicates that the REDUCED SCAN mode is in operation.

(14) **ASTIG**—Used in conjunction with the FOCUS control to obtain a well-defined display. It does not require readjustment in normal use.

(15) **FOCUS**—Adjusts for optimum display definition.

(16) **TRACE ROTATION**—Adjusts trace to align with the horizontal graticule lines.

(17) **SCALE ILLUM**—Controls graticule illumination.

(18) **STORAGE LEVEL**—Varies the writing rate of the crt in the FAST and VAR PERS storage modes.

(19) **SAVE**—Provides longer viewing time. It prevents accidental erasure of the stored display.

(20) **SAVE INTEN**—Varies the intensity of the SAVE mode.

(21) **NON STORE**—Allows operation of the instrument as a conventional oscilloscope in the NON STORE mode.

(22) **VAR PERS**—Permits variable retention of the stored display.

(23) **FAST**—Used for fast-writing displays. FAST mode disables the TRIG MODE switch. It automatically sequences an erase cycle, unless the VIEW TIME control is in the full clockwise detent (manual). It waits a time period determined by the VIEW TIME control, then resets the sweep in a single-sweep mode and causes READY LED to light until the sweep is started by an applied signal. Multiple traces can be stored in this mode using the SINGL SWP button. See Storage Displays in this section.

(24) **VIEW TIME**—Varies the retention time (persistence) of the stored display in the VAR PERS mode. It varies the time between erase cycles in FAST mode.

(25) **ERASE**—Erases the stored display, except in SAVE mode when ERASE is disabled.

TRIGGER

Refer to Fig. 2-4 for location of items 26 through 36.

TRIG MODE

Determines the mode of trigger operation for A Sweep.

(26) **AUTO**—Sweep is initiated by the applied trigger signal. In the absence of an adequate trigger signal, or if the trigger repetition rate is less than about 20 Hz, the sweep free runs and provides a bright reference trace.

(27) **NORM**—Sweep is initiated by the applied trigger signal. In the absence of an adequate trigger signal, there is no trace. When the trigger rate is too low for AUTO use NORM.

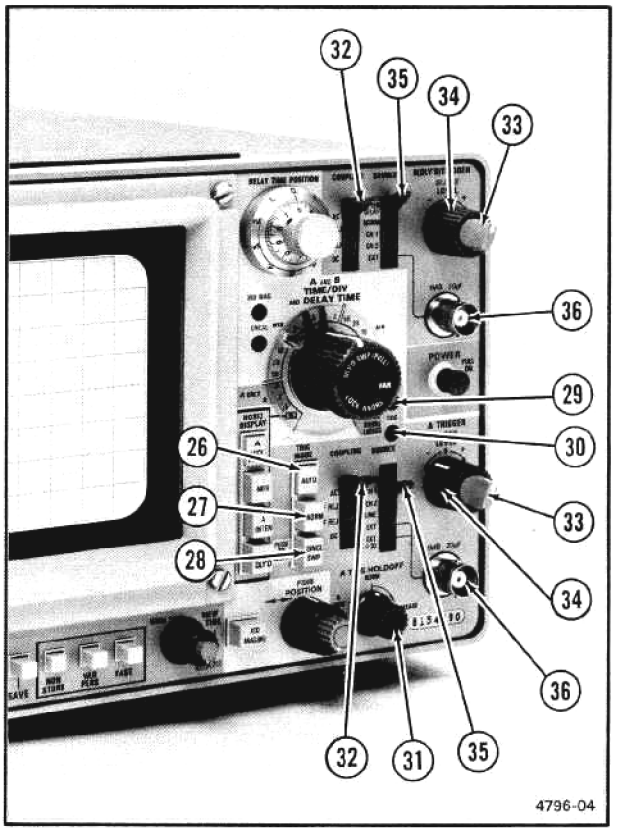

Fig. 2-4. Partial Trigger section.

http://manoman.sqhill.com

(28) **SINGL SWP**—When this pushbutton is pushed, the A Sweep operates in the single sweep mode. After a single sweep is displayed, further sweeps cannot be presented until the SINGL SWP button is pushed to reset the sweep. It is useful when the signal to be displayed is not repetitive or varies in amplitude, shape or time, causing an unstable conventional display. If the SINGL SWP button is pushed while in the FAST storage mode, multiple traces can be stored. See Storage Displays in this section.

(29) **READY Indicator**—Indicates A Sweep is "armed" and, upon receipt of an adequate trigger signal, will present a single-sweep display.

(30) **TRIG Indicator**—Indicates that A Sweep is triggered and will produce a stable display. It is useful for setting up the trigger circuits when a trigger signal is available without a display on the crt (for example, when using external triggers).

(31) **A TRIG HOLDOFF**—Provides continuous control of time between sweeps. Allows triggering on aperiodic signals (such as complex digital words). In the fully clockwise position (B ENDS A), A sweep is reset at the end of B sweep to provide the fastest possible sweep repetition rate for delayed-sweep presentations and low-repetition rate signals. Use the A trigger controls for the best possible display before using the A TRIG HOLDOFF control.

(32) **COUPLING**—Determines method used to couple signals to trigger generator circuit.

AC—Signals are capacitively coupled to the input of the trigger generator. Dc is rejected and signals below about 30 Hz are attenuated.

LF REJ—Signals are capacitively coupled to the input of the trigger circuit. Dc is rejected and signals below about 50 kHz are attenuated. It is useful for providing a stable display of the high-frequency components of a complex waveform.

HF REJ—Signals are capacitively coupled to the input of the trigger circuit. Dc is rejected and signals below about 30 Hz and above 50 kHz are attenuated. It is useful for providing a stable display of the low-frequency components of a complex waveform.

DC—All components of a trigger signal are coupled to the input of the trigger circuit. It is useful for providing a stable display of low-frequency or low-repetition rate signals, except the combination of ALT (dual trace) mode with the trigger SOURCE switch in NORM.

(33) **SLOPE**—Selects the slope of the trigger signal that starts the sweep.

+ (plus)—Sweep can be triggered from the positive-going portion of a trigger signal.

− (minus)—Sweep can be triggered from the negative-going portion of a trigger signal.

Correct SLOPE setting is important in obtaining a display when only a portion of a cycle is being displayed.

(34) **LEVEL**—Selects the amplitude point on the trigger signal at which the sweep is triggered. It is usually adjusted for the desired display after trigger SOURCE, COUPLING and SLOPE have been selected.

(35) **SOURCE**—Determines the source of the trigger signal coupled to the input of the trigger circuit.

NORM—Trigger source is displayed signal(s). It does not indicate time relationship between CH 1 and CH 2 signals. However, stable triggering of non-time related signals usually can be obtained by setting VERT MODE to ALT, SOURCE to NORM and COUPLING to LF REJ. Carefully adjust LEVEL for a stable display.

EXT—Signals connected to the External Trigger Input connectors are used for triggering. External signals must be time-related to the displayed signal for a stable display. It is useful when the internal signal is too small or contains undesired signals that could cause unstable triggering. It is useful when operating in CHOP mode.

EXT ÷ 10 (A Trigger circuit only)—External trigger signal attenuated by a factor of 10.

STARTS AFTER DELAY (B Trigger circuit only)—B Sweep runs immediately after the delay time selected by the DELAY-TIME POSITION dial.

CH 1—A sample of the signal available in Channel 1 is used as a trigger signal. CH 2 signal is unstable if it is not time-related.

http://manoman.sqhill.com

CH 2—A sample of the signal available in Channel 2 is used as a trigger signal. CH 1 signal is unstable if it is not time-related.

LINE (A Trigger circuit only)—A sample of the power-line frequency is used as a trigger signal. It is useful when input signal is time-related (multiple of sub-multiple) to the line frequency or when it is desirable to provide a stable display of a line-frequency component in a complex waveform.

(36) **EXTERNAL TRIGGER INPUT**—Input connector for external trigger signals.

HORIZONTAL AND POWER

See Fig. 2-5 for location of items 37 through 45.

(37) **FINE/POSITION**—Positions the display horizontally for A Sweep, B Sweep or the X-axis in X-Y Mode.

(38) **X10 MAG**—Increases displayed sweep rate by a factor of 10. It extends fastest sweep rate to 5 ns/division. The magnified sweep is the center division of the unmagnified display (0.5 division either side of the center graticule line).

(39) **HORIZ DISPLAY**—Determines mode of operation for horizontal deflection system.

A—Horizontal deflection provided by A Sweep at a sweep rate determined by the setting of the A TIME/DIV switch. B Sweep is inoperative.

MIX—First part of the horizontal sweep displayed at a rate set by the B TIME/DIV switch. Relative amounts of the display allocated to each of the two sweep rates are determined by the setting of the DELAY-TIME POSITION dial.

A INTEN—Sweep rate determined by the A TIME/DIV switch. An intensified portion appears on the display during the B Sweep time, which is about 10 times the B TIME/DIV switch setting. This switch position provides a check of the duration and position of the B Sweep (delayed sweep) with respect to the delaying sweep (A).

B DLYD—Sweep rate determined by the B TIME/DIV switch with the delay time determined by the setting of the DELAY TIME (A TIME/DIV) switch and the DELAY-TIME POSITION dial.

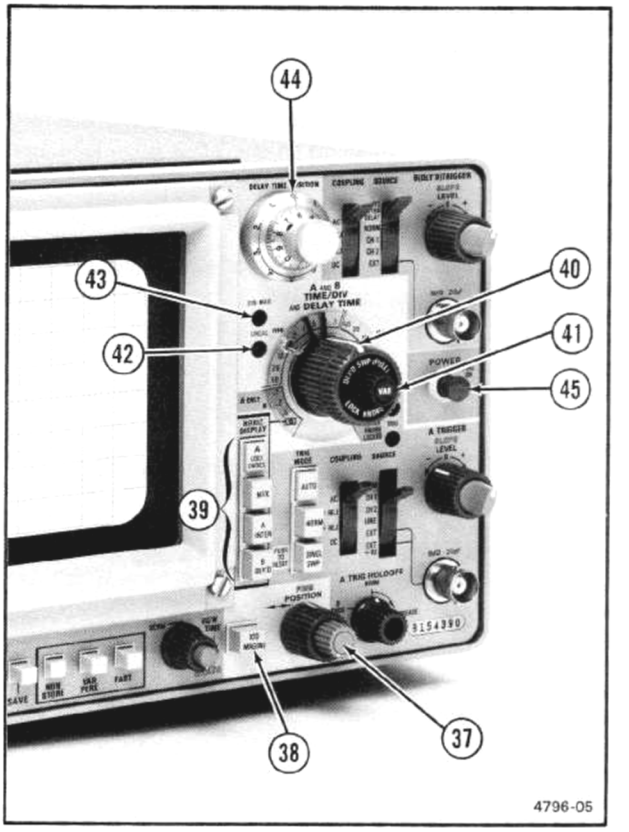

Fig. 2-5. Horizontal and Power sections.

(40) **A AND B TIME/DIV AND DELAY TIME**—A TIME/DIV switch (clear plastic skirt) selects the sweep rate of the A Sweep circuit for A Sweep only operation and selects the basic delay time (to be multiplied by DELAY TIME POSITION dial setting) for delayed sweep operation only. A VAR control must be in the calibrated detent for calibrated sweep rates. When both TIME/DIV switches are fully counterclockwise to the X-Y position, the horizontal (X-axis) display is the CH 1 input.

(41) **VAR**—Provides continuously variable sweep rates between the calibrated settings of the A TIME/DIV switch. It extends the slowest A Sweep rate to at least 1.25 s/division. The A Sweep rate is calibrated when the control is set fully clockwise to the calibrated detent.

(42) **UNCAL Indicator**—Indicates the A Sweep rate is uncalibrated (VAR control out of the calibrated detent).

http://manoman.sghill.com

(43) **X10 MAGnifier Indicator**—Indicates that the X10 magnifier is on.

(44) **DELAY-TIME POSITION**—Provides variable sweep delay from 0.20 to 10.20 times the delay time indicated by the A TIME/DIV switch.

(45) **POWER**—Turns instrument power on and off.

REAR PANEL

See Fig. 2-6 for location of items 46 through 54.

(46) **A +GATE**—Provides a positive-going rectangular pulse coincident with the A Sweep time, which can be used to trigger the signal source.

(47) **B +GATE**—Provides a positive-going rectangular pulse coincident with the B Sweep time, which can be used to trigger the signal source after a selected delay time, providing that A Sweep is triggered internally.

(48) **CH 1 VERT SIGNAL OUT**—Provides a sample of the signal applied to the CH 1 input connector.

(49) **EXT Z-AXIS**—Permits intensity modulation of the crt display. Does not affect display waveshape. Signals with fast rise and fall provide the most abrupt intensity change. Signal must be time-related to the display for a stable display. Useful for uncalibrated modes of operation and adding time markers.

(50) **CALIBRATOR**—A combination current loop/square-wave voltage output that permits the operator to compensate voltage probes and check vertical gain, current probes and oscilloscope operation. It is not intended to verify time-base calibration.

(51) **LINE FUSE HOLDER**—Contains the line fuse and the regulating range selector. See Fig. 2-1 for additional information.

(52) **REGULATING RANGE SELECTOR**—Shown in Medium regulating range. See Fig. 2-1 for additional information.

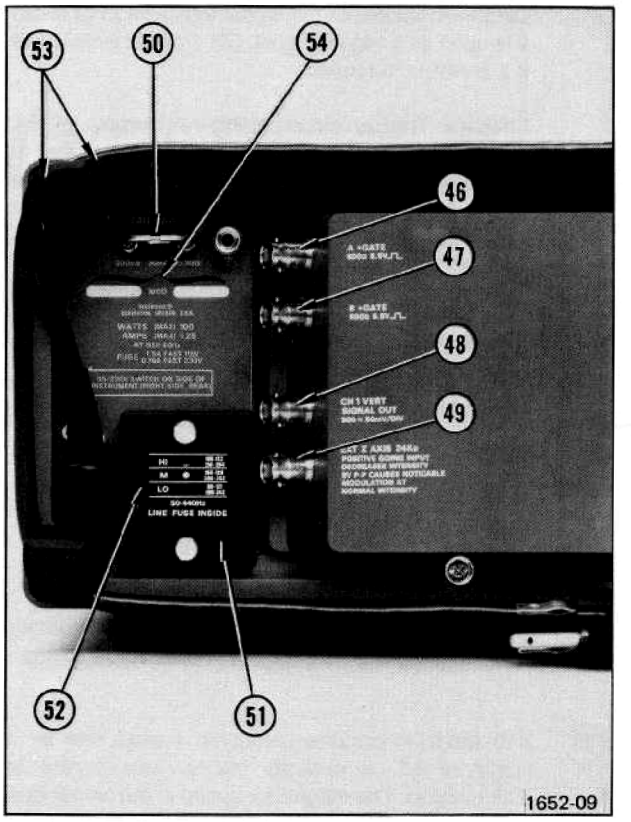

Fig. 2-6. Rear Panel section.

(53) **LINE CORD**—May be conveniently stored by wrapping it around the feet on the rear panel or the accessory pouch.

(54) **MOD Slots**—A number in either slot indicates the instrument contains an option.

RIGHT SIDE PANEL

55 **LINE VOLTAGE SELECTOR SWITCH (located on the right-hand side)**—Selects either 115 V or 230 V nominal line voltage.

LEFT SIDE PANEL

See Fig. 2-7 for location of items 56 and 57.

(56) **VERTICAL GAIN CONTROLS (accessible through left side panel)**—Screwdriver adjustments to set the gain of each vertical channel.

http://manoman.sghill.com

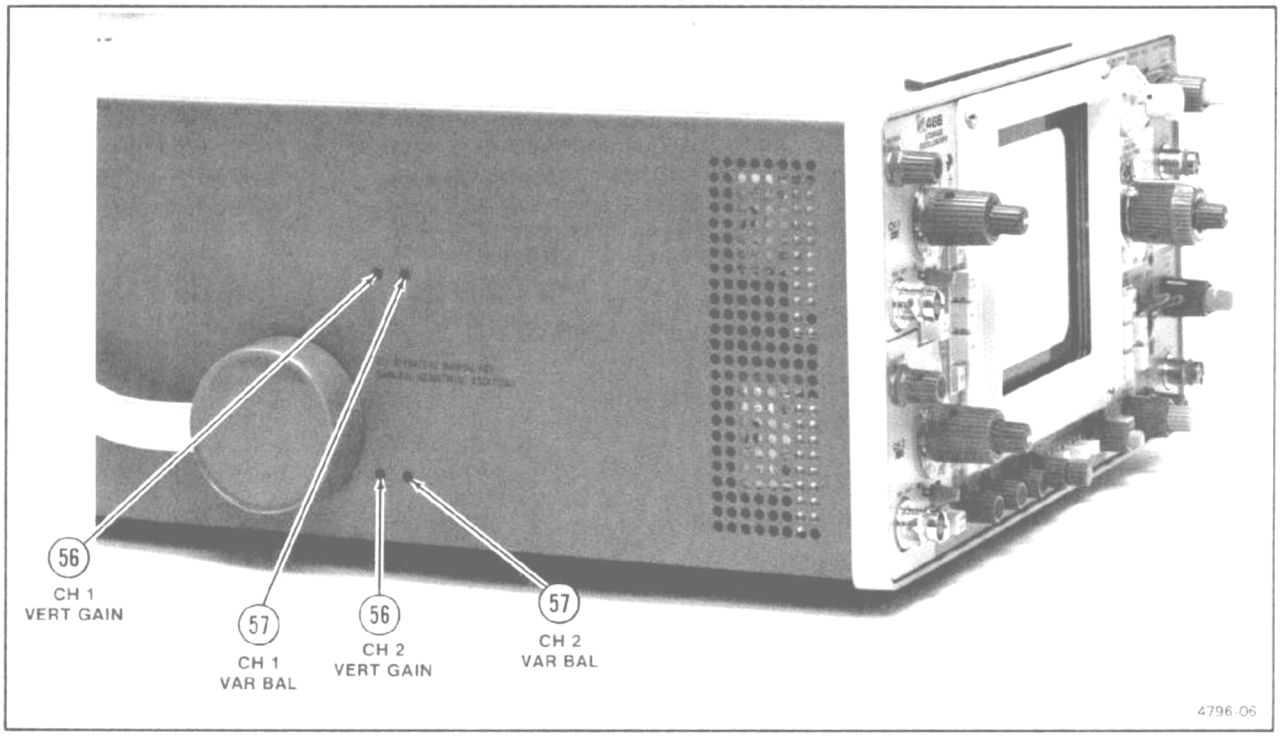

Fig. 2-7. Left Side Panel controls.

(57) **VARIABLE BALANCE CONTROLS (accessible through left side panel)**—Screwdriver adjustment to set balance of each vertical channel.

P6062B 10X — 1X PROBE

See Fig. 2-8 for the following probe items.

1. **10X — 1X SLIDE SWITCH**—Selects either 10X or 1X attenuation factor. The oscilloscope VOLTS/DIV readout reflects the change in attenuation.

2. **GND REFERENCE PUSHBUTTON**—Grounds the input of the vertical amplifier. The input signal is isolated from the ground by about 9 MΩ and 11 pF, in either 1X or 10X operation. Pushbutton must be completely depressed to obtain the ground reference.

3. **PROBE COMPENSATION ADJUSTMENT**—Permits adjusting an individual probe to the input variations between different oscilloscopes.

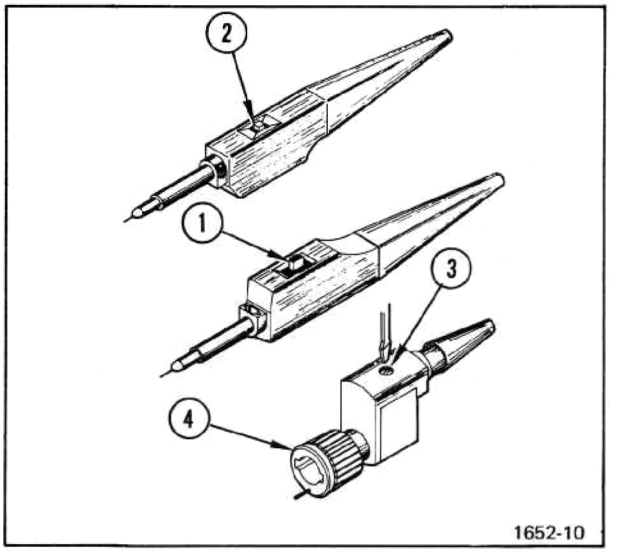

Fig. 2-8. P6062B Probe.

4. **READOUT CONNECTOR**—Permits scale switching of the VOLTS/DIV switch when the position of 10X — 1X slide switch is changed.

http://manoman.sqhill.com

OSCILLOSCOPE DISPLAYS

BASIC DISPLAYS

These instructions permit the operator to obtain the commonly used basic displays.

Normal Sweep Display

1. Set the controls as follows:

VERTICAL
(CH 1 and CH 2 if applicable)

VERT MODE	CH 1
VOLTS/DIV	Position determined by amplitude of signal to be applied
VOLTS/DIV VAR	Calibrated detent
Input Coupling	AC
Vertical POSITION	Midrange
20 MHz BW	Not limited (button out)
INVERT	Button out

DISPLAY

INTEN	Fully counterclockwise
REDUCED SCAN (PULL)	Pushed in
FOCUS	Midrange
SCALE ILLUM	Midrange
STORAGE LEVEL	NORM
SAVE INTEN	Fully counterclockwise
SAVE	Button out
NON STORE	Button in
VIEW TIME	NORM
VAR PERS	Button out
FAST	Button out
ERASE	Button out
BEAM FINDER	Button out
ASTIG	For well-defined display
TRACE ROTATION	To align trace with horizontal graticule line

TRIGGER

Trigger	(Both A and B if applicable)
SLOPE	+
LEVEL	0
SOURCE	NORM
COUPLING	AC
TRIG MODE (A only)	AUTO
A TRIG HOLDOFF	NORM

HORIZONTAL

TIME/DIV Switches	Locked together at 1 ms
A TIME/DIV VAR	Calibrated detent
HORIZ DISPLAY	A
X10 MAG	Off (button out)
POSITION/FINE	Midrange
DELAY-TIME POSITION	Fully counterclockwise

2. Pull the POWER switch (on) and allow several minutes for warmup. Connect the external signal to the CH 1 input connector.

3. Adjust the INTENSITY control for the desired display brightness. If the display is not visible with the INTENSITY control at midrange, press the BEAM FIND pushbutton and adjust the CH 1 VOLTS/DIV switch to reduce the vertical display size. Center the compressed display with the vertical and horizontal POSITION controls; release the BEAM FIND pushbutton. Adjust the FOCUS control for a well-defined display.

4. Set the CH 1 VOLTS/DIV switch and vertical POSITION control to locate the display within the display area.

5. Adjust the A Trigger LEVEL control for a stable display.

6. Set the A TIME/DIV switch and the horizontal POSITION control to locate the display within the display area.

Magnified Sweep Display

1. Obtain a Normal Sweep Display.

2. Adjust the horizontal POSITION control to move the area to be magnified to within the center graticule division. (It may be necesary to change the TIME/DIV switch setting.)

3. Push the X10 MAG switch (on) and adjust the horizontal POSITION control for precise positioning of the magnified display. Divide the TIME/DIV setting by 10 to determine the magnified sweep rate.

http://manoman.sghill.com

Delayed Sweep Display

1. Obtain a Normal Sweep Display.

2. Set the HORIZ DISPLAY switch to A INT and the B Trigger SOURCE switch to STARTS AFTER DELAY.

3. Pull out the B TIME/DIV switch knob and turn clockwise until the intensified zone on the display is the desired length. Adjust the INTENSITY control for the desired display brightness.

4. Adjust the DELAY-TIME POSITION dial to move the intensified zone to the portion of the display to be delayed.

5. Set the HORIZ DISPLAY switch to B DLY'D. The intensified zone on the display noted in steps 3 and 4 is now displayed in the delayed form (change INTENSITY setting as needed). The delayed sweep rate is indicated by the dot on the B TIME/DIV switch knob.

6. For a delayed sweep display with less jitter, set the B Trigger SOURCE switch to the same position as the A Trigger SOURCE switch and adjust the B Trigger LEVEL control for a stable display. If the A Trigger SOURCE switch is in the LINE position, a sample of the line voltage will have to be supplied to the B Trigger circuit externally via the B Trigger external trigger connector.

Mixed Sweep Display

1. Obtain a Normal Sweep Display.

2. Pull out the B TIME/DIV switch knob and turn clockwise to the desired sweep rate. Adjust the INTEN control for the desired display brightness.

3. Set the HORIZ DISPLAY switch to MIX. The display now contains more than one time factor on the horizontal axis. The first portion of the display is at the A Time Base sweep rate and the latter part is at the B Time Base sweep rate. The start of the B Time Base portion of the display can be changed by adjusting the DELAY-TIME POSITION control.

X-Y Display

1. Preset the instrument controls as given in step 1 of the Normal Sweep Display, then turn the instrument power on. Allow several minutes for instrument warmup.

2. Set the TIME/DIV switches to X-Y and the VERT MODE to CH 2. Apply the vertical signal to the CH 2 OR Y input connector and the horizontal signal to the CH 1 OR X input connector.

3. Advance the INTEN control until the display is visible. If the display is not visible with the INTEN control at midrange, press the BEAM FINDER pushbutton and adjust the CH 1 and CH 2 VOLTS/DIV switches until the display is reduced in size, both vertically and horizontally. Center the compressed display with the POSITION controls (CH 2 POSITION vertically, POSITION/FINE horizontally); release the BEAM FINDER pushbutton. Adjust the FOCUS control for a well-defined display.

Single Sweep Display

1. Obtain a Normal Sweep Display. (For random signals, set the trigger circuit to trigger on a signal that is approximately the same amplitude and frequency as the random signal.)

2. Set the A TRIG MODE switch to SINGL SWP and press the PUSH TO RESET button. The next trigger pulse starts the sweep and displays a single trace. If no triggers are present, the READY indicator lights, indicating the A Sweep Generator circuit is set and waiting to be triggered.

3. After the sweep is complete, the circuit is "locked out" and the READY indicator is out. Press the PUSH TO RESET button to prepare the circuit for another single-sweep display.

STORAGE DISPLAYS

Storage

1. Set the following controls:

VERTICAL

VERT MODE Switch	CH 1
VOLTS/DIV Switches	Determined by amplitude of applied signals
VOLTS/DIV VAR Controls	Calibrated detent
Input Coupling Switches	AC
Vertical POSITION Controls	Midrange
20 MHz BW Switch	Not limited (button out)
INVERT Switch	Button out

http://manoman.sqhill.com

DISPLAY

INTEN Control	Fully counterclockwise
REDUCED SCAN (PULL)	Push in
FOCUS Control	Midrange
SCALE ILLUM Control	Midrange
STORAGE LEVEL Control	NORM
SAVE INTEN Control	Fully counterclockwise
SAVE Switch	Button out
NON STORE Switch	Button in
VIEW TIME Control	NORM

TRIGGER
(Both A and B if applicable)

SLOPE Switch	+
LEVEL Control	0
SOURCE Switch	NORM
COUPLING Switch	AC
TRIG MODE Switch (A only)	AUTO
A TRIG HOLDOFF Control	NORM

HORIZONTAL

TIME/DIV Switches	Locked together at 1 ms
A TIME/DIV VAR	Calibrated detent
HORIZ DISPLAY Switch	A
X10 MAG Switch	Off (button out)
POSITION Control	Midrange

2. Obtain a Normal Sweep Display as follows:

3. Pull the POWER switch (on) and allow several minutes for instrument warmup. Connect the external signal to the CH 1 input connector.

4. Adjust the INTEN control for the desired display brightness. If the display is not visible with the INTEN control at midrange, press the BEAM FINDER pushbutton and adjust the CH 1 VOLTS/DIV switch to reduce the vertical display size. Center the compressed display with the vertical and horizontal POSITION controls; release the BEAM FINDER pushbutton. Adjust the FOCUS control for a well-defined display.

5. Set the CH 1 VOLTS/DIV switch and CH 1 POSITION CONTROL for a display that remains in the display area vertically.

6. Adjust the A Trigger LEVEL control for a stable display.

7. Set the A TIME/DIV switch and the horizontal POSITION control for a display that remains in the display area horizontally.

8. Select either VAR PERS or FAST mode.

NOTE

a. In general, better results are obtained using the VAR PERS mode for sweep speeds slower than 100 μs/division.

b. When using the combination of FAST storage and B DLY'D horizontal display, set A TRIG HOLDOFF control to B ENDS A for maximum display repetition rate.

9. Push the ERASE button. Allow a few seconds for the storage and trigger circuits to automatically provide a display.

10. Set the INTEN control for adequate display brightness. Set the STORAGE LEVEL control for optimum display (depends on the amplitude and speed of the signal to be viewed). Set the VIEW TIME control for the desired display retention (persistence) in the VAR PERS mode or for the time between erase cycles in the FAST mode.

11. Push the ERASE button. The display is erased, except in the SAVE mode, and the storage and trigger circuits are reset.

Save Storage

1. Obtain a Storage Display using steps 1 through 10.

2. Immediately after the event is stored, push in the SAVE button, providing a longer viewing time. The SAVE INTEN control adjusts the display brightness. Increasing the display brightness decreases the viewing time.

Pushing the SAVE button, after the event is stored, can be delayed up to several seconds (depending on the VIEW TIME setting); this reduces maximum viewing time.

Maximum viewing time occurs when the SAVE INTEN control is set fully counterclockwise, advancing the control only long enough to view the display.

3. Erase is disabled in the SAVE mode.

http://manoman.sghill.com

Save Random Events

1. Obtain a Storage Display using steps 1 through 10, with a test signal similar to a random event. Use the FAST mode, not VAR PERS. The FAST mode automatically disables the TRIG MODE switch and the instrument operates in a single sweep mode controlled by the storage circuitry. The READY indicator should light in the absence of a signal (random event or repetitive).

2. Set the SAVE INTEN control to maximum counterclockwise. Replace the test signal with the random event source. Push the ERASE button (or wait for the automatic erase cycle to occur). Note that the READY indicator is on. Push in the SAVE button before the random event occurs. After the event occurs and the READY indicator goes out, advance the SAVE INTEN control clockwise to view the stored display.

3. After the event is captured, the oscilloscope will automatically change to the SAVE mode.

Multiple-Trace Storage

1. Obtain a Storage Display using steps 1 through 10.

2. Immediately after an event is stored, press the SINGL SWP button. This will reset the sweep and the storage circuit (use the vertical or horizontal POSITION controls as desired to store successive traces on fresh crt display area). When the sweep is triggered, a new trace will be stored without erasing the previously stored display. Each time the SINGL SWP button is pressed, this cycle will be repeated until the stored traces are erased. A small amount of background will be stored each time a new trace is stored. This background can be kept to a minimum by setting the STORAGE LEVEL only as high as necessary for the particular application.

Care of Storage Screen

1. Use minimum beam intensity to produce a clear, well-defined display.

2. Use minimum SAVE INTEN control setting when storing a display for an extended period of time.

3. Avoid repeated use of the same area of the screen. If a particular display is being stored repeatedly, change the vertical position of the trace occasionally to use other portions of the display area.

PERFORMANCE CHECK

Purpose

The purpose of the performance check is for incoming inspection to determine the acceptability of newly purchased or recently recalibrated instruments. This procedure does not check every facet of the instrument calibration; rather, it is concerned primarily with those portions of the instrument essential to measurement accuracy and correct operation.

Recommended Equipment

All equipment is assumed to be calibrated and operating within the original specifications. The tolerances given in the performance check are for the oscilloscope under test and do not include test equipment errors.

In this procedure, test equipment is named by the functional description (see Table 2-3, Description), rather than by specific front-panel nomenclature.

The accessories listed are typical bench items.

More detailed information on test equipment and accessories is located at the start of Section 5, Calibration.

Display

Performance checks should be made with stable, well-focused, low-intensity display. Unless otherwise noted, adjust the Intensity, Astigmatism, Focus, Trigger Level, and Position controls as needed.

http://manoman.sqhill.com

Table 2-3
RECOMMENDED EQUIPMENT

Description	Minimum Specifications	Example
1. Test Oscilloscope with 10X probe (10X probe should have scale-factor switching, see step B1)	Bandwidth, DC to 2 MHz; minimum deflection factor, 5 mV/division; accuracy within 3%; dual trace.	a. TEKTRONIX 465B Oscilloscope with included (10X) probe. b. TEKTRONIX 475 Oscilloscope with included (10X) probe.
2. Amplitude Calibrator	Amplitude accuracy, within 0.25%; signal amplitude, 2 mV to 50 V; output signal, 1 kHz square wave.	TEKTRONIX PG 506 Calibration Generator.
3. Leveled Sine-wave Generator	Frequency, 350 kHz to above 100 MHz; output amplitude, variable from 0.5 to 5 V peak-to-peak; output impedance, 50 Ω; reference frequency, 50 to 350 kHz; amplitude accuracy, constant within 3% of reference frequency as output frequency changes.	TEKTRONIX SG 503 leveled Sine-Wave Generator.[a]
4. Time-Mark Generator	Marker outputs, 10 ns to 0.5 s; marker accuracy, within 0.1%; trigger output, 1 ms to 0.1 μs; time coincident with markers.	TEKTRONIX TG 501 Time-Mark Generator.[a]
5. Low Frequency Sine-Wave Generator	Frequency 10 Hz to 50 kHz; output amplitude, variable from 10 mV to 4 V peak-to-peak.	a. TEKTRONIX SG 502 Oscillator.[a] b. General Radio 1310A Oscillator.
6. 50 Ω Signal Pickoff	Frequency response, 50 kHz to 100 MHz; impedance 50 Ω for signal input, signal output and trigger output.	TEKTRONIX CT-3 signal pickoff. Part Number 017-0061-00.
7. Cable (2 required)	Impedance, 50 Ω; length, 42 inches; connectors, BNC.	
8. Cable (2 required)	Impedance, 50 Ω; length, 18 inches; connectors, BNC.	
9. Adapter	Connectors, GR874 to BNC female (required with CT-3).	
10. Adapter	Connectors, GR874 to BNC male.	
11. Adapter	Connectors, BNC female to BNC female.	
12. Dual Input Coupler (2 required)	Connectors, BNC female to 2 BNC male.	
13. T Connector	Connectors, BNC.	
14. 10X Attenuator (2 required)	Ratio, 10X; Impedance, 50 Ω; connectors, BNC.	
15. Termination (2 required)	Impedance, 50 Ω; connectors, BNC.	
16. Screwdriver	Length, three-inch shaft; bit size, 3/32 inch.	
17. Light Shield	Folding viewing hood.	

[a]**Requires a TM series power module.**

http://manoman.sqhill.com

A. PRELIMINARY PROCEDURE

1. Check that the Line Voltage Selector switch (located on side panel), indicates the correct nominal line voltage. The oscilloscope is shipped from the factory with this switch set for 115 VAC, unless otherwise specified. Verify this setting. If the line voltage is changed to 230 V line, the fuse should also be changed.

2. Set the Regulating Range Selector (located on the rear panel) to indicate the correct nominal line voltage range.

3. Set all 466 controls as specified for Normal Sweep Display under BASIC DISPLAYS in this section, except for the following:

INTEN	10 o'clock
NON STORE	Pushed in
REDUCED SCAN (PULL)	INTEN knob pushed in
CH 1 & CH 2 VOLTS/DIV	5 mV (fully clockwise)
CH 1 & CH 2 POSITION	Midrange
AC-GND-DC (both)	GND
20 MHz BW LIMIT	Full bandwidth (out)
VERT MODE	CH 1
INVERT	Normal (button out)
HORIZ DISPLAY	A
A and B TIME/DIV	1 ms (knobs locked)
TRIG MODE	AUTO
X10 MAG	Off (button out)

4. Connect the 466 to the correct line voltage source.

5. Pull POWER switch on. Within less than one minute, a baseline trace should appear within the display area. Allow at least 20 minutes warmup at an ambient temperature between +20°C and +30°C for checking instrument to accuracies specified.

6. Place hand over slotted hole at rear of instrument (fan plenum chamber) and check for a slight air exhaust. This verifies fan operation (fan speed varies with internal instrument temperature).

7. Adjust TRACE ROTATION control to make trace parallel to center horizontal line.

B. VERTICAL

1. Probe Indicator

a. Observe CH 1 VOLTS/DIV switch.

CHECK—LED is lit behind 5 mV.

b. Connect a 10X probe with a scale-factor switching connector to CH 1 input (if no scale-factor switching probe is available, an 11 kΩ resistor may be used. Touch the resistor between ground and the metal coding ring on the input connector.)

CHECK—5 mV LED is extinguished and 50 mV LED is on.

c. Set VERT MODE switch to CH 2 and move probe to CH 2 input.

CHECK—5 mV LED is extinguished and 50 mV LED is on.

d. Remove 10X probe.

CHECK—5 mV LED is on and 50 mV LED is extinguished.

2. Alternate Mode Operation

a. Set:

VERT MODE	ALT (CHOP/ALT: out)
A TRIGGER LEVEL	Fully clockwise

b. Position two traces about 2 divisions apart with CH 1 and CH 2 POSITION controls.

CHECK—Display alternates between vertical channels for all A TIME/DIV settings except X-Y (reduce intensity as needed at slower sweep speeds).

3. Chop Mode Operation

a. Set:

A TRIGGER SOURCE	NORM
A and B TIME/DIV	1 μs (knobs locked)
VAR TIME/DIV	Calibrated detent
VERT MODE	CHOP (CHOP/ALT: In)
A TRIGGER COUPLING	HF REJ

http://manoman.sqhill.com

b. Position two traces about 4 divisions apart and set A TRIGGER LEVEL control for a stable display.

CHECK—Vertical Switching transients are completely blanked between horizontal chopped segments.

CHECK—Duration of each cycle is approximately 4 divisions (exact measured duration is affected by instrument timing.

4. Beam Finder Operation

a. Push in BEAM FINDER button and hold.

CHECK—Trace remains visible and entirely on screen, regardless of the setting of vertical POSITION, horizontal POSITION, and/or INTENSITY controls.

CHECK—INTEN control has no effect on display intensity.

b. Release BEAM FINDER button.

5. CH 1 VAR VOLTS/DIV Balance and VAR Indicator

NOTE

If it is necessary to make the adjustments in steps 5 through 7, insulate all of the screwdriver shaft except the tip with electrical tape or spaghetti tubing.

a. Set VERT MODE switch to CH 1.

b. Position trace to center horizontal graticule line.

CHECK—CH 1 UNCAL LED is on when VAR control is out of detent.

CHECK—Trace shift of 1.0 div or less when rotating VAR control through its range.

ADJUST—CH 1 Var Bal (left side, through cabinet, see Fig. 2-7) for minimum trace shift while rotating CH 1 VAR control through its range.

c. Return CH 1 VAR control to detent position.

6. CH 2 VAR VOLTS/DIV Balance and VAR Indicator

a. Set VERT MODE switch to CH 2 and position trace to center horizontal line.

CHECK—CH 2 UNCAL indicator is on when VAR control is out of detent.

CHECK—Trace shift of 1.0 div or less when rotating VAR control through its range.

ADJUST—(CH 2 Var Bal) (left side, through cabinet, see Fig. 2-7) for minimum trace shift while rotating CH 2 VAR control through its range.

b. Return CH 2 VAR control to detent position.

7. CH 1 & CH 2 Deflection Accuracy

a. Set:

VERT MODE	CH 1
CH 1 AC-GND-DC	DC
A and B TIME/DIV	1 ms
A TRIGGER COUPLING	AC

b. Connect 20 mV signal from amplitude calibrator (Item 2 of Recommended Equipment) to CH 1 input via 50 Ω cable.

CHECK—Display is 4 div plus or minus 0.12 div.

ADJUST—CH 1 Gain Adj (left side, through cabinet, see Fig. 2-7) for 4 div display.

c. Change CH 1 VOLTS/DIV and amplitude calibrator settings as shown in Table 2-4.

CHECK—Display is either 4 div plus or minus 0.12 div or 5 div plus or minus 0.15 div.

d. Set amplitude calibrator for 20 mV and apply signal to CH 2.

e. Set:

VERT MODE	CH 2
CH 1 AC-GND-DC	GND
CH 2 AC-GND-DC	DC

http://manoman.sghill.com

Table 2-4
VERTICAL DEFLECTION ACCURACY

Volts/Div Setting	Amplitude Calibrator Signal	Deflection in Divisions For 3% Accuracy		Reading in Divisions
		Divisions	Accuracy	
10 m	50 mV	5	±0.15	4.85 to 5.15
20 m	0.1 V	5	±0.15	4.85 to 5.15
50 m	0.2 V	4	±0.12	3.88 to 4.12
.1	0.5 V	5	±0.15	4.85 to 5.15
.2	1 V	5	±0.15	4.85 to 5.15
.5	2 V	4	±0.12	3.88 to 4.12
1	5 V	5	±0.15	4.85 to 5.15
2	10 V	5	±0.15	4.85 to 5.15
5	20 V	4	±0.12	3.88 to 4.12

CHECK—Display is 4 div plus or minus 0.12 div.

ADJUST—CH 2 Gain Adj (left side, through cabinet, see Fig. 2-7) for 4 div display.

f. Change CH 2 VOLTS/DIV and amplitude calibrator settings as shown in Table 2-4.

CHECK—Display is either 4 div plus or minus 0.12 div or 5 div plus or minus 0.15 div.

8. Add Mode Operation

a. Set:

VOLTS/DIV (both)	5 mV
VERT MODE	ADD
CH 1 AC-GND-DC	DC

b. Set amplitude calibrator for 10 mV signal and connect signal to both inputs via 50 Ω cable and dual-input coupler.

CHECK—Display amplitude is approximately 4 div.

9. CH 2 Invert Operation

a. Press INVERT pushbutton.

CHECK—Display amplitude is approximately 0 div.

10. CH 1 and CH 2 Var VOLTS/DIV Range

a. Set:

VOLTS/DIV (both)	10 mV
VERT MODE	CH 1
INVERT	Normal (button out)

b. Set amplitude calibrator for a 5 division (50 mV) signal.

c. Rotate CH 1 VAR control fully counterclockwise.

CHECK—Display reduces to 2 div or less.

d. Set VERT MODE switch to CH 2.

e. Rotate CH 2 VAR control fully counterclockwise.

CHECK—Display reduces to 2 div or less.

f. Return both VAR controls to detent position and disconnect amplitude calibrator.

11. Bandwidth Limit Operation and Bandwidth

a. Set:

VOLTS/DIV (both)	5 mV
A TIME/DIV	.2 ms

b. Connect about 50 kHz reference signal from leveled sine-wave generator to CH 2 input via 10X attenuator and 50 Ω termination.

c. Adjust generator for 5 div display.

d. Depress 20 MHz BW LIMIT switch.

e. Increase generator output frequency until display is 3.5 div.

http://manoman.sqhill.com

CHECK—Generator output frequency is between 16 and 24 MHz.

f. Depress 20 MHz BW LIMIT switch again to restore 100 MHz bandwidth.

g. Set generator for 100 MHz output frequency.

CHECK—Display amplitude is 3.5 div or more.

h. Set generator for 50 kHz and repeat steps 11 parts c and g for 10 mV through 1 V positions of VOLTS/DIV switch (remove 10X attenuator as necessary to maintain the 5 div 50 kHz reference display).

i. Change VERT MODE to CH 1. Add 10X attenuator to test setup. Change test setup to CH 1 input.

j. Repeat steps 11 parts c and g for 5 mV through 1 V positions of VOLTS/DIV switch (remove 10X attenuator as necessary to maintain a 5 div 50 kHz reference display). Disconnect leveled sine-wave generator from CH 1 input.

12. Cascaded Gain and Bandwidth

a. Connect CH 1 VERT SIGNAL OUT (on rear panel) to CH 2 input via 50 Ω cable and 50 Ω termination. Connect amplitude calibrator to CH 1 input via 50 Ω cable.

b. Set:

VOLTS/DIV (both)	5 mV
VERT MODE	CH 2
A TIME/DIV	1 ms

c. Set amplitude calibrator for 5 mV output.

CHECK—Display is 5 div or more.

d. Disconnect test setup from CH 1 input.

e. Connect about 50 kHz reference signal from leveled sine-wave generator to CH 1 input via 50 Ω cable, 10X attenuator and 50 Ω termination.

f. Adjust generator for 5 div display.

g. Set generator for 50 MHz output frequency

CHECK—Display amplitude is 3.5 div or more.

h. Disconnect test setup.

C. TRIGGER

1. A Internal 25 MHz Triggering

a. Set:

VERT MODE	CH 1
CH 1 VOLTS/DIV	10 mV
CH 2 VOLTS/DIV	.1 V
POSITION (CH 1 and CH 2)	As needed
20 MHz BW LIMIT	Full bandwidth (out)
A and B TRIGGER COUPLING	AC
A and B TRIGGER LEVEL	Midrange
B (DLY'D) TRIGGER SOURCE	NORM
DELAY TIME POSITION	Fully counter-clockwise
A TRIGGER HOLDOFF	NORM
A and B TIME/DIV	.05 μs (knobs locked)
POSITION (Horiz)	Midrange
NON STORE	Button in
INTEN	As needed

b. Connect 25 MHz signal from leveled sine-wave generator to A and B External Trigger input via 50 Ω cable, GR-to-BNC female adapter, CT-3 thru output, GR-to-BNC male adapter, 10X attenuator, 50 Ω termination and dual-input coupler.

c. Connect CT-3 Sig Out 10% signal to CH 1 and CH 2 inputs via 50 Ω cable, 50 Ω termination, and dual-input coupler.

d. Set generator for 3 div (30 mV) display.

CHECK—TRIG LED is lit during stable display.

e. Set CH 1 VOLTS/DIV switch to .1 V (0.3 div display).

CHECK—Stable display, in both + and − positions of SLOPE switch for the following modes (adjust LEVEL control as needed):

http://manoman.sqhill.com

A TRIGGER

SOURCE	COUPLING
NORM	AC, DC
CH 1	AC
CH 2	AC

f. Set:

CH 1 VOLTS/DIV	10 mV
A TRIGGER COUPLING	LF REJ

g. Set leveled sine-wave generator for 5 div (50 mV) display.

h. Set CH 1 VOLTS/DIV switch to .1 V.

CHECK—Stable display, in both + and − positions of SLOPE switch for the following modes (adjust LEVEL control as needed):

A TRIGGER SOURCE

CH 2, CH 1 and NORM

i. Set:

A TRIGGER COUPLING	HF REJ
A TRIGGER SOURCE	NORM

CHECK—No stable display.

2. B Internal 25 MHz Triggering

a. Set:

HORIZ DISPLAY	B DLY'D
CH 2 VOLTS/DIV	.1 V
CH 1 VOLTS/DIV	10 mV
A TIME/DIV	.2 μs
B TIME/DIV	.05 μs
A & B TRIGGER COUPLING	AC

b. Set leveled sine-wave generator for 3 div (30 mV), 25 MHz display.

c. Set CH 1 VOLTS/DIV switch to .1 V (0.3 div).

CHECK—Stable display, in both + and − positions of SLOPE switch for the following modes (adjust LEVEL control as needed):

B TRIGGER

SOURCE	COUPLING
CH 2	AC, DC
CH 1	AC
NORM	AC

d. Set:

CH 1 VOLTS/DIV	10 mV
B TRIGGER COUPLING	LF REJ

e. Set leveled sine-wave generator for 5 div (50 mV) 25 MHz display.

f. Set:

CH 1 VOLTS/DIV	.1 V (0.5 div)
B TRIGGER SOURCE	NORM

CHECK—Stable display, with both + and − slope (adjust LEVEL control as needed).

g. Set:

B TRIGGER COUPLING	HF REJ
B TRIGGER SOURCE	NORM

h. CHECK—No stable display.

3. B External 25 MHz Triggering

a. Set:

VOLTS/DIV (both)	10 mV
TRIGGER COUPLING (both)	AC
SOURCE (both)	EXT
A TRIGGER LEVEL	Fully clockwise
B TRIGGER LEVEL	0

b. Set leveled sine-wave generator for 5 div (50 mV) display.

CHECK—Stable display, in both + and − positions of SLOPE switch for the following modes (adjust B LEVEL control as needed):

B TRIGGER COUPLING

AC, DC

http://manoman.sqhill.com

c. Set:

CH 1 VOLTS/DIV	20 mV
B TRIGGER COUPLING	LF REJ

d. Adjust leveled sine-wave generator for 5 div (100 mV) 25 MHz display.

CHECK—Stable display in both + and − positions of B TRIGGER SLOPE switch (adjust B LEVEL control as needed).

e. Set B TRIGGER COUPLING switch to HF REJ.

CHECK—No stable display.

4. A External 25 MHz Triggering

a. Set:

HORIZ DISPLAY	A
A TIME/DIV	.05 μs
CH 1 VOLTS/DIV	10 mV
A TRIGGER LEVEL	0

b. Set leveled sine-wave generator for 5 div (50 mV) display.

CHECK—Stable display, in both + and − positions of SLOPE switch for the following modes (adjust LEVEL control as needed):

A TRIGGER COUPLING

AC, DC

c. Set:

CH 1 VOLTS/DIV	20 mV
A TRIGGER COUPLING	LF REJ

d. Set leveled sine-wave generator for 5 div (100 mV) display.

CHECK—Stable display, in both + and − positions of SLOPE switch (adjust A TRIGGER LEVEL control as needed).

e. Set A TRIGGER COUPLING switch to HF REJ.

CHECK—No stable display.

f. Remove 10X attenuator from external trigger setup and change A TRIGGER SOURCE switch to EXT ÷ 10.

CHECK—No stable display.

g. Set A TRIGGER COUPLING switch to LF REJ.

CHECK—Stable display, in both + and − positions of SLOPE switch.

h. Set:

CH 1 VOLTS/DIV	10 mV
A TRIGGER COUPLING	AC

i. Set leveled sine-wave generator for 5 div (50 mV) 25 MHz display.

CHECK—Stable display, in both + and − positions of SLOPE switch for the following modes (adjust A TRIGGER LEVEL control as needed).

A TRIGGER COUPLING

AC, DC

j. Disconnect test setup.

5. A and B External 100 MHz Triggering

a. Set:

TRIGGER COUPLING (both)	AC
A TRIGGER SOURCE	EXT
CH 1 VOLTS/DIV	50 mV
A TIME/DIV	.05 μs

b. Connect 25 MHz signal from leveled sine-wave generator to A External trigger input via 50 Ω BNC cable, GR-to-BNC female adapter, CT-3 thru output, GR-to-BNC male adapter, 10X attenuator and 50 Ω termination.

c. Connect CT-3 Sig Out 10% signal to CH 1 input via 50 Ω BNC cable and 50 Ω termination.

d. Set leveled sine-wave generator for 3 div (150 mV) 25 MHz display, then change frequency to 100 MHz. Do not readjust signal amplitude.

http://manoman.sqhill.com

e. Push in X10 MAG (IN) button.

CHECK—Stable display, with 0.1 div or less jitter, in both + and − positions of SLOPE switch for the following modes (adjust A TRIGGER LEVEL control as needed):

A TRIGGER COUPLING

AC, DC

f. Remove 10X attenuator from External Trigger setup and change A TRIGGER SOURCE switch to EXT ÷ 10.

CHECK—Stable display, with 0.1 div or less jitter, in both + and − positions of SLOPE switch for the following modes (adjust LEVEL control as needed):

A TRIGGER COUPLING

AC, DC

g. Set leveled sine-wave generator for 6 div (300 mV) 25 MHz display, then change frequency to 100 MHz. Do not readjust signal amplitude.

h. Set A TRIGGER COUPLING switch to LF REJ.

CHECK—Stable display, with 0.1 div or less jitter, in both + and − positions of SLOPE switch (adjust LEVEL control as needed).

i. Set A TRIGGER COUPLING switch to HF REJ.

CHECK—No stable display.

j. Set:

HORIZ DISPLAY	B DLY'D
B TRIGGER MODE	LF REJ
B TRIGGER SOURCE	EXT

k. Add 10X attenuator to external trigger setup. Move leveled sine-wave generator signal to B External Trigger input.

CHECK—Stable display, with 0.1 div or less jitter, in both + and − positions of SLOPE switch (adjust LEVEL control as needed).

6. B Internal 100 MHz Triggering

a. Set:

VOLTS/DIV (both)	50 mV
TRIGGER SOURCE (both)	NORM
TRIGGER COUPLING (both)	AC
A TIME/DIV	.2 μs
B TIME/DIV	.05 μs

b. Connect CT-3 Sig Out 10% signal to CH 1 and CH 2 inputs via 50 Ω BNC cable, 50 Ω termination, and dual-input coupler. Adjust leveled sine-wave generator for 1.5 div, 100 MHz display.

CHECK—Stable display, with 0.1 div or less jitter, in both + and − positions of SLOPE switch for the following modes:

B TRIGGER

SOURCE	COUPLING
NORM	AC, LF REJ, DC
CH 1	DC
CH 2	DC

c. Set B TRIGGER COUPLING switch to HF REJ.

CHECK—No stable display.

7. Internal 100 MHz Triggering

a. Set:

HORIZ DISPLAY	A
A TIME/DIV	.05 μs

CHECK—Stable display, with 0.1 div or less jitter, in both + and − positions of SLOPE switch, for the following modes:

A TRIGGER

SOURCE	COUPLING
NORM	AC, LF REJ, DC
CH 1	DC
CH 2	DC

b. Set A TRIGGER COUPLING switch to HF REJ.

CHECK—No stable display.

c. Disconnect test equipment setup.

http://manoman.sqhill.com

8. A and B HF REJ Triggering

a. Set:

TIME/DIV (both)	10 μs
X10 MAG	Off (button out)
TRIGGER COUPLING (both)	HF REJ
CH 1 VOLTS/DIV	.1 V
CH 2 VOLTS/DIV	10 mV
VERT MODE	CH 2

b. Connect 50 kHz signal from leveled sine-wave generator to CH 1 and CH 2 inputs via 50 Ω BNC cable, 50 Ω termination and dual-input coupler.

c. Set generator for 5 div (50 mV) display in CH 2.

d. Set CH 2 VOLTS/DIV switch to .1 V. Adjust A TRIGGER LEVEL for stable display.

e. Set generator frequency for 1 MHz signal and push in X10 MAG (IN) button.

CHECK—No stable display with A TRIGGER SOURCE switch in NORM, CH 1 or CH 2.

f. Set:

A TRIGGER LEVEL	Fully clockwise
HORIZ DISPLAY	B DLY'D

CHECK—No stable display with B TRIGGER SOURCE switch in NORM, CH 1 or CH 2.

9. Single Sweep

a. Set:

A TRIGGER COUPLING	AC
SOURCE	NORM
LEVEL	0
HORIZ DISPLAY	A
VERT MODE	CH 1
X 10 MAG (IN)	Off (button out)

b. Set leveled sine-wave generator for 2 div, 50 kHz display and adjust A TRIGGER LEVEL control to have sweep start about 0.5 div away from the 0 LEVEL setting.

TIME/DIV (both)	10 ms

c. Set:

CH 1 AC-GND-DC	GND
TRIG MODE	SINGL SWP (push in)

CHECK—READY LED lights. If not, press SINGL SWP pushbutton again.

d. Set CH 1 AC-GND-DC switch to DC.

CHECK—A single sweep occurs and READY LED goes out.

e. Press SINGL SWP button.

CHECK—A single sweep occurs each time SINGL SWP button is pressed (increase intensity setting as needed).

f. Remove test setup.

10. 30 Hz Internal Triggering

a. Set:

TIME/DIV (both)	5 ms
A TRIG MODE	NORM
CH 1 VOLTS/DIV	10 mV

b. Connect 30 Hz low-frequency sine-wave generator signal to CH 1 input via 50 Ω cable, BNC T connector and 50 Ω termination. From BNC T connector, connect 50 Ω cable and 50 Ω termination to B EXT Input.

c. Set generator for 3 div (30 mV) display.

d. Set CH 1 VOLTS/DIV switch to .1 V.

CHECK—Stable display, in both + and − positions of SLOPE switch for the following modes (adjust A TRIGGER LEVEL control as needed):

A TRIGGER COUPLING

AC, DC

e. Set:

CH 1 VOLTS/DIV	10 mV
A TRIGGER COUPLING	HF REJ

http://manoman.sqhill.com

f. Set generator for 5 div (50 mV) 30 Hz display, then set CH 1 VOLTS/DIV switch to .1 V.

CHECK—Stable display, in both + and − positions of SLOPE switch (adjust A TRIGGER LEVEL control as needed.

g. Set A TRIGGER COUPLING switch to LF REJ, and CH 1 VOLTS/DIV to 10 mV.

CHECK—No stable trigger.

h. Set:

A TRIG MODE	AUTO
A LEVEL	Fully clockwise
A TIME/DIV	10 ms
B TIME/DIV	5 ms
B TRIGGER SOURCE	NORM
B TRIGGER COUPLING	HF REJ
HORIZ DISPLAY	B DLY'D
CH 1 VOLTS/DIV	.1 V

CHECK—Stable display, in both + and − positions of SLOPE switch (adjust B TRIGGER LEVEL control as needed).

i. Set:

B TRIGGER COUPLING	LF REJ
CH 1 VOLTS/DIV	10 mV

CHECK—No stable display.

j. Set:

B TRIG COUPLING	AC

k. Set generator for 3 div (30 mV) 30 Hz display.

l. Set CH 1 VOLTS/DIV switch to .1 V.

CHECK—Stable display, in both + and − positions of SLOPE switch for the following modes (adjust B TRIGGER LEVEL control as needed).

B TRIGGER COUPLING

AC, DC

11. 30 Hz External Triggering

a. Set:

B TRIGGER COUPLING	AC
CH 1 VOLTS/DIV	10 mV

b. Set generator for 5 div (50 mV) display.

c. Set B TRIGGER SOURCE switch to EXT.

CHECK—Stable display, in both + and − positions of SLOPE switch for the following modes (adjust LEVEL control as needed):

B TRIGGER COUPLING

AC, HF REJ, DC

d. Set B TRIGGER COUPLING switch to LF REJ.

CHECK—No stable display.

e. Move test setup from B EXT Input to A EXT Input.

f. Set:

HORIZ DISPLAY	A
A TRIG MODE	NORM
A TRIGGER COUPLING	AC
SOURCE	EXT
A TRIGGER LEVEL	0

CHECK—Stable display, in both + and − positions of A TRIGGER SLOPE switch for the following modes (adjust A TRIGGER LEVEL control as needed):

A TRIGGER COUPLING

AC, HF REJ, DC

g. Set A TRIGGER COUPLING switch to LF REJ.

CHECK—No stable display.

h. Disconnect test setup.

http://manoman.sqhill.com

12. Line Triggers

a. Set:

A TIME/DIV	5 ms
A TRIG MODE	AUTO
A TRIGGER SOURCE	LINE
SLOPE	+
CH 1 VOLTS/DIV	As needed
A TRIGGER COUPLING	AC

b. Connect 10X probe from CH 1 Input to a line-frequency source. Set CH 1 VOLTS/DIV switch as required.

CHECK—Stable display in both + and − positions of SLOPE switch.

c. Disconnect probe from line-frequency source, then from oscilloscope.

13. Trigger Level Range

a. Set:

TRIG COUPLING (both)	AC
TRIG SOURCE (both)	EXT
TRIGGER SLOPE (both)	+
CH 1 VOLTS/DIV	1 V
HORIZ DISPLAY	B DLY'D
TIME/DIV (both)	1 ms

b. Connect 1 kHz signal from low-frequency sine-wave generator to CH 1 input and B External Trigger input via 50 Ω cable, BNC T (to B External Input) and 50 Ω cable.

c. Adjust the generator for a 4 div display.

CHECK—Display is triggered along positive slope of waveform when B TRIGGER LEVEL control is rotated, but not triggered (trace disappears) at either extreme of rotation.

d. Set B TRIG SLOPE to −.

CHECK—Display is triggered along negative slope of waveform when B TRIGGER LEVEL control is rotated, but not triggered, at either extreme of rotation.

e. Move External Trigger signal to A External Input.

f. Set HORIZ DISPLAY to A.

CHECK—Display is triggered along positive slope of waveform when A TRIGGER LEVEL control is rotated, but not triggered (free-runs) at either extreme of rotation.

g. Set A TRIG SLOPE to −.

CHECK—Display is triggered along negative slope of waveform when the A TRIGGER LEVEL control is rotated, but not triggered (free-runs) at either extreme of rotation.

h. Set:

CH 1 VOLTS/DIV	5 V
CH 1 VAR VOLTS/DIV	Fully counter-clockwise
A TRIG SOURCE	EXT ÷ 10
A TRIG COUPLING	AC

i. Disconnect low-frequency sine-wave generator signal and connect 50 V signal from amplitude calibrator to the CH 1 input and the A External Trigger input, via a 50 Ω cable, a BNC T, and a 50 Ω cable.

CHECK—Display is triggered along negative slope of waveform when A TRIG LEVEL control is rotated. (Note: The applied signal is 50 V peak-to-peak. The range of the A LEVEL control is only ±20, or 40 V peak-to-peak, or greater; therefore, untriggered operation at either extreme of rotation is not required.)

j. Set A TRIG SLOPE to +.

CHECK—Display is triggered along positive slope of waveform when A TRIG LEVEL control is rotated.

14. Check Function of Trigger View

a. Set instrument controls and make test setup as follows.

b. CHECK—That a signal of about 2 divisions amplitude can be brought on screen by moving the A TRIGGER LEVEL control.

c. Move the A TRIGGER SOURCE control to EXT ÷ 10.

http://manoman.sqhill.com

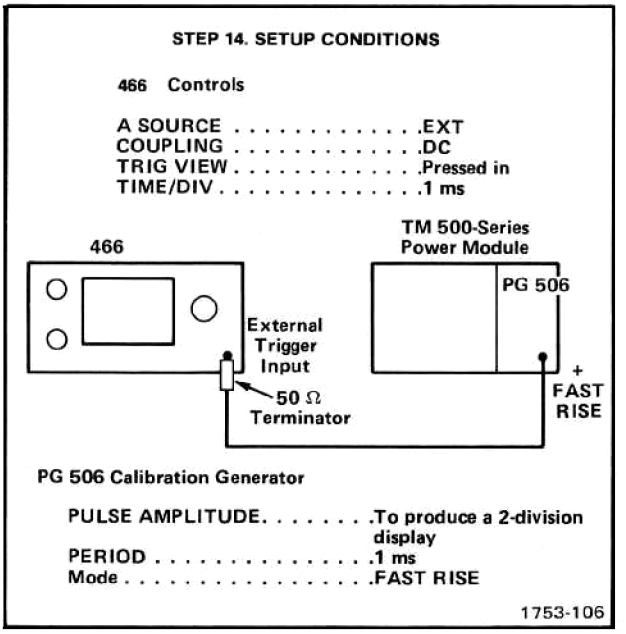

d. Set the Pulse Amplitude control on the PG 506 to produce a 2-division display.

e. CHECK—The performance of the Trigger View in EXT ÷ 10 by repeating part b.

15. Check Combination of Trigger View and Vertical Displays

a. Set instrument controls and make test setup as follows.

b. Set signal generator frequency to 40 MHz and amplitude to produce a 2-division Trigger View display. The A TRIGGER LEVEL control will vertically move the Trigger View display.

c. CHECK—That the input to Channel 1 can be displayed simultaneously with the Trigger View display.

d. Move the input cable from the CH 1 input to the CH 2 input.

e. Press in the CH 2 button and release the CH 1 button.

f. CHECK—That the input to Channel 2 can be displayed simultaneously with the Trigger View display.

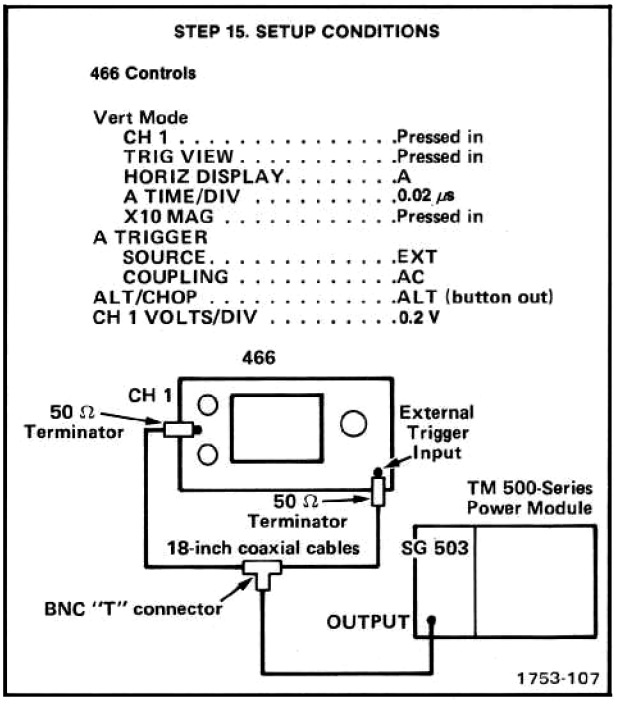

g. Press in the ADD and CH 1 buttons.

h. CHECK—That Channel 1, Channel 2, Add, and Trigger View can be displayed simultaneously. The display should be:

Channel 1	A trace with no vertical deflection.
Channel 2	A 2-division signal.
Add	A 2-division signal.
Trigger View	A 2-division signal.

i. Disconnect the 18-inch cable from the CH 2 input connector.

j. Connect the dual-input coupler to the CH 1 and CH 2 input connectors.

k. Connect the 18-inch coaxial cable from the T-connector to the input of the dual-input coupler.

l. Press in the CH 1, CH 2, and ADD VERT MODE buttons.

m. CHECK—That four displays are present—Channel 1, Channel 2, Add, and Trigger View.

http://manoman.sqhill.com

n. Move the A TRIGGER SOURCE control to EXT ÷ 10.

o. Adjust the amplitude of the signal generator to produce displays of about 2 divisions on the crt.

p. CHECK—The performance of the 466 in Ext ÷ 10 by repeating parts c through m.

q. Press in the CHOP button.

r. CHECK—The performance of the 466 in Ext ÷ 10 Trigger Source and Chop mode by repeating steps c through m.

s. Move the A TRIGGER SOURCE control to EXT.

t. CHECK—The performance of the 466 in Ext Trigger Source and Chop mode by repeating parts c through m.

16. Check Deflection Factor of Trigger View Signal

a. Set instrument controls and make test setup as follows.

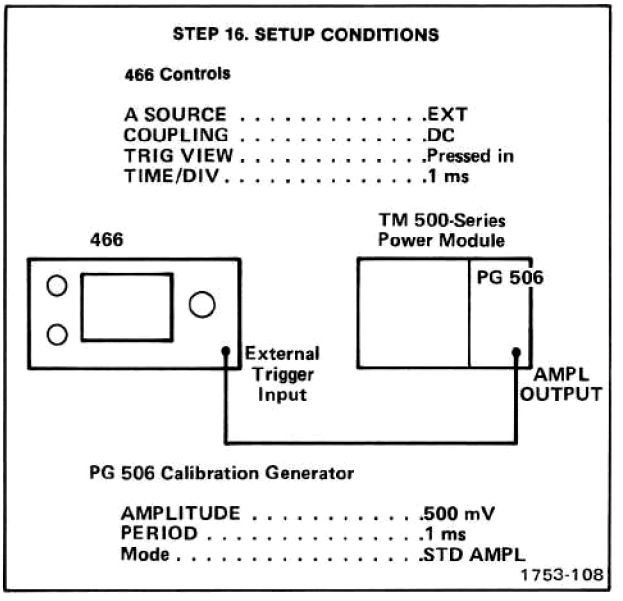

b. CHECK—That the displayed signal is 5 divisions ±5% in amplitude (4.75 to 5.25 divisions).

c. CHECK—That the display can be positioned by rotating the A TRIGGER LEVEL control.

d. Move the A TRIGGER SOURCE control on the 466 to EXT ÷ 10.

e. Set the Amplitude control on the PG 506 to 5 V.

f. CHECK—That the displayed signal is 5 divisions ±5% in amplitude (4.75 to 5.25 divisions).

g. CHECK—The performance on the 466 in Ext ÷ 10 Trigger Source by repeating part c.

D. DM-SERIES DIGITAL MULTIMETERS

Oscilloscopes with Digital Multimeters attached, refer to the Digital Multimeter manual at this point.

Oscilloscopes without Digital Multimeters, continue to portion E, HORIZONTAL of performance check in Operating Instructions section.

E. HORIZONTAL

1. Differential Time Linearity

a. Set:

CH 1 & CH 2 VOLTS/DIV	.5 V
CH 1 & CH 2 VOLTS/DIV	Calibrated detent
A TRIGGER SOURCE	NORM
B TRIGGER SLOPE	+
B (DLY'D) TRIGGER SOURCE	STARTS AFTER DELAY
HORIZ DISPLAY	A INTEN
A TIME/DIV	1 ms
B TIME/DIV	5 μs
DELAY TIME POSITION (DTP)	1.00
X10 MAG	Off (button out)

b. Connect 1 ms time marks from the time-mark generator to CH 1 input via 50 Ω cable and 50 Ω termination. With the DTP control set at 1.00, check that the 2nd time mark is intensified (adjust INTEN as necessary to view the intensified time mark).

c. Set the HORIZ DISPLAY to B DLY'D and increase INTEN as necessary to view the time mark. Set Horizontal POSITION so start of sweep is within graticule area.

http://manoman.sqhill.com

d. Use DTP to set second time-mark start to sweep start and note DTP reading (1.00 within 1 minor div, 0.99 to 1.01).

CHECK—Each successive time mark. See Table 2-5.

Table 2-5
DIFFERENTIAL TIME ACCURACY

Time Mark	DTP Setting		
3	1.98		2.02
4	2.97		3.03
5	3.96		4.04
6	4.95		5.05
7	5.94	to	6.06
8	6.93		7.07
9	7.92		8.08
10	8.91		9.09
11	9.90		10.10

2. Horizontal Gain and Sweep Linearity

a. Set HORIZ DISPLAY switch to A and horizontally position 1st time mark to left edge graticule line.

CHECK—1 time mark/div, within 2% (±0.2 div for 11th mark).

CHECK—Linearity over any 2 div portion of sweep is within 5% of accurate timing (±0.1 div).

b. Push in X10 MAG (IN) button and horizontally position 1st time mark to graticule center line.

c. Release X10 MAG (IN) button.

CHECK—1st time mark should be near graticule center line, then position 1st time mark to left edge graticule line.

d. Set time-mark generator to 0.1 ms time marks.

e. Push in X10 MAG (IN) button and position nearest time mark to left edge graticule line.

CHECK—X10 MAG LED is on when X10 MAG (IN) button is in.

CHECK—1 time mark/div, within 3% (±0.3 div for 11th mark).

CHECK—Sweep accuracy over any 2 div portion of magnified sweep should be within 0.1 div (5%).

f. Release X10 MAG (IN) button.

3. VAR TIME/DIV Range

a. Set:

TIME/DIV (both)	2 ms
VAR TIME/DIV	Fully counter-clockwise

b. Set time-mark generator for 5 ms time marks.

CHECK—UNCAL LED lights when VAR TIME/DIV control is out of detent.

CHECK—1 or more time mark/div.

c. Set VAR TIME/DIV control to detent (calibrated).

4. B TIME/DIV Accuracy

a. Set:

DELAY TIME POSITION	Fully counter-clockwise
HORIZ DISPLAY	B DLY'D
B TRIGGER SOURCE	NORM
B TIME/DIV	.05 μs
A TIME/DIV	.5 μs
LEVEL (both)	For triggered display
INTEN	As required

b. Set time-mark generator for 50 ns time marks.

CHECK—B Time/Div accuracy using control settings given in Table 2-6, over first 10 div of display. 1 time mark/div within 2% (±0.2 div for 11th mark).

http://manoman.sqhill.com

Table 2-6
B TIMING ACCURACY

A and B TIME/DIV Switch Setting		Time-Mark Generator Output
A	B	
.5 μs	.05 μs	50 nanosecond
.5 μs	.1 μs	0.1 microsecond
.5 μs	.2 μs	0.2 microsecond
1 μs	.5 μs	0.5 microsecond
2 μs	1 μs	1 microsecond
5 μs	2 μs	2 microsecond
10 μs	5 μs	5 microsecond
20 μs	10 μs	10 microsecond
50 μs	20 μs	20 microsecond
.1 ms	50 μs	50 microsecond
.2 ms	.1 ms	0.1 millisecond
.5 ms	.2 ms	0.2 millisecond
1 ms	.5 μs	0.5 millisecond
2 ms	1 ms	1 millisecond
5 ms	2 ms	2 millisecond
10 ms	5 ms	5 millisecond
20 ms	10 ms	10 millisecond
50 ms[a]	20 ms	20 millisecond
.1 s[a]	50 ms	50 millisecond

[a]Change A TRIG MODE to NORM if needed.

Table 2-7
A TIMING ACCURACY

A TIME/DIV Switch Setting	Time-Mark Generator Output
.05 μs	50 nanosecond
.1 μs	0.1 microsecond
.2 μs	0.2 microsecond
.5 μs	0.5 microsecond
1 μs	1 microsecond
2 μs	2 microsecond
5 μs	5 microsecond
10 μs	10 microsecond
20 μs	20 microsecond
50 μs	50 microsecond
.1 ms	0.1 millisecond
.2 ms	0.2 millisecond
.5 μs	0.5 millisecond
1 ms	1 millisecond
2 ms	2 millisecond
5 ms	5 millisecond
10 ms	10 millisecond
20 ms	20 millisecond
50 ms	50 millisecond
.1 s[a]	0.1 second
.2 s[a]	0.2 second
.5 s[a]	0.5 second

[a]Change A TRIG MODE to NORM and reduce intensity if needed.

5. A TIME/DIV Accuracy

a. Set:

HORIZ DISPLAY	A
TIME/DIV (both)	.05 μs
TRIG MODE	AUTO

b. Set time-mark generator for 50 ns time marks.

CHECK—A TIME/DIV accuracy using control settings given in Table 2-7, over first 10 div of display. One time mark/div, within 2% (±0.2 div for 11th mark).

6. A Magnified Accuracy

a. Set time-mark generator for 10 ns time marks.

b. Set:

A TRIG MODE	AUTO
A TIME/DIV	.05 μs
X10 MAG (IN)	On (button in)

CHECK—One time mark/2 div, within 3% (±0.3 div for 6th mark). This applies to the full sweep length, excluding the first and last 10 divisions of magnified sweep length.

http://manoman.sqhill.com

CHECK—A TIME/DIV magnified accuracy using control settings given in Table 2-8. One time mark/div, within 3% (±0.3 div for 11th mark). Exclude portions of the sweep as indicated.

7. B Magnified Accuracy

a. Set:

HORIZ DISPLAY	B DLY'D
A TRIG MODE	AUTO
A TIME/DIV	.2 μs
B TIME/DIV	.05 μs

b. Set time-mark generator for 10 ns time marks. Set INTEN and both LEVEL controls as necessary to view display.

CHECK—One time mark/2 div, within 3% (6th mark aligns with 10th graticule line ±0.3 div). This applies to the full sweep length, excluding the first and last 10 divisions of magnified sweep length.

CHECK—B TIME/DIV accuracy using control settings given in Table 2-8. One time-mark/div, within 3% (±0.3 div for 11th mark). Exclude portions of the sweep as indicated.

Table 2-8
A AND B MAGNIFIED ACCURACY

A and B TIME/DIV Switch Setting	Time-Mark Generator Output	Portions of Total Magnified Sweep Length to Exclude from Measurement
0.5 μs	10 nanosecond	First and last 10 divisions
.1 μs	10 nanosecond	First and last 5 divisions
.2 μs	20 nanosecond	First and last 2 1/2 divisions
.5 μs	50 nanosecond	
1 μs	0.1 microsecond	
2 μs	0.2 microsecond	
5 μs	0.5 microsecond	
10 μs	1 microsecond	
20 μs	2 microsecond	
50 μs	5 microsecond	
.1 ms	10 microsecond	
.2 ms	20 microsecond	
.5 ms	50 microsecond	
1 ms	0.1 millisecond	
2 ms	0.2 millisecond	
5 ms	0.5 millisecond	
10 ms	1 millisecond	
20 ms[a]	2 millisecond	
50 ms[a]	5 millisecond	
A SWEEP ONLY		
.1 s[a]	10 millisecond	
.2 s[a]	20 millisecond	
.5 s[a]	50 millisecond	

[a]Change A TRIG MODE to NORM as needed.

http://manoman.sqhill.com

8. Differential Time Accuracy

a. Set time-mark generator for 0.1 μs time marks.

b. Set:

X10 MAG (IN)	Off (button out)
B TRIGGER SOURCE	STARTS AFTER DELAY
A TIME/DIV	.2 μs
B TIME/DIV	.05 μs
DELAY TIME POSITION	1.50

c. Horizontally position 1st displayed marker to center vertical graticule line.

d. Set DTP control to 8.50, then move DTP control to position 1st displayed marker to center vertical line.

CHECK—DTP reading is 8.50 ±0.05 (8.45 to 8.55).

e. Set time-mark generator for .5 μs time marks.

f. Set:

DELAY TIME POSITION	1.50
A TIME/DIV	.5 μs

g. Position displayed marker to center vertical line.

h. Set DTP control to 8.50, then move DTP control to position displayed marker to center vertical line.

CHECK—DTP reading is 8.50 ±0.05 (8.45 to 8.55).

CHECK—Delayed sweep accuracy using control settings given in Table 2-9. Use 1.00 for 1st DTP setting and 9.00 for 2nd setting. If 1st time-mark start is not visible, use 2nd time-mark. Final DTP setting is 9.00 ±0.08 (8.92 to 9.08).

Table 2-9
DIFFERENTIAL TIME ACCURACY

Time-Mark Generator Output	A TIME/DIV Switch Setting	B TIME/DIV Switch Setting	DTP Setting
1 microsecond	1 μs	.1 μs	8.92 to 9.08 (+15°C to +35°C) or 8.80 to 9.20 (−15°C to +55°C)
2 microsecond	2 μs	.2 μs	
5 microsecond	5 μs	.5 μs	
10 microsecond	10 μs	1 μs	
20 microsecond	20 μs	2 μs	
50 microsecond	50 μs	5 μs	
.1 millisecond	.1 ms	10 μs	
.2 millisecond	.2 ms	20 μs	
.5 millisecond	.5 ms	50 μs	
1 millisecond	1 ms	.1 μs	
2 millisecond	2 ms	.2 μs	
5 millisecond	5 ms	.5 μs	
10 millisecond	10 ms	1 ms	
20 millisecond	20 ms[a]	2 ms	
50 millisecond	50 ms[a]	5 ms	
.1 second	.1 s[a]	10 ms	
.2 second	.2 s[a]	20 ms	
.5 second	.5 s[a]	50 ms	

[a]Change A TRIG MODE to NORM.

http://manoman.sqhill.com

9. Delay Time Jitter

a. Set time-mark generator for 1 ms time marks.

b. Set:

DELAY TIME POSITION	1.00
HORIZ DISPLAY	B DLY'D
A TRIG MODE	AUTO
X10 MAG (IN)	Off (out)
A TIME/DIV	1 ms
B TIME/DIV	.2 μs
B TRIGGER SOURCE	STARTS AFTER DELAY

c. Attach light shield to graticule housing.

CALIBRATION AID—The low repetition rate of this check makes viewing difficult. Additional intensity may be obtained by using storage.

Push in VAR PERS button and adjust INTEN, STORAGE LEVEL and VIEW TIME for a usable trace.

d. Set DTP control to position time mark to graticule center.

CHECK—Jitter is 1 div or less (60 Hz power line) or 2.5 div or less (50 Hz power line).

e. Set DTP control to about 9.00 to position time mark to graticule center.

CHECK—Jitter is 1 div or less (60 Hz power line) or 2.5 div or less (50 Hz power line).

f. Push in NON STORE button and remove light shield.

10. Mixed Sweep Accuracy

NOTE

The following portions of MIXED SWEEP mode are excluded: (1) The first 0.5 div after display start, (2) The first 0.2 div or 0.1 μs, whichever is greater, after the transition from A Sweep to B Sweep.

a. Set:

DELAY TIME POSITION	Fully counter-clockwise
B TRIGGER SOURCE	NORM
B TRIGGER LEVEL	Fully counter-clockwise (untriggered)
HORIZ DISPLAY	A
A TIME/DIV	1 ms
B TIME/DIV	.5 ms

b. Horizontally position 2nd time mark to left-hand graticule line and note A Sweep timing accuracy over 9 div.

c. Change HORIZ DISPLAY control to MIX and position 2nd time mark to left-hand graticule line.

CHECK—A Sweep accuracy is within 2% of accuracy noted in step b.

d. Set B TRIGGER SOURCE switch to STARTS AFTER DELAY and position 2nd marker to 2nd graticule line (1st mark goes off screen).

CHECK—B Sweep accuracy is within 2% (7.84 to 8.16 for 8 div display).

e. Set time-mark generator for 0.2 μs markers.

f. Set:

B TRIGGER SOURCE	NORM
HORIZ DISPLAY	A
A TIME/DIV	.2 μs
B TIME/DIV	.1 μs

g. Horizontally position 2nd time mark to left-hand graticule line and note A Sweep timing accuracy over 9 div.

h. Change HORIZ DISPLAY control to MIX and position 2nd time mark to left-hand graticule line.

i. Set B TRIGGER SOURCE switch to STARTS AFTER DELAY and position 2nd marker to second graticule line (1st mark goes off screen).

CHECK—B Sweep accuracy is within 2% (7.84 to 8.16 for centered 8 div display).

j. Disconnect time-mark generator.

http://manoman.sqhill.com

11. B Ends A Operation

a. Set:

HORIZ DISPLAY	A INTEN
A TIME/DIV	1 ms
B TIME/DIV	.1 ms
B TRIG MODE	STARTS AFTER DELAY
A TRIG HOLDOFF	B ENDS A (clockwise detent)
DELAY TIME POSITION	About 2.00
INTEN	A Sweep is visible

b. Rotate DELAY TIME POSITION control through its range.

CHECK—End of A Sweep does not extend beyond B intensified portion at any DTP setting.

12. A Trigger Holdoff

a. Set:

HORIZ DISPLAY	A
A TIME/DIV	10 μs
A TRIG HOLDOFF	NORM (fully counterclockwise)
A LEVEL	Fully clockwise

b. Set test oscilloscope:

Vertical mode	Channel 1
Channel 1 Volts/Div	1 volt
Horiz mode	A Sweep
A Trig mode	Auto
Time/Div	2 μs

c. Connect test oscilloscope CH 1 input to +A GATE Output (on oscilloscope being calibrated) via 50 Ω cable.

d. Adjust test oscilloscope Level for triggered display and Var Time/Div so negative portion of gate (holdoff time) is 1 div long. Adjust triggering and Position so negative gate starts at left edge graticule line on test oscilloscope.

e. Rotate A TRIG HOLDOFF control clockwise, but not into B ENDS A detent.

CHECK—Holdoff time of A GATE is increased 10 times or more.

f. Set the A TRIG HOLDOFF control to NORM.

F. REDUCED SCAN AND STORAGE

1. Reduced Scan

a. Set:

INTEN	As needed
REDUCED SCAN (PULL)	INTEN knob (pushed in)
VERT MODE	CH 1
CH 1 VOLTS/DIV	.1 V
CH 1 VAR VOLTS/DIV	Calibrated dentent
AC-GND-DC (CH 1)	GND
NON STORE	On (button in)
STORAGE LEVEL	MAX (fully clockwise)
INTEN (SAVE)	MAX (fully clockwise)
SAVE	Off (button out)
VIEW TIME	MAX (fully clockwise and in detent)
A TRIGGER COUPLING	AC
A TRIGGER SOURCE	NORM
A TRIG LEVEL	0
TRIG MODE	AUTO
HORIZ DISPLAY	A
A TIME/DIV	1 ms
B TIME/DIV	1 ms
VAR TIME/DIV	Calibrated detent
X10 MAG	Off (button out)

NOTE

All measurements and readings in this step are referenced to the small graticule in the crt center screen unless otherwise stated.

b. Adjust TRACE ROTATION for trace parallel to horizontal graticule line.

c. Pull INTENSITY control for Reduced Scan mode.

CHECK—REDUCED SCAN LED lights when INTENSITY knob is pulled out.

CHECK—Trace is parallel to center horizontal graticule line.

d. Connect 0.1 ms time marks from time-mark generator to CH 1 input via 50 Ω cable and 50 Ω termination.

http://manoman.sqhill.com

e. Set:

X10 MAG (IN)	On (push in)
CH 1 AC-GND-DC	DC

CHECK—1 time mark/small div, within 2% (±0.2 div for 11th mark). Adjust INTEN and POSITION controls as required.

f. Vertically position display baseline 2 large div below center line (bottom line of reduced graticule) and horizontally position a time mark to center vertical graticule line.

CHECK—Time mark is parallel to center vertical graticule line.

g. Set:

X10 MAG (IN)	Off (button out)
INTEN	Full Scan (push in)
CH 1 VOLTS/DIV	.5

Set time-mark generator for 1 ms time marks and adjust INTEN, FOCUS and ASTIG controls for best focused display.

h. Set:

INTEN	Reduced Scan (pull out)
CH 1 VOLTS/DIV	.2

CHECK—Display can be focused by adjusting FOCUS control only.

ADJUST—FOCUS for best focused display.

i. Disconnect time mark generator.

j. Connect 20 mV signal from amplitude calibrator to CH 1 input via 50 Ω cable.

k. Set CH 1 VOLTS/DIV swich to 5 mV.

CHECK—Display is 4 small div within 3% (±0.12 div).

l. Disconnect amplitude calibrator.

2. VAR PERS (Variable Persistence)

a. Set:

Storage Mode	VAR PERS (push in)
INTEN	Minimum (fully counterclockwise), push INTEN in (full scan)
STORAGE LEVEL	MAX (fully clockwise)

b. Push ERASE button and note intensity level of crt screen.

CHECK—Screen is flooded (bright).

c. Set STORAGE LEVEL control to minimum (fully counterclockwise) and push ERASE button.

CHECK—Entire screen erases.

3. Fast Mode

a. Set:

A TIME/DIV	.1 μs
Storage Mode	NON STORE (push in)
INTEN	Midrange
VIEW TIME	Minimum (fully counterclockwise)
STORAGE LEVEL	Minimum (fully counterclockwise)
CH 1 VOLTS/DIV	.1 V

b. Connect 9.6 MHz signal from leveled sine-wave generator to CH 1 input via 50 Ω cable and 50 Ω termination.

c. Adjust generator for 5 div display.

d. Set:

A TRIG LEVEL	Stable display
A TIME/DIV	About 1 cycle/div
INTEN	Off (fully counterclockwise)
Storage Mode	FAST (push in)

e. After each erase cycle increase STORAGE LEVEL until background noise begins to store (in mid-screen). Set VIEW TIME control to MAX and A TRIG LEVEL fully counterclockwise.

http://manoman.sqhill.com

f. Push ERASE button and wait 1 minute.

g. Trigger sweep by turning A TRIG LEVEL clockwise and note (brightness) level of stored information (background noise). (In this step and the rest of the Performance Check or Calibration Procedure, when instructed to turn the Trigger LEVEL control either clockwise or counterclockwise to trigger the sweep, turn the control only to the triggering point; do not turn it to the extreme of rotation.)

h. Immediately push ERASE button and trigger another sweep and compare level of stored information to that noted in part g.

CHECK—Similar level of stored information and background level.

i. Set:

Storage Mode	FAST (push in)
VIEW TIME	MAX (in detent)
A TRIG LEVEL	Fully clockwise
STORAGE LEVEL	Best display
INTEN	Maximum (fully clockwise)

j. Push ERASE button and wait one minute.

k. Trigger sweep by turning A TRIG LEVEL counterclockwise and note (brightness) level of stored trace and background level.

l. Immediately push ERASE button and trigger another sweep and compare level of stored information to that noted in part k.

CHECK—Similar intensity of stored trace.

4. SAVE Mode

a. Set VIEW TIME control fully counterclockwise.

b. Push SAVE button during stored display.

CHECK—Display cannot be erased by pressing ERASE button and that the display does not auto-erase.

CHECK—Display intensity turns completely off by adjusting SAVE INTEN control counterclockwise.

5. Full Scan Writing Rate

a. Set:

SAVE	Off (button out)
Storage Mode	FAST (push in)
A TRIG LEVEL	Fully clockwise

b. Set VIEW TIME control to MAX and push ERASE button, then wait one minute.

c. Trigger sweep by turning A TRIG LEVEL control counterclockwise.

d. Set STORAGE LEVEL control for best display.

CHECK—Trace is stored and distinguishable from background everywhere within center 6 x 8 div, for 15 seconds or more.

e. Set:

A TIME/DIV	10 μs
Storage Mode	NON STORE

f. Adjust leveled sine-wave generator for 3.2 div, 50 kHz display (adjust A TRIG LEVEL control as needed for stable display).

g. Adjust A TIME/DIV VAR control for about 1 cycle/div.

h. Position bottom of display 3 div below center horizontal line.

i. Set:

A TRIG LEVEL	Fully clockwise
A TRIG MODE	SINGL SWP
Storage Mode	VAR PERS (push in)
VIEW TIME	MAX
STORAGE LEVEL	NORM

j. Push ERASE button.

k. Rotate STORAGE LEVEL control clockwise until screen starts to brighten.

l. Trigger sweep by turning A TRIG LEVEL control counterclockwise.

http://manoman.sqhill.com

CHECK—Trace is stored and distinguishable from background, within center 8 horizontal div for 15 seconds or more.

m. Set A TRIG MODE switch to AUTO and position top of display 3 div above center horizontal line.

n. Set:

A TRIG LEVEL	Fully clockwise
A TRIG MODE	SINGL SWP

o. Push ERASE button, then trigger sweep by turning A TRIG LEVEL control counterclockwise and set STORAGE LEVEL control for best display.

CHECK—Trace is stored and distinguishable from background, everywhere within center 8 horizontal div, for 15 seconds or more.

6. Check REDUCED SCAN Writing Speed

NOTE

All writing speeds in step 6 are referenced to the small center graticule (.45 cm = 1 div). All voltage amplitudes and TIME/DIV settings are referenced to the large graticule (0.9 cm = 1 div), even though the oscilloscope is in reduced scan mode.

a. Set:

Storage Mode	NON STORE (push in)
A TRIG MODE	AUTO
INTEN	Do not rotate
REDUCED SCAN (PULL)	Pull INTEN out
A TIME/DIV	5 μs
X10 MAG	On (button in)

b. Adjust leveled sine-wave generator for 1.4 large div, 350 kHz display.

c. Set A TRIG LEVEL control as needed for stable display and A TIME/DIV VAR control for about 1 cycle/large div.

d. Position center of display to top of small graticule.

e. Adjust FOCUS control for best display.

f. Set:

A TRIG LEVEL	Fully clockwise
A TRIG MODE	SINGL SWP
Storage Mode	VAR PERS
STORAGE LEVEL	NORM

g. Push ERASE button.

h. Set STORAGE LEVEL control to where screen just starts to brighten.

i. Trigger sweep by turning A TRIG LEVEL control counterclockwise and set STORAGE LEVEL control for best display.

CHECK—Trace is stored and distinguishable from background, everywhere within small graticule, for 15 seconds or more.

j. Set A TRIG MODE switch to AUTO and position center of display to bottom of small graticule.

k. Set:

A TRIG LEVEL	Fully clockwise
A TRIG MODE	SINGL SWP

l. Push ERASE button, then trigger sweep by turning A TRIG LEVEL control counterclockwise.

CHECK—Trace is stored and distinguishable from background, everywhere within small graticule, for 15 seconds or more.

m. Set A TRIG MODE switch to AUTO and position display to vertical center.

n. Set:

A TRIG LEVEL	Fully clockwise
A TRIG MODE	SINGL SWP

o. Push ERASE button, then trigger sweep by turning A TRIG LEVEL control counterclockwise.

CHECK—Trace is stored and distinguishable from background, everywhere within small graticule, for 15 seconds or more.

http://manoman.sqhill.com

p. Set:

Storage Mode	NON STORE
A TRIG MODE	AUTO
A TIME/DIV	.05 μs
VIEW TIME	Minimum (fully counterclockwise)

q. Adjust leveled sine-wave generator for 5 large div, 96 MHz display.

r. Set A TRIG LEVEL control as needed for stable display and A TIME/DIV VAR control for about 1 cycle/large div.

s. Set STORAGE MODE switch to FAST.

t. Adjust STORAGE LEVEL control for best stored display. Do not readjust STORAGE LEVEL control for rest of step 6.

u. Set VIEW TIME control to MAX (in detent).

v. Set A TRIG LEVEL control fully clockwise, push ERASE button and wait one minute.

w. Trigger sweep by turning A TRIG LEVEL control counterclockwise.

CHECK—Trace is stored and distinguishable from background, everywhere within small graticule for 15 seconds or more.

x. Push in NON STORE button.

y. Disconnect leveled sine-wave generator.

G. X-Y DISPLAY, Z-AXIS AND GATE OUTPUTS

1. X-Axis Gain

a. Set:

INTEN	Fully counter-clockwise
REDUCED SCAN (PULL)	Push INTEN in
VERT MODE	CH 2 or X-Y
POSITION (CH 1 & CH 2)	Midrange
VOLTS/DIV (both)	5 mV
VAR VOLTS/DIV (both)	Calibrated detent
CH 1 AC-GND-DC	AC
CH 2 AC-GND-DC	GND
NON STORE	On (button in)
HORIZ DISPLAY	A
A TIME/DIV	X-Y
B TIME/DIV	X-Y
VAR TIME/DIV	Calibrated detent
X10 MAG	Off (button out)
POSITION (Horiz)	Midrange
FINE	Midrange

b. Connect 50 mV signal from amplitude calibrator to CH 1 input via 50 Ω cable. Advance INTEN clockwise just enough to view dots in steps 1 through 3. Set Horizontal POSITION as required.

CHECK—Display is 2 dots, with dot centers 10 div apart, within 4% (9.6 to 10.4 div).

c. Adjust INTEN and FOCUS controls for best display.

d. Set amplitude calibrator for 20 mV signal.

CHECK—Display is 2 dots, with dot centers 4 div apart, within 4% (±0.16 div).

e. Set CH 1 AC-GND-DC switch to DC.

CHECK—Display is 2 dots, with dot centers 4 div apart, within 4% (±0.16 div).

f. Disconnect amplitude calibrator.

http://manoman.sqhill.com

2. Check X-Y Phasing

a. Connect leveled sine-wave generator signal to both inputs via 50 Ω cable, 50 Ω termination, dual-input coupler to CH 1 input and CH 2 input.

b. Adjust leveled sine-wave generator for 8 div, 50 kHz signal (horizontal line 8 div long). Set Horizontal POSITION as required.

c. Set CH 2 AC-GND-DC switch to DC.

d. Adjust CH 2 POSITION control and Horizontal POSITION controls to center display.

CHECK—Opening is 0.4 div or less, measured along center graticule line.

3. Check X-Axis Bandwidth

a. Set CH 2 AC-GND-DC switch to GND.

b. Remove dual-input coupler and connect leveled sine-wave generator to CH 1 input via 50 Ω cable and 50 Ω termination.

c. Adjust leveled sine-wave generator for 10 div, 50 kHz display (horizontal line 10 div long). Set Horizontal POSITION as required.

d. Set leveled sine-wave generator to 4.0 MHz.

CHECK—Display is 7 div or more (set Horizontal POSITION as required).

e. Disconnect leveled sine-wave generator.

4. Check Z-Axis Sensitivity

a. Set:

A TIME/DIV	.2 ms
A TRIG SOURCE	EXT
A TRIG MODE	AUTO

b. Connect 5 V signal from aplitude calibrator via 50 Ω cable, BNC T-connector and 50 Ω cable to EXT Z AXIS input and A EXT Trigger input.

c. Adjust A TRIG LEVEL control for triggered display (TRIG LED is lit).

CHECK—Trace is intensity modulated at normal (and low) INTEN control settings.

d. Disconnect amplitude calibrator.

5. Check Z-Axis Maximum Usable Frequency

a. Set:

A TIME/DIV	.05 μs
CH 2 VOLTS/DIV	1
CH 2 AC-GND-DC	DC

b. Connect leveled sine-wave generator, via 50 Ω cable, BNC T-connector and 50 Ω cable to A EXT Trigger input and CH 2 input.

c. Set leveled sine-wave generator for 5 div (5 V) 50 MHz display.

d. Move cable from CH 2 input to EXT Z-AXIS input.

CHECK—Trace is intensity modulated at normal (and lower) INTEN control settings.

e. Disconnect leveled sine-wave generator.

6. Check A and B Gates Out

a. Set:

TIME/DIV (both)	50 μs
B TRIGGER SOURCE	STARTS AFTER DELAY
DELAY TIME POSITION	0.02

b. Set test oscilloscope:

Vertical Mode	Channel 1
Channel 1 Volts/ Division	1 V
A Time/Division	0.2 ms

http://manoman.sqhill.com

c. Connect test oscilloscope input to A + GATE output via 50 Ω cable.

CHECK—Display is positive, rectangular pulse, about 5.5 V high.

d. Move 50 Ω cable to B + GATE output.

e. Set HORIZ DISPLAY switch to B DLY'D.

CHECK—Display is positive, rectangular pulse, about 5.5 V high.

f. Disconnect test oscilloscope.

7. Check Calibrator Output

a. Set test oscilloscope:

Vertical Mode	Channel 1
Channel 1 Volts/Division	10 mV
A Time/Division	1 ms

b. Connect test oscilloscope to 466 calibrator loop via 10X probe. Compensate probe to calibrator waveform.

CHECK—Display is a square wave about 0.3 V (3 div) high.

NOTE

See calibration procedure to check calibrator frequency and amplitude accuracy.

c. Disconnect probe and test oscilloscope.

http://manoman.sqhill.com

CIRCUIT DESCRIPTION

Introduction

This section of the manual contains a description of the circuitry used in the 466 Oscilloscope. The description begins with a discussion of the instrument, using the Block Diagram pullout page in the Diagrams section. Then, each circuit is described in detail using detailed block diagrams to show the interconnections between the stages in each major circuit and the relationship of the front panel controls to the individual stages.

Complete schematics of each circuit are given in the Diagrams section. Refer to these diagrams throughout the following circuit description for electrical values and relationships.

Digital Logic

Digital logic techniques are used to perform many functions within this instrument. The function and operation of the logic circuits are described using logic symbology and terminology. All logic functions are described using the positive logic convention. Positive logic is a system of notation where the more positive of two levels (HI) is called the true or 1 state; the more negative level (LO) is called the false or 0 state. The HI-LO method of notation is used in the logic descriptions. The specific voltages which constitute a HI or LO state vary between individual devices.

It should be noted that not all of the integrated circuit devices in this instrument are digital logic devices. The function of non-digital devices will be described individually using operating waveforms or other techniques to illustrate their function.

BLOCK DIAGRAM DESCRIPTION

The following discussion is provided to aid in understanding the overall concept of the 466 Oscilloscope before the individual circuits are discussed in detail. Refer to the Block Diagram pullout page in the Diagrams section.

VERTICAL SECTION

Preamp Circuits

Signals to be displayed on the crt are applied to the CH 1 OR X or CH 2 OR Y connectors. The input signals are then amplified by the Preamp circuits. Each Preamp circuit includes separate vertical deflection factor, input coupling, balance, gain, and variable attenuation controls. A trigger pickoff stage in each Vertical Preamp circuit supplies a sample of the channel signals to the A trigger amplifier and B trigger amplifier circuits. A sample of the Channel 1 signal is also supplied to the CH 1 VERT SIGNAL OUT bnc connector on the instrument rear panel.

The Channel 2 Vertical Preamp circuit contains an invert feature to invert the Channel 2 signal as displayed on the crt.

Switching Circuits

The outputs of both Vertical Preamplifier circuits and the output of the A Trigger View Amplifier circuit are connected to the Vertical Switching circuit. The Vertical Mode Switch circuit uses the inputs from the VERT MODE switches and the X-Y position of the A TIME/DIV switch to set the Vertical Switching circuit into the chosen Vertical Mode of operation. The Vertical Switching circuit then will select the input(s) to be displayed on the crt.

The Chopped Blanking signal, used to blank the switching transients between channels when the chopped mode of operation is selected, is produced in the Vertical Switching

http://manoman.sqhill.com

circuit and fed to the Z-Axis Amplifier circuit. A Normal Trigger pickoff stage at the output of the Vertical Switching circuit provides a sample of the displayed signal(s) to the Trigger Generator circuits.

Output Amplifier

The Vertical Output Amplifier circuit provides the final amplification for the signal before it is connected to the crt vertical deflection plates. This circuit includes the BEAM FINDER switch which compresses the vertical and horizontal deflection to within the viewing area to aid in locating an off-screen display.

HORIZONTAL SECTION

Trigger Generators

The A and B Trigger Generator circuits produce an output pulse that initiates the sweep signal produced by the A or B Sweep Generator circuits. The input signal to the A or B Trigger Generator circuits can be individually selected from the Channel 1 signal, Channel 2 signal, the signal(s) displayed on the crt, a signal connected to the external trigger input connectors, or (A only), a sample of the line voltage applied to the instrument. Each trigger circuit contains level, slope, coupling, and source controls.

A Sweep Generator

The A Sweep Generator circuit, when initiated by the A Trigger Generator circuit, produces a linear sawtooth output signal, the slope of which is controlled by the A TIME/DIV switch. The TRIG MODE switch controls the operating mode of the A Sweep Generator circuit. In the AUTO position, the absence of an adequate trigger signal causes the sweep to free run. In the NORM position, a horizontal sweep is presented only when correctly triggered by an adequate trigger signal. Pushing in the SINGL SWP pushbutton allows one sweep to be initiated.

Z Axis Logic

The Z Axis Logic circuit produces an unblanking gate signal to unblank the crt so that the display can be presented. This gate signal is coincident with the sawtooth produced by the A Sweep Generator circuit. A gate signal, which is also coincident with the sawtooth, is available at the A +GATE connector on the instrument rear panel. The Z Axis Logic circuit also produces an alternate sync pulse which is connected to the Vertical Switching circuit. The pulse switches the display between channels at the end of each sweep when the VERT MODE switch is in the ALT position.

B Sweep Generator

The B Sweep Generator circuit is basically the same as the A Sweep Generator circuit. However, this circuit only produces a sawtooth output signal after a delay time determined by the A TIME/DIV switch and the DELAY TIME POSITION dial. If the B Triggering SOURCE switch is set to the STARTS AFTER DELAY position, the B Sweep Generator begins to produce the sweep immediately following the selected delay time. If this switch is in one of the remaining positions, the B Sweep Generator circuit does not produce a sweep until it receives a trigger pulse occurring after the selected delay time.

Horizontal Amplifier

The output of either the A or B Sweep Generator is amplified by the Horizontal Amplifier circuit to produce horizontal deflection for the crt except in the fully counterclockwise (X-Y) position of the TIME/DIV switch. A 10X magnifier in the Horizontal Amplifier circuit increases the sweep rate 10 times in any A or B TIME/DIV switch position. Other horizontal deflection signals can be connected to the horizontal amplifier by using the X-Y mode of operation. When the TIME/DIV switch is set to X-Y, the X signal is connected to the Horizontal Amplifier circuit through the Channel 1 Vertical Preamp circuit.

Z AXIS AMPLIFIER

The Z Axis Amplifier circuit determines the crt intensity and blanking. The Z Axis Amplifier circuit sums the current inputs from the INTENSITY control, Vertical Switching circuit (chopped blanking), Z Axis Logic circuit (unblanking), and the external Z AXIS INPUT connector. The output level of the Z Axis Amplifier circuit controls the trace intensity through the CRT circuit. The CRT circuit provides the voltages and contains the controls necessary for operation of the cathode-ray tube. The storage circuit provides clock-controlled voltage signals for operating the storage crt.

POWER SECTION

The Power Supply circuit provides the low-voltage power necessary for operation of this instrument. This voltage is distributed to all the circuits in the instrument as shown by the Power Distribution Diagram. The Calibrator circuit produces a square-wave output with accurate voltage and current amplitudes which can be used to check the calibration of the instrument and the compensation of the probes. The CALIBRATOR current loop provides an accurate current source for calibration of current-measuring probe systems.

http://manoman.sghill.com

DETAILED CIRCUIT DESCRIPTION

VERTICAL SECTION

Channel 1 Preamp

Introduction. The Channel 1 Preamplifier circuit provides control of input coupling, vertical deflection factor, gain, and dc balance. Input signals for display on the crt are connected to the CH 1 OR X input connector. When the TIME/DIV control is set to the X-Y position, the input signal applied to the CH 1 OR X connector causes horizontal (X-axis) deflection. Figure 3-1 shows a detailed block diagram of the Channel 1 Preamp circuit. A schematic of this circuit is shown on Diagram 1 at the rear of the manual.

Input Coupling. Signals applied to the input connector can be ac coupled, dc coupled or internally disconnected from the input to the Vertical Amplifier. When input coupling switch S30A is set to DC, the input signal is coupled directly to the input attenuators. When the input coupling switch is set to AC, the input signal reaches the attenuators via C12, which blocks the dc component. With S30A in the GND position, the input of the amplifier is connected to ground via R15. This provides a ground reference without the need to disconnect the input signal. Resistor R14 provides a high resistance across input coupling switch S30A, allowing C12 to precharge when the switch is in GND position. Therefore, the trace remains within the viewing area of the crt when the coupling switch is moved to AC position.

Input Attenuator. The effective overall deflection factor of each vertical channel of the oscilloscope is determined by the setting of the VOLTS/DIV controls. The basic deflection system is 5 mV/division of crt deflection. To achieve the deflection factor values marked on the front panel, precision attenuators are switched into the input to the Vertical Preamplifier.

For VOLTS/DIV positions above 5 mV, frequency compensated voltage dividers (attenuators) are switched into the circuit to produce the vertical deflection factors indicated on the front panel. Each channel has 2X, 4X, 10X, and 100X attenuators which are used in combinations. The attenuation ratios are constant at all frequencies within the bandwidth of the instrument. The input attenuators maintain the same input characteristics (1 MΩ and about 20 pF) for each setting of the VOLTS/DIV control. Each attenuator has an adjustable series capacitor to provide correct attenuation at high frequencies and an adjustable shunt capacitor to provide correct input capacitance.

NOTE

Each attenuator is a hybrid encapsulated plug-in assembly. Individual components in the attenuator cannot be replaced. The attenuator must be serviced as a unit.

Source Follower. The Channel 1 signal from the input attenuator reaches Source Follower Q3297A via R42, C42, and R45. Resistor R39 provides the input resistance and R45 functions as a damping resistor. Q3297B is a constant-current source for Q3297A. Together, Q3297A and B provide high input impedance for the attenuators and the current drive needed for the First Amplifier.

In the event that excessively high amplitude signals are applied to Q3297A, they will be limited by CR3298 and the gate-source junction of Q3297A. If the negative signal amplitude forward-biases CR3298, the gate of Q3297A is clamped to about −8.7 V. Excessive positive signal amplitude will forward-bias the gate-source junction of Q3297A. When gate current flows, the gate voltage will stop increasing. Gate current is limited to a safe value by the high resistance of R42.

First Amplifier. The First Amplifier stage is an integrated emitter-coupled, push-pull, cascode amplifier, U3290. The input signal on pins 13 and 16 is converted from a single-ended to a push-pull signal by a paraphase amplifier. It is then fed to common-base stage Q3175 and Q3375. The CH 1 VAR VOLTS/DIV control connects to pin 11 of U3290 and provides variable vertical deflection. With the VAR control in its calibrated detent (wiper at ground), the A and D output transistors in U3290 are conducting. The B and C output transistors are reverse-biased. Thus the signal current available to the following amplifier stage is the collector current flowing in output transistors A and D.

When the VAR control is rotated out of its calibrated detent, the B and C output transistors in U3290 begin to conduct by amounts determined by the position of the VAR control. This causes two events:

1. The signal current in the A and D output transistors is reduced by the amount of current flowing in the B and C output transistors.
2. Output transistors A and C and output transistors B and D conduct currents of opposite polarities. The output of transistor C is summed with the output of

http://manoman.sqhill.com

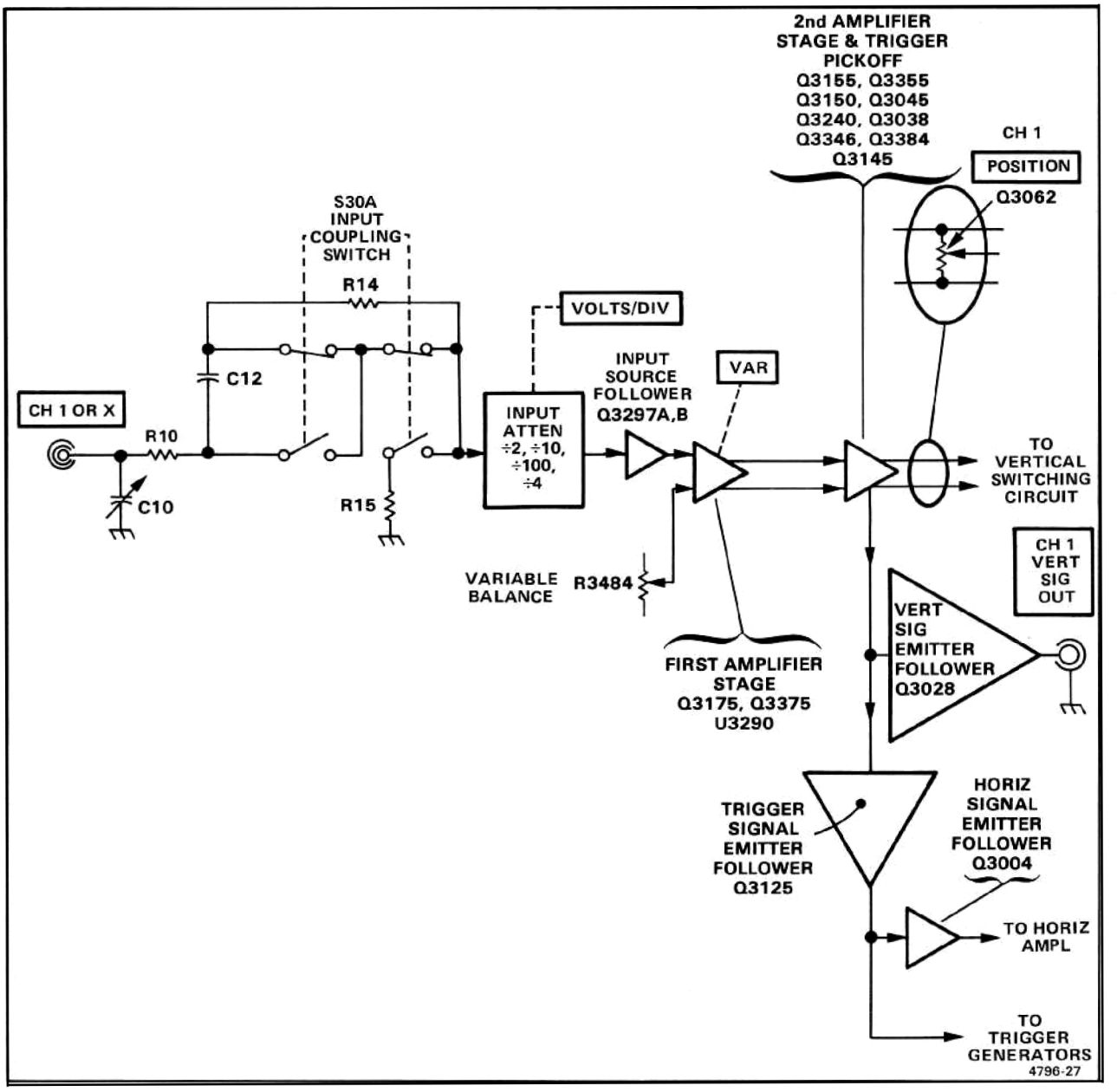

Fig. 3-1. Detailed block diagram of the Channel 1 Preamplifier circuit.

http://manoman.sqhill.com

transistor A to reduce the signal current available at pins 5 and 6, and the output current of transistor B is summed with the output current of transistor D to reduce the signal current available at pins 8 and 9.

The component values selected for the variable function provided a variable attenuation ratio of about 2.5 to 1. Channel 1 Variable Balance adjustment R3484 is adjusted so that the display does not shift when rotating the VAR control. When the Channel 1 VAR control is out of its calibrated detent the Channel 1 UNCAL indicator illuminates. The components connected between pins 2 and 3 of U3290 provide high-frequency compensation.

Transistors Q3175 and Q3375 are common-base amplifiers that convert the output current signals from U3290 into voltage signals for the Second Amplifier. Gain adjustment R3482 sets the overall gain of the Channel 1 Vertical Preamplifier by adjusting the signal voltage to the bases of Q3155 and Q3355.

Second Amplifier. Transistors Q3155 and Q3355, with Q3344 and Q3346 in the Vertical Switching circuit (Diagram 18 shows the Vertical Switching Logic), for push-pull cascode amplifiers. Voltage-variable capacitors CR3263, CR3264, and thermistor RT3267 compensate the high-frequency gain for varying ambient temperature. As temperature increases, the resistance of RT3267 decreases and the reverse-bias on CR3263 and CR3264 decreases. The capacitance of CR3263 and CR3264 increases as the reverse-bias decreases. The resultant increase in capacity at higher temperatures provide additional high-frequency peaking to counteract the effects of increased temperature on the amplifier's bandwidth.

The push-pull signals at the emitters of Q3155 and Q3355 are converted to a single-ended signal by Q3150, Q3250, Q3045, and Q3145. The current signal from Q3145 is converted to a voltage signal by common-base amplifier Q3038 and applied to the bases of Q3125 and Q3028. Q3028 provides the output signal at the CH 1 VERT SIGNAL OUT connector on the instrument's rear panel. The output signal at the emitter of Q3125 serves as the trigger signal source in the CH 1 position of the A TRIGGER SOURCE switch and as the signal source for emitter follower Q3004. When in the X-Y mode, Q3004 provides the X-axis signal from the Channel 1 Preamplifier to the Horizontal Amplifier. Diodes CR3014, CR3024, CR3023, and CR3013 protect the emitter circuit of Q3028 in the event large signals are accidentally connected to the CH 1 VERT SIGNAL OUT connector. Potentiometer R3126 adjusts the dc level of the CH 1 trigger source signal.

Potentiometer R3055 is the Channel 1 POSITION control. When set to mid-range, the constant current from Q3062 flows equally through each side of R3055. As the POSITION control is rotated from its mid-range position, one side of the amplifier conducts more current while the other side of the amplifier conducts less current. This action proportionally changes the amount of current flowing into the Delay-Line Driver, thus causing the trace to shift vertically on the crt. The mid-range operating point of the POSITION control is set by adjusting R3135.

Channel 2 Preamplifier

Introduction. The Channel 2 Premplifier circuit (diagram 2) is practically the same as the Channel 1 Preamplifier circuit. Only the differences are described here. Input signals for vertical deflection on the crt reach the preamplifier via the CH 2 OR Y input connector. When the TIME/DIV switch is set to X-Y mode, the Channel 2 input signal provides the vertical (Y-axis) deflection.

First Amplifier. The First Amplifier stages of both channels operate similarly. However, the Channel 2 circuit includes the Invert switching function, which allows the Channel 2 display to be inverted. When pushed in, the INVERT control changes the biasing on the output transistors of U3790 so that the normally inactive transistors (B and C) carry the signal. Because their outputs are cross-coupled from side to side, the output signal is of opposite polarity from the signal available when the INVERT control is in its normal position (button out). Channel 2 Invert Balance control R3975 allows the dc balance of the stage to be adjusted to eliminate trace shift when switching from a normal to an inverted display.

Vertical Switching Logic

A schematic of this circuit is shown on Diagram 3A at the rear of this manual.

Gate Control. The gate-control circuit operates three diode gates that connect the input(s) to the Delay-Line Driver.

A read-only memory (ROM). U3605, and a quad flip-flop (FF), U3705, form the gate-control circuit. The gate-control circuit responds to inputs from the front-panel VERT MODE control and the A TIME/DIV control by enabling the appropriate diode gate(s). The enabled gate(s) then pass signals to the Delay-Line Driver. Figure 3-2 shows details of the gate-control logic.

http://manoman.sghill.com

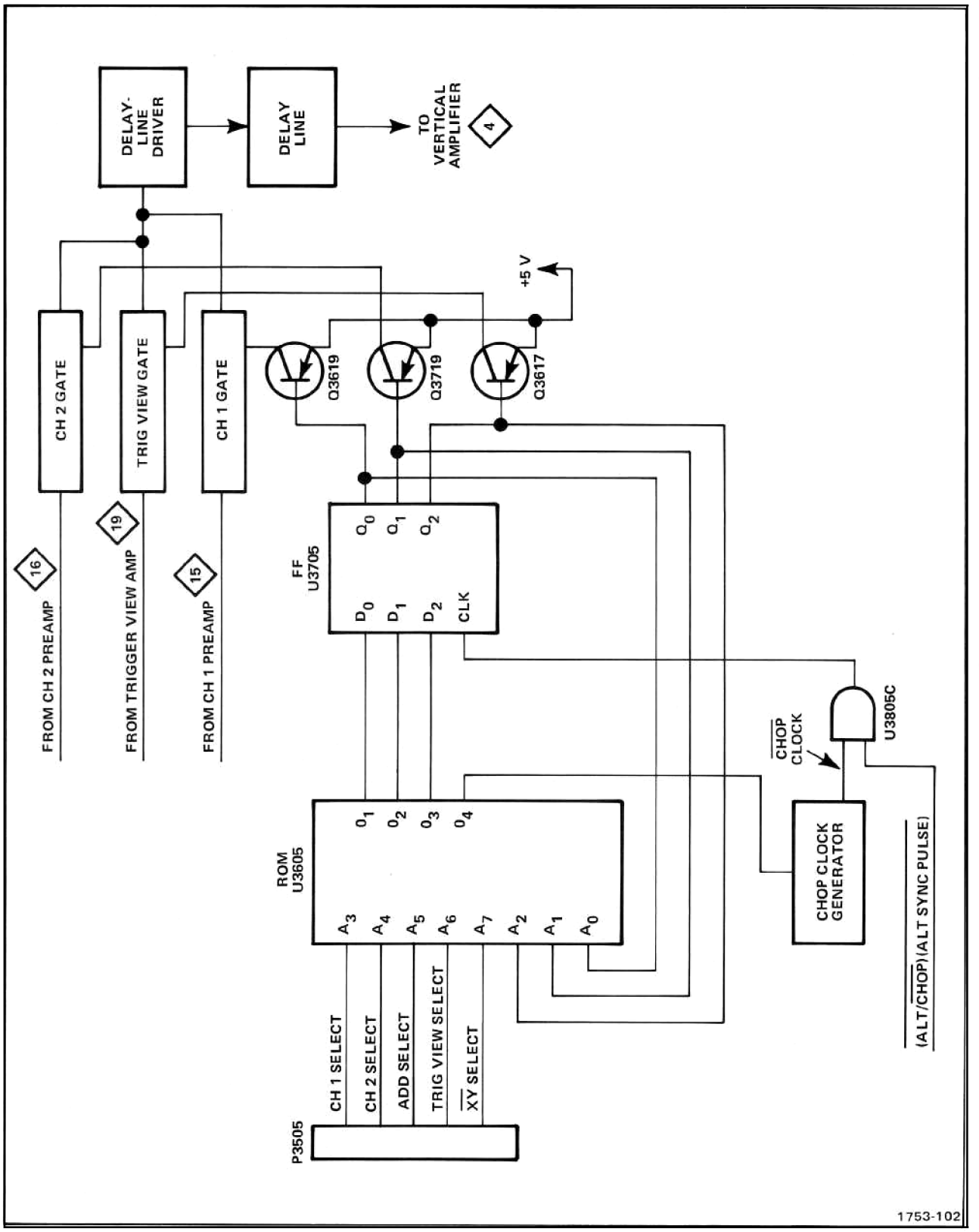

Fig. 3-2. Simplified block diagram of gate-control logic.

http://manoman.sqhill.com

The ROM, U3605, is the heart of the switching logic circuitry. It has eight inputs—four from the VERT MODE control on the front panel, and three from FF U3705. The ROM produces a four-bit output, on its 0_4-0_1 lines, that governs the transistors controlling the diode gates and the chop clock generator.

The most-significant bit of U3605's output, 0_4 on pin 9, controls the chop clock generator. A high-logic level on the 0_4 output enables the chop clock generator.

Bits 0_3, 0_2, and 0_1 are connected to FF U3705. The output of U3805C clocks U3705 at the following times.

1. At the end of each sweep when the VERT MODE is set to ALT, or
2. At the rate of the chop clock generator when the VERT MODE is set to CHOP.

Depending on the mode selected, one or more of the gate-drive transistors will be activated. Via the respective gates, Q3619 controls the Channel 1 signal, Q3719 controls the Channel 2 signal, and Q3617 controls the Trigger View signal.

Figure 3-3 shows the logic content of the memory cells in U3605. A "1" indicates a high-logic level. The digits within the heavy-lined border represent the 1024 memory cells.

Data in the column at the left side of Fig. 3-3 represents the inputs to U3605 from the A TIME/DIV control and the VERT MODE control. The input from the A TIME/DIV control indicates whether it is in X Y position. The data in this column is considered "present" data.

The headings for the eight columns of ROM data represent the eight possible combinations of logic levels on the three feedback lines from U3705 to U3605. The levels on the feedback lines represent "past" data because the feedback lines activate the gate-drive transistors.

Figure 3-3 contains three categories of data, as follows:

1. The column of data at the left end represents the input to ROM U3605. It is called "present" data.

2. The eight column headings within the heavy-lined border represent the logic levels on the three feedback lines from U4705 to U3605. These three logic levels are "past" data relating to the oscilloscope's mode of operation.

3. The four-bit binary numbers within the heavy-lined border represent the logic levels on the ROM's four output lines. These numbers are data relating to the next mode of operation—the mode the oscilloscope will take after the next clock pulse occurs. These numbers represent "future" data.

Finding the Outputs of ROM U3605. In this discussion we will assume the CHOP/ALT button is depressed.

1. In Fig. 3-4, find the column that matches the present display on the screen of the oscilloscope.

   The column headings appear by name and number as Trigger View, 011; Add, 100; Ch 2, 101; and Ch 1, 110. The digits represent the logic levels on the feedback lines from FF U3705 to ROM U3605.

2. Locate the row of data that pertains to the new operating mode of the 466.

   Do this by looking in the "Present" data column at the left end of the table for a combination of 1's and 0's that represents the front-panel control settings. (A "1" represents a depressed pushbutton.) The left-most digit, bit 7, will be a "1" when the A TIME/DIV control is not in X Y position.

3. Find the four-bit binary number at the intersection of the row and column you located in steps 1 and 2. The outputs of U3605 should have these levels. Of the four bits, the most-significant, 0_4, controls the chop clock (1 means "run the clock"), and the other three mean "go to the column with this heading". The latter three bits identify the channel that will be displayed on screen when U3705 receives the next clock pulse.

4. Find the column whose heading number matches the last three bits of the number you located in step 3.

5. Locate the number appearing at the intersection of this new column and the row you located in step 2.

6. Find the column whose heading matches the last three bits of the number you located in step 5.

7. Locate the number appearing at the intersection of this column and the row you found in step 2.

http://manoman.sqhill.com

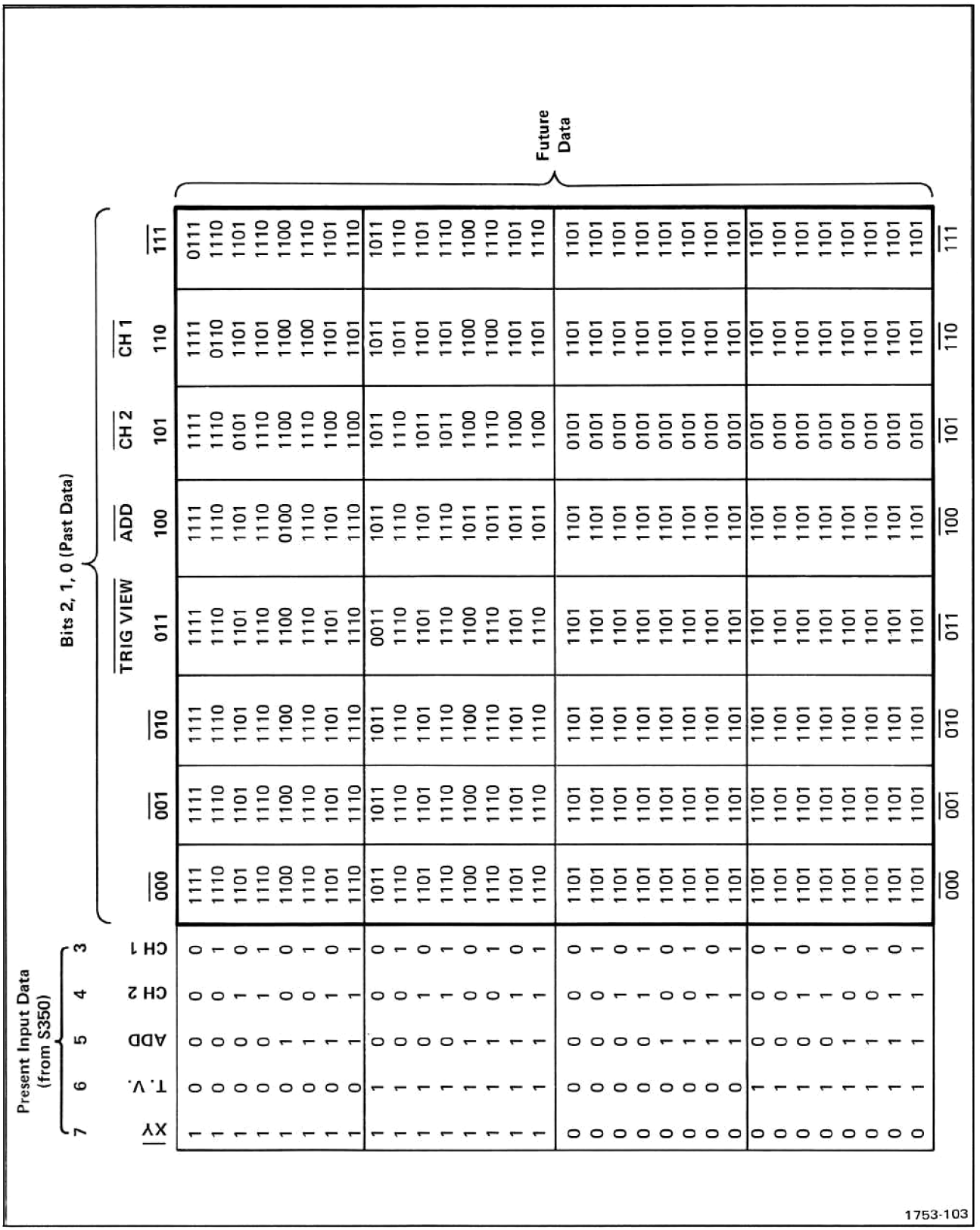

Present Input Data (from S350) 7	6	5	4	3		Bits 2, 1, 0 (Past Data) 000	001	010	011 TRIG VIEW	100 ADD	101 CH 2	110 CH 1	111 Future Data
XY	T. V.	ADD	CH 2	CH 1									
1	0	0	0	0		1111	1111	1111	1111	1111	1111	1111	0111
1	0	0	0	1		1110	1110	1110	1110	1110	1110	0110	1110
1	0	0	1	0		1101	1101	1101	1101	1101	0101	1101	1101
1	0	0	1	1		1110	1110	1110	1110	1110	1110	1101	1110
1	0	1	0	0		1100	1100	1100	1100	0100	1100	1100	1100
1	0	1	0	1		1110	1110	1110	1110	1110	1110	1100	1110
1	0	1	1	0		1101	1101	1101	1101	1101	1100	1101	1101
1	0	1	1	1		1110	1110	1110	1110	1110	1100	1101	1110
1	1	0	0	0		1011	1011	1011	0011	1011	1011	1011	1011
1	1	0	0	1		1110	1110	1110	1110	1110	1110	1011	1110
1	1	0	1	0		1101	1101	1101	1101	1101	1011	1101	1101
1	1	0	1	1		1110	1110	1110	1110	1110	1011	1101	1110
1	1	1	0	0		1100	1100	1100	1100	1011	1100	1100	1100
1	1	1	0	1		1110	1110	1110	1110	1011	1110	1100	1110
1	1	1	1	0		1101	1101	1101	1101	1011	1100	1101	1101
1	1	1	1	1		1110	1110	1110	1110	1011	1100	1101	1110
0	0	0	0	0		1101	1101	1101	1101	1101	0101	1101	1101
0	0	0	0	1		1101	1101	1101	1101	1101	0101	1101	1101
0	0	0	1	0		1101	1101	1101	1101	1101	0101	1101	1101
0	0	0	1	1		1101	1101	1101	1101	1101	0101	1101	1101
0	0	1	0	0		1101	1101	1101	1101	1101	0101	1101	1101
0	0	1	0	1		1101	1101	1101	1101	1101	0101	1101	1101
0	0	1	1	0		1101	1101	1101	1101	1101	0101	1101	1101
0	0	1	1	1		1101	1101	1101	1101	1101	0101	1101	1101
0	1	0	0	0		1101	1101	1101	1101	1101	0101	1101	1101
0	1	0	0	1		1101	1101	1101	1101	1101	0101	1101	1101
0	1	0	1	0		1101	1101	1101	1101	1101	0101	1101	1101
0	1	0	1	1		1101	1101	1101	1101	1101	0101	1101	1101
0	1	1	0	0		1101	1101	1101	1101	1101	0101	1101	1101
0	1	1	0	1		1101	1101	1101	1101	1101	0101	1101	1101
0	1	1	1	0		1101	1101	1101	1101	1101	0101	1101	1101
0	1	1	1	1		1101	1101	1101	1101	1101	0101	1101	1101
						000	001	010	011	100	101	110	111

1753-103

Fig. 3-3. ROM program for 466 mode control.

http://manoman.sqhill.com

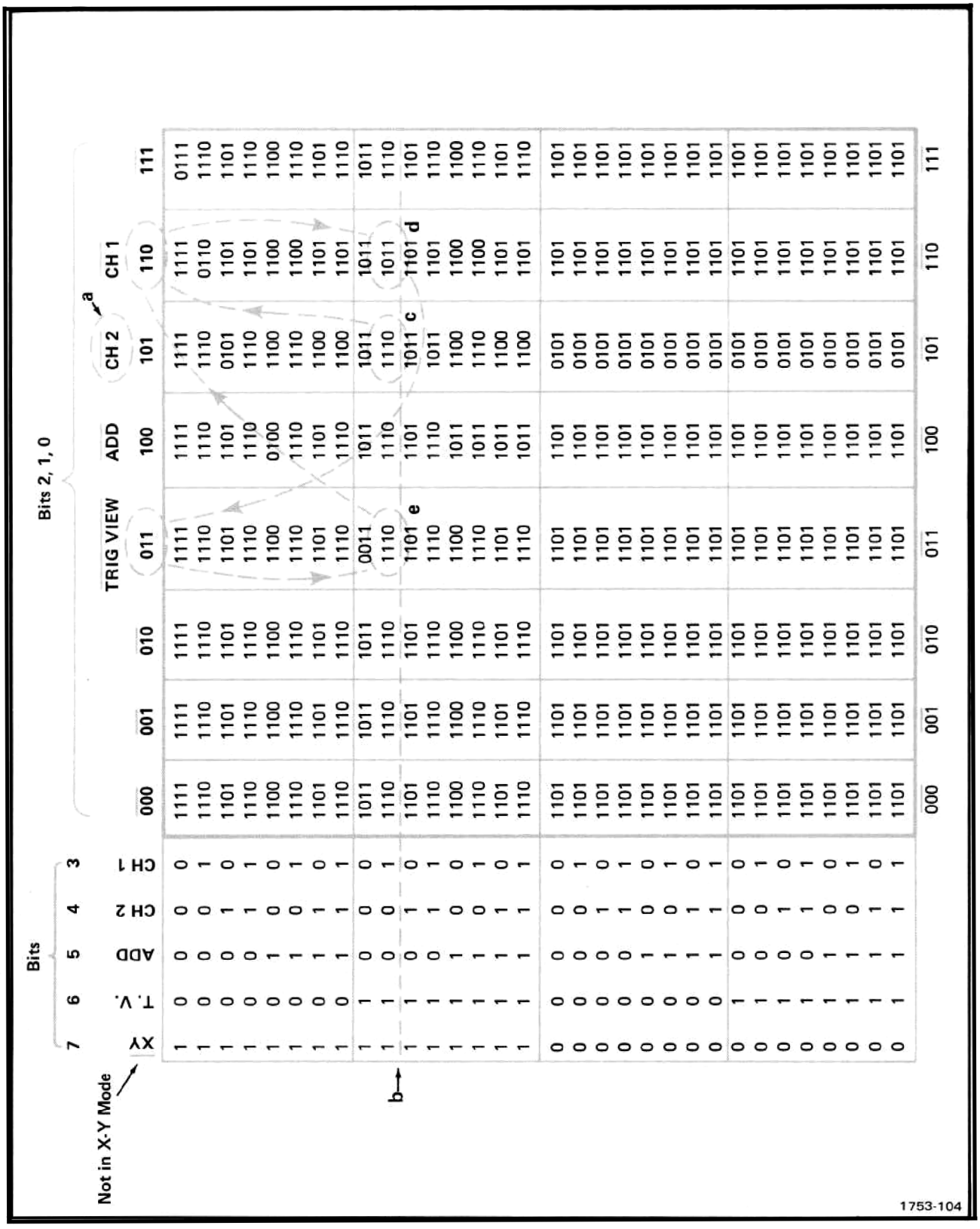

Fig. 3-4. Sample sequence of outputs from ROM U3605.

http://manoman.sqhill.com

Example

Given:	Vertical Mode	
	Presently displayed	CH 2
	Desired	CH 1 and TRIG VIEW (CHOP/ALT button pressed in)

Find: Logic levels at the outputs of U3605 for transition and operation.

Procedure: (Refer to Fig. 3-4 for details of this procedure.)

a. Find column for present operating mode (CH 2).

b. Find rows of data for CH 1 and TRIG VIEW. This row has digits 11001, which means:

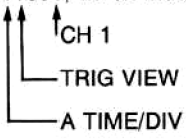

c. Find the number at the intersection of the column and row you located in parts a and b. The number is 1110, which means:

run the chop clock — go to column headed 110 (CH 1)

This means that CH 1 will be displayed when U3705 receives the next clock pulse.

d. Find the number at the intersection of column 110 (CH 1) and the row of part b. The number is 1011, which means:

run the chop clock — go to column headed 011 (TRIG VIEW)

This means that the TRIG VIEW signal will be displayed when U3705 receives the next clock pulse.

e. Find the number at the intersection of column 011 and the row found in part b. The number is 1110, which means:

run the chop clock — go to column headed 110 (CH 1)

The sequence of operations we find in parts c, d, and e shows that the ROM and FF should operate in a CH 1, TRIG VIEW, CH 1 ... sequence.

Channel 1 Only. When the CH 1 VERT MODE button is pressed, it causes a high-logic level on the CH 1 SELET line. The CH 2 SELECT, ADD SELECT, and TRIG VIEW SELECT inputs to U3605 will be at low-logic levels and the $\overline{XY}$ SELECT line will be at a high-logic level.

This combination of inputs causes outputs of 0110 respectively, on the 0_4-0_1 outputs of U3605. The low-logic level on U3605's 0_4 output disables the chop clock. Via FF U3705, the 110 on the 0_3, 0_2, and 0_1 lines from ROM U3605 turn on gate-drive transistor Q3619 and turn off Q3719 and Q3617. When forward-biased, Q3619 saturates and conducts current through R3625 and R3626. This current develops about −2 V at the junction of R3625 and R3626, which is connected to the cathode of shunt diodes CR3443 and CR3447. (The diode gates consist of four diodes—two series diodes that pass the signal to the Delay-Line Driver and two shunt diodes that control the series diodes.) Because the anodes of CR3443 and CR3447 are at about −2.6 V, they are turned off, permitting signals from Q3344 and Q3346 to reach the Delay-Line Driver via series diodes CR3441 and CR3445.

The diode gates in the Trigger View and Channel 2 paths are both turned off by voltages of about −4.1 V on the cathodes of shunt diodes CR3432 and CR3434 (Trigger View) and CR3543 and CR3547 (Channel 2).

Channel 2 Only. When the CH 2 VERT MODE button is pressed it causes a high-logic level on the CH 2 SELECT line. The CH 1 SELECT, ADD SELECT, and TRIG VIEW SELECT inputs to ROM U3605 will be at low-logic levels and the $\overline{XY}$ SELECT line will be at a high-logic level.

This combination of inputs causes output of 0101 respectively, on the 0_4-0_1 outputs of U3605. The low-logic level on U3605's 0_4 output disables the chop clock. Via FF U3705, the 101 on the 0_3, 0_2, and 0_1 lines from ROM U3605 turn on gate drive transistor Q3719 and turn off Q3619 and Q3617. When forward-biased, Q3719 saturates and conducts current through R3724 and R3725. This current develops about −2 V at the junction of R3724 and R3725, which is connected to the cathode of shunt diodes CR3543 and CR3547. (The diode gates consist of four diodes—two series diodes that pass the signal to the Delay-Line Driver and two shunt diodes that control the series diodes.) Because the anodes of CR3543 and CR3547 are at about −2.6 V, they are turned off, permitting signals from Q3644 and Q3646 to reach the Delay-Line Driver via series diodes CR3541 and CR3545.

The diode gates in the Trigger View and Channel 1 paths are turned off by voltages of about −4.1 V on the cathodes of shunt diodes CR3432 and CR3434 (Trigger View) and CR3443 and CR3447 (Channel 1).

A External Trigger View Only. When the TRIG VIEW button is depressed it causes a high-logic level on the TRIG VIEW SELECT input line to ROM U3605. The CH 1 SELECT, CH 2 SELECT, and ADD SELECT inputs to U3605 will be at low-logic levels.

http://manoman.sqhill.com

The output logic levels of ROM U3605 are 0011 on the 0_4-0_1 outputs, respectively. The low-logic level on 0_4 disables the Chop Clock generator. The 011 levels on 0_3, 0_2, and 0_1 cause FF U3705 to turn on gate-drive transistor Q3617 and turn off Q3619 and Q3719. The same bias levels as for "Channel 1 Only" reverse-bias the Trigger View channel's shunt diodes (CR3432 and CR3434), permitting the Trigger View signal to reach the Delay-Line Driver via series diodes CR3436 and CR3438.

The Trigger View channel is also subject to the control of the TRIG VIEW ENABLE line. When the A TRIGGER SOURCE switch is in EXT or EXT ÷ 10 and the TRIG VIEW button is pressed in, the TRIG VIEW ENABLE line is at a low-logic level, permitting the diode gate and common-base transistors Q3225 and Q3235 to function normally. When the A TRIGGER SOURCE switch is not in EXT or EXT ÷ 10 or when the TRIG VIEW button is not pressed in, the TRIG VIEW ENABLE line is at a high-logic level. A high-logic level on the TRIG VIEW ENABLE line reverse-biases Q3225 and Q3235.

Chop Clock and Alternate Logic. The Chop Clock generator produces pulses for switching between vertical displays at a rate independent of sweep speed. The operating frequency of the generator is about 1 MHz.

When the ALT/CHOP button is pressed in and the VERT MODE control is set to more than one display, the Chop Clock generator operates. To present multiple displays, the Chop Clock and Alternate Logic circuit generates pulses to clock FF U3705. Components U3905B, U3805A, R3903, R3904, and C3804 form the Chop Clock generator.

When more than one channel is selected and the ALT/CHOP button is pressed in (Chop mode), a high-logic level from U3605's 0_4 output will enable U3805B and U3905D. A low-logic level on the ALT/$\overline{\text{CHOP}}$ SELECT line disables U3905D, whose output, a high-logic level, activates U3805B. (Before U3805B was activated, its output was a low-logic level which kept U3905B disabled.) When activated, U3805B activates U3905B by asserting a high-logic level on the pin 5 input of U3905B. Now that U3905B is active, the low-logic level at its output causes C3804 to discharge toward a low-logic level. When the voltage on C3804 reaches the low threshold voltage of U3805A, that gate switches to a low-logic level output. The low-logic level from U3805A disables U3905B, causing U3905B to switch to a high-logic level. Now C3804 starts charging toward a high-logic level. When the voltage on C3804 reaches the high threshold voltage of U3805A, U3805A switches to a high-logic level output and the cyle repeats. The operating frequency of the chop generator is about 1 MHz. This is determined by the RC time constant of R3903 and C3804 and the threshold levels of U3805A. Figure 3-5 shows details of the waveform at the junction of R3903 and C3804.

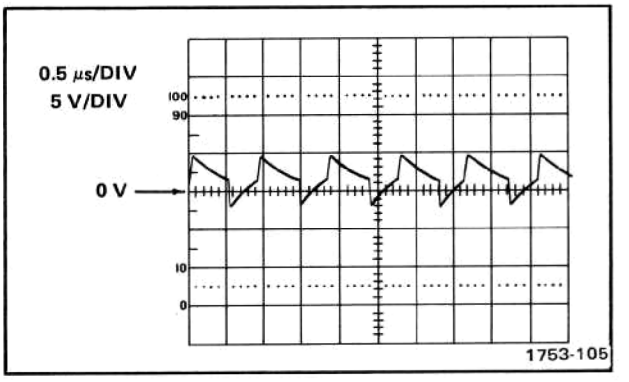

Fig. 3-5. Waveform at the junction of R3903 and C3804.

When the ALT/CHOP control is set to CHOP, a low-logic level on the ALT/CHOP SELECT line disables U3905A. The output of U3905A will be a high-logic level that enables U3805C, which will pass the output of the chop generator on the gate-control circuit and the crt-blanking circuitry.

Because FF U3705 responds only to positive-going transitions, the chop frequency is half the frequency of the chop generator, or about 500 kHz.

When the setting of the VERT MODE control calls for a multiple-trace chopped display, FF U3605 responds to pulses from the chop generator by sequentially activating gate-drive transistors Q3619, Q3719, and Q3617. The sequence of switching is CH 1, CH 2, ADD, and TRIG VIEW. The outputs of U3705, which control the gate-drive transistors, are connected to ROM U3605. Refer to "Gate Control" discussion for details of that circuitry. When the ALT/CHOP control is set to ALT, the ALT/$\overline{\text{CHOP}}$ SELECT line will be at a high-logic level. The high-logic level on ALT/$\overline{\text{CHOP}}$ SELECT has two effects, as follows.

1. The high-logic level on the ALT/$\overline{\text{CHOP}}$ SELECT line enables U3905D. Whenever an operator selects a multiple display while U3905D is enabled, U3905D will be activated and will stop the chop generator.

2. The high-logic level on the ALT/$\overline{\text{CHOP}}$ SELECT line enables U3905A, which will then be activated by the VERT ALT SYNC PULSE. When activated, U3905A disables U3805C. At the end of the sweep, U3905A, now disabled, produces a high-logic level that again activates U3805C. The positive-going edge of U3805C's output clocks FF U3705. Flip-flop U3705 will now switch among the selected inputs at a rate set by the VERT ALT SYNC PULSEs.

   If the VERT MODE control is set for a single display the 0_4 output of U3605 will be at a low-logic level, disabling the chop generator via U3805B. When just one display is selected, FF U3705 receives clock pulses but does not change state.

http://manoman.sqhill.com

Add Mode. The ROM U3605 is programmed to turn on the diode gates for both CH 1 and CH 2 when the ADD button is depressed. (The Add display is independent of the position of the CH 1 and CH 2 buttons.) When the ADD button is depressed, the Q_0 and Q_1 outputs of U3705 will be at low-logic levels, turning on gate-drive transistors Q3619 and Q3719. The $\overline{Q_0}$ and $\overline{Q_1}$ lines will be at high-logic levels, activating U3805D. The output of U3805 turns on Q3636, which furnishes current to the junction of R3532 and R3534 to maintain the correct input voltage to the Delay-Line Driver.

X Y Mode. When the TIME/DIV control is set to X Y, it causes a low-logic level on the $\overline{XY}$ SELECT line. The ROM U3605 responds to the $\overline{XY}$ SELECT signal with outputs of 0010 on its 0_4-0_1 lines. These levels disable the chop clock and turn on Channel 2 gate-drive transistor, Q3719. Transistor Q3719 turns on the Channel 2 diode gate, which connects Channel 2 to the Delay-Line Driver as the Y part of the display. The CH 2 button need not be depressed, because U3605 accepts only the Channel 2 input when the TIME/DIV control is in X Y position.

Delay-Line Driver. The Delay-Line Driver accepts the output of the diode gate(s) and, via the delay line, drives the input of the vertical output amplifier.

Transistors Q3426 and Q3428 form the driver amplifier. Part of Q3426's output is the input to the trigger amplifier, Q3215 and Q3118. When closed, 20 MHz BW switch S3414 connects a pi filter between the output terminals of the delay line to reduce the upper −3 dB point of the vertical system to about 20 MHz. The pi filter consists of C3306, C3405, L3412, and L3512. R3314 and R3514 are termination resistors.

Normal Trigger Pickoff Amplifier. The trigger pickoff amplifier furnishes a sample of the signal from the Delay-Line Driver to the trigger circuits. The trigger circuits will use this signal when one or both Trigger SOURCE control(s) is (are) set to NORM.

Transistors Q3215, Q3118 and associated parts form the Normal Trigger Pickoff Amplifier. Part of the output of Q3426, in the Delay-Line Driver, is the input to the trigger amplifier. Potentiometer R3202, Norm Trig DC Bal, controls the dc level of Q3118's collector voltage so that when the Trigger LEVEL control is set to zero, the sweep will trigger at the zero-volt level of the displayed signal.

Chopped Blanking Amplifier. When the ALT/CHOP button is in CHOP, a low-logic level on the ALT/$\overline{CHOP}$ SELECT line disables U3905D. The high-logic level at U3905D's output enables U3905C to pass the output of the chop generator. Capacitor C3813 and R3916 differentiate the Chop pulse to produce the fast-rise spikes needed for blanking pulses. Diode CR1918 limits the positive spike and R3815 limits the base current in Q3812. The positive-going part of the waveform reverse-biases Q3812. The negative-going spike drives Q3812 rapidly into conduction. The blanking time is determined by the charging time of C3813 via R3916 and R3815. The positive-going output pulse, which is coincident with trace switching, is connected to the Z-Axis Amplifier via R3914.

Delay Line. Delay Line DL339 provides approximately 120 ns delay for the vertical signal to allow the Sweep Generator circuits time to initiate a sweep before the vertical signal reaches the vertical deflection plates of the crt. This allows the instrument to display the leading edge of the signal originating the trigger pulse when using internal triggering.

Vertical Mode Switch

The Vertical Mode switch produces the logic necessary to put the Vertical Switching Logic circuit into the correct state for the selected vertical mode. The Scale-Factor Switching circuit selects the correct scale-factor indicator. Diagram 3B shows these circuits.

Exclusive-NOR Circuits. The exclusive-NOR circuits produce a negative pulse on the ALT/$\overline{CHOP}$ SELECT line when any VERT MODE push button is actuated (pressed in). While the ALT mode is selected, the negative pulse will enable the chop generator to produce clock pulses to switch the Vertical Switching Logic circuit to the selected vertical mode for the next display.

When the CH 1 VERT MODE button is depressed, the condition of exclusive-NOR circuit U5235D is as follows:

1. The pin 8 and 9 inputs are at high-logic levels. Capacitor C5135 has charged to a high-logic level through R5135.
2. The output, pin 10, is at a high-logic level.

When the CH 1 button is released, U5235D's pin 9 input immediately receives a low-logic level, but because C5135 is charged to a positive voltage, pin 8 stays at a high-logic level. The differing inputs activate U5235D, which produces a low-logic level on the ALT/$\overline{CHOP}$ SELECT line that turns on the chop generator. Meanwhile, C5135 is discharging toward a low-logic level via R5135. When the voltage on C5135 reaches U5235D's low threshold voltage, U5235D will be disabled and the ALT/$\overline{CHOP}$ SELECT line will revert to a high-logic level. The chop generator then stops.

http://manoman.sqhill.com

The Trigger View, Add, and Channel 2 circuits work like the Channel 1 circuit.

When the ALT/CHOP control is set to CHOP, VERT MODE switch S5210 grounds the ALT/$\overline{\text{CHOP}}$ SELECT line. The chop generator is then enabled continuously if two or more inputs are selected.

When the A TIME/DIV control is set to X Y, a −8 V level reaches the $\overline{\text{XY}}$ SELECT line via P5222-1. This level sets the Vertical Switching Logic circuit to the X Y mode of operation. The −8 V also reaches the ALT/$\overline{\text{CHOP}}$ SELECT line, via R51, to enable the chop generator when ALT is selected.

Vertical Output Amplifier

General. The Vertical Output Amplifier circuit provides the final stage of amplification needed for the vertical input signal to drive the crt vertical deflection plates. A schematic diagram of this circuit is shown on diagram 4 at the back of this manual.

Output Amplifier. Q412-Q416 and Q422-Q426 make up the first vertical output amplifier stage. Most of the components connected between the emitters of Q412 and Q422 provide high-frequency compensation for the delay line. RT421 changes value with variations in ambient temperature to compensate for temperature-associated changes in amplifier gain. Gain Adjustment R415 adjusts the gain for the Vertical Output Amplifier.

Integrated circuit U464 is a multi-stage cascode amplifier cell. The input signal is applied push-pull between pins 1 and 5 with the inverted output signal taken from pins 9 and 12. Some of the components connected between pins 2 and 4 provide slower time constants to compensate for thermal variations. The Bias adjustment (R478) sets the dc levels within the stage to optimize the operating performance of U464. The sensitivity at the vertical deflection plates is about 3.75/div.

Beam Finder. When the BEAM FINDER button is pressed, it reduces the vertical and horizontal deflection so that all signals are compressed to within the graticule area (regardless of display amplitude or position) to indicate the position of the display relative to graticule center. Also, it overrides the action of the INTEN potentiometer and unblanking signal in the Z-Axis amplifier, and permits viewing a display that might otherwise not be visible.

Beam finder effect on the horizontal deflection is described under Gain Setting Amplifier within the Horizontal Amplifier description. The effect on the Z-Axis Amplifier is described under Z-Axis Amplifier.

In the Vertical amplifier, when the BEAM FINDER button is not pressed, the first section of S400 connects emitter resistors (R472, R473, R474, and R475) to the anode of CR1427 via P491 pin 3 and P400 pin 3. Emitter current causes CR1427 to conduct and provides a ground reference for the emitter resistors. The second section of S400 normally applies +65 volts to the vertical output final amplifier collector circuit and the vertical deflection plates via pin 1 of P400.

When the BEAM FINDER button is pressed, the second section of S400 disconnects the +65 volt source and +65 volts is applied through R498. This maintains correct average vertical deflection plate voltage to provide proper focus of a compressed display. The first section of S400 opens the emitter resistor path to CR1427 and emitters return to ground via R471. The dynamic range and gain of the vertical output stage are thus reduced to provide a compressed, properly focused, vertical display within the graticule area, to indicate the position of the display relative to the graticule center.

HORIZONTAL SECTION

A and B Trigger Generators

General. The Trigger Generator circuits (diagram 5) produce trigger pulses to start the Sweep Generator circuits. These trigger pulses are derived either from the internal trigger signal (sampled from the vertical deflection system), from an external signal connected to the external trigger connectors, or from a sample of the line voltage applied to the instrument. Controls are provided in each circuit to select trigger level, slope, coupling, and source.

An A Trigger View Amplifier circuit amplifies the external A Trigger signal for application to the Trigger View Diode Gate, where the trigger signal may be selected for viewing. The trigger view display provides a method of making a quick and convenient check of the external trigger signal being used to trigger the A Sweep Generator. The external trigger input signal may be continually monitored, when in the NON STORE mode, by selecting the A TRIGGER VIEW Vertical Mode.

Since the A and B Trigger Generator circuits are similar, only the A Trigger Generator circuit action and the differences between the A and B Trigger Generator circuits are described.

http://manoman.sqhill.com

Trigger Source. Trigger SOURCE switch S610A selects the source of the trigger signal. The sources available to the A Trigger Generator circuit are: the signal(s) being displayed (NORM), Channel 1 (CH 1), Channel 2 (CH 2), LINE, and EXT. The EXT/10 switch position (for the A Trigger circuit only) attenuates the external trigger signal by a factor of 10. The B Trigger SOURCE switch does not have a LINE or an EXT/10 position, but it does have a STARTS AFTER DELAY position.

The STARTS AFTER DELAY position of the B Trigger SOURCE switch is used in conjunction with the DELAY TIME POSITION control. When STARTS AFTER DELAY is selected as a trigger source for the B Sweep, +5 V is applied to the Free Run input of U550, causing the B sweep to start immediately after the delay time (selected by the DELAY TIME POSITION control) has elapsed.

In the LINE mode of triggering, a sample of the power line frequency is obtained from the secondary of power transformer T1701 located in the Low Voltage Power Supply circuit. To prevent unwanted attenuation of the trigger signal by the LF REJ circuit, the A Trigger COUPLING switch should not be set to LF REJ when using line voltage as a trigger source.

Trigger Coupling. The Trigger COUPLING switches offer a means of accepting or rejecting certain components of the trigger signal. In the AC, LF REJ, and HF REJ modes of trigger coupling, the dc component of the trigger signal is blocked by coupling capacitors C611 or C612. Frequency components below 60 Hz are attenuated when using AC coupling, and components below about 50 kHz are attenuated when using LF REJ coupling. The higher frequency components of the trigger signal are passed without attenuation. In the HF REJ mode of trigger coupling, the high-frequency components of the trigger signal (above about 50 kHz) and low-frequency components (below 60 Hz) are attenuated, while the remaining frequency components are passed with minimal attenuation. The DC mode of trigger coupling passes all signals from dc to at least 100 MHz without attenuation.

Input Source Follower. Transistor Q622 is an FET source follower. It provides a high input impedance (set primarily by R616) for the trigger signal and also provides isolation between the Trigger Generator circuit and the trigger signal source. Diode CR614 provides input protection for Q622 if an excessively high amplitude negative-going input signal is present. Q624 is a high-impedance, relatively constant, current source for Q622, and provides a measure of temperature compensation for Q622.

Trigger Generator. Monolithic integrated circuit U650 generates a stable Trigger Gate output to the A Sweep Start Comparator composed of Q904 and Q906. Trigger Level Centering adjustment R635 sets the level at U650 pin 9 so the display is correctly triggered when the LEVEL control is centered. LEVEL control R630 varies the level at U650 pin 9 to select the point on a trigger signal where triggering occurs.

The slope of the input signal that triggers the Sweep Generator circuit is determined by the setting of SLOPE switch S630. When the SLOPE switch is set to the + position, the output signal at U650 pin 14 switches HI only on a positive slope of the input signal at pin 7. When the SLOPE switch is set to the − position, the output signal at pin 14 switches HI only on a negative slope of the input signal at pin 7. The A Slope Center adjustment, R655, balances U650 so that triggering occurs at the same level on both the positive and negative slopes. The A Trigger Sensitivity adjustment, R654, adjusts the built-in hysteresis in U650 to a level that will not allow triggering to occur on low-level noise at the input.

At the end of the sweep time and during holdoff, a HI level is applied to U650 pin 17, resetting the IC and causing the output at pin 14 to go LO. The HI reset level remains on pin 17 during holdoff time to ensure that a sweep-gating signal will not be generated at pin 14 until the sweep circuit has returned to its quiescent state.

Trigger View Amplifier. Transistors Q672 and Q682 make up half of a cascode, push-pull amplifier. In the Vertical Switching Logic circuit, Q3225 and Q3235 form the rest of the Trigger View Amplifier. The Trigger View Amplifier requires that the A Trigger SOURCE switch be set to EXT or EXT/10 and the A TRIG VIEW Vertical Mode be selected before the amplifier is enabled to pass the external trigger signal to the diode gate and on to the Vertical Output Amplifier. If the trigger view display is selected, the Vertical Switching Logic circuit will turn on the Trigger View Diode Gate during the proper time to pass the signal on to the Delay Line Driver.

A sample of the push-pull external trigger signal is taken from U650 pins 7 and 9 and amplified by Q672 and Q682. Trigger View Centering control R675 is used to vertically position the trigger view display. Potentiometer R679 is adjusted to set the Gain of the Trigger View Amplifier; R673, C673, L676, C676, and R676 provide HF compensation. Diodes VR685, CR674, and CR684 are used to clamp the collectors of Q672 and Q682 to approximately +5.7 V whenever the Trigger View feature is disabled. Transistors Q3225 and Q3235 will be reverse biased during this time.

http://manoman.sqhill.com

A and B Sweep Generators

General. The A and B Sweep Generators produce sawtooth voltages that are amplified by the Horizontal Amplifier circuit to provide horizontal deflection to the crt. These sawtooth voltages are produced on command (trigger pulses) from the Trigger Generator circuits. The Sweep Logic circuits also produce gate waveforms that are used by the Z Axis Logic circuit to unblank the crt during sweep time and produces waveforms to start and stop the sweep generator. Figure 3-6 shows a detailed block diagram of the A Sweep Generator circuit. The B Sweep Generator circuit is very similar to the A Sweep Generator; therefore, only the difference in operation associated with the B Sweep Generator will be discussed. A schematic of both circuits is shown on diagram 6 at the rear of this manual.

Disconnect Amplifier. After holdoff but before the next sweep, Disconnect Amplifier Q1024 conducts current through R1024 and the timing resistor R_t. This prevents timing current from charging the timing capacitance C_t. The positive-going sweep start gate from Q908 turns off Q1024 and the timing current now begins to charge the timing capacitance C_t.

Sawtooth Sweep Generator. Q1030 and Q1036 compose a Miller Integrator circuit. When the current flow through the Disconnect Amplifier is interrupted, the timing capacitance begins to charge through the timing resistor. The timing resistor and capacitance are selected by the A TIME/DIV switch to provide the various sweep rates listed on the instrument front panel. The output signal at the collector of Q1036 is a negative-going sawtooth waveform.

Output Buffer Amplifier. The Output Buffer Amplifier stage is a common-base amplifier with the signal current-driven into the emitter. It provides the output sawtooth current signal to the Horizontal Amplifier and provides a measure of isolation between the Sawtooth Generator and the Horizontal Amplifier. The HORIZ DISPLAY switch connects to this stage to control the A sawtooth output in the various horizontal modes of operation. In the A and A INTEN modes of operation, the A sweep signal passes through Q1038 to the Horizontal Amplifier. However, in the MIX an B DLY'D modes, −8 volts is connected to the emitter of Q1038 through CR1036 and R1036. This biases Q1038 off, preventing the A sawtooth signal from passing to the Horizontal Amplifier.

Sweep Start Amplifier. Just before the sweep starts to run down, the levels at the bases of Q1002A and B are approximately equal. When the sweep starts to run down, the base of Q1002B goes negative, which increases the forward bias on CR1004. This in turn decreases the forward

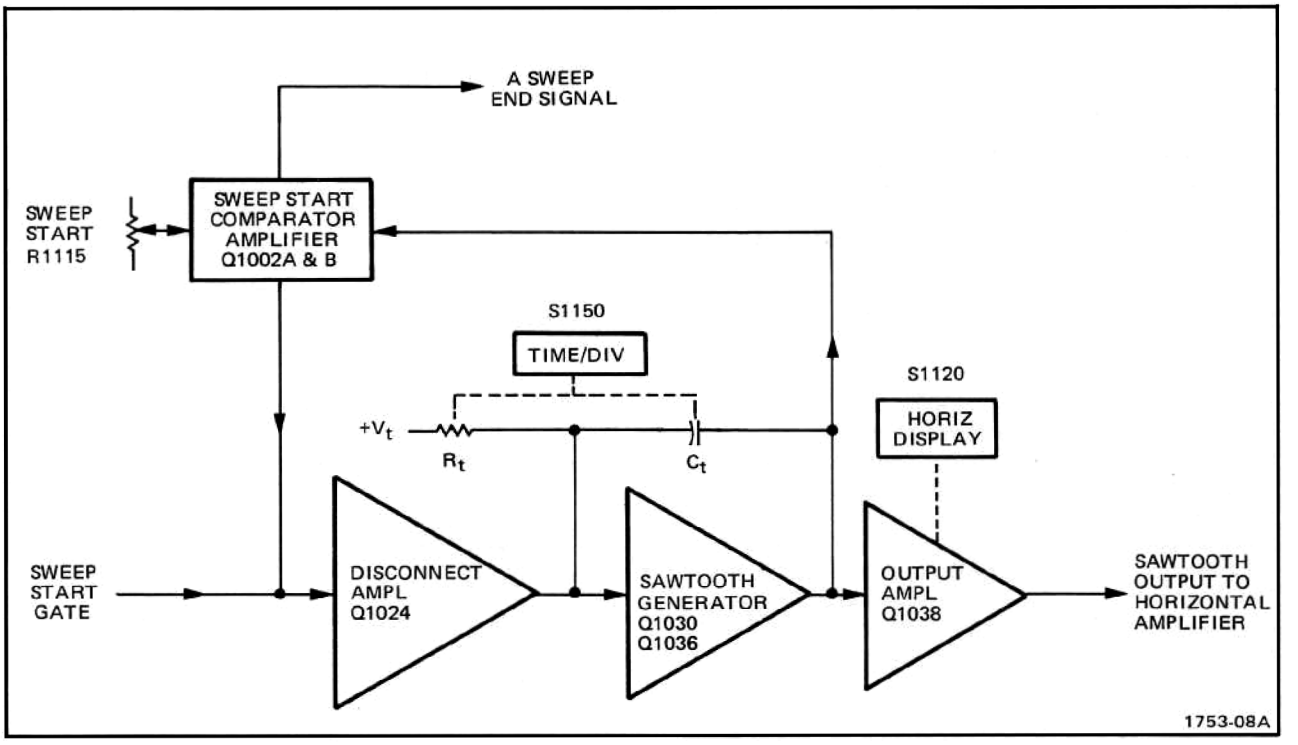

Fig. 3-6. Detailed block diagram of A Sweep Generator circuit.

http://manoman.sqhill.com

bias on CR1001, which, very shortly after the start of the sweep, becomes reverse biased to interrupt the current through Q1002A. The circuit remains in this condition until after the sweep retrace is complete. When the circuit returns to quiescence, Q1002A again begins to conduct through R1024. This sets the current through Q1024, which establishes the starting point for the sweep. The Sweep Start adjustment sets the base level of Q1002A. This level is also connected to the base of Q1062A in the MIX mode of operation. This ensures that B Sweep starts at the same level as A Sweep.

B Sweep Generator Differences. There are three prime differences between the A and B Sweep Generators. The B Sweep Output Buffer Amplifier is prevented from passing the B Sweep signal to the Horizontal Amplifier in the A and A INTEN positions of the HORIZ DISPLAY switch. There is a transistor stage connected as a constant current source in the emitter circuit of Q1062A and B (corrects for current imbalances side-to-side in Q1062 during MIX mode operation). The Sweep Start Level connected to the base of Q1062A is not always a fixed dc level. During MIX mode operation the A Sweep Sawtooth signal is applied to the base of the amplifier. Now, the dc level at which the B Sweep Generator will start generating its sawtooth waveform is constantly being changed by the A Sweep sawtooth. The output waveform from the B Sweep Generator takes the form of a composite sawtooth waveform, with the first and last parts occurring at a rate determined by the A Sweep Generator and the middle part occurring at a rate determined by the B Sweep Generator.

Sweep and Z Axis Logic Circuit

General. The Sweep and Z Axis Logic circuit derives the logic levels necessary to control the sequence of events associated with sweep generation and crt unblanking. The +A and +B GATE signals are also generated in this circuit. Positive logic terminology and symbology are used in the following explanation of circuit operation. A schematic of this circuit is shown on diagram 8 at the rear of the manual.

A Sweep Gate. Q904 and Q906 compose the A Sweep Gate circuit. They form an emitter coupled stage where only one transistor can be conducting at any time. The input signal to the stage is the positive-going trigger signal from the A Trigger Generator circuit. The signal at the collector of Q904 is connected to the A Sweep Z Axis Gate circuit to control crt blanking and to generate the +A GATE signal. The signal at the collector of Q906 is connected to the emitter of the Sweep Disconnect Amplifier stage (Q1024) in the A Sweep Generator circuit to initiate A Sweep generation.

B Sweep Gate. Q864 and Q866 compose the B Sweep Gate circuit. They also form an emitter-coupled stage where only one transistor can be conducting at any time. The input signal to the stage is the positive-going trigger signal from the B Trigger Generator circuit. The signal at the collector of Q866 is connected to the emitter of the Sweep Disconnect Amplifier stage (Q1084) in the B Sweep Generator circuit to initiate B Sweep generation.

Sweep Controlled Integrated Circuit. U980 is the Sweep Control Integrated circuit. Several functions are performed in this stage, depending on the mode of operation of the instrument sweep generators. The following is a brief explanation of the function associated with each pin of the IC.

PIN 1. This is the positive Auto Sense input. The signal connected here comes from pin 14 of U650.

PIN 2. This is the negative Auto Sense input. A fixed dc level established by R981 and R982 is connected here.

PIN 3. This is the + auto gate terminal. In the AUTO mode of operation, if no trigger signals are applied to pin 1 of U980 during the ≈100 ms following the end of holdoff the gate level at pin 3 steps LO to turn Q906 on, which initiates a sweep.

PIN 4. This is the − auto gate terminal.

PIN 5. Input terminal for negative voltage supply.

PIN 6. This is the auto gate timing terminal. R944 and C944 determine the amount of time between the end of holdoff and the generation of the auto gate.

PIN 7. This terminal lights the TRIG'D indicator when a triggered gate has occurred.

PIN 8. This is the holdoff timing terminal. The R/C connected to this terminal (selected by the TIME/DIV switch) determines the length of holdoff time.

PIN 9. Ground terminal.

PIN 10. This is the Holdoff output terminal. The gate level present here is LO during sweep holdoff time and HI otherwise.

PIN 11. This terminal lights the READY indicator when operating in the single sweep mode.

http://manoman.sqhill.com

PIN 12. This is the single sweep mode terminal. When +5 volts is applied to this terminal, the sweep operates in the single sweep mode; when the terminal is left open or grounded, the sweep operates in the repetitive mode.

PIN 13. This pin is used for the FAST storage mode. When +5 volts is applied here, the sweep operates in a mode similar to single sweep. However, the sweep is reset automatically when a signal from the storage circuit allows pin 18 to go LO.

PINS 14 & 15. Single sweep reset terminals. Pushing the PUSH TO RESET button prepares the single sweep circuitry to respond to the next one triggering event. Also causes the READY indicator to be lit.

PIN 16. This is the holdoff start input terminal. The HI sweep reset gate pulse from the sweep generators is applied here to initiate sweep holdoff.

PIN 17. This is the sweep disable output terminal. The gate level at this terminal is HI during holdoff and LO otherwise.

PIN 18. Sweep lockout input. +5 volts applied to this terminal disables all sweep action.

PIN 19. Auto mode terminal. Grounding this terminal enables auto sweep operation.

PIN 20. Input terminal to positive voltage supply.

A Sweep Holdoff Amplifier. The A Sweep Holdoff Amplifier is Q954. The holdoff gate waveform from U980 pin 17 is applied to the emitter of Q954 through CR961. When Q954 is turned off (during holdoff time), its collector is HI, thus placing a HI on the A Trigger Generator reset input (diagram 5). When U980 pin 17 goes LO at the end of holdoff time, Q954 is biased on, and its collector voltage goes LO to remove the reset level from the A Trigger Generator IC, U650. Once the reset level has been removed, the IC is allowed to respond to the next adequate triggering signal.

B Sweep Holdoff Amplifier. The B Sweep Holdoff Amplifier is Q844. Its circuit action is controlled both by the holdoff gate from U980 pin 17 (through CR946) and the collector current of Q834 in the Delay Pickoff Comparator. Both control sources must be in their LO state for the B Trigger Generator reset level to be removed. Either source in its HI state will keep Q844 biased off to hold a HI on the reset input of B Trigger Generator U550.

Delay Pickoff Comparator. A circuit composed of Q820, Q822, Q824, and Q834 is used to compare the A Sweep ramp voltage with the level set by the DELAY TIME POSITION potentiometer, R1116.

When B Sweep is enabled, Q822 is biased to supply a constant current to Q820. At the start of an A Sweep, the right half of Q820 is biased on, and the left half, with the level from the DTP control, is off. At the point that the A Sweep ramp runs down to meet the level from the DELAY TIME POSITION control, the left half of Q820 becomes forward biased and the right half turns off. Transistor Q834, in the collector circuit of the right side of Q820, will turn off and allow the emitter of Q844 to go LO. The reset level is removed from the B Trigger Generator when Q844 conducts, and the B Sweep either will start immediately if the STARTS AFTER DELAY B Trigger SOURCE is selected or will start when the next triggering signal occurs when any other B Trigger SOURCE is selected.

Logic Multivibrator. Q926 and Q924 compose a multivibrator. At quiescence, Q924 is conducting and Q926 is turned off. When the sweep starts to run, the negative-going ramp is coupled through the base of Q1002B (A and B Sweep Generator circuit) and CR1004 to the cathode of CR1011. CR1011 becomes forward biased and when the level at the anode of CR1011 falls to about +4 V, Q926 conducts and Q924 turns off. The multivibrator remains in this state until the sweep starts to retrace and the voltage level at the anode of CR1011 rises above about +4.5 V. The resultant pulse at the collector of Q926 is applied to Sweep Control IC U980 to terminate the sweep. The pulse at the collector of Q924 is applied to the A Sweep Z-Axis Gate to blank the crt at the end of the sweep.

A Sweep Z-Axis Gate. Q912 and Q914 compose the A Sweep Z-Axis Gate. They form an emitter-coupled stage where only one transistor can be conducting at any given time. The controlling signal inputs come from the collector of Q904 in the A Sweep Gate, the blanking signal from Q924 in the A Sweep Generator, and Q886 in the B Latch Multivibrator (only in the MIX mode of operation). The blanking signal for use in the Z-Axis Amplifier is taken from the collector of Q914. The collector signal of Q912 is applied to the +A GATE Emitter Follower.

In all positions of the HORIZ DISPLAY switch except for B DLY'D, −8 V is connected to the cathode of CR896. This pulls the anode of CR895 down very close to −8 V, causing it to be reverse biased, which in turn allows the gate signal

http://manoman.sqhill.com

at the collector of Q914 to pass to the Z-Axis Amplifier. In the B DLY'D position of the HORIZ DISPLAY switch, −8 V is no longer connected to CR896. This allows CR895 to be forward biased, which blocks the A blanking signal from passing through Q914 to the Z-Axis Amplifier.

In all positions of the HORIZ DISPLAY switch except MIX, −8 V is connected to the cathode of CR887. This keeps CR888 reverse biased and prevents the collector signal of Q884 from affecting the A Sweep Z-Axis Gate. However, in the MIX position of the HORIZ DISPLAY switch, −8 V is no longer connected to CR887. Now, when the B Sweep ends and sets the B Sweep Latch circuit, the collector signal of Q884 (through CR888) switches the A Sweep Z-Axis Gate, causing the crt display to be completely blanked. This prevents any further display of A Sweep in the MIX mode, even though A Sweep may still be running.

B Sweep Z-Axis Gate. Q852 and Q854 compose the B Sweep Z-Axis Gate. They form an emitter-coupled stage where normally one transistor is on and the other is off. The controlling signal inputs come from the collector of Q864 in the B Sweep Gate and the blanking signal from Q874 in the B Sweep Generator. The blanking signal for use in the Z-Axis Amplifier is taken from the collector of Q852 (through CR894). The collector signal of Q854 is applied to the +B GATE Emitter Follower.

In the A position of the HORIZ DISPLAY switch, −8 V is applied to the cathode of CR893, which causes CR892 to be back biased. The collector of Q852, pulled positive through R851 and CR851, back biases CR894, preventing the B Sweep Z-Axis Gate from affecting crt unblanking. In the MIX and A INTEN positions of the HORIZ DISPLAY switch, −8 V is removed from the cathode of CR893 and applied to the cathode of CR821. This forward biases CR892 and reverse biases CR851. CR894 is still reverse biased, but when B Sweep starts, the collector of Q852 steps negative enough to forward bias CR894 and add a slight amount of unblanking to the A Sweep unblanking already present. This provides a measure of intensification for the B Sweep portion of an A INTEN or MIX display. In the B DLY'D position of the HORIZ DISPLAY switch, −8 V is applied to the cathodes of CR821 and CR893. This reverse biases both CR892 and CR852, which allows the full B Sweep unblanking signal to pass through CR894. Since the A Sweep Z-Axis Gate output diode CR896 is held reverse biased, the only unblanking signal present at the input to the Z-Axis Amplifier will be the B Sweep signal.

+A Gate and +B Gate Emitter Followers. Q916 and Q856 are emitter followers providing the +A GATE and +B GATE output signals available at the instrument rear panel. The output signals are positive-going rectangular waveforms, approximately 5.5 V in amplitude. The amplitude is set in the collectors of Q912 and Q854. For example, when Q912 is conducting, the base of Q916 can go no more negative than approximately −0.7 V (limited by CR912). When Q912 is not conducting, the base of Q916 rises to the decoupled +5 V power supply level through R914. CR916, CR917, CR857, and CR858 provide protection against accidental application of damaging voltage levels to the +A GATE and +B GATE output connectors.

B Sweep Latch. Q882 and Q884 form the B Sweep Latch. Quiescently (before either the A or B Sweeps have reached their maximum amplitudes), both transistors are off. Then, the sweep reset pulse from whichever sweep terminates first will be applied to the base of Q882 (A Sweep reset through CR882; B Sweep reset through CR874). The positive-going reset pulse turns on Q882 and the negative-going movement at its collector turns on Q884. The collector of Q884 in turn pulls up on the base of Q882, holding Q882 on, which causes the circuit to stay in its on or latched state. The HI at the collector of Q884 is applied to the base of the B Sweep Holdoff Amplifier (through CR885) to disable the B Trigger Tunnel Diodes. In the B ENDS A position of the A TRIG HOLDOFF control, the HI is also applied to the holdoff start input terminal of the Sweep Control IC through C947. Thus, when B Sweep ends, A Sweep ends also.

The B Latch Multivibrator is reset to its quiescent state by the LO Holdoff level present at pin 10 of the Sweep Control IC during A Sweep holdoff.

Horizontal Amplifier

General. The Horizontal Amplifier circuit provides the output signals to the crt horizontal deflection plates. The signal applied to the input of the Horizontal Amplifier is determined by the TIME/DIV switch. The signal can be a sawtooth waveform generated within the instrument, or some external signal applied to the CH 1 or X input connector (X-Y mode of operation). The Horizontal Amplifier also contains the X10 magnifier, horizontal positioning, and some beam finder circuitry . Figure 3-7 shows a detailed block diagram of the Horizontal Amplifier circuit. A schematic of this circuit is shown on diagram 9 at the rear of this manual.

X-Axis Amplifier. In all positions of the TIME/DIV switches except X-Y, the input signal to the base of Paraphase Amplifier Q1232 is the sawtooth waveforms from the sweep generators. In the X-Y mode, however, the sweeps are disabled and the signal applied to Q1232 comes from the Channel 1 Preamp via the X-Axis Amplifier stage. This stage includes Q1212, Q1222, and their associated circuitry.

Q1212 is connected as a feedback amplifier with R1216 as the feedback element. The input resistance is made up of

http://manoman.sqhill.com

R1212 and the X-Axis gain-setting adjustment R1214. When not operating in the X-Y mode, the base of Q1212 rises toward the +15 V supply, but is clamped at approximately +4 V by the divider action of R1218 through CR1218. This reverse biases the base-emitter junction of Q1212. The base of Q1222 also rises to approximately +4 V. With the junction of R1205-R1222 at approximately 0 V, Q1222 is biased off.

When the TIME/DIV switches are set to the X-Y position (full counterclockwise), −8 V is applied to the junction of R1215 and R1217. Also, +5 V is applied to the emitter circuit of Q1222 through CR1205. This biases the Z-Axis Amplifier circuit into conduction. At the same time, +5 V is applied to the Channel 1 Scale-Factor Switching Amplifier circuit (through CR1202) and to R984 on diagram 8. This enables both scale-factor indicating circuits at the same time and disables sweep generation.

Input Paraphase Amplifier. Q1232 and Q1242 compose the Input Paraphase Amplifier. This is an emitter-coupled amplifier stage that converts the single-ended input signal to a push-pull output signal. The signal at the collector of Q1232 is opposite in phase to the input signal. The signal at the collector of Q1242 is in phase with the input signal. Thermistor RT1243 reduces in value with increases in ambient temperature to increase the gain of the stage. This compensates for changes in amplifier gain that occur as operating temperatures vary. R1227A and R1227B are the Horizontal POSITION and FINE controls, respectively. The FINE control has approximately one-tenth the range of the POSITION control and provides fine adjustment of a magnified display.

Gain Setting Amplifier. Q1236 and Q1246 are an emitter coupled push-pull amplifier stage. The gain of the Horizontal Amplifier is controlled by adjusting the resistance connected between the emitters of this stage. The X1 Gain adjustment R1257 adjusts unmagnified horizontal gain and the X10 Gain adjustment R1253 adjusts magnified horizontal gain. Magnifier Registration adjustment, R1255, balances quiescent dc current in Q1236 and Q1246 so that a center screen display does not change position when the X10 Magnifier is turned on.

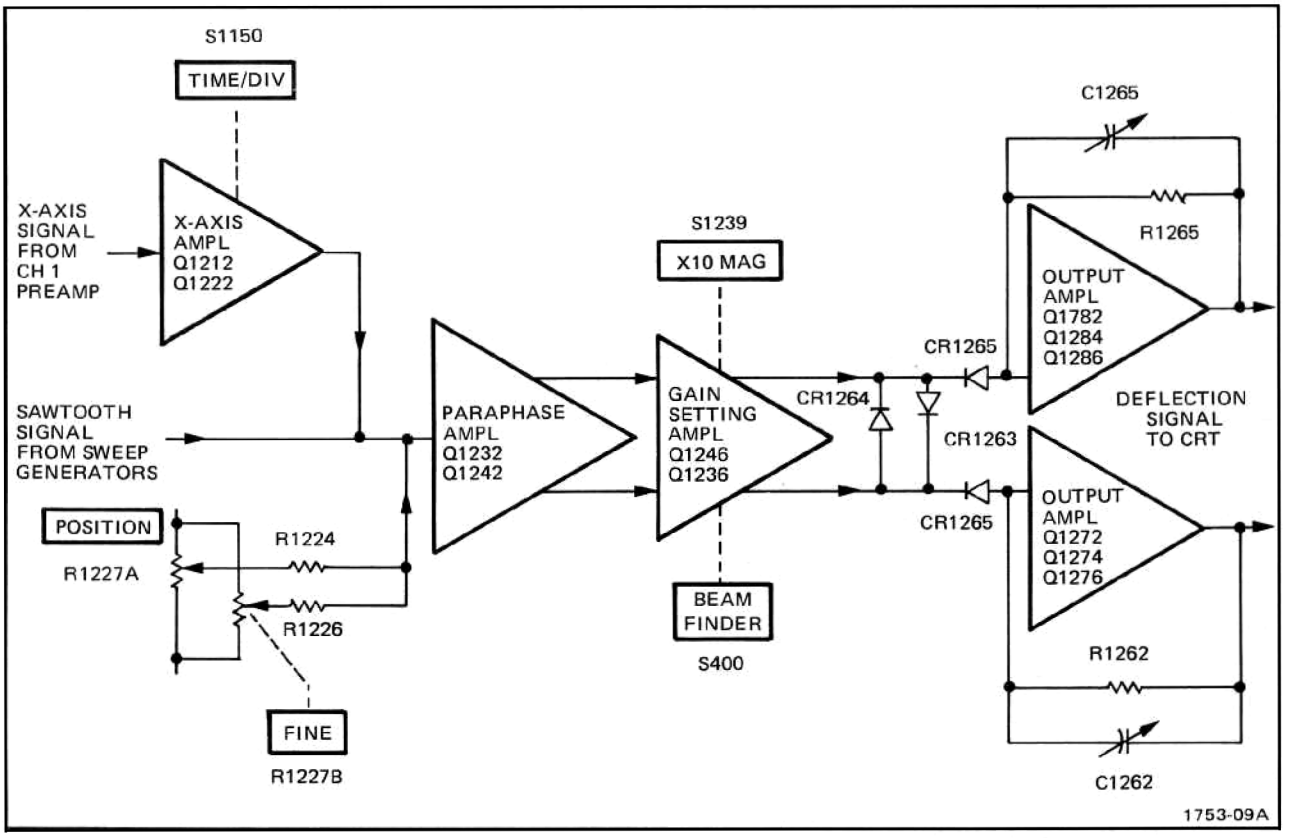

Fig. 3-7. Detailed block diagram of Horizontal Amplifier circuit.

http://manoman.sqhill.com

When the BEAM FINDER pushbutton is pressed, R1266 and R1267 are connected to +65 V. This causes the Horizontal Amplifier to operate close to the point where signal limiting occurs, thereby ensuring that an overscanned display will remain within the crt viewing area.

Output Amplifier. The push-pull signal from the Gain Setting Amplifier is connected to the Output Amplifier through CR1262 and CR1265. Each half of the Output Amplifier can be considered as a single-ended feedback amplifier, which amplifies the signal current at the input to produce a voltage output to drive the horizontal deflection plates of the crt. The amplifiers have a low input impedance and require very little voltage change at the input to produce the desired output change. The Output Amplifiers are limited from overdrive by CR1263, CR1264, CR1262, and CR1265. The input diodes CR1262 and CR1265 become back-biased when the signal level at either input becomes too positive and the diodes connected back to back between the two signal paths ensure that the signal amplitude side to side will be limited to a maximum of about 0.7 V.

Transistors Q1272 and Q1282 are inverting amplifier stages whose collector signals drive the emitter of complementary amplifiers Q1274-Q1276 and Q1284-Q1286 respectively. C1281, C1272, and C1283 provide a signal path for fast ac signal currents. R1262-R1263 and R1264-R1265 are the feedback elements in the amplifier with C1262-C1263 and C1264-C1265 providing high-frequency compensation. The output signal from Q1274-Q1276 drives the right crt deflection plate, while the signal from Q1284-Q1286 drives the left.

CALIBRATOR

General

The Calibrator circuit produces a square-wave output signal with accurate voltage and current amplitudes. This output is available as a voltage or current at the CALIBRATOR current loop on the instrument rear panel.

Multivibrator

Q1362 and Q1372 along with their associated circuitry compose an emitter-coupled astable multivibrator. The basic frequency of the multivibrator is approximately 1 kHz and is essentially determined by the RC combination of C1364, R1364 and R1372. Q1362 and Q1372 alternately conduct, producing a square-wave output signal, which is taken from the collector of Q1372.

Output Amplifier

The output signal from the Multivibrator overdrives Output Amplifier Q1376 to produce an accurate square wave at the output. When the base of Q1376 goes positive, it is cut off and the collector level drops to ground. When the base goes negative, Q1376 is biased into saturation and its collector rises positive to about +5 V. Amplitude adjustment R1375 adjusts the resistance between the collector of Q1376 and ground to determine the amount of current allowed to flow, which in turn determines the voltage developed across R1377.

LOW-VOLTAGE POWER SUPPLY

General

The Low-Voltage Power Supply provides the operating voltages for the circuitry in this instrument from six regulated supplies. Electronic regulation is used to provide stable, low-ripple output voltages. A schematic of this circuit is shown on diagram 11 at the rear of this manual.

Power Input

Power is applied to the primary of transformer T1701 through Line Fuse F1701, POWER switch S1701, Thermal Cutout S1702, Line Voltage Selector switch S1703, and the Regulating Range Selector Assembly. Line Voltage Selector switch S1703 connects the split primaries of T1701 in parallel for 115 V nominal operation and in series for 230 V. Line Fuse F1701 should be changed to the correct value to provide the correct protection for each nominal line voltage (current rating fuse for 230 V operation is one-half the 1.5 A fuse rating for 115 V).

The vacant windings between pins 10, 11, 12, 13 and 14 of T1701 are intended for use with either a DM-series Digital Multimeter or the optional Inverter Circuit Board (Option 07). Option 07 allows the instrument to be operated from an external dc power source or an 1106 Power Supply (see Option section). The instrument cannot be equipped with Option 07 and a DM-series Digital Multimeter at the same time.

Secondary Circuit. The −8 V, +5 V, −15 V, +15 V and +65 V supplies are series-regulated. U1724A and B and U1762A and B are high-gain amplifier cells with differential inputs. These amplifiers monitor voltage variations in the output voltages.

The +65 V supply uses zener diodes VR1726 and VR1724 as its reference and is adjustable by a calibration control, R1736. All supplies are referenced to the +65 V

http://manoman.sqhill.com

supply. The +140 V regulated supply is stacked on top of the +65 V supply via 75 V zener diode VR1718.

C1743, C1744, and R1743 compose a wave-shaping circuit that provides a sample of the ac voltage present in the secondary of T1701 to the trigger circuitry for use in the LINE position of the A Trigger SOURCE switch.

FAN MOTOR CIRCUIT

The fan motor used in the 466 is a brushless dc motor using Hall Effect devices. The fan motor control circuit varies the speed of the fan as the operating temperature changes.

Two Hall Effect devices inside the motor, and four transistors U8061A, B, C and D compose a sine-wave generator to drive the motor windings. Each of the four transistors is controlled by one-half of a Hall element to generate one-quarter of the sine-wave cycle.

As the ambient temperature increases, the value of thermistor RT8038 decreases. This biases Q8067 on harder to conduct more current through the Hall devices and turn the motor winding control transistor on harder.

Z AXIS/CRT CIRCUIT

General

The CRT circuit provides the voltage levels and control circuits necessary for operation of the cathode-ray tube except for storage functions. Figure 3-8 shows a detailed block diagram of this circuit. The schematic of this circuit is on diagram 10 at the rear of the manual.

High Voltage Oscillator

Q1486 and its associated circuitry compose the high-voltage oscillator that produces the drive for the high-voltage transformer, T1501. When the instrument is turned on, current through Q1484 provides forward bias for Q1486. Q1486 conducts and as its collector current increases, a voltage develops across the collector winding of T1501. This produces a corresponding voltage increase in the feedback winding of T1501, which is connected to the base of Q1486, reinforcing the drive on Q1486. Eventually, the rate of collector current increase in Q1486 becomes less than that required to maintain the voltage across the transformer winding and the output voltage drops. This turns off Q1486 by way of the feedback voltage to the base.

The voltage waveform at the collector of Q1486 is a sine wave at the resonant frequency of T1501. Q1486 remains off during the negative half cycle while the field collapses in the primary of T1501. When the field is collapsed sufficiently, the base of Q1486 becomes forward biased into conduction again, and the cycle repeats.

The amplitude of sustained oscillation depends on the average current delivered to the base of Q1486. The oscillator frequency is approximately 50 kHz. Fuse F1487 protects the +15 V supply if the High Voltage Oscillator circuit becomes shorted. C1487 and L1487 provide decoupling from the +15 V, unregulated supply.

High-Voltage Regulator

Feedback from the crt cathode supply is applied to the base of Q1472 through R1525D. Any change in the level at the base of Q1472 produces an error signal at the collector of Q1472, which is amplified by Q1476 and Q1484 and applied to the base of Q1486 through the feedback winding of T1501.

If the output voltage at the high voltage test point (TP1443) starts to go less negative, this positive-going change is applied to the base of Q1472. Q1472 conducts harder, which in turn, causes Q1476 and Q1484 to conduct harder. This results in greater bias current to the base of Q1486 through the feedback winding of T1501. Now, Q1486 is biased closer to its conduction level so that it comes into conduction sooner to produce a larger induced voltage in the secondary of T1501. This increased voltage appears as a more negative voltage at TP1443 to correct the original positive-going change. By sampling the output from the crt cathode supply in this manner, the total output of the High-Voltage Supply is held relatively constant.

The Reduced Scan Horiz Cal (R1464), which controls Reduced Scan sweep calibration, is only effective when the REDUCED SCAN switch is pulled on. See description of Reduced Scan control circuit.

Over-Current Protection, Q1492 and Q1496

In some extreme cases, the crt beam current could increase enough to damage the crt meshes. The Over-current Protection circuit at pin 6 of the crt will prevent this current from going beyond about 1 mA.

The current at pin 6 of the crt represents approximately 90% of the total crt cathode current. As the current through pin 6 approaches a level representing a cathode current of approximately 1 mA, the voltage level at the base of Q1496

http://manoman.sghill.com

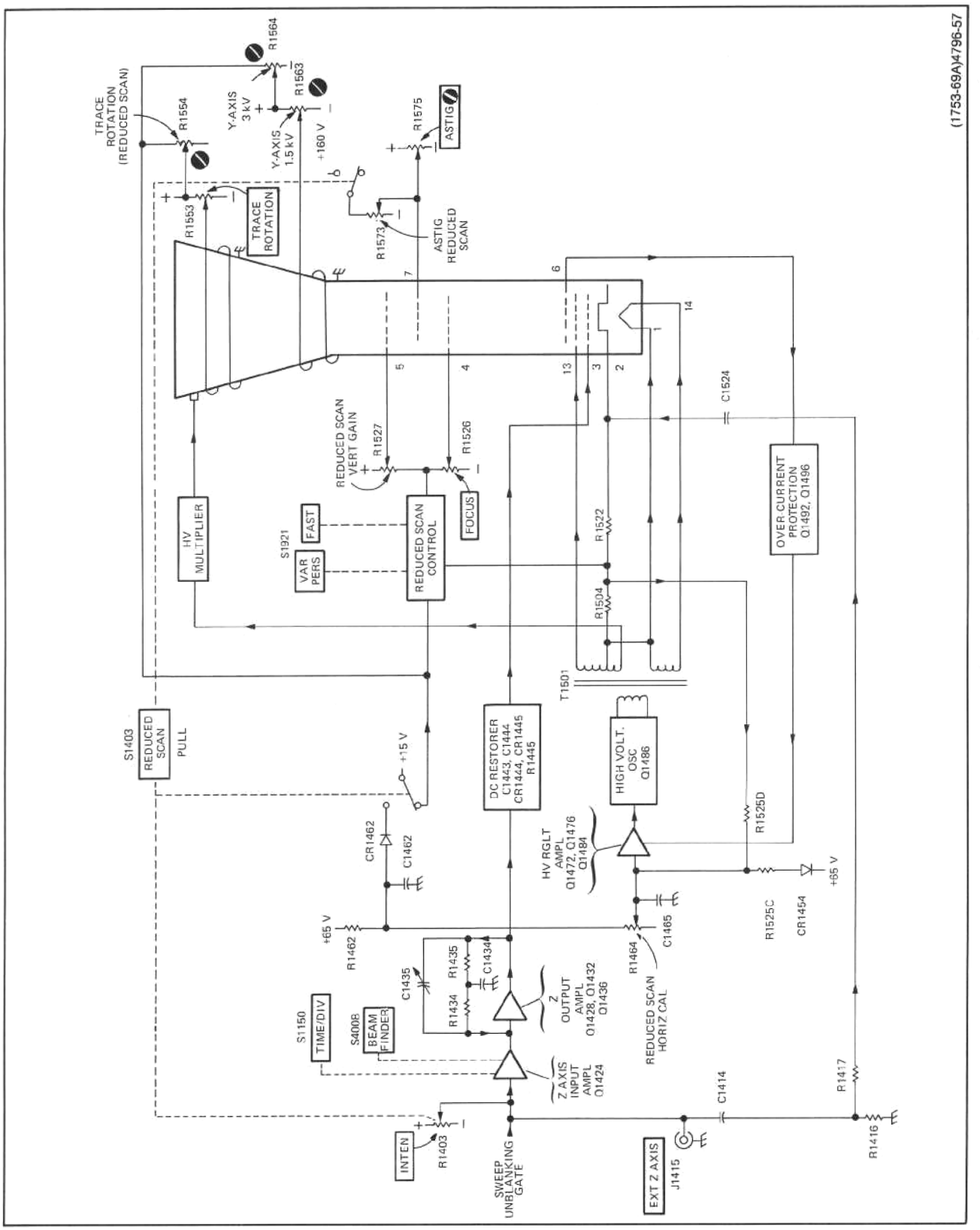

Fig. 3-8. Detailed block diagram of Z-Axis/CRT circuit.

http://manoman.sqhill.com

turns it on. Normally, Q1496 and Q1492 are biased off. When Q1496 turns on, Q1492 is biased into conduction, which starts to reduce the base drive applied to Q1484 and prevents the oscillator amplitude from increasing. This prevents the crt cathode current from increasing above approximately 1 mA.

High-Voltage Rectifiers and Output

The high-voltage transformer T1501 has three output windings, one for the crt filament voltage, one that provides +600 V for the storage circuitry, and one that supplies the crt cathode and anode voltages. The filament winding is elevated to the level of the cathode supply to prevent cathode-to-filament breakdown. A zener regulated dc voltage is used for the crt filament because the high-voltage transformer secondary varies considerably due to changing loads of the storage crt. The crt grid bias voltage is derived by a dc restorer circuit that uses a sample of the signal in the high-voltage winding in conjunction with dc levels supplied by the Z-Axis Amplifier and the voltage level set by the grid bias potentiometer.

The positive accelerating potential is supplied by the High Voltage Multiplier circuit. The regulated output voltage is approximately 7000 V.

The negative cathode potential is supplied by half-wave rectifier CR1503. The voltage output depends on which storage and scan mode is chosen. See Reduced Scan circuit description.

Z-Axis Amplifier

The Z-Axis Amplifier circuit controls the crt intensity level from several inputs. The effect of these input signals is to either increase or decrease the trace intensity, or to completely blank portions of the display. The input transistor Q1424 is a current-driven, low input impedance amplifier. It provides termination for the input signals as well as isolation between the input signals and the following stages. The current signals from the various control sources are connected to the emitter of Q1424 and the algebraic sum of the signals determines the collector conduction level.

Q1428, Q1432, and Q1436 compose a feedback amplifier stage; R1434 and R1435 are the feedback elements. C1434 and C1435 provide high-frequency compensation. Q1428 is an emitter follower providing drive to complementary amplifier Q1432-Q1436. CR1425, CR1432, and CR1439 provide protection in the event of high-voltage arcing.

In the .1 s, .2 s, .5 s, and X-Y positions of the TIME/DIV switch, +5 V is connected to the anode of CR1401. This limits the effective range of the INTENSITY control to reduce the unblanking capabilities of the amplifier, thereby reducing the possibility of inadvertently burning the crt phosphor.

The BEAM FINDER switch has two actions on the Z-Axis circuitry. In the normal (button out) condition, the first section of S400 is open to CR1405, allowing Q1424 to conduct. The second section of S400 forward biases CR1427 by applying vertical amplifier emitter current. As a result CR1427 clamps the junction of R1425-R1427 near ground, which permits the INTEN potentiometer and the unblanking signals to set the intensity of the display.

When the BEAM FINDER button is pressed, the first section of S400 applies +65 V to the anode of CR1405, which brings the emitter of Q1424 sufficiently positive to cut off conduction through Q1424. The second section of S400 opens and removes the forward bias from CR1427, which opens and no longer clamps the R1425-R1427 junction. The −8 V at the bottom of R1427 moves the Q1428 base negative, thus establishing a fixed unblanking level at the output of the Z-Axis Amplifier. The foregoing action provides a visible display even though it might otherwise be blanked or unintensified.

C1414 is a high frequency bypass to the crt cathode from the EXT Z AXIS input.

DC Restorer Circuit

C1443, C1444, CR1442, CR1444, CR1445, CR1452, and R1445 form a dc restorer circuit. All dc levels in this circuit are referenced to the negative potential of the crt cathode. The voltage difference across R1445 approximately equals the voltage swing present at the junction of CR1442 and CR1452. The control end of R1445 is more negative than the end connected to CR1445. The amplitude of the voltage swings at the junction of CR1442 and CR1452 is determined by the voltage levels established by the Z-Axis Amplifier circuit and the CRT Bias adjustment circuit. CR1452 sets the limit of the positive excursion and CR1442 sets the limit of the negative excursion.

CRT Control Circuits

Focus of the crt display is controlled by FOCUS control, R1526. The Focus Tracking control, R1529, located in series with the FOCUS control, is ganged with the INTEN control to reduce focus variations when changing intensity setting. ASTIG adjustment R1575, which is used in conjunction with the FOCUS control to provide a well-defined display, varies the positive level on the astigmatism grid. Geometry adjustment R1556 varies the positive level on the horizontal deflection plate shields to control the overall geometry of the display.

http://manoman.sqhill.com

The Y Axis adjustment controls the trace alignment by varying the magnetic field around the crt. R1563 controls the current through L1561, which affects the crt beam after vertical deflection, but before horizontal deflection. Therefore, it affects only the vertical (Y) components of the display. TRACE ROTATION adjustment, R1553, controls the current through L1551 and affects both vertical and horizontal rotation of the beam. R1554, Trace Rotation (Reduced Scan), R1564, Y-Axis (Reduced Scan) and R1573, Astig (Reduced Scan) become active only when in the REDUCED SCAN mode.

Reduced Scan Control Circuit

When the INTENSITY control is pulled for the REDUCED SCAN mode, several controls are switched in and the crt cathode supply voltage is approximately doubled.

The following calibration adjustments are active only in the REDUCED SCAN mode: R1464, Reduced Scan Horiz cal; R1527, Reduced Scan Vert Gain; R1554, Trace Rotation (Reduced Scan); R1564, Y-Axis (Reduced Scan) and R1573 Astig (Reduced Scan).

The voltage between pins 2 and 13 of the crt is kept constant when switching between Full Scan and Reduced Scan; this keeps the crt grid-voltage cutoff constant. In the Full Scan mode, pin 13 of the crt is at about +65 V as set by CR1507 and R1507. Pin 2 of the crt is at about −1470 V (in the NON STORE mode). When the REDUCED SCAN knob is pulled, +15 V is applied to relay coil L1501, which closes S1501 and adds CR1506 to the rectifier circuit. This causes the voltage at pin 2 of the crt to go to approximately −3010 V (in the NON STORE mode).

When +15 V is applied to the cathode of CR1462, R1464 assumes control of the base of Q1472. The voltage at the top of R1464 gradually goes to +15 V as C1462 becomes charged.

In the Full Scan mode, there is about 3 V across R1527, established by VR1532 and VR1527. In the REDUCED SCAN mode, +15 V is removed from the cathode of VR1532 and the lower side of R1527 is allowed to go to about −158 V, making the Vert Cal Reduced Scan control active.

R1554 and R1564 are activated in the REDUCED SCAN mode when +15 V is connected to them. At the same time +15 V is removed from R1553 and R1563.

R1573 is added to the ASTIG circuit in the REDUCED SCAN mode when S1403B switches +160 V to the top of R1573.

To keep the calibration correct when changing from NON STORE to VAR PERS or FAST storage modes, it is necessary to change the crt cathode voltage (see Table 3-1). This is accomplished by taking current out of the summing node at the base of Q1472 through R1502 from the junction of R1542 and R1543.

Table 3-1
CRT CATHODE VOLTAGES

	Non Store	Var Pers	Fast
Full Scan	−1470 V	−1460 V	−1445 V
Reduced Scan (approximate)	−3010 V	−2990 V	−2960 V

When switching from Full Scan to Reduced Scan, the voltage at the anode of CR1536 goes from +0.6 V to approximately −0.6 V in Non Store. CR1543 turns on, due to current flow through R1532, VR1533, VR1532, and R1525. When switching to VAR PERS, the voltage at the anode of CR1536 goes more negative, drawing current through R1532, R1542, and R1502. R1543 and R1547 are also drawing current through R1502. In FAST mode, −15 V is also applied to R1543 directly, drawing current through it and through R1502.

C1462 and C1465 are in the circuit to prevent bright flashes on the crt when changing between Full Scan and REDUCED SCAN.

The voltage/temperature characteristics of CR1466 and CR1462 help you keep the high voltage constant with temperature changes.

STORAGE CIRCUITS

General

The Storage circuits, located on the Storage board, supply timing pulses and voltage levels to control the Image Transfer Storage crt in the Variable Persistence and Fast storage modes.

When the Fast mode is selected, the TRIG MODE switch is disabled and the instrument operates in a single sweep mode controlled by the Storage circuit. When the display is either manually or automatically erased, the Fast storage mode cycle occurs as follows:

a. The sweep generators are disabled for approximately 1.25 seconds while the storage meshes are prepared to accept and store a display.

http://manoman.sqhill.com

b. Then, the sweeps are unlocked and a single sweep is allowed to run when a trigger is present.

c. The waveform present during this sweep is stored on the Fast Mesh and then transferred to the Front Mesh for viewing.

The length of time that the stored display will remain on the screen is determined by the setting of the VIEW TIME control. In the FAST mode, this control sets the time between automatic erasures. A detent in the MAX position disables the automatic feature allowing the display to be erased only by pressing the ERASE pushbutton.

In the Variable Persistence mode, the display is stored directly on the Front Mesh for viewing. The Front Mesh is then pulsed with erase pulses. The persistence of the display is variable with the VIEW TIME control.

The Save mode can be used to extend the display retention capabilities of the instrument. When the SAVE pushbutton is engaged, the automatic/manual erase circuit is disabled, and the brightness of the stored display is controlled by the SAVE INTEN control. The stored viewing time is inversely proportional to save intensity and can be greatly extended when using reduced intensity in the Save mode.

Multiple traces can be stored in the Fast storage mode. After a first trace is captured and stored, pushing the SINGL SWP will initiate a second storage cycle. The second trace will simply be added to the display. This procedure can be repeated several times to obtain several traces on the screen.

Storage Logic Circuit

Figures 3-9A and B are timing diagrams of the signals developed by the Storage Logic circuit, Diagram 12; Fig. 3-10 is a Storage Logic block diagram.

In the following description of the Storage Logic circuitry, assume that the storage circuit is operating in the FAST mode and the automatic erase oscillator, Q1832 and Q1834, is disabled by the VIEW TIME control (fully clockwise and S1815A closed).

When the ERASE pushbutton is pushed, unijunction transistors Q1836 and Q1838 are turned on. Since C1835 is a smaller value than C1834, Q1838 turns on first and supplies a pulse that clears the shift register (U1874A, B and U1878) through U1866C. After the shift register is cleared, Q1836 supplies a pulse through U1866A and U1872C that clocks the shift register.This clock pulse causes the $\overline{Q}$ output of U1874A to go low and turn off Q1872. When Q1872 is turned off, Q1864 (a relaxation oscillator) is permitted to turn and supply clock pulses to the shift register at a 250 ms rate. On the fifth clock pulse from Q1864, the $\overline{Q}$ output of U1874A goes high, turning Q1872 on, which disables the clock. When the $\overline{Q}$ output of U1874A went high, the Q output went low; the Q output is fed back to the sweep lockout circuit to enable the sweep. When the sweep ends, pin 5 of U1866B goes high, both inputs to U1866D become low, producing a clear pulse to the shift register through U1866C. Figure 3-9A is a timing diagram of the shift register outputs.

The outputs of the shift register are used to generate the storage logic output signals. Some of these signals correspond to the shift register outputs, others are derived from these outputs. The storage logic output signals are used to control the storage amplifiers and to enable the sweep. The following signal descriptions describe the signals that are derived from or gated with the shift register output signals (Fig. 3-9B).

G Signal: The G signal is generated by U1846B. U1846B is triggered by the clock pulse from Q1836 when the ERASE button is pushed, and again by the $\overline{E}$ output when the shift register is cleared at the time the sweep ends. Each time U1846B is triggered, it generates a positive-going pulse that is 100 ms in duration.

J Signal: The J signal is the output of U1876B. In the FAST mode, the outputs of U1872A and U1876C remain in the high state; therefore the J signal is the same as the $\overline{B}$ output of the shift register.

K Signal: The K signal is generated by the G signal being gated (by U1872D) with the $\overline{A}$ output of the shift register. During the time of the first G pulse the $\overline{A}$ output is low, therefore the output of U1872D remains high; at the time of the second G pulse, the $\overline{A}$ output is high and a negative-going, 100 ms pulse is generated at the output of U1872D.

I Signal: The I signal is formed by the K pulse and the output of U1846A being gated by U1876D. U1846A is being triggered continuously by Q1842; during the time that the shift register C output is low, CR1848 is forward biased and the timing current for U1846A is shunted away from U1846A. This causes pin 13 of U1846A to be high; since both inputs to U1876D are high, the output is low. When the C output of the shift register goes high, CR1848 is reverse biased and pin 13 of U1846A goes low; the output of U1846A is now 100 Hz, 2 μs pulses. This signal is gated through U1876D. When the shift register is cleared, the C

http://manoman.sqhill.com

output goes low and forward biases CR1848, which disables the output of U1846A. At this time the K pulse goes low and extends the I signal by 100 ms.

L Signal: This signal is generated by Q1842, a 100 Hz oscillator.

M Signal: This signal is generated by Q1852, a 5 kHz oscillator. The 5 kHz oscillator is synchronized to the 100 Hz oscillator by C1842.

VAR PERS Mode. The shift register operates the same in the variable persistence mode as it does in the FAST mode except that it is cleared on the third clock pulse from Q1864. Pin 6 of U1866B is held high by S1921C, VAR PERS, which causes pin 12 of U1866D to be low. When the D output of the shift register goes low, the output of U1866D goes high and generates a clear pulse to the shift register.

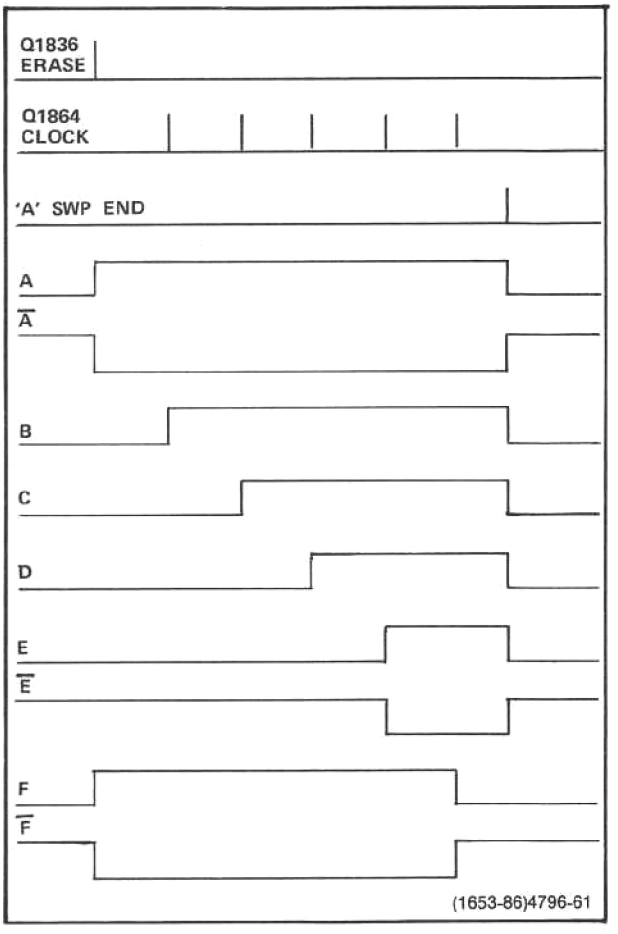

Fig. 3-9A. Shift Register and Storage Logic output.

The J output signal contains negative-going pulses generated by timing circuit U1844. The timing of these pulses is controlled by the VIEW TIME control and C1812. When VAR PERS is selected, U1876C is enabled and the output of U1844 is gated through to the J signal output.

Automatic Erase. In the FAST mode, the automatic erase feature may be used. The automatic erase cycle time is controlled by the VIEW TIME control. If the VIEW TIME control is in any position other than fully clockwise, the erase oscillator (Q1832 and Q1834) is enabled and will provide erase pulses to U1866A.

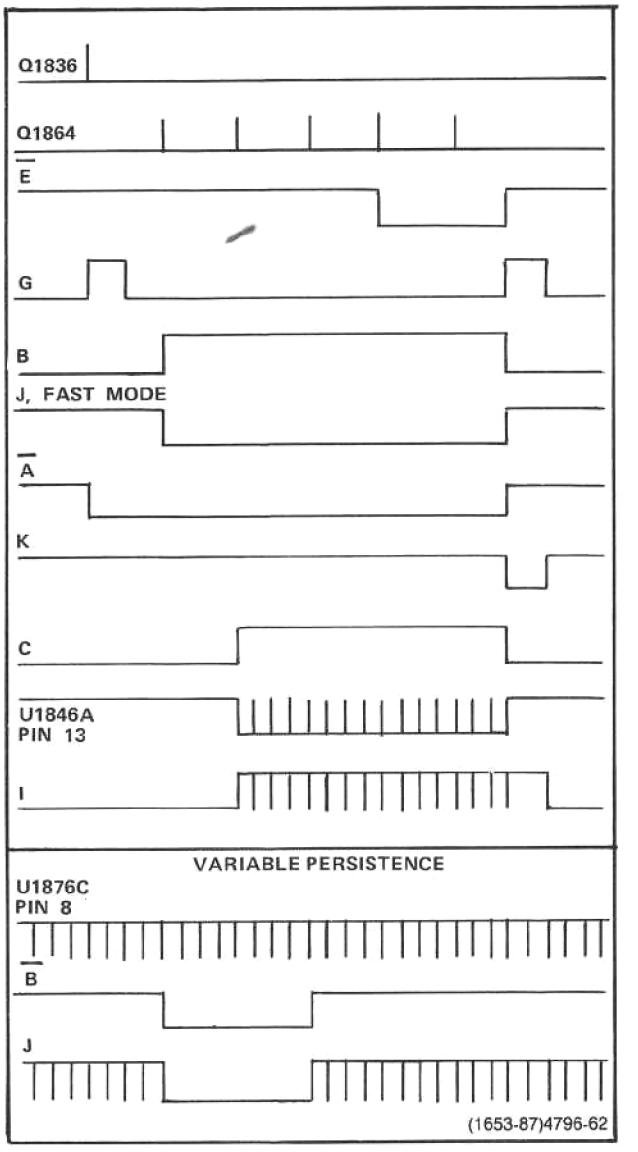

Fig. 3-9B. Shift Register and Storage Logic output signals in the Fast mode.

http://manoman.sqhill.com

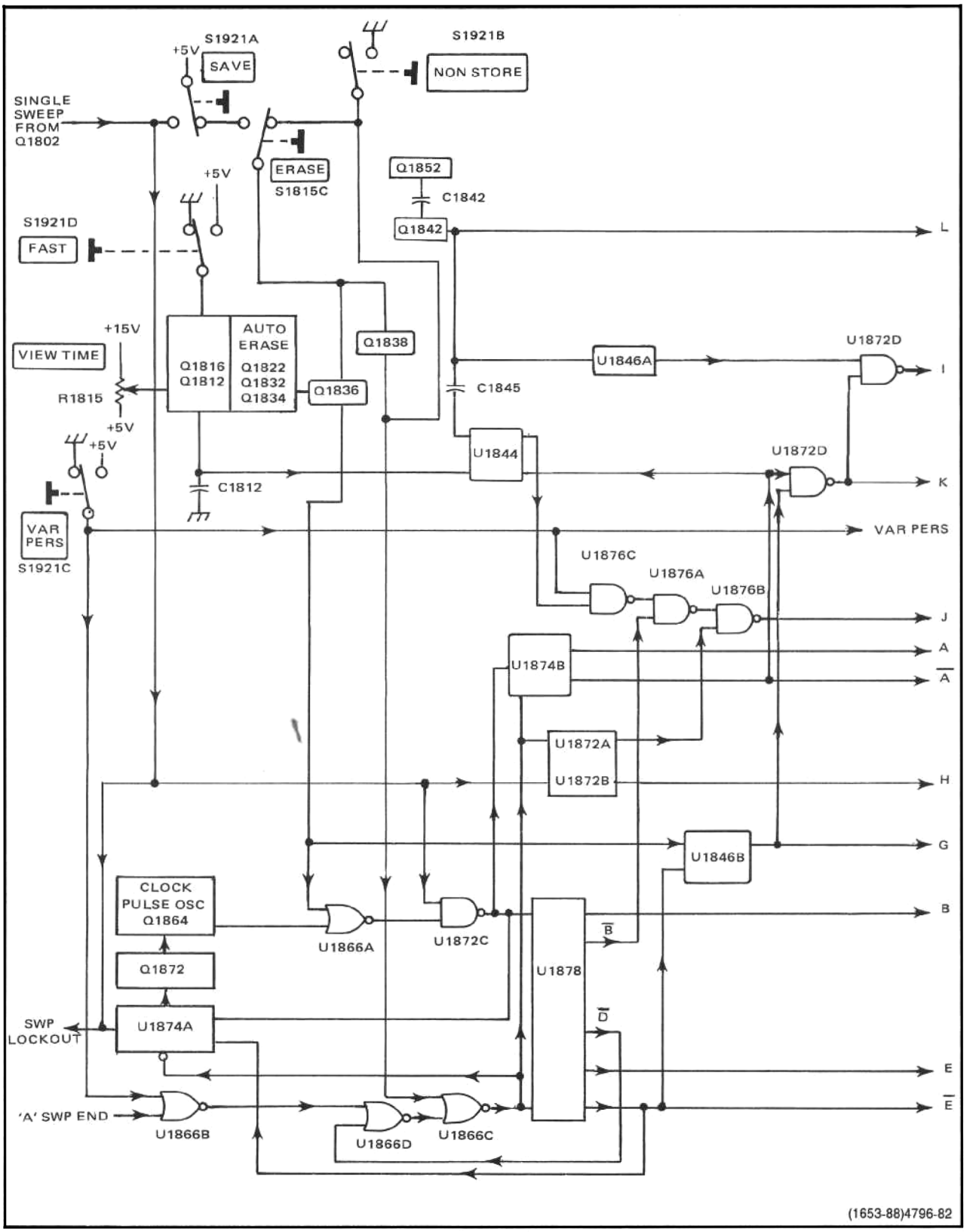

Fig. 3-10. Detailed block diagram of Erase and Timing circuit.

http://manoman.sqhill.com

Multiple Trace Storage. Multiple trace storage is accomplished by pressing the SINGL SWP pushbutton after a sweep is stored. When the SINGL SWP button is pressed, a pulse is coupled through Q1802 to flip-flop U1872A-U1872B and through U1872C to the shift register. The pulse to the flip-flop causes it to change states and disable the J signal output; the H signal output goes to the high state. The pulse is also gated through U1872C to start the shift register sequence.

Storage Amplifier Circuit

The storage output amplifier circuits (Fig. 3-11) provide selected voltage levels for the crt storage elements to maintain proper operation in all modes of operation (Non Store, Fast, Variable Persistence).

Flood Gun Anode and CE1 Amplifiers. The basic circuit is a two-transistor operational amplifier. The output voltage is controlled by the input current. The FGA and CE1 amplifiers operate the same, with the input currents and outputs being different. See Fig. 3-12 through 3-15 for waveforms and voltage levels produced. The A pulse turns off diodes CR2054 and CR2044. When these diodes are off, current from R2053 and R2043 is added to the amplifier input through diodes CR2055 and CR2045. When the B pulse occurs, CR2053 and CR2043 are turned on, which turns off CR2055 and CR2045, removing the current through R2053 and R2043 from the input. In the FAST mode, when more than one display is stored[1], diodes CR2052 and CR2042 are held on by the H input level. This maintains a 20 V level on the FGA element and a 30 V level on the CE1 element. When all logic inputs are LO, resistors R2054 and R2052 provide the input current which sets the output voltage of the FGA amplifier. Resistors R2044 and R2042 provide the input current which sets the output voltage of the CE1 amplifier.

CE2 and CE3 Circuits. The basic circuit is a two transistor operational amplifier. The output voltage is controlled by the input current. The A pulse turns off CR2032 and turns on CR2034, which adds the current through R2031 to the input. In the Variable Persistence mode, the +5 V to CR2033 turns it on and turns off CR2034, removing the current from R2031 to the input. When the K and the A pulses are HI, both diodes CR2035 and CR2032 are turned on, turning off diodes CR2034 and CR2036. This removes the current from R2032 and R2031 from the input of the amplifier. The Zener Diode VR2038 maintains a 20 V difference between the CE2 output and the CE3 output.

[1]**Accomplished by pressing the SINGL SWP pushbutton, while in the FAST mode.**

Collector Circuit. The basic circuit is a three-transistor operational amplifier. The output voltage is controlled by the input current. When all logic inputs are LO, the input current is provided by resistors R2022 and R2012. In the Variable Persistence mode, the +5 V connected to CR2013 by S1921C turns CR2013 on and turns CR2012 off, which removes the current through R2013 from the input. When the A and K pulses are both HI, CR2014 and CR2016 are turned on, turning CR2015 and CR2012 off, thus removing the current through R2015 and R2013 from the input.

Fast Mesh Circuit. The basic circuit is a four-transistor operational amplifier. The output voltage is controlled by the input current. When all logic inputs are LO, the input current is provided by R1984 and R1988. The A pulse turns off CR1986 and turns on CR1984, thus adding the current through R1985 to the input. In the Variable Persistence mode, switch S1921C connects the +5 V to CR1985, turning it on and turning CR1984 off, which reduces the current to the amplifier. In the Fast mode, I pulses turn on CR1982, which turns off diode CR1983, removing the current through the Fast Prep adjustment from the amplifier. When the K pulse is LO, CR1988 is turned off and CR1987 is turned on and the current through R1987 and R1989 is applied to the input circuit to provide a transfer level on the Fast Mesh.

Front Mesh Circuit. The basic circuit is a four-transistor operational amplifier (Q1938, Q1942, Q1944 and Q1948) and a fast high-voltage switch (Q1952, Q1956, Q1962/Q1964, and Q1966/Q1968). In the Non-Store mode, the amplifiers input current is through R1925, Diodes CR1938, CR1935, and CR1927 are turned off. When A goes LO, CR1932 is turned on and CR1933 is turned off, removing the input current through CR1933. When the J pulse goes LO, CR1924 turns on and CR1925 is turned off. This removes the current through the STORAGE LEVEL control from the input. Diode CR1926 is turned off by the J pulse, which connects the current through the Front Prep adjustment to the input. When the E pulse occurs, CR1928 and CR1936 turn on, removing the current from the Front Prep and the Front Op adjustments to the input circuit. When E goes LO, CR1937 is turned off, which allows the current through the Front Hold adjustment to be added to the input circuit. The G pulse output is connected directly to Q1952, the input of the high-voltage switch. When the G pulse goes HI, Q1952 conducts, turning Q1956 on, which turns off Q1962 and Q1964 and turns on Q1966 and Q1968, applying a 600 V pulse to the Front Mesh. Diode CR1941 is turned off, disconnecting the operational amplifier from having any control over the Front Mesh.

http://manoman.sqhill.com

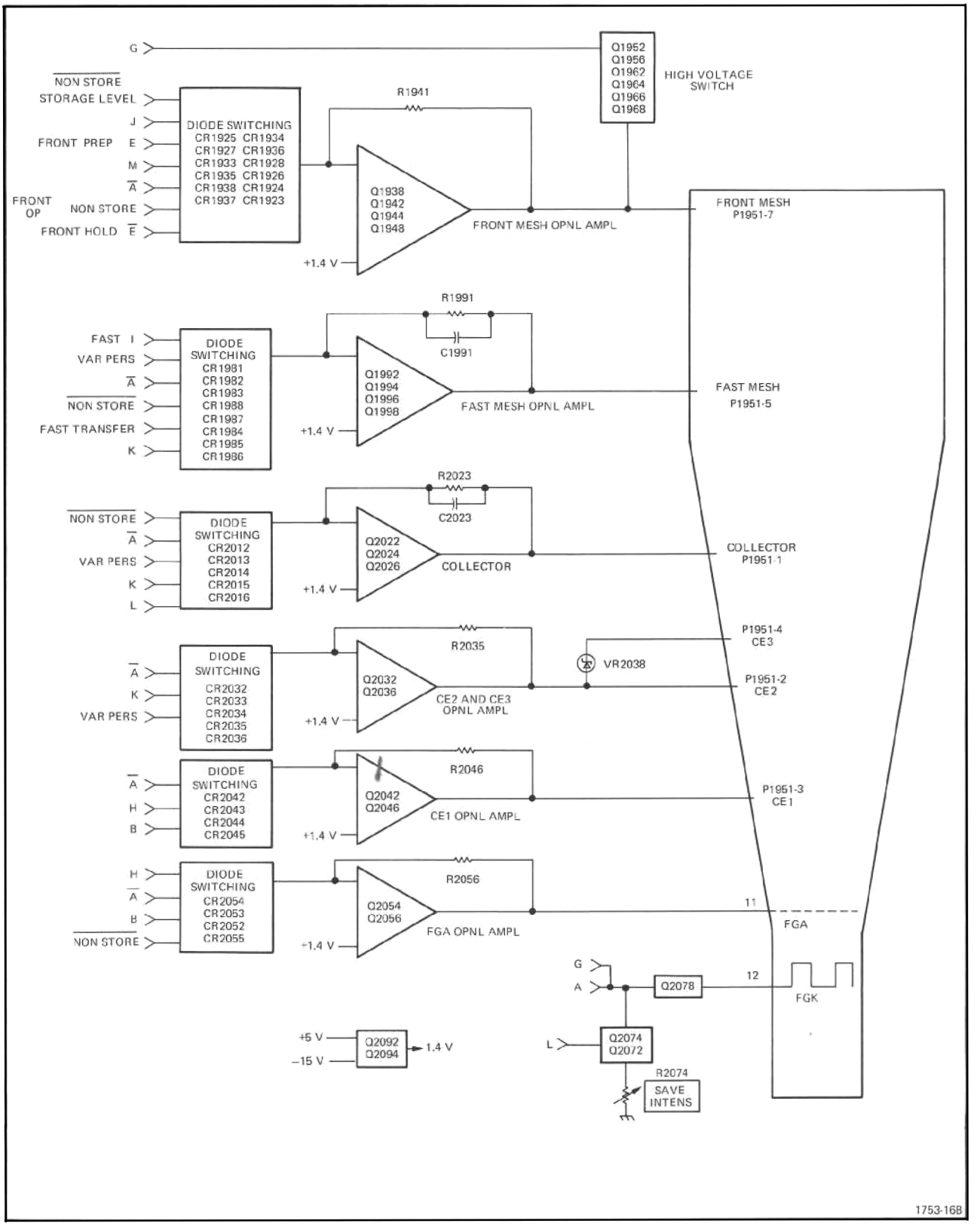

Fig. 3-11. Block diagram of Storage Output circuits.

http://manoman.sqhill.com

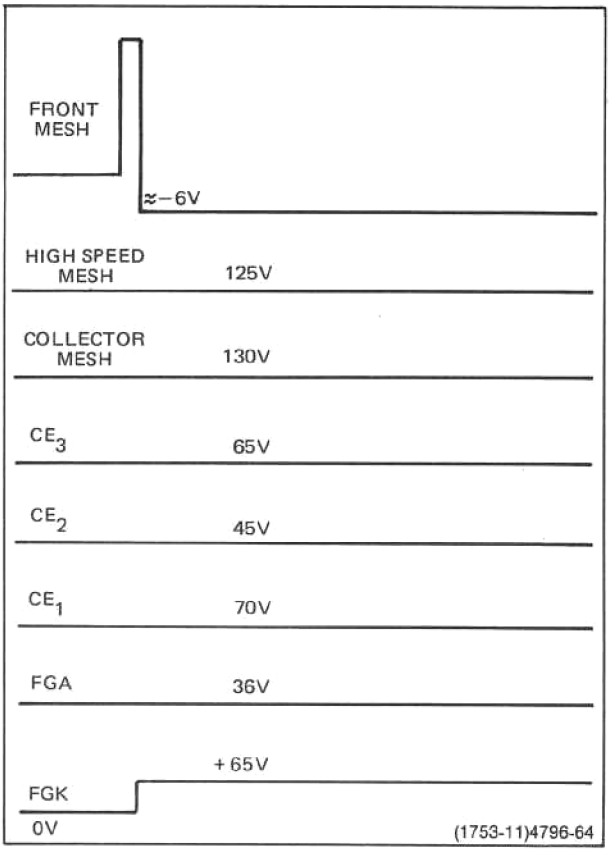

Fig. 3-12. Non-Store mode—CRT storage element voltage levels.

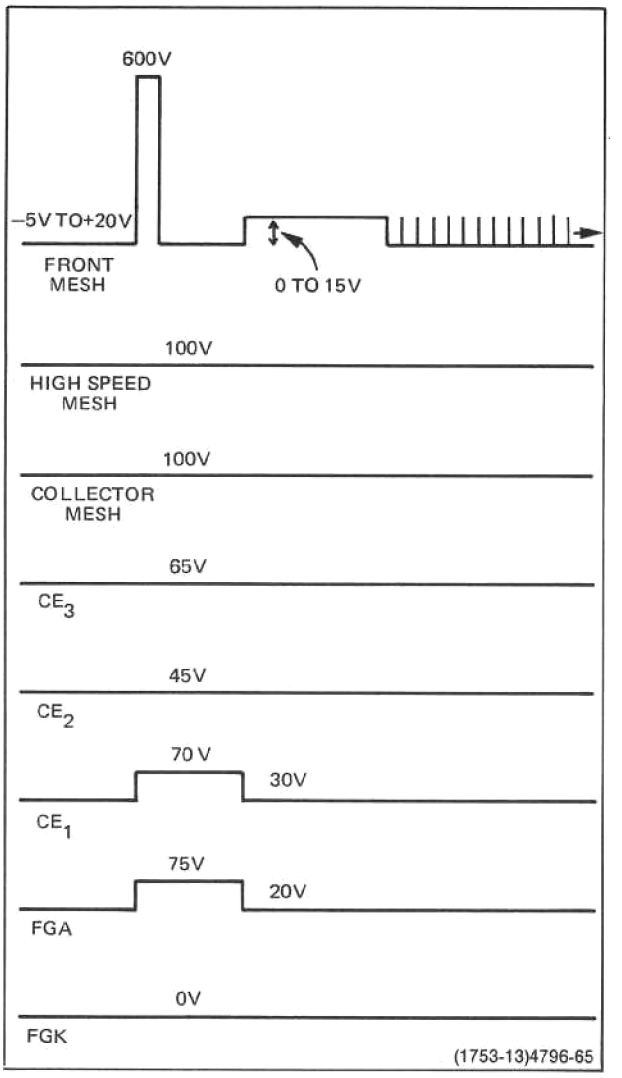

Fig. 3-13. Variable Persistence mode—CRT storage element voltage levels.

http://manoman.sqhill.com

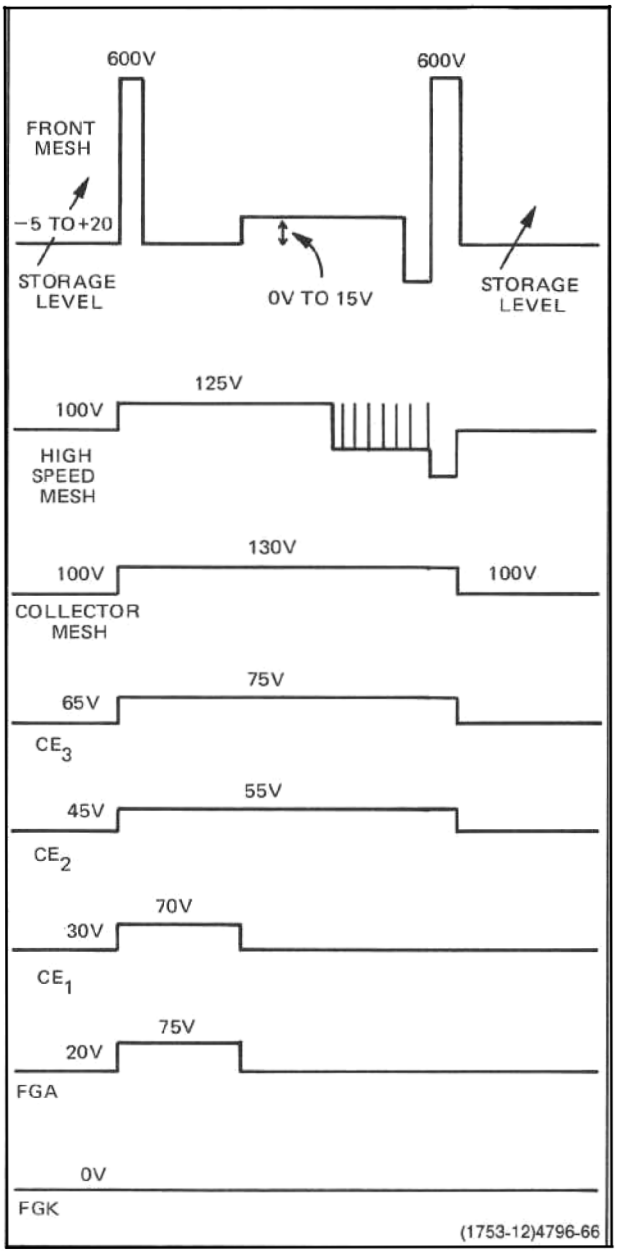

Fig. 3-14. Fast mode—CRT storage element voltage levels.

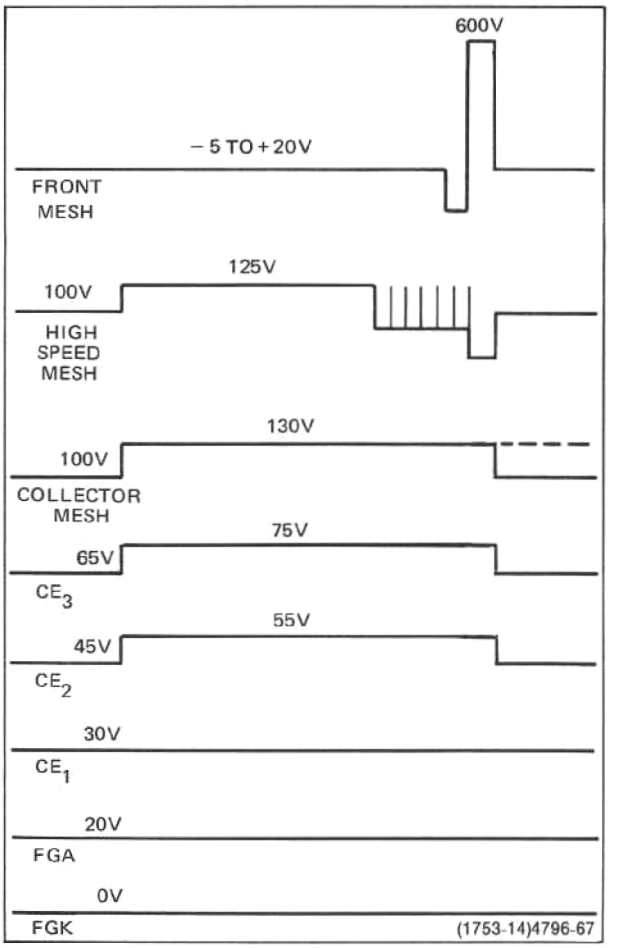

Fig. 3-15. Multi-Fast mode—CRT storage element voltage levels.

http://manoman.sqhill.com

MAINTENANCE

INTRODUCTION

This section of the manual contains information for use in preventive or corrective maintenance and troubleshooting of the 466.

CABINET REMOVAL

WARNING

High voltages exist at several points throughout this instrument. Disconnect power before cleaning the instrument or replacing parts. When the instrument is operated with the cover removed, do not touch exposed connections or components. Some transistors may have elevated cases.

The instrument wrap-around cabinet can be removed in the following manner:

1. Disconnect the instrument power cord from the power source.

2. Install the front-panel cover and set instrument face down on a flat surface.

3. Unwrap the power cord from the instrument feet.

4. Completely loosen the six screws indicated in Fig. 4-1 and remove the rear cabinet frame (with feet and screws) from the instrument as an intact assembly.

CAUTION

When reinstalling the cabinet over the chassis, avoid pinching cables or damaging components that protrude from the circuit board.

5. Slide the wrap-around cabinet up and over the back to remove the oscilloscope. To replace the instrument in its wrap-around cabinet, reverse the removal procedure.

PREVENTIVE MAINTENANCE

General

Preventive maintenance consists primarily of cleaning and visual inspection. When performed on a regular basis, preventive maintenance can prevent instrument breakdown and will improve the reliability of this instrument. The severity of the environment to which the instrument is subjected will determine the frequency of maintenance. A convenient time to perform preventive maintenance is just prior to recalibration of the instrument.

Cleaning

General. The instrument should be cleaned as often as operating conditions require. Accumulation of dirt in the instrument can cause overheating and component breakdown. Dirt on components acts as an insulating blanket and prevents efficient heat dissipation. It also provides an electrical conduction path which can result in instrument failure.

The cabinet provides protection against dust in the interior of the instrument. Operation without the cabinet in place necessitates more frequent cleaning. The front cover provides a measure of dust protection for the front panel and the crt face. The front cover should be installed when storing or transporting the instrument.

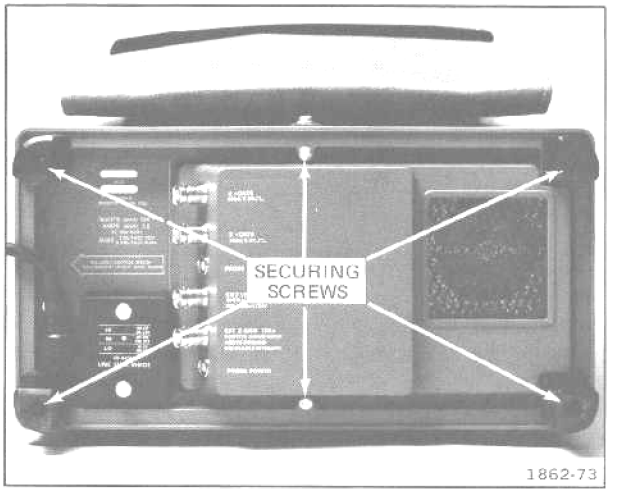

Fig. 4-1. Typical rear cabinet frame removal.

http://manoman.sqhill.com

CAUTION

Avoid the use of chemical cleaning agents which might damage the plastics used in this instrument. Do not use chemicals which contain acetone, benzene, toluene, xylene, petroleum ether, white kerosene, carbon tetrachloride, methylene chloride, trichloroethane, trichlorotrifluoroethane (Freon-113, -tf, -ta, -te, -tmc) and trichlorethylene. Recommended cleaning agents are isopropyl alcohol, kelite (1 part kelite, 20 parts water) or a solution of 1% mild detergent and 99% water. In the absence of these cleaners, it is safe to use ethyl alcohol (methanol).

Switch Contacts. Most of the switching in the 466 is accomplished with circuit-board mounted, cam-actuated contacts. Care must be exercised to preserve the high-frequency characteristics of these switches. Seldom is switch maintenance necessary, but if it is required, observe the following.

Clean the switch contacts only with isopropyl alcohol, especially in the area of the vertical attenuator boards. Carbon-based solvents will damage the polyphenylene oxide boards used for the attenuators. Apply the isopropyl alcohol with a camel-hair brush. Do not use cotton swabs. They tend to snag on contacts, causing possible damage or intermittent electrical contact.

Most spray circuit coolants contain Freon 12 as a propellant. Because many Freons adversely affect switch contacts, check the contents and brand name before using a spray coolant. The following brand names are acceptable coolants: Artic Freeze, Quik-Freeze, and Can-O-Gas. Do not use Zero Mist brand of circuit coolant. The only recommended circuit coolants for the volts/division attenuators are dry ice (CO_2) or isopropyl alcohol.

Exterior. Loose dust accumulated on the outside of the 466 can be removed with a soft cloth or small paint brush. The paint brush is particularly useful for dislodging dirt on and around the front-panel controls. Dirt which remains can be removed with a soft cloth dampened in a mild detergent and water solution. Abrasive cleaners should not be used.

CRT. Clean the blue and clear plastic light filters and the crt face with a soft, lint-free cloth dampened with denatured alcohol or a mild detergent and water solution. The optional crt mesh filter can be cleaned in the following manner.

1. Hold the filter in a vertical position and brush lightly with a soft brush to remove light coatings of dust and dirt.

2. Greasy residues or dried-on dirt can be removed with a solution of warm water and neutral pH liquid detergent. Use the brush to lightly scrub the filter.

3. Rinse the filter thoroughly in clean water and allow to air dry.

4. If any lint or dirt remains, use clean low-pressure (9 psi is adequate) air to remove. Do not use tweezers or other hard cleaning tools on the filter; the special finish may be damaged.

5. When not in use, store the mesh filter in a lint-free dust-proof container such as a plastic bag.

Interior. Dust in the interior of the instrument should be removed occasionally due to its electrical conductivity under high-humidity conditions. The best way to clean the interior is to blow off the accumulated dust with dry, low-pressure air. Remove any dirt that remains with a soft paint brush or a cloth dampened with a mild detergent and water solution. A cotton-tipped applicator is useful for cleaning in narrow spaces or for cleaning circuit boards.

Visual Inspection

The instrument should be inspected occasionally for such defects as broken connections, broken or damaged ceramic strips, improperly seated semiconductors, damaged or improperly installed circuit boards, and heat-damaged parts.

The corrective procedure for most visible defects is obvious; however, particular care must be taken if heat-damaged components are found. Overheating usually indicates other trouble in the instrument; therefore, it is important that the cause of overheating be corrected to prevent recurrence of the damage.

Lubrication

The fan motor and most of the potentiometers used in the 466 are permanently sealed and generally do not require periodic lubrication. The switches, both cam- and lever-type, are installed with proper lubrication applied where necessary and will only rarely require any additional lubrication. It is recommended that a regular periodic lubrication program not be performed on any of the components used in the 466.

http://manoman.sghill.com

Semiconductor Checks

Periodic checks of the transistors and other semiconductors are not recommended. The best check of semiconductor performance is actual operation in the instrument.

Recalibration

To ensure accurate measurements, check instrument calibration after each 1000 hours of operation or every six months if used infrequently. In addition, replacement of components may necessitate recalibration of the affected circuits. Complete calibration instructions are given in the Calibration section.

The calibration procedure can also be helpful in localizing certain troubles in the instrument. In some cases, minor troubles may be revealed or corrected by recalibration.

CORRECTIVE MAINTENANCE

General

Corrective maintenance consists of component replacement and instrument repair. Special techniques required to replace components in this instrument are given here.

Obtaining Replacement Parts

Standard Parts. All electrical and mechanical part replacements for the 466 can be obtained through your local Tektronix Field Office or representative. However, many of the standard electronic components can be obtained locally in less time than is required to order them from Tektronix, Inc. Before purchasing or ordering replacement parts, check the parts list for value, tolerance, rating, and description.

NOTE

Physical size and shape of a component may affect instrument performance, particularly at high frequencies. Always use direct-replacement components, unless it is known that a substitute will not degrade instrument performance.

Special Parts. In addition to the standard electronic components, some special components are used in the 466. These components are manufactured or selected by Tektronix, Inc. to meet specific performance requirements, or are manufactured for Tektronix, Inc., in accordance with our specifications. Most of the mechanical parts used in this instrument have been manufactured by Tektronix, Inc. Order all special parts directly from your local Tektronix Field Office or representative.

Ordering Parts. When ordering replacement parts from Tektronix, Inc., it is imperative that all of the following information be included in the order to ensure receiving the proper parts.

1. Instrument type (include mod or option numbers).

2. Instrument serial number.

3. A description of the part (if electrical, include the circuit number).

4. Tektronix part number.

Recalibration After Repair

After any electrical component has been replaced, the calibration of that particular circuit should be checked, as well as the calibration of other closely related circuits. Since the power supply affects all circuits, calibration of the entire instrument should be checked if work has been done in the power supply or if the transformer has been replaced.

Instrument Repackaging

If the Tektronix instrument is to be shipped to a Tektronix Service Center for service or repair, attach a tag showing: owner (with address) and the name of an individual at your firm that can be contacted, complete instrument serial number and a description of the service required.

Save and re-use the package in which your instrument was shipped. If the original packaging is unfit for use or not available, repackage the instrument as follows:

1. Obtain a carton of corrugated cardboard having inside dimensions of no less than six inches more than the instrument dimensions; this will allow for cushioning. Refer to the following table for carton test strength requirements.

2. Surround the instrument with polyethylene sheeting to protect the finish of the instrument.

3. Cushion the instrument on all sides by tightly packing dunnage or urethane foam between carton and instrument, allowing three inches on all sides.

4. Seal carton with shipping tape or industrial stapler.

http://manoman.sghill.com

SHIPPING CARTON TEST STRENGTH

Gross Weight (lb)	Carton Test Strength (lb)
0-10	200
10-30	275
30-120	375
120-140	500
140-160	600

Soldering Techniques

WARNING

Always disconnect the instrument from the power source before soldering.

Ordinary 60/40 solder and a 35- to 40-watt pencil-type soldering iron can be used to accomplish the majority of the soldering. If a higher wattage-rating soldering iron is used on the etched circuit boards, excessive heat can cause the etched circuit wiring to separate from the board base material.

CAUTION

The Vertical Preamplifier Attenuator circuit boards are made of material easily damaged by excessive heat. When soldering to these boards, do not use a soldering iron with a rating of more than approximately 15 watts. Avoid prolonged application of heat to circuit-board connections. Use only isopropyl alcohol when cleaning this circuit board.

When soldering to the ceramic strips in the instrument, a slightly larger soldering iron can be used. It is recommended that a solder containing about 3% silver be used when soldering to these strips to avoid destroying the bond to the ceramic material. This bond can be broken by repeated use of ordinary tin-lead solder or by the application of too much heat; however, occasional use of ordinary solder will not break the bond if excessive heat is not applied.

If it becomes necessary to solder in the general area of any of the high-frequency contacts in the instrument, clean the contacts immediately after soldering. Refer to the section entitled Switch Contacts under Preventive Maintenance for recommended cleaners and procedures.

Component Replacement

WARNING

Always disconnect the instrument from the power source before replacing components.

Semiconductor Replacement. Semiconductors should not be replaced unless actually defective. If removed from their sockets during routine maintenance, return them to their original sockets. Unnecessary replacement of semiconductors may affect the calibration of this instrument. When semiconductors are replaced, check the operation of the part of the instrument which may be affected.

Replacement semiconductors should be of the original type or a direct replacement. Lead configuration of the semiconductors used in this instrument are shown in the pullout pages. Some plastic case transistors have lead configurations which do not agree with those shown there. If a replacement transistor is made by a different manufacturer than the original, check the manufacturer's basing diagram for correct basing. All transistor sockets in this instrument are wired for the standard basing as used for metal-cased transistors. Transistors which have heat radiators or are mounted on the chassis use silicone grease to increase heat transfer. Replace the silicone grease when replacing these transistors.

WARNING

Handle silicone grease with care. Avoid getting silicone grease in the eyes. Wash hands thoroughly after use.

An extracting tool should be used to remove the 14, 16, and 20 pin integrated circuits to prevent damage to the pins. This tool is available from Tektronix, Inc. Order Tektronix part No. 003-0619-00. If an extracting tool is not available when removing one of these integrated circuits, pull slowly and evenly on both ends of the device. Try to avoid having one end of the integrated circuit disengage from the socket before the other, since this may damage the pins.

Circuit Board Replacement

Occasionally it may be necessary to gain access to the reverse side of the circuit board or to remove one circuit board to gain access to another. The following procedures outline the necessary steps to facilitate instrument disassembly. Most of the connections to the circuit boards in

http://manoman.sqhill.com

the instrument are made with pin connectors. However, some connections are soldered to the board. Observe the soldering precautions given under Soldering Techniques in this section.

Vertical Preamp Board. Remove and replace as folows:

1. Disconnect and remove the following control extension shafts (held to switch or potentiometer shafts with .050" Allen set screws):

   a. Two vertical POSITION shafts.

   b. Two VAR VOLTS/DIV shafts.

   c. TRIG VIEW pushbutton shaft.

2. Disconnect the INVERT pushbutton extension shaft from the INVERT switch shaft. Insert a scribe or similar tool between the end of the white plastic switch shaft and get inside of the black plastic extension shaft and pry gently.

3. Remove the CH 1 and CH 2 attenuator shields (each is held with five screws and washers).

4. Unsolder the two resistors that connect the Vertical Preamp board to the Attenuator boards.

5. Unplug P3505 from the Vertical Mode Switching board.

6. Unplug nine coaxial cable connections from the board. Note cable color code and location to facilitate reinstallation.

7. Unplug the delay-line leads from the rear of the board.

8. Unsolder the bare wire ground connection between the Preamp board and the Interface board, near the Geometry control.

9. Remove the five screws holding the board and remove the board from the instrument.

10. To replace the Vertical Preamp board, reverse the removal steps.

Vertical Mode Switch and Attenuator. Remove and replace as follows:

1. Remove the Vertical Preamp board according to the preceding procedure.

2. Remove the two VOLTS/DIV knobs.

3. Remove AC-GND-DC lever switch knobs (pull straight off).

4. Unplug all connectors from the Vertical Mode Switch board. Note wire color codes to facilitate correct reinstallation.

5. Remove the securing screw and hex securing post from the rear of the Vertical Mode Switch board.

6. Remove the four nuts that secure the attenuator assemblies to the front casting.

7. Remove the Vertical Mode Switch board from the instrument.

8. To reinstall the Vertical Mode Switch board, reverse the order of removal steps. To align the VERT MODE switch pushbuttons, hold the assembly in place with a slight forward pressure and use a small tool to reach through the front panel to align the buttons. Install the remaining parts in the reverse order of removal. Do not tighten the circuit board securing screws until the securing nuts at the front of the attenuator chassis are tight and the circuit board is aligned properly.

Trigger Generator and Sweep Logic Board. Remove and replace as follows:

1. Disconnect eight coaxial cables (five on the front and three on the back). Note cable color codes and locations to ensure proper installation during reassembly.

2. Unplug all connectors from Trigger board. Note wire color codes and locations to ensure proper installation during reassembly.

3. Remove the A TRIGGER and B TRIGGER SLOPE/LEVEL knobs and the A TRIG HOLDOFF knob.

4. Remove the nuts and washers from the SLOPE/LEVEL potentiometers.

http://manoman.sghill.com

5. Remove the POWER switch actuator rod from the plastic holder on the switch. Pry the rod out of the holder with a small flat-bladed screwdriver.

6. If the circuit board is being completely replaced, remove the POWER switch bracket from the circuit board. It is held with two nuts and two flat washers.

7. Remove three mounting screws from the circuit board (two at rear, and one at center-top; pozidrive screwdriver required).

8. Unplug the Trigger Generator and Sweep Logic circuit board from the Interface board by forcing the Trigger board away from the two white interboard connectors at the bottom edge of the Trigger board. Use screwdriver to pry loose.

9. Move the Trigger board to the rear until the Trigger switches clear the front casting and then remove the assembly from the instrument. Exercise caution to avoid damaging the connector pins on the Interface board.

10. To reinstall the Trigger Generator and Sweep Logic circuit board, reverse the order of the removal steps. If the indexing of the Trigger switches was disturbed, a series of trial-and-error installation-removal-adjustment steps will be necessary to return them to correct alignment.

Sweep Timing Circuit Board. Remove and replace as follows:

1. Remove the Trigger Generator and Sweep Logic circuit boards as outlined above to facilitate the Timing board removal.

2. Unsolder four wires from the Timing circuit board. Make note of wire color-codes to ensure proper installation during reassembly.

3. Remove the knobs from the VAR TIME/DIV control and the A AND B TIME/DIV switches (1/16" Allen wrench required). Be careful not to lose the plastic bushing behind the knobs.

4. Remove the two (2) board mounting screws and the hex rod from the Sweep Timing circuit board (3/16" wrench or nutdriver required).

5. Use a flat blade screwdriver and pry the Timing board away from the Interface board. Gently pull away the corner of the Interface board near the B External Triger Input connector and simultaneously lift up on the Timing board near the rear to fully disengage connector pins from the Interface board.

6. To reinstall the Timing board, reverse the order of the removal steps.

Storage Board. Remove and replace as follows:

1. Remove the INVERT, BEAM FINDER, and X10 MAG (IN) extension shafts. Remove by prying with a scribe or similar tool between the end of the white plastic switch shaft and the inside end of the extension shaft.

2. Remove the INTEN, ASTIG, FOCUS, TRACE ROTATION, and SCALE ILLUM extension shafts. (Use .050" Allen wrench to remove shafts from shaft coupling.)

3. Remove the STORAGE LEVEL/INTEN, VIEW TIME/ERASE and POSITION/FINE knobs. Use .050" and 1/16" Allen wrenches. The ERASE knob is removed by pulling straight off.

4. Remove the SAVE, NON STORE, VAR PERS and FAST pushbuttons by pulling them straight off.

5. Unplug P1951 from the Storage board.

6. Unsolder the white-gray wire from the +600 V point on the Storage board.

7. Remove the four board mounting screws.

8. Carefully move the board straight forward to disconnect the interconnecting pins from the Main Interface board.

9. To install the Storage board, reverse the order of the removal steps.

Low-Voltage Power Transformer Replacement

1. Remove the fuse block cover from the rear of the instrument.

http://manoman.sghill.com

2. Remove the calibrator loop. Unsolder the white-red and white-brown wires. Remove the nuts, flat washers and insulating washers.

3. Remove the ground post.

4. Remove the blue cover plate from the rear of the instrument.

5. Remove the screw holding the top outside transformer mounting bar.

6. Remove the transformer mounting bolts to free the transformer.

7. Unsolder the transformer leads from the Interface board and the solder lug on the rear subpanel. Note the wire color-codes to facilitate correct reinstallation.

8. Remove the transformer leads from the fuse block. It will be necessary to use a special pin removing tool available under Tektronix Part No. 003-0707-00. It is necessary to use this tool to remove the transformer leads from the fuse block. The leads can be reinstalled by simply pushing them into place. Note wire color codes and locations to facilitate correct reinstallation.

9. Option 07 only—Unsolder the five wires from transformer terminals. Note wire color codes and locations to facilitate reinstallation.

10. Remove the POWER switch mounting bracket from the Trigger board.

11. Remove the thermal cutout switch mounted on the main chassis. It is held with two self-tapping screws.

12. Remove the transformer assembly from the instrument.

13. Remove the thermal cutout and POWER switch assembly from the old transformer and install on the new transformer. Note wire color codes and locations to facilitate correct installation.

14. Install the new transformer assembly in the instrument by reversing the order of the removal steps.

HV Multiplier and HV Transformer Replacement

1. Remove the high-voltage shield on the right side behind the Vertical Preamp board (held with two screws on the outside of the shield and one screw under the rear of the Vertical Preamp board).

2. Remove the plastic cover from the HV Multiplier.

3. Discharge the crt anode lead to the chassis and unsolder it from the HV Multiplier board.

4. Unsolder the HV Transformer center lead and remove the HV Multiplier board.

5. To remove the HV Transformer:

   a. Remove the top HV shield (held with four screws).

   b. Unsolder the two high-voltage diodes from the HV Transformer lead that projects through the Interface board.

   c. Unsolder the remaining HV Transformer leads from the Interface board, while removing HV Transformer. (Use a solder-removing tool.) Note wire locations to facilitate reinstallation.

6. To install the HV Multiplier or HV Transformer, reverse the order of the removal steps.

CRT Replacement

WARNING

Handle the crt carefully. Rough handling or scratching can cause the crt to implode.

Removal.

1. Remove the gray plastic bezel and filter from the front of the crt (held with four screws).

2. Remove the plastic rear cover from the rear of the instrument (held with two flat-head screws). Do not unsolder wires.

http://manoman.sqhill.com

3. Remove the bell-shaped cover to expose the crt socket (held with two screws). It will be necessary to remove one screw, loosen one screw and swivel the plate under the fan impeller to gain access to one of the cover mounting screws.

4. Unplug the crt socket.

5. Set the instrument on its left side.

6. Unplug the vertical deflection plate leads from the left side of the crt neck.

7. Unplug the horizontal deflection plate leads from the bottom side of the crt neck.

8. Unplug the storage plug (P1951) from the Storage board.

9. Disconnect the crt anode connector and discharge the connector pin to the instrument chassis.

10. Holding one hand on the crt face, push forward (slowly) on the crt base with the other hand. Guide the anode connector and the storage plug through crt shield openings while slowly pulling the crt out of the instrument. The plastic corner pads may fall loose when the crt is removed; save them for reinstallation. Also, the white plastic centering bracket should remain inside the crt shield.

Set the crt on a soft material to prevent scratching.

Installation.

1. Make sure the plastic centering bracket is in place inside the shield and that the black plastic corner pads are in place at the front corners of the crt opening.

2. Insert a wire or string through the hole in the upper right rear corner of the crt shield, to facilitate installation of the anode lead. Be sure to dress the wire or string across the upper right opening of the platic centering bracket.

3. Connect the wire or string to crt anode lead connector and add tape to hold it firmly.

4. Insert the neck of the crt part way into the crt shield and into the plastic centering bracket. Orient the crt with the anode lead towards the top of the instrument.

5. While holding the front of the crt with one hand, carefully insert the storage plug through the grommet hole in the bottom of the crt shield. Be sure to pull wires through while inserting crt.

6. Draw the anode lead through the hole in the shield.

7. While still holding the crt with one hand, make sure the plastic centering bracket is in place on the crt neck.

8. Slowly push the crt the rest of the way into the crt shield. If the crt does not go in all the way, pull it out part way and move the plastic centering bracket farther up on the crt neck.

9. Install the bezel filter on the front of the crt.

10. Make the following crt connections:

a. Crt anode lead

b. Crt base socket

c. Storage plug (P1951). Be sure to match arrows.

d. Horizontal deflection plate leads to neck pins. (White-green wire to right pin and white-red wire to left pin.)

e. Vertical deflection plate leads to neck pins. (White-blue to upper pin and white-brown to lower pin.)

11. Install bell-shaped crt socket cover (two screws).

12. Secure plate under fan impeller.

13. Install plastic rear cover (two flat-head screws—see crt replacement, Step 3).

14. Check the calibration of the instrument.

http://manoman.sqhill.com

CALIBRATION

INTRODUCTION

Purpose

The purpose of the calibration procedure is to provide a calibration sequence for adjustments, run a functional check of all modes prior to calibration and correct all defects found.

Where possible, instrument performance is checked before an adjustment is made. Steps containing adjustments and checks are titled Check/Adjust steps. Those with only checks are titled Check steps. A total check of all characteristics is possible by going through the calibration procedure and performing each step only through the CHECK portion.

Limits and Tolerances

All limits and tolerances given in this procedure are calibration guides and should not be interpreted as instrument specifications unless they are also found in the Specification section of this manual.

Tolerances given are for the oscilloscope under test and do not include test equipment error.

Line Voltage Selection

This procedure is for 115 V ac line, medium range. If a different range is to be used, set the Regulating Range Selector and Line Voltage Selector for the available line voltage.

Internal Adjustments

Do not preset internal controls or move the +65 V Supply adjustment as this typically will require complete recalibration.

Display

Ajustments should be made with a stable, well-focused, low-intensity display. Unless otherwise noted, adjust the Intensity, Astigmatism, Focus, Position and Trigger Level controls as needed.

Externally Accessible Adjustments

The following internal calibration adjustments can be made without cabinet removal (review the appropriate portion of the calibration procedure before making adjustments):

Adjustment	Location	Calibration
CH 1 Var Bal (R3484)	Left-hand side panel	Vertical
CH 1 Gain (R3482)	Left-hand side panel	Vertical
CH 2 Var Bal (R3884)	Left-hand side panel	Vertical
CH 2 Gain (R3882)	Left-hand side panel	Vertical
Fine Fast Transfer Level (R1987)	Bottom panel	Storage

http://manoman.sqhill.com

TEST EQUIPMENT REQUIRED

The test equipment listed in Table 5-1, or equivalent, is required for complete calibration of the 466. Specifications given for the equipment are the minimum necessary for accurate calibration. Therefore, the equipment used must meet or exceed the listed specifications. Detailed operating instructions for the test equipment are not given in this procedure. Refer to the appropriate instruction manual if more information is needed.

If only a Performance Check is to be performed, not all of the listed test equipment is required. Items used only for calibration are indicated by footnote a. The remaining pieces of equipment are common to both procedures.

Special Calibration Fixtures

Special calibration fixtures are used only where they facilitate instrument calibration. These fixtures are available from Tektronix, Inc. Order by part number through your local Tektronix Field Office or representative.

Calibration Equipment Alternatives

All of the listed equipment is required to completely check and calibrate this instrument. However, complete checking or calibration may not always be necessary or desirable. The user may be satisfied with checking only selected characteristics, thereby reducing the amount of test equipment actually required.

The Performance Check and Calibration procedures are based on the first item of equipment given as an example. When other equipment is substituted, control settings, calibration setup, or choice of accessories might need to be altered. If the exact item of equipment given as an example in the Test Equipment list is not available, first check the Minimum Specifications column carefully to see if any other equipment might suffice. Then check the Usage column to see what this item is used for. If used for a check or adjustment that is of little or no importance to your measurement requirements, the item and corresponding step(s) can be deleted.

In this procedure, test equipment is named by the functional description (see Table 5-1, Description), rather than by specific front-panel nomenclature.

The following procedures are written to completely check and adjust the 466 to the Performance Requirements listed in the Specifications section and in the Operators manual. If the applications for which you will use the 466 do not require the full available performance from the 466, the procedures and the required equipment list can be shortened accordingly. For example, the basic measurement capabilities of this instrument can be verified by just checking vertical deflection accuracy and basic horizontal timing and calibrator signal.

Table 5-1
TEST EQUIPMENT REQUIRED

Description	Minimum Specifications	Usage	Examples
1. Variable Autotransformer[a]	Output, 1.2 A over a range of 103.5 to 126.5 V.	Power supply regulation check.	General Radio W8MT3VM Variac Autotransformer
2. Digital Multimeter[a]	Range, 0 to 150 V; dc voltage accuracy, within 0.1%; display, 4 1/2 digits.	Low-voltage power supply checks and adjustment; crt grid bias check; calibrator output voltage adjustment.	a. TEKTRONIX DM 501A Digital Multimeter[b] b. Any digital voltmeter that meets minimum specifications.
3. DC Voltmeter[a]	Range, 0 to 1500 V; calibrated to 1% accuracy at −1470 V.	High-voltage power supply check.	a. Triplett Model 630-NA. b. Simpson Model 262.

[a]**Used for calibration procedure only.**

[b]**Requires a TM 500 series power module.**

http://manoman.sqhill.com

Table 5-1 (cont)

Description	Minimum Specifications	Usage	Examples
4. Test Oscilloscope with 2 10X probes and a 1X probe	Bandwidth, dc to 100 MHz; minimum deflection factor, 5 mV/division; accuracy within 3%; dual trace. (One 10X probe should have Scale-Factor switching, but an 11 kΩ resistor may be substituted in subsection C VERTICAL, Step 1, part a.)	Power Supply ripple; crt Z-axis compensation; Vertical gain adjustment; A Trigger Holdoff check; Storage checks and adjustments; A and B + GATE output signals check.	a. TEKTRONIX 465B Oscilloscope with 2 included (10X) probes. b. TEKTRONIX 475 Oscilloscope with 2 included (10X) probes. c. 2 P6062B (10X or 1X) probes are supplied as standard accessories for the 466.
5. Amplitude Calibrator	Amplitude accuracy, within 0.25%; signal amplitude, 2 mV to 50 V; output signal, 1 kHz square wave.	Vertical checks and adjustments; Trigger View gain check; Storage checks and adjustments; X Gain adjustment; External Z-axis check.	TEKTRONIX PG 506 Calibration Generator.[b]
6. Leveled Sine-Wave Generator	Frequency, 350 kHz to above 100 MHz; output amplitude, variable from 0.5 to 5 V peak-to-peak; output impedance, 50 Ω; reference frequency, 50 to 350 kHz; amplitude accuracy, constant within 3% of reference frequency as output frequency changes.	Vertical centering, bandwidth and isolation checks; Trigger checks and adjustments; Storage check and adjustments; X-Y phase difference adjustment; X-Y bandwidth check.	TEKTRONIX SG 503 Leveled Sine-Wave Generator.[b]
7. Time-Mark Generator	Marker outputs, 10 ns to 0.5 s; marker accuracy, within 0.1% trigger output, 1 ms to 0.1 μs, time coincident with markers.	Crt Y-axis and geometry adjustments; Auto trigger check; Horizontal timing checks and adjustments. Storage checks and adjustments.	TEKTRONIX TG 501 Time Mark Generator.[b]
8. Low-Frequency Sine-Wave Generator	Frequency, 10 Hz to 50 kHz; output amplitude, variable from 10 mV to 4 V peak-to-peak.	Low-frequency trigger checks.	TEKTRONIX SG 502 Oscillator.[b]
9. Square-Wave Generator	Repetition rate, 1 kHz to 1 MHz; risetime, 1 ns or less from fast-rise ± outputs; output amplitude, at least 60 V pulse from High-amplitude output; aberrations, within 2% from fast-rise output.	Vertical compensation; Trigger view compensation.	TEKTRONIX PG 506 Calibration Generator.[a,b]

[a]Used for calibration procedure only.

[b]Requires a TM 500 series power module.

http://manoman.sqhill.com

Table 5-1 (cont)

Description	Minimum Specifications	Usage	Examples
10. 50 Ω Signal Pickoff	Frequency response, 50 kHz to 100 MHz; impedance 50 Ω for signal input, signal output and trigger output.	Trigger checks and adjustments.	TEKTRONIX CT-3 signal pickoff. Part Number 017-0061-00.
11. Cable (2 required)	Impedance, 50 Ω; Length, 43 inches; Connectors, BNC.	Signal interconnection.	Tektronix Part Number 012-0057-01.
12. Cable (2 required)	Impedance, 50 Ω; Length, 20 inches; Connectors, BNC.	Signal interconnection.	Tektronix Part Number 012-0076-00.
13. Adapter	Connectors, GR874 to BNC female.	Vertical compensation: Trigger adjustments. (Required with CT-3.)	Tektronix Part Number 017-0063-00.
14. Adapter	Connectors, GR874 to BNC male.	Trigger adjustment; signal interconnection.	Tektronix Part Number 017-0064-00.
15. Adapter	Connectors, BNC female to BNC female.	Signal interconnection.	Tektronix Part Number 103-0028-00.
16. Dual-Input Coupler[c] (2 required)	Connectors, BNC female to 2 BNC male.	Vertical checks, trigger checks and adjustments, X-Y Phase check.	Tektronix Part Number 067-0525-02.
17. T Connector	Connectors, BNC.	Signal interconnection.	Tektronix Part Number 103-0030-00.
18. 10X Attenuator (2 required)	Ratio, 10X; impedance 50 Ω; connectors, BNC.	Vertical compensation; Vertical bandwidth check; Trigger adjustments.	Tektronix Part Number 011-0059-02.
19. 5X Attenuator	Ratio, 5X; impedance 50 Ω; connectors, BNC.	Vertical system compensation adjustments; Trigger adjustments.	Tektronix Part Number 011-0060-02.
20. 2X Attenuator	Ratio, 2X; impedance 50 Ω; connectors, BNC.	Vertical system compensation.	Tektronix Part Number 011-0069-02.
21. Termination (2 required)	Impedance, 50 Ω; connectors, BNC.	Signal termination.	Tektronix Part Number 011-0049-01.

[c]The dual-input couplers (Item in the Equipment Required List) are needed for common-mode and X-Y checks. They also permit faster trigger calibration and checking. A direct substitute can easily be made by connecting two short, 50 Ω, BNC cables and a BNC female-to-female adapter to a BNC T connector.

Description	Tektronix Part Number
2—50 Ω BNC cables, 8 inches long	012-0118-00
1—BNC female-to-female adapter	103-0028-00
1—BNC T connector	103-0030-00

http://manoman.sqhill.com

Table 5-1 (cont)

Description	Minimum Specifications	Usage	Examples
22. Adapter	Connectors, BNC male to miniature probe tip.	Vertical input attenuator compensation.	Tektronix Part Number 013-0084-01.
23. Screwdriver	Length, three-inch shaft; bit size, 3/32 inch.	Adjust variable resistors.	Xcelite R-3323.
24. Low-Capacitance Screwdriver	Length, 1-inch shaft; bit size, 3/32 inch.	Adjust all variable capacitors.	J.F.D. Electronics Corp. Adjustment Tool, Number 5284.
25. Light Shield	Folding viewing hood.	Horizontal, delay-time jitter.	Tektronix Part Number 016-0592-00. (Standard Accessory for the 466.)
26. Shorting Strap		Calibrator adjustment.	Two-inch length of #20 or larger insulated wire with alligator clip attached to each end.

CABINET REMOVAL

WARNING

High voltages exist at several points throughout this instrument. Disconnect power before cleaning the instrument or replacing parts. When the instrument is operated with the cover removed, do not touch exposed connections or components. Some transistors may have elevated cases.

The instrument wrap-around cabinet can be removed in the following manner:

1. Disconnect the instrument power cord from the power source.

2. Install the front-panel cover and set instrument face down on a flat surface.

3. Unwrap the power cord from the instrument feet.

4. Completely loosen the six screws indicated in Fig. 5-1 and remove the rear cabinet frame (with feet and screws) from the instrument as an intact assembly.

CAUTION

When reinstalling the cabinet over the chassis, avoid pinching cables or damaging components that protrude from the circuit boards.

5. Slide the wrap-around cabinet up and over the back to remove the oscilloscope. To replace the instrument in its wrap-around cabinet, reverse the removal procedure.

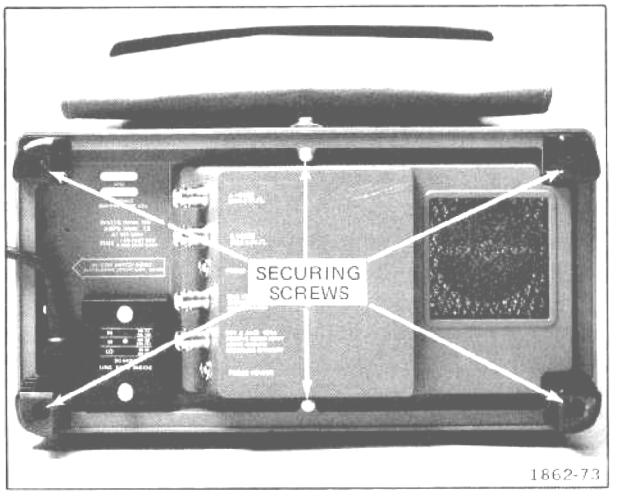

Fig. 5-1. Typical rear cabinet frame removal.

http://manoman.sqhill.com

A. POWER SUPPLIES AND CALIBRATOR

Equipment Required

1. Digital Multimeter
2. DC Voltmeter
3. Test Oscilloscope (with 10X probe and 1X probe)
4. Autotransformer
5. Three-Inch Screwdriver
6. Shorting Strap

See ADJUSTMENT LOCATIONS 1 pull-out page for adjustments and test points (TP).

466 Control Settings:

Power

Regulating Range Selector	Medium
Line Voltage Selector	115 V
POWER	ON

Display

REDUCED SCAN (PULL)	Push INTEN in
INTEN	Midrange
FOCUS	Midrange
SCALE ILLUM	As desired
ASTIG	Best defined trace

Vertical (CH 1 and CH 2)

VERT MODE	CH 1
POSITION	Midrange
VOLTS/DIV	5 mV
VAR VOLTS/DIV	Calibrated detent
AC-GND-DC	DC
INVERT	Normal (button out)
20 MHz BW LIMIT	Full bandwidth (button out)

Storage

NON STORE	On (button in)
STORAGE LEVEL	NORM
SAVE INTEN	Midrange
SAVE	Off (button out)
VIEW TIME	NORM

Trigger (A and B)

COUPLING	AC
LEVEL	Midrange
SLOPE	+
A TRIGGER SOURCE	NORM
B (DLY'D) TRIGGER SOURCE	STARTS AFTER DELAY
TRIG MODE	AUTO
A TRIG HOLDOFF	NORM

Sweep (A and B)

HORIZ DISPLAY	A
A TIME/DIV	1 ms
B TIME/DIV	1 ms
VAR TIME/DIV	Calibrated detent
DELAY TIME POSITION	Fully counterclockwise
X10 MAG	Off (button out)
POSITION (horizontal)	Midrange
FINE	Midrange

Preliminary

a. Check that the Line Voltage Selector switch (located on side panel), indicates the correct nominal line voltage. The oscilloscope is shipped from the factory with this switch set for 115 Vac, unless otherwise specified. Verify this setting. If the line voltage is changed to 230 V line, the fuse should also be changed. (See parts list for correct value.)

b. Set the Regulating Range Selector (located on the rear panel) to indicate the correct nominal line voltage range.

c. Connect the 466 to the correct line voltage source.

d. Pull POWER switch on. Within less than one minute, a baseline trace should appear within the display area. Allow at least 20 minutes warmup at an ambient temperature between +20°C and +30°C for checking instrument to accuracies specified.

http://manoman.sqhill.com

1. Check/Adjust Power Supply DC Levels and Ripple

NOTE

Review the important information at the beginning of the Calibration section before starting calibration.

a. Connect digital multimeter between test point given in Table 5-2 and ground on Interface board.

CHECK—

Table 5-2
LOW-VOLTAGE POWER SUPPLY LIMITS

Power Supply	Test Point	Tolerance	Reading
+65 V	+65 V	±0.5%	+64.67 to +65.33
+15 V	+15 V	±1.5%	+14.77 to +15.23
+5 V	+5 V	±1.5%	+4.92 to +5.08
−8 V	−8 V	±1.5%	−7.88 to −8.12
−15 V	−15 V	±1.5%	−14.77 to −15.23
+140 V	+140 V	±5.0%	+133 to +147

NOTE

If the adjustment in step 1b is made, the oscilloscope will require complete recalibration.

b. Connect digital multimeter between +65 V test point and ground on Interface board.

ADJUST—+65 V Supply (R1736) for +65.00 V. Recheck the power supplies to the tolerances listed in Table 5-3.

CHECK—

Table 5-3
LOW-VOLTAGE POWER SUPPLY LIMITS

Power Supply	Test Point	Tolerance	Reading
+65 V	+65 V	±0.1%	+64.93 to +65.07
+15 V	+15 V	±0.7%	+14.89 to +15.11
+5 V	+5 V	±0.7%	+4.96 to +5.04
−8 V	−8 V	±0.7%	−7.88 to −8.12
−15 V	−15 V	±0.7%	−15.89 to −15.11
+140 V	+140 V	±5.0%	+133 to +147

c. Disconnect digital multimeter and connect test oscilloscope to +65 V test point and ground on Interface board. Check ripple amplitude while varying autotransformer between 103.5 to 126.5 Vac (see Table 5-4).

CHECK—

Table 5-4
TYPICAL LOW-VOLTAGE POWER SUPPLY RIPPLE

Power Supply	Test Point	Typical Ripple (peak-to-peak)
+65 V	+65 V	4 mV
+15 V	+15 V	2 mV
+5 V	+5 V	2 mV
−8 V	−8 V	2 mV
−15 V	−15 V	2 mV
+140 V	+140 V	300 mV

d. Return line voltage to 115 V and disconnect test oscilloscope.

2. Check High Voltage

a. Verify NON STORE button is pushed in and INTEN-REDUCED SCAN (PULL) button is pushed in.

b. Connect dc voltmeter between TP1501 and ground on Interface board.

CHECK—Crt cathode voltage is −1470 V, within 2% (−1440 V to −1500 V).

c. Disconnect dc voltmeter

3. Check/Adjust Calibrator Accuracy

a. Connect shorting strap from TP1367 to TP1372.

b. Connect digital multimeter between ground and CALIBRATOR current loop.

CHECK—Calibrator dc level is 300 mV, within 0.5% from +20°C to +30°C (298.5 to 301.5 mV) or 1.0% from 0°C to +40°C (297 to 303 mV) or 1.5% from −15°C to +55°C (295.5 to 304.5 mV).

http://manoman.sqhill.com

ADJUST—Amplitude (R1375) for 300 mV.

c. Remove shorting strap.

d. Disconnect digital multimeter.

e. Set test oscilloscope:

Volts/Div	10 mV
Time/Div	0.2 ms

f. Connect 10X probe to CALIBRATOR current loop.

CHECK—Calibrator frequency is 1 kHz within 25%; 0.8 ms (4 div) to 1.33 ms (6.65 div) per cycle.

g. Remove 10X probe.

http://manoman.sqhill.com

B. DISPLAY AND Z-AXIS

Equipment Required

1. Digital Multimeter
2. Time-Mark Generator
3. Test Oscilloscope
4. 10X Probe
5. 50 Ω BNC Cable
6. 50 Ω BNC Termination
7. Three-inch Screwdriver
8. Low-Capacitance Screwdriver

See ADJUSTMENT LOCATIONS 1 pull-out page for adjustments and test points (TP).

466 Control Settings (*Indicates changes from the previous step)

POWER	ON

Display

REDUCED SCAN (PULL)	Push INTEN in
*INTEN	*Fully counterclockwise
FOCUS	Midrange
SCALE ILLUM	As desired
ASTIG	Best defined trace

Vertical (CH 1 and CH 2)

VERT MODE	CH 1
POSITION	Midrange
VOLTS/DIV	5 mV
VAR VOLTS/DIV	Calibrated detent
*AC-GND-DC	*GND
INVERT	Normal (button out)
20 MHz BW LIMIT	Full bandwidth (button out)

Storage

NON STORE	On (button in)
STORAGE LEVEL	NORM
INTEN (SAVE)	Midrange
SAVE	Off (button out)
VIEW TIME	NORM

Trigger (A and B)

COUPLING	AC
LEVEL	Midrange
SLOPE	+
A TRIGGER SOURCE	NORM
B (DLY'D) TRIGGER SOURCE	STARTS AFTER DELAY
TRIG MODE	AUTO
A TRIG HOLDOFF	NORM

Sweep (A and B)

*A TIME/DIV	*X-Y
*B TIME/DIV	*X-Y
VAR TIME/DIV	Calibrated detent
DELAY TIME POSITION	Fully counterclockwise
HORIZ DISPLAY	A
X10 MAG	Off (button out)
POSITION (horizontal)	Midrange
FINE	Midrange

1. Adjust Crt Grid Bias

a. Connect digital multimeter between TP1443 and ground.

b. Set INTEN control for +20 V and SCALE ILLUM to off (fully counterclockwise).

CHECK—Crt display for well-defined, low-intensity dot, using FOCUS and ASTIG controls as needed.

ADJUST—Crt Grid Bias (R1454) for dimmest, visible dot.

c. Disconnect digital multimeter.

2. Adjust Trace Alignment

a. Set:

A TIME/DIV	.5 ms
INTEN	Midrange

http://manoman.sqhill.com

b. Position trace to center horizontal graticule line.

CHECK—Trace is parallel with center horizontal line.

ADJUST—TRACE ROTATION (front-panel adjustment) to make trace parallel to center horizontal line.

3. Adjust Display Controls, Y-Axis Alignment and Geometry

a. Set:

CH 1 AC-GND-DC	DC
CH 1 VOLTS/DIV	0.1 V

b. Connect 1 ms time marks from time-mark generator to CH 1 Input connector via 50 Ω cable and 50 Ω termination.

c. Adjust VAR TIME/DIV control for 1 time mark/major div, then set time-mark generator for .1 ms (10 time marks/large div).

CHECK—Center time-mark tilt is 0.1 div or less, when compared to center vertical graticule line.

ADJUST—Y-Axis Alignment (R1563) to align center time mark with center vertical graticule line.

INTERACTION—Y-Axis Alignment and TRACE ROTATION adjustments. Readjust until there is minimum interaction.

CHECK—Vertical curvature of time marks across graticule area is 0.1 div or less.

ADJUST—Geometry (R1556) for minimum curvature of time marks.

d. Remove time marks from CH 1 Input.

CHECK—Trace curvature is 0.1 div or less, when positioned from graticule top to bottom.

INTERACTION—Geometry (R1556) and Y-Axis Alignment (R1563) adjustments. Adjust both for optimum response.

4. Adjust Z-Axis Compensation

a. Connect test oscilloscope 10X probe to TP1443. Set test oscilloscope vertical input to ac and Volts/div to 5 V (with probe). Adjust trigger, intensity and position controls to center signal in display area.

b. Set oscilloscope under test A TIME/DIV switch to .05 μs, VAR TIME/DIV to calibrated detent, and INTEN control to produce a 15 V display on the test oscilloscope.

c. Set test oscilloscope Time/div to .2 μs and center the unblanking gate signal within the display area.

CHECK—Display for best square corner on unblanking gate signal.

ADJUST—Z-Axis Compensation (C1435), using low capacitance screwdriver, for best square corner on unblanking gate signal.

d. Disconnect test equipment setup.

http://manoman.sqhill.com

C. VERTICAL

Equipment Required

1. Amplitude Calibrator
2. Test Oscilloscope (only if gain requires complete recalibration)
3. Square-Wave Generator
4. Leveled Sine-Wave Generator
5. 2 10X Probes (one should have Scale-Factor Switching, however an 11 kΩ resistor may be substituted in step 1 part a).
6. 50 Ω BNC Cable (2 required)
7. Dual-Input Coupler
8. 2X or 5X BNC Attenuator
9. 10X BNC Attenuator (2 required)
10. 50 Ω BNC Termination (2 required)
11. Low-Capacitance Screwdriver
12. Screwdriver
13. BNC-to-probe tip adapter

See ADJUSTMENT LOCATIONS 2 pull-out page for adjustments and test points (TP).

466 Control Settings (*Indicates changes from the previous step)

POWER	ON

Display

REDUCED SCAN (PULL)	OFF (push INTEN in)
INTEN	As desired
FOCUS	For optimum definition
SCALE ILLUM	As desired
ASTIG	Best defined trace

Vertical (CH 1 and CH 2)

VERT MODE	CH 1
POSITION	Midrange
*VOLTS/DIV	*5 mV
VAR VOLTS/DIV	Calibrated detent
*AC-GND-DC	*DC
INVERT	Normal (button out)
20 MHz BW LIMIT	Full bandwidth (button out)

Storage

NON STORE	On (button in)
STORAGE LEVEL	NORM
SAVE INTEN	Midrange
SAVE	Off (button out)
VIEW TIME	NORM

Trigger (A and B)

COUPLING	AC
LEVEL	As needed for stable display
SLOPE	+
A TRIGGER SOURCE	NORM
B (DLY'D) TRIGGER SOURCE	STARTS AFTER DELAY
TRIG MODE	AUTO
A TRIG HOLDOFF	NORM

Sweep (A and B)

HORIZ DISPLAY	A
*A TIME/DIV	*1 ms
*B TIME/DIV	*1 ms
*VAR TIME/DIV	*Calibrated detent
DELAY TIME POSITION	Fully counterclockwise
X10 MAG	Off (button out)
POSITION (horizontal)	Midrange
FINE	Midrange

1. Check Probe Indicator

a. Connect a 10X probe with a scale-factor switching connector to CH 1 input (if no scale-factor switching probe is available, an 11 kΩ resistor may be used. Connect the resistor between ground and the metal coding ring on the input connector.)

CHECK—5 mV LED is extinguished and 50 mV LED is on.

http://manoman.sqhill.com

b. Set VERT MODE switch to CH 2 and move probe to CH 2 input.

CHECK—5 mV LED is extinguished and 50 mV LED is on.

c. Remove 10X probe.

2. Check Input Coupling Switches

a. Connect 20 mV standard amplitude signal from calibration generator to CH 2 input via 50 Ω cable.

b. Position bottom of display to center horizontal graticule line and set CH 2 AC-GND-DC switch to GND.

CHECK—No vertical deflection; trace is at center horizontal graticule line.

c. Set CH 2 Input coupling to AC.

CHECK—Display is centered about center horizontal graticule line.

d. Set VERT MODE switch to CH 1 and move test signal to CH 1.

e. Position bottom of display to center horizontal graticule line.

f. Set CH 1 AC-GND-DC switch to GND.

CHECK—No vertical deflection; trace is at center horizontal graticule line.

g. Set CH 1 AC-GND-DC switch to AC.

CHECK—Display is centered about center horizontal graticule line.

h. Disconnect square-wave signal.

3. Check Alternate Mode

a. Set:

VERT MODE	ALT (CHOP/ALT: out)
A TRIGGER LEVEL	Fully clockwise

b. Position two traces about 2 divisions apart.

CHECK—Sweeps alternate for all A TIME/DIV settings except X-Y.

4. Check Chop Mode

a. Set:

A TIME/DIV	1 μs
VERT MODE	CHOP (CHOP/ALT: in)
AC-GND-DC (both)	GND
A TRIGGER COUPLING	HF REJ
A TRIGGER LEVEL	As needed for stable display

b. Position two traces about 4 divisions apart and set A TRIGGER LEVEL control for a stable display.

CHECK—Vertical Switching transients are completely blanked between horizontal chopped segments.

CHECK—Duration of each cycle is about 2 divisions.

c. Set:

VERT MODE	CH 1
AC-GND-DC (both)	DC
CH 1 VOLTS/DIV	.2 V
A TRIGGER COUPLING	AC

5. Adjust Output Amplifier Bias

NOTE

The final adjustment of R478 (Bias Adj) should achieve a compromise between maximum signal amplitude, optimum transient response, and minimum position effect. R478 adjustment is covered in Step 5, part b and later steps in this procedure. Severe misadjustment of R478 may result in loss of gain, or excessive aberrations when display is in some vertical positions.

http://manoman.sqhill.com

RECALIBRATION—Do not adjust at this time—instead, move to Step 6 and complete the checks or adjustments in Steps 6 through 26. For calibration after repair or replacement of vertical components—do Step 5.

If calibration requirements are met, there is no need to make this adjustment. If position effect, aberrations and risetime requirements are not met, then make this adjustment.

After the adjustment, do Steps 6 through 26. If calibration requirements are still not met, the setting of bias adjustment may be compromised to meet position effect, aberations and risetime.

a. Connect 100 MHz signal from leveled sine-wave generator to CH 1 input via 50 Ω cable and 50 Ω termination. Adjust generator for approximately 4 div of signal display.

b. ADJUST—Bias Adj (R478) for maximum signal.

c. Disconnect test equipment.

6. Check Beam Finder

a. Push in BEAM FINDER button and hold.

CHECK—Trace remains visible and entirely on screen, regardless of the setting of vertical POSITION, horizontal POSITION, and/or INTENSITY controls.

b. Release BEAM FINDER button.

7. Check/Adjust CH 1 Var Volts/Div Balance and Var Indicator

a. Position trace to center horizontal graticule line.

CHECK—CH 1 UNCAL LED is on when VAR control is out of detent.

CHECK—Trace shift of 1.0 div or less when rotating VAR control through its range.

ADJUST—CH 1 Var Bal (R3484) for minimum trace shift while rotating CH 1 VAR control through its range.

b. Return CH 1 VAR control to detent position.

8. Check/Adjust CH 1 Position Centering

a. Connect about 50 kHz signal from leveled sine-wave generator to CH 1 input via 50 Ω cable and 50 Ω termination.

b. Set:

CH 1 VOLTS/DIV	.2 V
CH 1 AC-GND-DC	AC
A TIME/DIV	1 ms

c. Adjust generator for 2.4 div display; then change CH 1 VOLTS/DIV switch to 20 mV without moving the VAR control.

CHECK—Top of display positions down to center horizontal graticule line or below, bottom of display positions up to center horizontal graticule line or above.

ADJUST—CH 1 Pos Ctr (R3135) so display positions same distance above and below graticule center line.

d. Disconnect generator.

9. Check/Adjust CH 2 Var Volts/Div Balance and Var Indicator

a. Set VERT MODE switch to CH 2 and position trace to center horizontal graticule line.

CHECK—CH 2 UNCAL LED is on when VAR control is out of detent.

CHECK—Trace shift of 1.0 div or less when rotating VAR control through its range.

ADJUST—CH 2 Var Bal (R3884) for minimum trace shift while rotating CH 2 VAR control through its range.

b. Return CH 2 VAR control to detent position.

10. Check/Adjust CH 2 Invert Balance

a. Set CH 2 AC-GND-DC to GND.

b. Position trace to center horizontal graticule line and push INVERT button.

http://manoman.sqhill.com

CHECK—Trace shift is .2 div or less when switching from normal to inverted.

ADJUST—Invert Bal (R3975) for minimum trace shift.

INTERACTION—Invert Bal (R3975) and Var Bal (R3884). Readjust as needed for no visible interaction.

11. Check/Adjust CH 2 Position Centering

a. Connect about 50 kHz signal from leveled sine-wave generator to CH 2 input via 50 Ω cable and 50 Ω termination.

b. Set:

INVERT	Normal (button out)
CH 2 VOLTS/DIV	.2 V
CH 2 AC-GND-DC	AC
A TRIG LEVEL	Fully clockwise

c. Adjust generator for 2.4 div display—then change CH 2 VOLTS/DIV switch to 20 mV without moving VAR control.

CHECK—Top of display positions down to center horizontal graticule line or below, bottom of display positions up to center horizontal graticule line or above.

ADJUST—CH 2 Pos Ctr (R3735) so display positions same distance above and below graticule line.

d. Disconnect generator.

12. Check CH 2 and CH 1 Gate Current

a. Set:

AC-GND-DC (both)	GND
VOLTS/DIV (both)	5 mV

b. Position trace to graticule center and change AC-GND-DC switch to DC.

CHECK—Trace shift is 0.1 div or less, when switching between GND and DC.

c. Change VERT MODE to CH 1, position trace to graticule center and change AC-GND-DC switch to DC.

CHECK—Trace shift is 0.1 div or less, when switching between GND and DC.

d. Set both AC-GND-DC switches to DC.

13. Check/Adjust Gain

NOTE

It is not always necessary to do a complete recalibration to meet instrument gain specifications. Use following sequence to determine needed adjustments.

a. CHECK—Step 13 parts (a), (b), and (f). Note CH 1 5 mV/DIV accuracy.

b. CHECK—Step 13 parts (g) and (h). Note CH 2 5 mV/DIV accuracy.

(1). If both channels are within 3%, continue with parts (i) through (k) and remainder of procedure.

(2). If error exceeds 3% and both channels have an error of the same polarity (for example—CH 1 is +4% and CH 2 is +2%) adjust the smaller error to zero using Output Gain Adj R415 then adjust either CH 1 Gain Adj (R3482) or CH 2 Gain Adj (R3882) to remove the remaining error (for example—CH 1 error is +4% and CH 2 is +2%. Adjust Output Gain Adj to change the error for CH 2 to 0% and CH 1 to +2%. Then adjust CH 1 Gain Adj to reduce CH 1 error to 0%.)

(3). If error exceeds 3% and the channels have an error of opposite polarity (for example—CH 1 is +4% and CH 2 is −2%) adjust the larger error to match the lesser error, using either CH 1 Gain Adj (R3842) or CH 2 Gain Adj (R3882) then adjust Output Gain Adj R415 to remove the remaining error (for example—CH 1 error is +4% and CH 2 is −2%. Adjust CH 1 Gain Adj to change the error of CH 1 to −2%. Then Adjust Output Gain Adj to reduce CH 1 and CH 2 errors to 0%.)

c. If any gain adjustment has insufficient adjustment range, a complete gain recalibration is needed. Start with Step 13 part (a) and continue. This establishes a typical CH 1 output used as a reference for setting output gain.

(a). Set:

VERT MODE	CH 1
CH 1 VOLTS/DIV	5 mV
CH 1 AC-GND-DC	DC

http://manoman.sqhill.com

(b). Connect 20 mV standard amplitude signal from calibration generator to CH 1 input via 50 Ω cable.

(c). Set:

Test Oscilloscope Controls

Vertical mode	Add
Channel 2	Invert
Volts/Div (both)	.1 V (with 10X probe)
Triggering	For free-running sweep

(d). Connect two 10X probes from test oscilloscope to TP3319 and TP3519 on preamp board.

CHECK—Signal between TP3319 and TP3519 is 400 mV peak-to-peak (4 div).

ADJUST—CH 1 Gain Adj (R3482) for 400 mV peak-to-peak. (NOTE: This is a nominal value for this adjustment. It may be reset to obtain correct CH 1 input-to-display gain.)

(e). Remove 10X probes from TP3319 and TP3519.

(f). Observe crt display.

CHECK—Display is 4 div within 3% (±0.12 div).

ADJUST—Output Gain Adj R415 for 4 div display.

(g). Set:

VERT MODE	CH 2
CH 2 VOLTS/DIV	5 mV
CH 2 AC-GND-DC	DC

(h). Connect 20 mV standard amplitude signal from amplitude calibrator to CH 2 input via 50 Ω cable.

CHECK—Display is 4 div within 3% (±0.12 div).

ADJUST—CH 2 Gain Adj (R3882) for 4 div display.

(i). Change VOLTS/DIV and calibration generator settings as shown in Table 5-5.

CHECK—Display is either 5 div ±0.15 div or 4 div ±0.12 div.

(j). Set:

VERT MODE	CH 1
CH 1 VOLTS/DIV	5 mV
CH 1 AC-GND-DC	DC

Table 5-5
VERTICAL DEFLECTION ACCURACY

VOLTS/DIV Setting	Amplitude Calibrator Signal	Deflection in Div for 3% Accuracy		Reading in Div
		Divisions	Accuracy	
10 m	50 mV	5	±0.15 div	4.85 to 5.15
20 m	0.1 V	5	±0.15 div	4.85 to 5.15
50 m	0.2 V	4	±0.12 div	3.88 to 4.12
.1	0.5 V	5	±0.15 div	4.85 to 5.15
.2	1 V	5	±0.15 div	4.85 to 5.15
.5	2 V	4	±0.12 div	3.88 to 4.12
1	5 V	5	±0.15 div	4.85 to 5.15
2	10 V	5	±0.15 div	4.85 to 5.15
5	20 V	4	±0.12 div	3.88 to 4.12

http://manoman.sqhill.com

(k). Connect 20 mV standard amplitude signal from the amplitude calibrator to CH 1 input via 50 Ω cable.

CHECK—Display is either 5 div ±0.15 div or 4 div ±0.12 div. Check all VOLTS/DIV settings. See Table 5-5.

14. Check CH 1 and CH 2 Var Volts/Div Range

a. Set both VOLTS/DIV switches to 10 mV and amplitude calibrator for 50 mV signal.

b. Rotate CH 1 VAR control fully counterclockwise.

CHECK—Display reduces to 2 div or less.

c. Move signal to CH 2 Input connector and set VERT MODE switch to CH 2.

d. Rotate CH 2 VAR control fully counterclockwise.

CHECK—Display reduces to 2 div or less.

e. Return both VAR controls to detent position.

15. Check Add Mode

a. Set:

VOLTS/DIV (both)	5 mV
VERT MODE	ADD
INVERT	Normal (button out)

b. Connect 10 mV standard amplitude signal from amplitude calibrator to both inputs via 50 Ω cables and dual-input coupler.

CHECK—Display of 4 div, ±3%, if gain adjustments in Step 13 were not changed, or 4 div, ±1%, if gain adjustments in Step 13 were changed.

16. Check Compression and Expansion

a. Set:

CH 2 AC-GND-DC	GND
VERT MODE	CH 1

b. Adjust CH 1 VAR control for 2 div display centered about center horizontal graticule line.

c. Position top of display to top graticule line.

CHECK—Display compression or expansion is 0.1 div or less.

d. Position bottom of display to bottom graticule line.

CHECK—Display compression or expansion is 0.1 div or less.

e. Set CH 1 VAR control to detent position.

f. Disconnect amplitude calibrator and dual-input coupler.

17. Check/Adjust Output Low-Frequency Compensation

a. Set:

A TIME/DIV	0.2 ms
VERT MODE	CH 1
AC-GND-DC (both)	DC
VOLTS/DIV (both)	5 mV
A TRIG LEVEL	As needed for stable display

b. Connect fast-rise, + output of square-wave generator to CH 1 via a 50 Ω cable, 10X attenuator, and 50 Ω termination.

c. Adjust square-wave generator to maintain 5 div display throughout Step 17.

d. Adjust square-wave generator for signal indicated in Table 5-6.

Table 5-6
MAXIMUM OVERSHOOT OR ROLL-OFF

Square-Wave Generator Signal	A TIME/DIV Setting	Maximum Overshoot or Roll-off in div
100 Hz	2 ms	±0.15
1 kHz	.2 ms	±0.15
10 kHz	20 μs	±0.15
100 kHz	2 μs	±0.15

http://manoman.sqhill.com

CHECK—Display overshoot or roll-off is within 3% (±0.15 div).

e. If above checks are within 3%, proceed to Step 18.

f. If not, make following adjustments for best flat-top waveform.

g. Unplug the cable connector from J919 (Vert Alt Sync from the Trigger board) and insert the P919 plug into a bnc-female-to-coaxial-cable-connector adapter (Tektronix part number 131-1315-01). Connect the square-wave output of the low-frequency sine-wave generator to the bnc-to-cable-connector adapter via a 50 Ω bnc cable. Set the generator output frequency to 1 kHz and adjust CH 1 and CH 2 Vertical POSITION controls for a 6-division display. Adjust the A TRIGGER LEVEL control for a stable display. Presentation will be a square wave when the CH 1 and CH 2 traces alternate at the generator frequency.

NOTE

As an alternate signal source, use the fast-rise − (minus) output of the calibration generator. Do not terminate the cable and adjust the output amplitude to maximum. Any other signal source used must be TTL compatible to supply the proper logic voltage levels to drive the Vertical Switching Logic circuit.

h. ADJUST—Vertical Output LF Compensation for the best flat top on the display, using the settings and adjustments given in Table 5-7. Rounding or overshoot must be 3% or less.

Table 5-7
VERTICAL OUTPUT LOW-FREQUENCY COMPENSATION ADJUSTMENTS

Square-Wave Generator Signal	A TIME/DIV Setting	Output Adjustment
100 Hz	2 ms	R444
1 kHz	.2 ms	R445
10 kHz	20 μs	R446
100 kHz	2 μs	R453

i. INTERACTION—Repeat 100 Hz, 1 kHz, 10 kHz, and 100 kHz adjustments until no further improvement is obtained.

j. Unplug the P919 cable connector from the bnc-to-cable-connector adapter and plug the connector back into J919.

k. Set:

A TIME/DIV	0.2 ms
VERT MODE	CH 1
A TRIGGER SLOPE	+ (plus)

l. Connect a 1 kHz, fast-rise + signal to the CH 1 input connector via a 50 Ω bnc cable, a 10X attenuator, and a 50 Ω bnc termination. Set the generator for a 6-division display and adjust the A TRIGGER LEVEL control for a stable display.

m. ADJUST—CH 1 LF Compensation for the best flat top on the display, using the settings and adjustments given in Table 5-8. Rounding or overshoot must be 3% or less.

Table 5-8
CH 1 LOW-FREQUENCY COMPENSATION

Square-Wave Frequency	TIME/DIV Switch Setting	Adjustment Circuit Number
1 kHz	0.2 ms	R3176
10 kHz	20 μs	R3185

n. Move the test signal from the CH 1 input to the CH 2 input and set the VERT MODE switches to display CH 2 only.

o. ADJUST—CH 2 LF Compensation for the best flat top on the display, using the settings and adjustments given in Table 5-9. Rounding or overshoot must be 3% or less.

Table 5-9
CH 2 LOW-FREQUENCY COMPENSATION

Square-Wave Frequency	TIME/DIV Switch Setting	Adjustment Circuit Number
1 kHz	0.2 ms	R3580
10 kHz	20 μs	R3582
100 kHz	2 μs	R453 for best compromise between CH 1 and CH 2.

p. Disconnect the fast-rise + signal from the 466.

http://manoman.sghill.com

18. Check/Adjust CH 1 Volts/Div Compensation

NOTE

C10, in the CH 1 Preamp, is set at the factory to give C10, in the CH 2 Preamp, enough range to match CH 2 input capacitance with CH 1 input capacitance. Unless there is a circuit malfunction, the CH 1 C10 should not need readjustment. When adjusting either C10 or other adjustments in this section, if the low-capacity screwdriver contains a metal bit, the metal may affect the adjustment. Check adjustment after the screwdriver is removed, and readjust as necessary.

a. Set:

VOLTS/DIV (Both)	5 mV (see note)
VERT MODE	CH 1
A TIME/DIV	.2 ms (see note)
20 MHz BW LIMIT	Limited bandwidth (button in)

NOTE

In steps 18 and 19, all VOLTS/DIV settings assume the use of a 10X probe with Scale-Factor switching (preferably the probe supplied as a standard accessory with the oscilloscope you are calibrating). If it is necessary to use a 10X probe without Scale-Factor switching, set the VOLTS/DIV knob to indicate one-tenth of the setting listed (5 mV instead of 50 mV, etc). When adjusting compensation, one adjustment will affect the waveform front corner, and another will affect the flat top. Ignore the front corner when making the flat top adjustment and vice-versa. The A TIME/DIV should be set to 1 ms for the flat top and to .2 ms for front corner checks and adjustments.

b. Connect a 10X probe to the CH 1 input (note that the VOLTS/DIV Scale-Factor switching will now indicate 50 mV).

c. Connect the square-wave generator high-amplitude output to either a 2X, 5X, or 10X BNC attenuator (depending on generator amplitude), to a 50 Ω BNC termination, to a BNC-to-probe tip adapter, to the tip of the 10X probe.

d. Adjust the square-wave generator for a 5 division, 1 kHz display and add or remove attenuators and termination as needed to maintain a 5 division display throughout Steps 18 and 19.

e. Adjust the probe compensation adjustment for the best flat-top waveform. Do not readjust probe compensation throughout the remainder of Steps 18 and 19.

f. Set VOLTS/DIV to .1 V.

g. CHECK—Compensation for all VOLTS/DIV settings listed in Table 5-10 for display overshoot, roll-off, and flat-top within 2% (5 div ±0.1 div). If all settings are within 2%, skip part h, otherwise perform part h.

h. ADJUST—Any adjustment pair (see Table 5-10) as necessary so compensation for all settings is within 2%.

Table 5-10
VOLTS/DIV COMPENSATION

VOLTS/DIV Setting (10X Scale-Factor)	Adjust	
	(T/Div 1 ms) Flat	(T/Div .2 ms) Corner
.1 V	C37	C36
.2 V	C35	C34
.5 V	C33	C32
1 V	Check	Check
2 V	Check	Check
5 V	C31	C30

19. Adjust CH 2 Volts/Div Compensation

a. Set:

VERT MODE	CH 2

b. Transfer the 10X probe from the CH 1 input to the CH 2 input.

c. Adjust the square-wave generator for a 5 division, 1 kHz display and add or remove attenuators and termination as needed to maintain a 5 division display throughout the remainder of this step.

d. CHECK—The display for a flat-top waveform within 2%.

e. ADJUST—C10 in the CH 2 preamp for the best flat-top waveform using a low-capcitance screwdriver.

http://manoman.sqhill.com

f. Repeat Step 18, parts f through h for CH 2.

g. Disconnect the test setup.

NOTE

If the oscilloscope is to be used primarily with a 50 Ω signal source, more accurate reproduction of the waveform front corner may be achieved by calibrating with a 50 Ω system. To accomplish this, substitute a properly terminated 50 Ω cable for the 10X probe while making the corner adjustments listed in Table 5-10.

20. Check/Adjust CH 2 and Output High-Frequency Compensation

a. Set:

VOLTS/DIV (both)	5 mV
A TRIGGER SLOPE	+
20 MHz BW LIMIT	Full bandwidth (button out)

b. Connect fast-rise + output of square-wave generator to CH 2 input via 50 Ω cable, 10X attenuator and 50 Ω termination.

NOTE

Adjustments in Steps 20 through 26 interact. Perform all the checks, but not the adjustments, in these steps before making any adjustments (unless calibration is being performed after repair or replacement of vertical components).

If all checks are within the given limits, proceed to Step 27.

If not, perform checks and adjustments in Steps 20 through 26, using low-capacitance screwdriver.

If still not within the given limits:—Perform Steps 6 through 26.

If still not within the given limits:—Compromise the adjustment of Vertical Output Bias (R478), setting it to minimize the aberrations in Step 21 parts a and d. (See NOTE preceding Step 5 part a.)

c. Adjust square-wave generator for 100 kHz to 1 MHz display, 5 div high.

d. Set A TIME/DIV to about 0.2 μs.

CHECK—Flat-top display with aberrations typically within 4% (5 div ±0.2 div). See Fig. 5-2 for typical display.

ADJUST—C409, C428, R428, C455, R455, R3685, C3690, R3634, and C3643 for best flat-top waveform with fastest risetime.

e. Connect test setup to fast-rise, − output of square-wave generator.

f. Set A TRIGGER SLOPE to −.

CHECK—Flat-bottom display with aberrations within 5% (5 div ±0.25 div).

INTERACTION—Adjustments in Step 20d affect negative-step aberrations. Optimize risetime and minimum aberrations on both positive- and negative-going displays in Steps 20d and f.

21. Check CH 2 Position Effect

a. Position bottom of display one division down from top graticule line.

CHECK—Display aberrations are within 7% (5 div ±0.35 div).

b. Set A TRIGGER SLOPE control to +.

c. Connect test setup to fast-rise, + output of square-wave generator.

d. Position top of display one division up from bottom graticule line.

CHECK—Display aberrations are within 5% (5 div ±0.25 div).

22. Check/Adjust CH 1 High-Frequency Compensation

a. Set VERT MODE switch to CH 1.

b. Move test signal from CH 2 input to CH 1 input.

CHECK—Flat-top display with aberrations within 3% (5 div ±0.15 div). See Fig. 5-2 for typical display.

http://manoman.sqhill.com

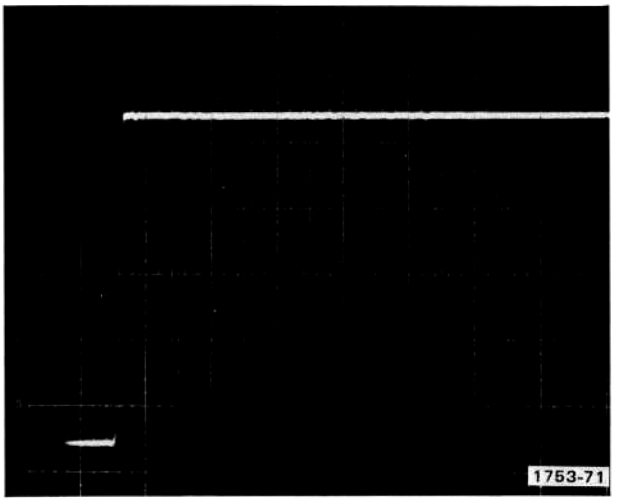

Fig. 5-2. Typical display when high-frequency compensation is correctly adjusted.

ADJUST—R3190, C3192, R3335, and C3342 for best flat-top display.

c. Connect test setup to fast-rise, − output of square-wave generator.

d. Set A TRIGGER SLOPE to −.

CHECK—Flat-bottom display with aberrations within 5% (5 div ±0.25 div).

INTERACTION—Adjustments in Step 22 part b affect negative step. Optimize risetime and minimum aberrations on both positive- and negative-going displays in Step 22 parts b and d.

23. Check CH 1 Position Effect

a. Position bottom of display to top graticule line.

CHECK—Display aberrations are within 7% (5 div ±0.35 div).

b. Set A TRIGGER SLOPE control to +.

c. Connect test setup to fast-rise, positive output of square-wave generator.

d. Position top of display one division up from the bottom graticule line.

CHECK—Display aberrations are within 5% (5 div ±0.25 div).

24. Check CH 1 Transient Response

a. Set A TRIGGER LEVEL to +.

b. Connect output of fast-rise, + output of square-wave generator to CH 1 input via 50 Ω cable, 10X attenuator and 50 Ω termination.

c. Adjust generator and add or remove attenuators to maintain a 5 div display through the 5 mV, 10 mV, 20 mV and 50 mV positions of CH 1 VOLTS/DIV switch.

NOTE

It is possible to obtain more signal intensity. Set Storage Mode switch to VAR PERS and adjust STORAGE LEVEL, VIEW TIME and INTEN controls for most usable trace.

CHECK—Display flat-top and aberrations are within 4% (5 div ±0.20 div).

25. Check CH 2 Transient Response

a. Set VERT MODE to CH 2.

b. Move test setup to CH 2.

c. Adjust generator and add or remove attenuator to maintain a 5 div display through the 5 mV, 10 mV, 20 mV and 50 mV positions of CH 1 VOLTS/DIV switch.

CHECK—Display flat-top and aberrations are within 4% (5 div ±0.20 div).

d. Remove the test setup.

26. Check Bandwidth

a. Set:

A TIME/DIV	.2 ms
CH 2 VOLTS/DIV	5 mV

http://manoman.sqhill.com

b. Connect about 50 kHz reference signal from leveled sine-wave generator to Ch 2 input via 10X attenuator and 50 Ω termination.

c. Adjust generator for 5 div display.

d. Set generator for 100 MHz output frequency.

CHECK—Display amplitude is 3.5 div or more.

e. Repeat Step 26 parts c and d for 10 mV through 1 V positions of VOLTS/DIV switch.

f. Change VERT MODE to CH 1. Change test setup to CH 1 input.

g. Repeat Steps 26 parts c and d for 5 mV through 1 V positions of VOLTS/DIV switch.

h. Disconnect the test setup.

27. Check Cascaded Gain and Bandwidth

a. Set:

VOLTS/DIV (both)	5 mV
AC-GND-DC (both)	AC
VERT MODE	CH 2
A TIME/DIV	1 ms

b. Connect CH 1 VERT SIGNAL OUT (on rear panel) to CH 2 input via 50 Ω cable and 50 Ω termination.

c. Connect 5 mV signal from amplitude calibrator to CH 1 input via 50 Ω cable.

CHECK—Display is 5 div or more.

d. Remove the test setup from CH 1 input.

e. Connect about 50 kHz reference signal from leveled sine-wave generator to CH 1 input via 50 Ω cable, 10X attenuator and 50 Ω termination.

f. Adjust generator for 5 div display.

g. Set the generator for 50 MHz output frequency.

CHECK—Display amplitude is 3.5 div or more.

h. Disconnect the test setup.

28. Check Channel Isolation

a. Set:

CH 2 VOLTS/DIV	.2 V
VERT MODE	CH 2
CH 1 AC-GND-DC	GND

b. Connect 25 MHz signal from leveled sine-wave generator to CH 2 input via 50 Ω cable and 50 Ω termination.

c. Adjust generator for 2 div display.

d. Set:

VOLTS/DIV (both)	20 mV
VERT MODE	CH 1

CHECK—Display amplitude is 0.2 div or less.

e. Move test setup from CH 2 input to CH 1.

f. Set:

CH 1 AC-GND-DC	DC
CH 2 AC-GND-DC	GND

g. Set VERT MODE switch to CH 2.

CHECK—Display amplitude is 0.2 div or less.

h. Disconnect the test setup.

29. Check Common-Mode Rejection Ratio

a. Set:

VOLTS/DIV (both)	5 mV
AC-GND-DC (both)	DC
VERT MODE	CH 1
CH 2 INVERT	Invert (pushed in)

http://manoman.sqhill.com

b. Connect 20 MHz signal from leveled sine-wave generator to CH 1 and CH 2 inputs via 50 Ω cable, 10X attenuator, 50 Ω termination and dual-input coupler.

c. Set generator for 6 div display.

d. Set VERT MODE switch to ADD.

CHECK—Display is 0.6 div or less (indicates CMRR of at least 10:1 at 20 MHz).

e. Proceed to Step 29 part j if CHECK meets requirement.

f. Set VERT MODE switch to CH 1.

g. Set generator for 6 div display of 50 kHz reference signal.

h. Set VERT MODE switch to ADD.

ADJUST—CH 2 Gain Adj (R3882) for minimum display (best CMRR).

i. Set generator for 20 MHz output frequency.

CHECK—Display is 0.6 div or less (indicates CMRR of at least 10:1 at 20 MHz).

j. Release CH 2 INVERT switch and disconnect test setup.

30. Check Bandwidth Limit Operation

a. Set:

20 MHz BW LIMIT	Limited Bandwidth (button in)
CH 1 AC-GND-DC	DC
VERT MODE	CH 1

b. Connect about 50 kHz reference signal from leveled sine-wave generator to Ch 1 input via 50 Ω cable and 50 Ω termination.

c. Set generator for 6 div display.

d. Increase generator output frequency until display is 4.2 div.

CHECK—Generator output frequency is betwen 16 and 24 MHz.

e. Disconnect the test setup.

http://manoman.sqhill.com

D. TRIGGER

Equipment Required

1. Leveled Sine-Wave Generator
2. Low-Frequency Sine-Wave Generator
3. Time-Mark Generator
4. Amplitude Calibrator
5. Square-Wave Generator
6. 50 Ω Signal Pickoff Unit (Type CT-3)
7. 10X Probe
8. 42-inch 50 Ω BNC Cable (2 required)
9. GR-to-BNC Female Adapter
10. 10X BNC Attenuator
11. 50 Ω BNC Termination (2 required)
12. Dual-Input Coupler (2 required)
13. BNC-T Connector
14. 18-inch 50 Ω BNC Cable (2 required)
15. GR-to-BNC Male Adapter
16. Female-to-Female BNC Adapter
17. Screwdriver

See ADJUSTMENT LOCATIONS 3 pull-out pages for adjustments and test points (TP).

466 Control Settings (*Indicates change from previous step)

POWER	ON

Display

REDUCED SCAN (PULL)	Push INTEN in
INTEN	As desired
FOCUS	As desired
SCALE ILLUM	As desired
ASTIG	Best defined trace

Vertical (CH 1 and CH 2)

VERT MODE	CH 1
POSITION	Midrange
*CH 1 VOLTS/DIV	*10 mV
*CH 2 VOLTS/DIV	*.1 V
VAR VOLTS/DIV	Calibrated detent
AC-GND-DC	DC
INVERT	Off (button out)
*20 MHz BW LIMIT	*Full bandwidth (button out)

Storage

NON STORE	On (button in)
STORAGE LEVEL	NORM
SAVE INTEN	Midrange
SAVE	Off (button out)
VIEW TIME	NORM

Trigger (A and B)

COUPLING	AC
LEVEL	Midrange
SLOPE	+
A TRIGGER SOURCE	NORM
*B (DLY'D) TRIGGER SOURCE	*NORM
TRIG MODE	AUTO
A TRIG HOLDOFF	NORM

Sweep (A and B)

HORIZ DISPLAY	A
*A TIME/DIV	*.05 μs
*B TIME/DIV	*.05 μs
VAR TIME/DIV	Calibrated detent
DELAY TIME POSITION	Fully counterclockwise
X10 MAG (IN)	Off (button out)
POSITION (horizontal)	Midrange
FINE	Midrange

1. Check/Adjust A Trigger Sensitivity and Trig Indicator

a. Connect 25 MHz signal from leveled sine-wave generator to A and B External Trigger inputs via 50 Ω cable, GR-to-BNC female adapter, CT-3 thru output, GR-to-BNC male adapter, 10X Attenuator, 50 Ω termination and dual-input coupler.

b. Connect CT-3 Sig Out 10% signal to CH 1 and CH 2 inputs via 50 Ω cable, 50 Ω termination and dual-input coupler.

http://manoman.sqhill.com

c. Set generator for 3 div display.

d. Set CH 1 VOLTS/DIV switch to .1 V (0.3 div display).

CHECK—Stable triggered display obtained by rotating A TRIGGER LEVEL control with SLOPE set to both + and −.

CHECK—TRIG indicator is lit during stable display.

e. Set CH 1 VOLTS/DIV switch to .2 V (0.15 div display).

CHECK—No stable triggered display is obtained by rotating A TRIGGER LEVEL control with SLOPE set to both + and −.

f. If CHECKS in parts d and e meet the requirements, move to Step 2.

g. Set CH 1 VOLTS/DIV switch to 10 mV and adjust generator for 2.5 div display.

h. Set CH 1 VOLTS/DIV switch to .1 V.

ADJUST—A Trig Sens (R654) so stable triggered display is just obtained by rotating A TRIGGER LEVEL control in both + and − slopes.

i. Set CH 1 VOLTS/DIV switch to 10 mV and adjust generator for 3 div display.

j. Set CH 1 VOLTS/DIV switch to .2 V.

CHECK—No stable triggered display is obtained by rotating A TRIGGER LEVEL control. If a stable triggered display is obtained, the trigger is too sensitive. Readjust A Trig Sens (R654) for a stable triggered display with a 0.3 div display but no stable triggered display with a 0.15 div display (see parts d and e).

2. Check/Adjust B Trigger Sensitivity

a. Set:

HORIZ DISPLAY	B DLY'D
CH 1 VOLTS/DIV	10 mV
A TRIGGER LEVEL	Fully clockwise

b. Set leveled sine-wave generator for 3 div display.

c. Set CH 1 VOLTS/DIV switch to .1 V (0.3 div display).

CHECK—Stable triggered display obtained by rotating B TRIGGER LEVEL control with SLOPE set to both + and −.

d. Set CH 1 VOLTS/DIV switch to .2 V (0.15 div display).

CHECK—No stable triggered display is obtained by rotating B TRIGGER LEVEL control.

e. If CHECKS in parts c and d meet requirements, move to Step 3.

f. Set CH 1 VOLTS/DIV switch to 10 mV and adjust generator for 2.5 div display.

g. Set CH 1 VOLTS/DIV switch to .1 V.

ADJUST—B Trig Sens (R554) so stable triggered display is just obtained by rotating B TRIGGER LEVEL control with SLOPE set to both + and −.

h. Set CH 1 VOLTS/DIV switch to 10 mV and adjust generator for 3 div display.

i. Set CH 1 VOLTS/DIV switch to .2 V.

CHECK—No stable triggered display is obtained by rotating B TRIGGER LEVEL control. If a stable triggered display is obtained, the trigger is too sensitive. Readjust B Trig Sens (R554) for a stable triggered display with a 0.3 div display but no stable triggered display with a 0.15 div display (see parts d and e).

3. Check/Adjust B Trigger Slope and Level Centering

a. Set:

TIME/DIV (both)	10 μs
B TRIGGER LEVEL	0
CH 1 VOLTS/DIV	10 mV

b. Set leveled sine-wave generator for 4 div, 50 kHz display.

http://manoman.sqhill.com

c. Vertically center display about center horizontal graticule line. Horizontally move display as needed to view sweep start.

d. Switch the B TRIGGER SLOPE switch between + and −.

CHECK—Display begins at the same vertical point on the center horizontal graticule line, in both + and − slopes.

ADJUST—B Trig Slope Center (R555) for + and − sine-wave portions to start at same point on sine wave.

ADJUST—B Trig Level (R535) for starting point of display to be at graticule center.

4. Check/Adjust A Trigger Slope and Level Centering

a. Set:

HORIZ DISPLAY	A
A TRIGGER LEVEL	0

b. Switch the A TRIGGER SLOPE switch between + and −.

CHECK—Display begins at the same vertical point on the center horizontal graticule line, in both + and − slopes.

ADJUST—A Trig Slope Center (R655) for + and − sine-wave portions to start at same point on sine wave.

ADJUST—A Trig Level (R635) for starting point of display to be at graticule center.

5. Check/Adjust A Trigger DC Levels

a. Set leveled sine-wave generator for 5 div (50 mV) display.

b. Set CH 1 VOLTS/DIV switch to 50 mV and vertically center display about center horizontal graticule line.

c. Adjust A TRIGGER LEVEL control for stable display with both + and − slopes.

NOTE

For parts d, e, and f: A TRIGGER LEVEL control must remain at 0 for proper adjustment. To check or reset the control, change A TRIGGER COUPLING to AC and adjust A TRIGGER LEVEL control for a stable display with both + and − slopes. Return trigger to dc-coupled mode. For all steps: when SOURCE is set to NORM and COUPLING is set to DC, display must be centered vertically on graticule with vertical POSITION control.

d. Set A TRIGGER COUPLING switch to DC.

CHECK—Stable display, starting at graticule center line, with both + and − slopes.

ADJUST—Norm DC Trig Bal (R3202) for stable display, starting at graticule center line, with both + and − slopes.

e. Set A TRIGGER SOURCE switch to CH 1.

CHECK—Stable display, starting at center graticule line, with both + and − slopes.

ADJUST—CH 1 DC Trig Bal (R3126) for stable display, starting at graticule center with both + and − slopes.

f. Set:

A TRIGGER SOURCE	CH 2
VERT MODE	CH 2
CH 2 VOLTS/DIV	50 mV

CHECK—Stable display, vertically centered, starting at center graticule line, with both + and − slopes.

ADJUST—CH 2 DC Trig Bal (R3835) for stable display, starting at graticule center with both + and − slopes.

6. Check B Trigger DC Levels

a. Set:

HORIZ DISPLAY	B DLY'D
VERT MODE	CH 1
A TRIGGER LEVEL	Fully clockwise
B TRIGGER LEVEL	0
COUPLING (both)	DC
SOURCE (both)	NORM

http://manoman.sqhill.com

b. Use vertical POSITION controls as needed.

CHECK—Stable triggering when display is positioned within 0.5 div of graticule center, and SLOPE is set to + and −, for the following modes:

B TRIGGER SOURCE	VERT MODE	POSITION CONTROL
NORM	CH 1	Moves display away from triggering point.
CH 1	CH 1	Does not affect triggering.
CH 2	CH 2	Does not affect triggering.

c. Set: B TRIGGER SOURCE switch to NORM and use CH 2 POSITION control as needed.

CHECK—Stable triggering when the display is positioned within 1 div of graticule center and SLOPE is set to + and −.

7. Check B Internal 25 MHz Triggering

a. Set:

VERT MODE	CH 1
TRIGGER COUPLING (both)	AC
CH 1 VOLTS/DIV	10 mV
CH 2 VOLTS/DIV	.1 V
A TIME/DIV	.2 μs
B TIME/DIV	.5 μs

b. Set leveled sine-wave generator for 3 div (30 mV), 25 MHz display.

c. Set CH 1 VOLTS/DIV switch to .1 V.

d. Use B TRIGGER LEVEL control as needed.

CHECK—Stable display, with both + and − slopes for these modes:

B TRIGGER

SOURCE	COUPLING
CH 2	AC, DC
CH 1	DC, AC
NORM	AC, DC

e. Set:

CH 1 VOLTS/DIV	10 mV
B TRIGGER COUPLING	LF REJ

f. Set leveled sine-wave generator for 5 div (50 mV) 25 MHz display.

g. Set CH 1 VOLTS/DIV switch to .1 V (0.5 div).

h. Use B TRIGGER LEVEL as needed.

CHECK—Stable display, for both + and − slopes with B TRIGGER SOURCE set to NORM, CH 1 and CH 2.

i. Set B TRIGGER COUPLING switch to HF REJ.

CHECK—No stable display with B TRIGGER SOURCE set to CH 2, CH 1, and NORM.

8. Check A Internal 25 MHz Triggering

a. Set:

HORIZ DISPLAY	A
A TIME/DIV	.05
A TRIG LEVEL	0
CH 1 VOLTS/DIV	10 mV

b. Set leveled sine-wave generator for 3 div (30 mV) 25 MHz display.

c. Set CH 1 VOLTS/DIV switch to .1 V.

d. Use A TRIGGER LEVEL control as needed.

CHECK—Stable display, with both + and − slopes for these modes:

A TRIGGER

SOURCE	COUPLING
NORM	AC, DC
CH 1	DC, AC
CH 2	AC, DC

e. Set:

CH 1 VOLTS/DIV	10 mV
A TRIGGER COUPLING	LF REJ

http://manoman.sqhill.com

f. Set leveled sine-wave generator for 5 div (50 mV) 25 MHz display.

g. Set CH 1 VOLTS/DIV switch to .1 V.

h. Use A TRIGGER LEVEL as needed.

CHECK—Stable display, for both + and − slopes with A TRIGGER SOURCE set to CH 2, CH 1, and NORM.

i. Set A TRIGGER COUPLING switch to HF REJ.

CHECK—No stable display with A TRIGGER SOURCE set to NORM, CH 1, and CH 2.

9. Check A External 25 MHz Triggering

a. Set:

VOLTS/DIV (both)	10 mV
TRIGGER COUPLING (both)	AC
SOURCE (both)	EXT
A TRIGGER LEVEL	As needed

b. Set leveled sine-wave generator to maintain 5 div (50 mV) display throughout Steps 9 and 10.

CHECK—Stable display, for both + and − slopes with A TRIGGER COUPLING set to AC and DC.

c. Set:

CH 1 VOLTS/DIV	20 mV
A TRIGGER COUPLING	LF REJ

d. Set leveled sine-wave generator for 5 div (100 mV) 25 MHz display.

e. Use A TRIGGER LEVEL control as needed.

CHECK—Stable display, with + and − slopes.

f. Set A TRIGGER COUPLING switch to HF REJ.

CHECK—No stable display.

g. Remove 10X attenuator from external trigger setup and change A TRIGGER SOURCE switch to EXT ÷ 10.

CHECK—No stable display.

h. Set A TRIGGER COUPLING switch to LF REJ.

CHECK—Stable display, with both + and − slopes.

i. Set:

CH 1 VOLTS/DIV	10 mV
A TRIGGER COUPLING	AC

j. Set leveled sine-wave generator for 5 div, (50 mV) 25 MHz display (0.5 V at external trigger input).

CHECK—Stable display, for both + and − slopes with A TRIGGER COUPLING set to AC and DC.

10. Check B External 25 MHz Triggering

a. Set:

HORIZ DISPLAY	B DLY'D
A TIME/DIV	.2 μs
B TIME/DIV	.05 μs

b. Add 10X attenuator to the external trigger setup.

CHECK—Stable display, for both + and − slopes with B TRIGGER COUPLING set to AC and DC.

c. Set CH 1 VOLTS/DIV switch to 20 mV.

d. Adjust leveled sine-wave generator for 5 div (100 mV) 25 MHz display.

e. Set B TRIGGER COUPLING switch to LF REJ and use B TRIGGER LEVEL control as needed.

CHECK—Stable display, with both + and − slopes.

f. Set B TRIGGER COUPLING switch to HF REJ.

CHECK—No stable display.

http://manoman.sqhill.com

11. Check B and A External 100 MHz Triggering

a. Set:

TRIGGER COUPLING (both)	AC
CH 1 VOLTS/DIV	50 mV
B TRIGGER LEVEL	As needed

b. Connect 25 MHz signal from leveled sine-wave generator to B External Trigger input via 50 Ω BNC cable, GR-to-BNC female adapter, CT-3 through output, GR-to-BNC male adapter, 10X attenuator and 50 Ω termination (remove dual input connector).

c. Connect CT-3 Sig Out 10% signal to CH 1 input via 50 Ω BNC cable and 50 Ω termination (remove dual input connector).

d. Set leveled sine-wave generator for 3 div (150 mV) 25 MHz display, then change frequency to 100 MHz. Do not readjust signal amplitude.

e. Push in X10 MAG (IN) button and use B TRIGGER LEVEL control as needed.

CHECK—Stable display, with 0.1 div or less jitter, for + and − slopes with B TRIGGER COUPLING set to AC and DC.

f. Set leveled sine-wave generator for 6 div (300 mV), 25 MHz display, then change frequency to 100 MHz. Do not readjust signal amplitude.

g. Set B TRIGGER COUPLING switch to LF REJ and use B TRIGGER LEVEL control as needed.

CHECK—Stable display, with 0.1 div or less jitter, with both + and − slopes.

h. Set B TRIGGER COUPLING switch to HF REJ.

CHECK—No stable display.

i. Set:

HORIZ DISPLAY	A
A TIME/DIV	.05 μs
A TRIGGER MODE	LF REJ
A TRIGGER SOURCE	EXT

j. Move leveled sine-wave generator signal from B External input to A External Trigger input.

k. Use A TRIGGER LEVEL control as needed.

CHECK—Stable display, with 0.1 div or less jitter, with both + and − slopes.

l. Set A TRIGGER COUPLING to HF REJ.

CHECK—No stable display.

m. Set A TRIGGER COUPLING switch to AC.

n. Set leveled sine-wave generator for 3 div (150 mV) 25 MHz display, then change frequency to 100 MHz. Do not readjust signal amplitude.

o. Use A TRIGGER LEVEL control as needed.

CHECK—Stable display, with 0.1 div or less jitter, for both + and − slopes with A TRIGGER COUPLING set to AC and DC.

p. Remove 10X attenuator from External trigger setup and change A TRIGGER SOURCE switch to EXT ÷ 10.

q. Use A TRIGGER LEVEL control as needed.

CHECK—Stable display, with 0.1 div or less jitter, for both + and − slopes with A TRIGGER COUPLING set to DC and AC.

r. Set leveled sine-wave generator for 6 div (300 mV) 25 MHz display, then change frequency to 100 MHz. Do not readjust signal amplitude.

s. Set A TRIGGER COUPLING to LF REJ and use A TRIGGER LEVEL as needed.

CHECK—Stable display, with 0.1 div or less jitter, with both + and − slopes.

t. Set A TRIGGER COUPLING to HF REJ.

http://manoman.sqhill.com

CHECK—No stable display.

u. Disconnect the test setup.

12. Check A Internal 100 MHz Triggering

a. Set:

VOLTS/DIV (both)	50 mV
TRIGGER SOURCE (both)	NORM
TRIGGER COUPLING (both)	AC

b. Connect leveled sine-wave generator signal to CH 1 and CH 2 inputs via 50 Ω BNC cable, 50 Ω termination and dual-input coupler. Adjust leveled sine-wave generator for 1.5 div 100 MHz display.

CHECK—Stable display, with 0.1 div or less jitter, for + and − slope, for these modes (adjust A TRIGGER LEVEL as needed):

A TRIGGER

SOURCE	COUPLING
NORM	AC, LF REJ, DC
CH 1	DC, LF REJ, AC
CH 2	AC, LF REJ, DC

c. Set A TRIGGER COUPLING switch to HF REJ.

CHECK—No stable display.

13. Check B Internal 100 MHz Triggering

a. Set:

HORIZ DISPLAY	B DLY'D
A TIME/DIV	.2 μs
B TIME/DIV	.05 μs

CHECK—Stable display, with 0.1 div or less jitter, for + and − slope, for these modes (adjust B TRIGGER LEVEL as needed):

B TRIGGER

SOURCE	COUPLING
NORM	AC, LF REJ, DC
CH 1	DC, LF REJ, AC
CH 2	AC, LF REJ, DC

c. Set B TRIGGER COUPLING switch to HF REJ.

CHECK—No stable display.

14. Check A and B HF REJ (High Frequency Reject) Triggering

a. Set:

HORIZ DISPLAY	A
TIME/DIV (both)	10 μs
X10 MAG	Off (button out)
TRIGGER COUPLING (both)	HF REJ
CH 1 VOLTS/DIV	.1 V
CH 2 VOLTS/DIV	10 mV
VERT MODE	CH 2
TRIGGER SOURCE (both)	CH 2
POSITION (horizontal)	As needed

b. Set leveled sine-wave generator to 50 kHz.

c. Set generator for 5 div (50 mV) display in CH 2.

d. Set CH 2 VOLTS/DIV switch to .1 V. Adjust A TRIGGER LEVEL for stable display, with both + and − slopes.

e. Set generator frequency for 1 MHz signal and push in X10 MAG (IN) button.

CHECK—No stable display with A TRIGGER SOURCE switch in CH 2, CH 1, and NORM.

f. Set:

A TRIGGER LEVEL	Fully clockwise
HORIZ DISPLAY	B DLY'D

CHECK—No stable display with B TRIGGER SOURCE switch in CH 1, CH 2, and NORM.

15. Check Single Sweep

a. Set:

A TRIGGER COUPLING	AC
SOURCE (A)	NORM
LEVEL (A)	0
HORIZ DISPLAY	A
VERT MODE	CH 1
X10 MAG (IN)	Off (button out)

b. Set leveled sine-wave generator for 2 div 50 kHz display. Use horizontal POSITION to move start of sweep within viewing area. Adjust the A TRIGGER LEVEL control to move the start of the sweep vertically about 0.5 div from its position when the A TRIGGER LEVEL was set to 0 (see Fig. 5-3).

http://manoman.sqhill.com

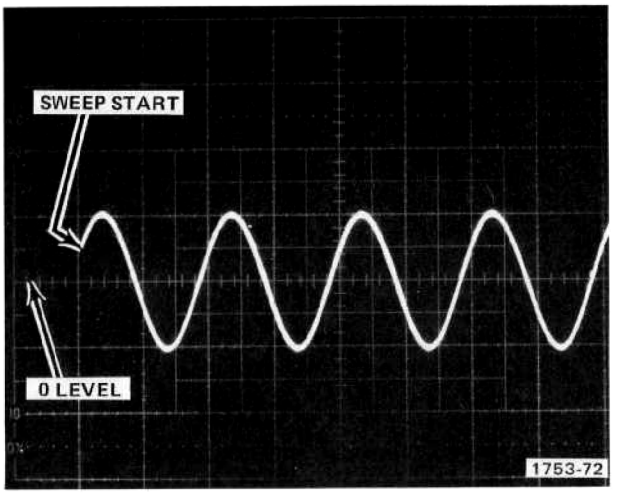

Fig. 5-3. TRIGGER LEVEL adjusted so sweep starts 0.5 div away from 0 level (graticule center) setting.

c. Set:

TIME/DIV	10 ms
CH 1 AC-GND-DC	GND
TRIG MODE	SINGL SWP (push in)

CHECK—READY LED illuminates.

d. Set CH 1 AC-GND-DC switch to DC.

CHECK—A single sweep occurs and READY LED goes out.

e. Press SINGL SWP button.

CHECK—A single sweep occurs each time SINGL SWP button is pressed.

f. Remove the test setup.

16. Check 30 Hz Internal Triggering

a. Set:

TIME/DIV (both)	5 ms
A TRIGGER MODE	NORM
CH 1 VOLTS/DIV	10 mV

b. Connect 30 Hz low-frequency generator signal to CH 1 input via 50 Ω cable, BNC T and 50 Ω termination.

From BNC T, connect 50 Ω cable and 50 Ω termination to B EXT input.

c. Set low-frequency generator for 3 div (30 mV) vertically centered display.

d. Set CH 1 VOLTS/DIV switch to .1 V.

CHECK—Stable display, for both + and − slopes with A TRIGGER COUPLING set to AC and DC. (Set A TRIGGER LEVEL as needed.)

e. Set:

CH 1 VOLTS/DIV	10 mV
A TRIGGER COUPLING	HF REJ

f. Set low-frequency generator for 5 div (50 mV) 30 Hz display.

g. Set CH 1 VOLTS/DIV switch to .1 V (0.5 div) and use A TRIGGER LEVEL as needed.

CHECK—Stable display, with both + and − slopes.

h. Set A TRIGGER COUPLING switch to LF REJ.

CHECK—No stable display.

i. Set:

A TRIG MODE	AUTO
LEVEL (A)	Fully clockwise
A TIME/DIV	10 ms
B TIME/DIV	5 ms
B TRIGGER SOURCE	NORM
B TRIGGER COUPLING	HF REJ
HORIZ DISPLAY	B DLY'D
CH 1 VOLTS/DIV	.1 V
LEVEL (B)	As needed

CHECK—Stable display, with both + and − slopes.

j. Set B TRIGGER COUPLING switch to LF REJ.

CHECK—No stable display.

http://manoman.sqhill.com

k. Set:

CH 1 VOLTS/DIV	10 mV
B TRIG COUPLING	AC

l. Set low-frequency generator for 3 div (30 mV) 30 Hz display.

m. Set CH 1 VOLTS/DIV switch to .1 V and use B TRIGGER LEVEL control as needed.

CHECK—Stable display, for both + and − slopes with B TRIGGER COUPLING set to AC and DC.

17. Check 30 Hz External Triggering

a. Set:

B TRIGGER COUPLING	AC
CH 1 VOLTS/DIV	10 mV

b. Set low-frequency generator for 5 div (50 mV) display.

c. Set B TRIGGER SOURCE switch to EXT.

CHECK—Stable display, for both + and − slopes with B TRIGGER COUPLING set to AC, HF REJ and DC.

d. Set B TRIGGER COUPLING switch to LF REJ.

CHECK—No stable display.

e. Move test setup from B EXT Input to A EXT Input.

f. Set:

HORIZ DISPLAY	A
A TRIGGER COUPLING	AC
A TRIG MODE	NORM
SOURCE (A)	EXT
TRIGGER LEVEL (A)	As needed

CHECK—Stable display, for both + and − slopes with A TRIGGER COUPLING set to AC, HF REJ and DC.

g. Set A TRIGGER COUPLING switch to LF REJ.

CHECK—No stable display.

h. Disconnect the test setup.

18. Check Line Triggers

a. Set:

A TIME/DIV	5 ms
A TRIG MODE	AUTO
A TRIG COUPLING	AC
A TRIGGER SOURCE	LINE
SLOPE (A)	+
CH 1 VOLTS/DIV	As required

b. Connect 10X probe from CH 1 input to a line-frequency source.

CHECK—Stable display, starting on positive-going slope.

c. Set A TRIGGER SLOPE switch to −.

CHECK—Stable display, starting on negative-going slope.

d. Disconnect probe from line-frequency source, then from oscilloscope.

19. Check Trigger Level Range

a. Set:

TRIG COUPLING (both)	AC
TRIG SOURCE (both)	EXT
TRIGGER SLOPE (both)	+
VERT MODE	CH 1
CH 1 VOLTS/DIV	1 V
HORIZ DISPLAY	B DLY'D
TIME/DIV (both)	1 ms

b. Connect 1 kHz signal from low-frequency generator to CH 1 input and B External Trigger input via 50 Ω cable, BNC T (to B External input) and 50 Ω cable.

c. Adjust the generator for a 4 div display.

CHECK—Display is triggered along positive slope of waveform when B TRIGGER LEVEL control is rotated, but not triggered (trace disappears) at either extreme of rotation.

http://manoman.sqhill.com

d. Set B TRIG SLOPE to −.

CHECK—Display is triggered along negative slope of waveform when B TRIGGER LEVEL is rotated, but not triggered at either extreme of rotation.

e. Move External Trigger signal to A External input.

f. Set HORIZ DISPLAY to A.

CHECK—Display is triggered along positive slope of waveform when A TRIGGER LEVEL control is rotated, but not triggered (free-runs) at either extreme of rotation.

g. Set A TRIG SLOPE to −.

CHECK—Display is triggered along negative slope of waveform when A TRIGGER LEVEL control is rotated, but not triggered at either extreme of rotation.

h. Set:

CH 1 VOLTS/DIV	5 V
A TRIG SOURCE	EXT ÷ 10
A TRIG COUPLING	AC

i. Disconnect low-frequency generator signal and connect 50 V standard amplitude signal from calibration generator via 50 Ω cable.

NOTE

In the remainder of this step, adjust CH 1 VAR VOLTS/DIV as needed to get top and bottom of display on screen.

CHECK—Display is triggered along negative slope of waveform when A TRIG LEVEL control is rotated. (NOTE—The applied signal is 50 V peak-to-peak. The range of the A LEVEL control is only ±20 V, or 40 V peak-to-peak, or greater; therefore, untriggered operation at either extreme of rotation is not required.)

j. Set A TRIG SLOPE to +.

CHECK—Display is triggered along positive slope of waveform when A TRIG LEVEL control is rotated (the note for Step i applies to Step j).

k. Disconnect calibration generator signal.

20. Check A Normal Mode

a. Set:

A TIME/DIV	1 ms
A TRIG SOURCE	NORM
A TRIG COUPLING	DC
A TRIG MODE	AUTO
CH 1 VOLTS/DIV	.5 V
CH 1 VAR VOLTS/DIV	Calibrated detent
LEVEL (A)	As needed

b. Connect .1 s time marks from time-mark generator to CH 1 input via 50 Ω cable and 50 Ω termination.

CHECK—Display is triggered.

c. Set A TRIG MODE switch to NORM.

CHECK—Display is triggered.

d. Set CH 1 AC-GND-DC switch to GND.

CHECK—Display is not triggered.

21. Check Automatic Recovery Time

a. Set:

CH 1 AC-GND-DC	DC
A TRIG MODE	AUTO

CHECK—Display is triggered.

b. Set time-mark generator for .5 s time marks.

CHECK—Display is not triggered.

c. Disconnect time-mark generator.

http://manoman.sqhill.com

22. Check/Adjust Trigger View Centering and Gain (R675, R679)

a. Set:

A TRIGGER SOURCE	EXT
A TRIGGER COUPLING	AC
A TRIGGER LEVEL	0
A TRIGGER SLOPE	+
A TIME/DIV	0.2 ms
VERT MODE	TRIG VIEW

b. Connect the calibration generator standard-amplitude signal to the A External Trigger input connector via a 50 Ω coaxial cable. Set the generator for 0.5 V output.

c. CHECK—Display amplitude is 5 div ±5% (5 div ±0.25 div) and that display will trigger symmetrically within one div of the center horizontal graticule line when the A TRIGGER SLOPE is switched between + and −.

d. ADJUST—Trig View Centering (R675) to center the display about the center horizontal graticule line.

e. ADJUST—Trig View Gain (R679) for a 5 div display.

f. INTERACTION—Between Trig View Centering and Trig View Gain adjustment. Repeat both for no visible interaction.

g. Disconnect the calibration generator standard-amplitude signal from the A External Trigger input.

23. Check/Adjust Trigger View Low-Frequency Compensation (C606, C603)

a. Connect the calibration generator high-amplitude output to the A External Trigger input connector via a 50 Ω coaxial cable. (Check generator output to see if termination is required.)

b. Set calibration generator for a 5 div display at 1 kHz.

c. CHECK—Square-wave has less than 10% overshoot or rounding (±0.5 div).

d. ADJUST—C606 for best flat top on square-wave display.

e. Change A TRIGGER SOURCE to EXT ÷ 10 and adjust calibration generator output amplitude for a 5 div display.

f. CHECK—Square-wave has less than 10% overshoot or rounding (±0.5 div).

g. ADJUST—C603 for best flat top on square-wave display.

h. Remove BNC cable from high-amplitude output on the calibration generator.

24. Check/Adjust Trigger View High-Frequency Compensation (C673, R673, and R676)

a. Set:

A TIME/DIV	0.2 μs
A TRIGGER SOURCE	EXT

b. Connect fast-rise + output from calibration generator to the A External Trigger input connector via a 50 Ω coaxial cable and a 50 Ω termination. Set the calibration generator to 100 kHz and adjust output amplitude for a 5 div display.

c. CHECK—Square-wave front corner has less than ±10% aberration (±0.5 div).

d. ADJUST—C673, R673, and R676 for best front corner and square-wave rise time of 5 ns or less.

e. Disconnect calibration generator.

http://manoman.sqhill.com

E. DM-SERIES DIGITAL MULTIMETERS

FOR OSCILLOSCOPES WITH DIGITAL MULTIMETERS ATTACHED, REFER TO THE CALIBRATION SECTION OF THE DIGITAL MULTIMETER MANUAL AT THIS POINT.

FOR CALIBRATION OF OSCILLOSCOPES WITHOUT DIGITAL MULTIMETERS, CONTINUE TO PART F.

http://manoman.sqhill.com

F. HORIZONTAL

Equipment Required

1. Test oscilloscope
2. Time-mark generator
3. 50 Ω BNC cable (2 required)
4. 50 Ω BNC termination
5. Screwdriver
6. Low-capacitance screwdriver
7. Light shield—for Delay-Time Jitter only (step 15)

See ADJUSTMENT LOCATIONS 1 and ADJUSTMENT LOCATIONS 3 pull-out pages for adjustments and test points (TP).

466 Control Settings (*Indicates changes from previous step)

POWER	ON

Display

REDUCED SCAN (PULL)	Off (push INTEN in)
INTEN	As desired
FOCUS	As desired
SCALE ILLUM	As desired
ASTIG	Best defined trace

Vertical (CH 1 and CH 2)

VERT MODE	CH 1
POSITION	Midrange
*VOLTS/DIV	*.5 V
*VAR VOLTS/DIV	*Calibrated detent
AC-GND-DC	DC
INVERT	Normal (button out)
20 MHz BW LIMIT	Full bandwidth (button out)

Storage

NON STORE	On (button in)
STORAGE LEVEL	NORM
SAVE INTEN	Midrange
SAVE	Off (button out)
VIEW TIME	NORM

Trigger (A and B)

*COUPLING	*AC
LEVEL	As needed for triggered display
SLOPE	+
A TRIGGER SOURCE	NORM
*B (DLY'D) TRIGGER SOURCE	*STARTS AFTER DELAY
TRIG MODE	AUTO
A TRIG HOLDOFF	NORM

Sweep (A and B)

*HORIZ DISPLAY	*A INTEN
*A TIME/DIV	*1 ms
*B TIME/DIV	*5 μs
VAR TIME/DIV	Calibrated detent
*DELAY TIME POSITION (DTP)	*1.00
X10 MAG	Off (button out)
POSITION (horizontal)	As needed
FINE	As needed

Timing Checks and Adjustments

A INTEN Mode. The A INTEN mode verifies which time mark (or other timing signal) will be seen in B DLY'D mode. Adjust intensity and focus to permit observation of the intensified portion of the display. See Fig. 5-4.

B DLY'D Mode. The B DLY'D mode establishes the most accurate point for making checks and adjustments. Position the time mark (or other timing signal) so it begins at the left-hand edge (sweep start) of the trace—do this with the DTP control when checking and when doing the calibration adjustment during calibration. Optimum intensity and focus settings for this mode are different from A INTEN mode. See Fig. 5-5.

Timing is checked and adjusted after a stable display is obtained and is referenced along the center horizontal graticule line.

Lowest usable intensity settings reduce the error contributed by trace thickness.

When a CHECK is indicated, use the A INTEN mode to identify the correct signal. Switch to B DLY'D and set the

http://manoman.sqhill.com

signal start at the left-hand edge (sweep start) using the DELAY TIME POSITION (DTP) control, then make the measurement.

When an ADJUST is indicated, set the DELAY TIME POSITION (DTP) control to the required setting (for example—1.00 in Step 1 parts a and b), then make the adjustment (in the same example—Sweep Start, R1115) to have the signal start at the sweep start.

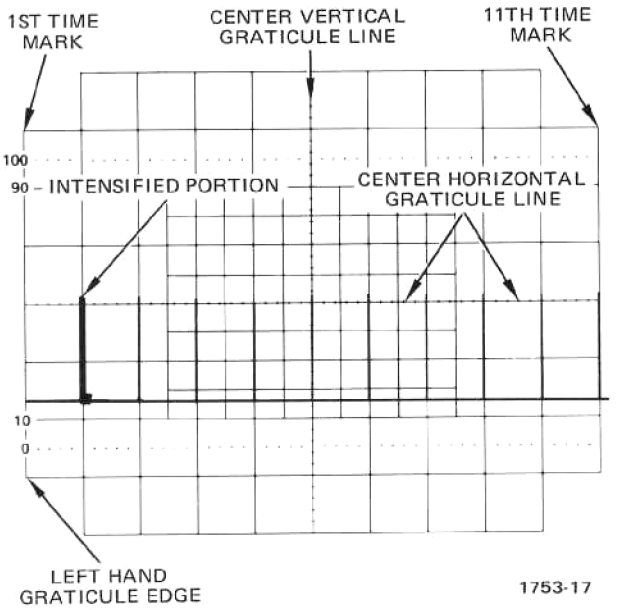

Fig. 5-4. A INTEN mode.

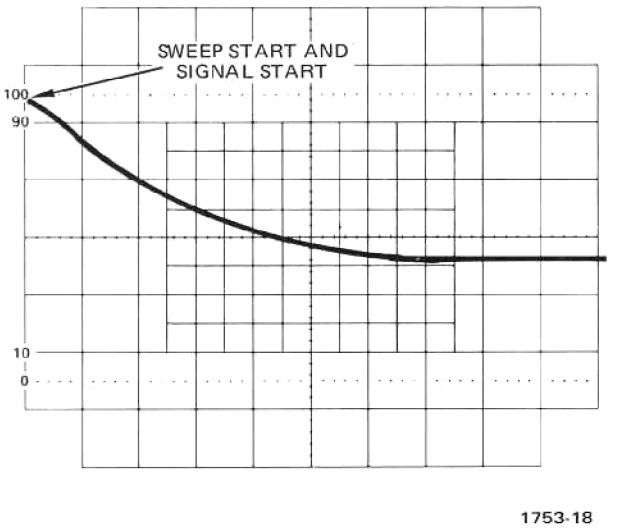

Fig. 5-5. B DLY'D mode.

Fast-Rise, Low Repetition-Rate Signals. It may be difficult—because of high light levels, etc., to observe the starting point of some signals. Use the sweep starting point just before the signal start.

In Step 1 parts a and b, for example, if the signal start was set to start 0.5 minor division after the sweep start, the baseline beginning would appear as a small dot. See Fig. 5-6.

The error in this method is small, as long as B Sweep is 100 or more times faster than A Sweep. For example, with A TIME/DIV switch set to 1 ms and B TIME/DIV to 5 μs, the B DLY'D mode resolution is 5% per major graticule division. The use of the 0.5 minor division spot is 1/10 of that, or 0.05%.

1. Check/Adjust Sweep Start and A Sweep Timing

a. Connect 1 ms time marks from time-mark generator to CH 1 input via 50 Ω cable and 50 Ω termination.

b. Note 2nd time mark is intensified. Change HORIZ DISPLAY to B DLY'D and set signal start to sweep start with DTP.

CHECK—DTP control reads 1.00.

c. Set HORIZ DISPLAY to A INTEN, use DTP to move intensified portion to 10th time mark.

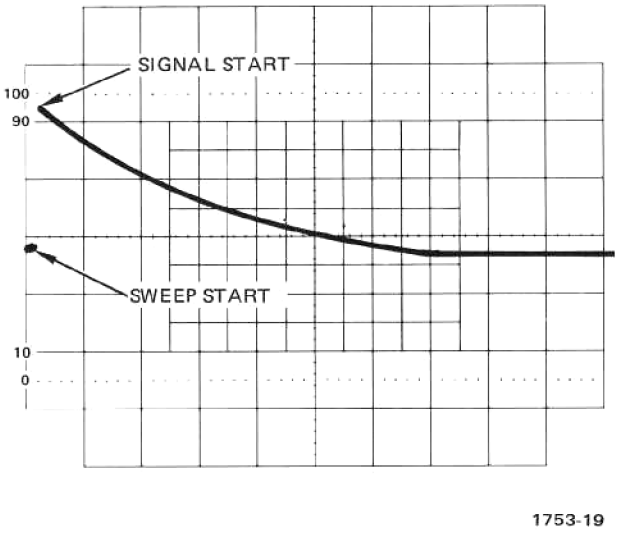

Fig. 5-6. Fast-rise, low-repetition-rate signals.

http://manoman.sqhill.com

d. Change HORIZ DISPLAY to B DLY'D and set signal start to sweep start with DTP.

CHECK—DTP control reads 9.00

ADJUST—A Swp Cal (R1145) for signal start at sweep start.

e. Set DTP control to 1.00.

CHECK—Signal starts at sweep start.

ADJUST—Swp Start (R1115) for signal start at sweep start.

INTERACTION—A Swp Cal (R1145) and Swp Start (R1115) adjustments. Adjust both alternately until 2nd mark starts exactly at 1.00 and 10th mark starts exactly at 9.00.

2. Check Differential Time Accuracy

a. Use DTP to set second time mark start to sweep start and note DTP reading (1.00 within 1 minor div, 0.99 to 1.01).

CHECK—Each successive time mark (see Table 5-11).

Table 5-11
DIFFERENTIAL TIME ACCURACY

Time Mark	DTP Setting	
	+15°C to +35°C	−15°C to +55°C
3	1.98 to 2.02	1.95 to 2.05
4	2.97 to 3.03	2.92 to 3.08
5	3.96 to 4.04	3.90 to 4.10
6	4.95 to 5.05	4.87 to 5.13
7	5.94 to 6.06	5.85 to 6.15
8	6.93 to 7.07	6.82 to 7.18
9	7.92 to 8.08	7.80 to 8.20
10	8.91 to 9.09	8.77 to 9.23
11	9.90 to 10.10	9.75 to 10.25

3. Check/Adjust Horizontal Gain and Sweep Linearity

a. Set HORIZ DISPLAY switch to A and horizontally position display to have 1st time mark under left-hand graticule edge.

CHECK—1 time mark/div, within 2% (±0.2 div for 11th mark, +20°C to +30°C), or within 3% (±0.3 div for 11th mark, −15°C to +55°C).

ADJUST—X1 Gain (R1257) for exactly 1 time mark/div over full 10 div.

b. Set time-mark generator for 0.1 ms time marks.

c. Push in X10 MAG (IN) button.

CHECK—X10 MAG indicator is on when X10 MAG (IN) button is in.

CHECK—1 time mark/div, within 3% (±0.3 div for 11th mark, +20°C to +30°C), or within 4% (±0.4 div for 11th mark, −15°C to +55°C).

ADJUST—X10 Gain (R1253) for exactly 1 time mark/div over full 10 div.

CHECK—Sweep accuracy over any 2 div portion of 10 div sweep is within 0.1 div (5%).

d. Release X10 MAG (IN) button.

e. Set time-mark generator for 1 ms time marks.

CHECK—Linearity over any 2 div portion of sweep is within 5% of accurate timing (±0.1 div).

4. Check/Adjust Magnifier Registration

a. Push in X10 MAG (IN) button.

b. Set time-mark generator for 5 ms time marks and position middle time mark to start at center vertical graticule line.

c. Release X10 MAG (IN) button.

http://manoman.sqhill.com

CHECK—Middle time mark starts at center line, within 0.2 div.

ADJUST—Mag Reg (R1255) so middle time mark starts at center line. Repeat parts a through c until there is no display shift between magnifier on and off.

5. Check/Adjust B Sweep Timing

a. Set time-mark generator for 1 ms time marks.

b. Set:

DELAY TIME POSITION	Fully CCW
B TRIGGER SOURCE	Normal
B TIME/DIV	1 ms
HORIZ DISPLAY	B DLY'D

CHECK—1 time mark/div, within 2% (±0.2 div for 11th mark, +20°C to +30°C), or within 3% (±0.3 div for 11th mark, −15°C to +55°C).

ADJUST—B Swp Cal (R1175) for exactly 1 time mark/div over full 10 div.

6. Check A Sweep Length

a. Set HORIZ DISPLAY switch to A.

b. Set time-mark generator for 5 ms time marks and position 3rd time mark to center vertical graticule line.

CHECK—Sweep continues past center, 0.5 to 1.5 div (10.5 to 11.5 total sweep length).

7. Check Var Time/Div Range

a. Set:

A TIME/DIV	2 ms
VAR TIME/DIV	Fully counterclockwise
POSITION (horizontal)	As needed

CHECK—UNCAL LED lights when VAR TIME/DIV control is out of detent.

CHECK—1 time mark/div or more.

b. Set VAR TIME/DIV control to detent (calibrated).

8. Check Horizontal Position Range

a. Set FINE and POSITION controls fully clockwise.

CHECK—Sweep starts to right of center vertical graticule line.

b. Set FINE and POSITION controls fully counterclockwise.

CHECK—Sweep ends to left of center vertical graticule line.

9. Check/Adjust A Sweep High Speed Timing

a. Set time-mark generator for 5.0 μs time marks.

b. Set:

DELAY TIME POSITION	1.00
B TRIGGER SOURCE	STARTS AFTER DELAY
A TIME/DIV	5 μs
B TIME/DIV	.2 μs
HORIZ DISPLAY	A
POSITION (horizontal)	As needed
FINE	As needed

CHECK—1 time-mark/div, within 2% (±0.2 div for 11th mark, +20°C to +30°C), or within 3% (±0.3 div for 11th mark, −15°C to +55°C).

c. Set time-mark generator for 2.0 μs time marks.

d. Set A TIME/DIV switch to 2 μs.

CHECK—1 time mark/div, within 2% (±0.2 div for 11th time mark, +20°C to +30°C) or within 3% (±0.3 div for 11th time mark, −15°C to +55°C).

e. If parts b and d requirements are met, proceed to part m.

f. Adjust C1136 for 1 time mark/div.

g. Set HORIZ DISPLAY switch to B DLY'D (A TIME/DIV, 2 μs; B TIME/DIV, 0.2 μs) and horizontally position the displayed time mark to cross center vertical graticule line. See Point A, Fig. 5-7.

http://manoman.sqhill.com

h. Set DTP control to 9.00.

ADJUST—C1136 to position the displayed time mark to cross center line.

INTERACTION—C1136 and the 1.00 and 9.00 DTP settings. Set DTP control to 1.00 and repeat parts g and h until there is no visible interaction.

i. Set:

A TIME/DIV	5 μs
DELAY TIME POSITION	1.00
HORIZ DISPLAY	A
B TIME/DIV	1 μs

j. Set time-mark generator for 5 μs time marks and note 1 time mark/div (set horizontal POSITION as needed).

k. Set HORIZ DISPLAY switch to B DLY'D and horizontally position the displayed time mark to cross center vertical graticule line. See Point A, Fig. 5-8.

l. Set DTP control to 9.00. Note that there is a time mark crossing center vertical line between an 8.94 to 9.06 DTP control setting. If not, repeat parts f through k adjusting C1136 to get both the 2 μs range and 5 μs range within a DTP reading of 8.94 to 9.06.

m. Set time-mark generator for 0.5 μs time marks.

n. Set:

DELAY TIME POSITION	1.50
B TRIGGER SOURCE	STARTS AFTER DELAY
A TIME/DIV	.5 μs
B TIME/DIV	.05 μs
HORIZ DISPLAY	A

CHECK—1 time mark/div, within 2% (±0.2 div for 11th mark, +20°C to +30°C), or within 3% (±0.3 div for 11th mark, −15°C to +55°C).

o. Set time-mark generator for 0.2 μs time marks.

p. Set A TIME/DIV switch to .2 μs.

CHECK—1 time mark/div, within 2% (±0.2 div for 11th mark, +20°C to +30°C), or within 3% (±0.3 div for 11th mark, −15°C to +55°C).

q. If parts n and p requirements are met, proceed to Step 10.

r. Set time-mark generator for 0.5 μs time marks.

s. Set A TIME/DIV switch to .5 μs and adjust C1137 for 1 time mark/div, using low-capacitance screwdriver.

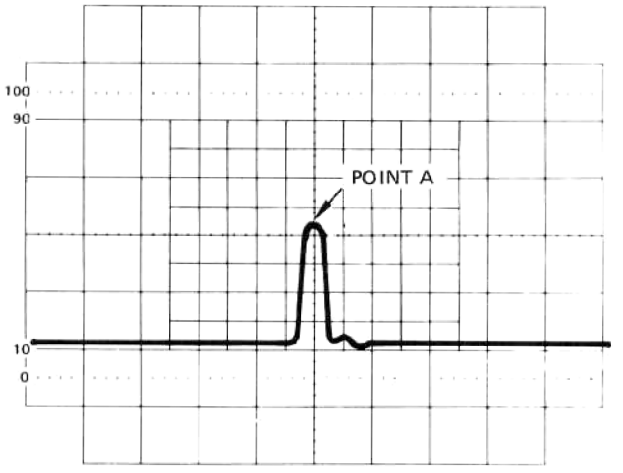

1753-20

Fig. 5-7. 0.2 μs/div timing.

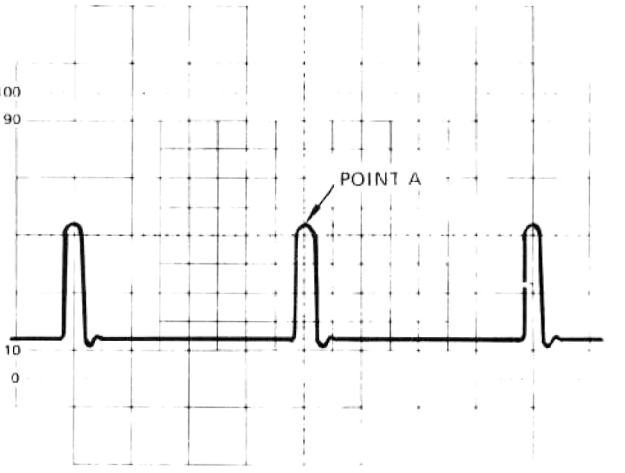

1753-21

Fig. 5.8. 0.5 μs/div timing.

http://manoman.sqhill.com

t. Set HORIZ DISPLAY switch to B DLY'D and horizontally position the displayed time mark to cross center vertical graticule line. See Point A, Fig. 5-7.

u. Set DTP control to 8.50.

ADJUST—C1137 to position the displayed time mark to cross center line.

INTERACTION—C1137 and the 1.50 and 8.50 DTP settings. Set DTP control to 1.50 and repeat parts t and u until there is no visible interaction.

v. Set:

A TIME/DIV	.2 μs
DELAY TIME POSITION	1.50
HORIZ DISPLAY	A

w. Set time-mark generator for 0.2 μs time marks and note 1 time mark/div.

x. Set HORIZ display switch to B DLY'D (verify B TIME/DIV is set to 0.5 μs) and horizontally position the 2nd displayed time mark to cross center vertical graticule line. See Point A, Fig. 5-8.

y. Set DTP control to 8.50. Observe a time mark crossing center vertical line between 8.45 to 8.55 DTP control setting. If not, repeat parts r through x, adjusting C1137 to get both the .2 μs range and the .5 μs range within a DTP reading of 8.45 to 8.55.

10. Check/Adjust B Sweep High Speed Timing

a. Set:

DELAY TIME POSITION	Fully counterclockwise
HORIZ DISPLAY	B DLY'D
B TRIGGER SOURCE	NORM
A TIME/DIV	1 μs
B TIME/DIV	.5 μs

b. Set time-mark generator for .05 μs time marks.

CHECK—1 time mark/div, within 2% (±0.2 div for 11th mark, +20°C to +30°C), or within 3% (±0.3 div for 11th mark, −15°C to +55°C).

ADJUST—C1167 for 1 time mark/div.

11. Check B and A Time/Div Accuracy

a. Set:

B TIME/DIV	.05 μs
A TIME/DIV	.5 μs

b. Set time-mark generator for 50 ns time marks.

CHECK—B Time/Div accuracy using control setting given in Table 5-12, over first 10 div of display, 1 time mark/div within 2% (±0.2 div for 11th mark, +20°C to +30°C), or within 3% (±0.3 div for 11th mark, −15°C to +55°C).

Table 5-12
B TIMING ACCURACY

A and B TIME/DIV Switch Setting		Time-Mark Generator Output
A	B	
.5 μs	.05 μs	50 ns
.5 μs	.1 μs	0.1 μs
.5 μs	.2 μs	0.2 μs
1 μs	.5 μs	0.5 μs
2 μs	1 μs	1 μs
5 μs	2 μs	2 μs
10 μs	5 μs	5 μs
20 μs	10 μs	10 μs
50 μs	20 μs	20 μs
.1 ms	50 μs	50 μs
.2 ms	.1 ms	0.1 ms
.5 ms	.2 ms	0.2 ms
1 ms	.5 ms	0.5 ms
2 ms	1 ms	1 ms
5 ms	2 ms	2 ms
10 ms	5 ms	5 ms
20 ms	10 ms	10 ms
50 ms	20 ms	20 ms[a]
50 ms	50 ms	50 ms[a]

[a]Change A TRIG MODE to NORM if needed.

http://manoman.sqhill.com

c. Set:

HORIZ DISPLAY	A
A TIME/DIV	.05 μs
TRIG MODE	AUTO

d. Set time-mark generator for 50 ns time marks.

CHECK—A TIME/DIV accuracy using control settings given in Table 5-13 over first 10 div of display, 1 time mark/div, within 2% (±0.2 div for 11th mark, +20°C to +30°C), or within 3% (±0.3 div for 11th mark, −15°C to +55°C).

Table 5-13
A TIMING ACCURACY

A TIME/DIV Switch Setting	Time-Mark Generator Output
.05 μs	50 ns
.1 μs	0.1 μs
.2 μs	0.2 μs
.5 μs	0.5 μs
1 μs	1 μs
2 μs	2 μs
5 μs	5 μs
10 μs	10 μs
20 μs	20 μs
50 μs	50 μs
.1 ms	0.1 ms
.2 ms	0.2 ms
.5 ms	0.5 ms
1 ms	1 ms
2 ms	2 ms
5 ms	5 ms
10 ms	10 ms
20 ms	20 ms
50 ms	50 ms
.1 s	0.1 s[a]
.2 s	0.2 s[a]
.5 s	0.5 s[a]

[a]Change A TRIG MODE to NORM and reduce intensity as needed.

12. Check/Adjust High Speed Magnified Timing

a. Set time-mark generator for 10 ns time marks.

b. Set:

A TRIG MODE	AUTO
A TIME/DIV	.05 μs
X10 MAG (IN)	On (button in)
INTEN	As needed

CHECK—1 time mark/2 div, within 3% (6th mark aligns with 10th graticule line ±0.3 div, +20°C to +30°C) or within 4% (6th mark aligns with 10th graticule line ±0.4 div, −15°C to +55°C). This applies to the full sweep length, excluding the first and last 10 divisions of magnified sweep length.

To determine the first portion to be excluded, release X10 MAG (IN) button. Position sweep start 1.5 div left of center vertical graticule line. Push in X10 MAG (IN) button—the first 10 div of sweep is magnified to the left and is off screen.

To determine the last portion to be excluded on the 0.5 μs/div range, release X10 MAG (IN) button. Position sweep stop 1.5 div right of center vertical graticule line. Push in X10 MAG (IN) button—the last 50 ns of sweep is magnified to the right and is off screen.

ADJUST—C1262 and C1265 for 1 cycle/2 div, with low-capacitance screwdriver, excluding the first and last 10 div (which are off screen).

13. Check A and B Magnified Accuracy

a. Push in X10 MAG (IN) button.

CHECK—A TIME/DIV accuracy using control settings given in Table 5-14. 1 time mark/div, within 3% (±0.3 div for 11th mark, +20°C to +30°C), or within 4% (±0.4 div for 11th mark, −15°C to +55°C). Exclude portions of the sweep as indicated.

b. Set:

HORIZ DISPLAY	B DLY'D
A TRIG MODE	AUTO

c. Set time-mark generator for 10 ns time marks.

http://manoman.sqhill.com

CHECK—1 time mark/2 div, within 3% (6th mark aligns with 10th graticule line ±0.3 div, +20°C to +30°C) or within 4% (6th mark aligns with 10th graticule line ±0.4 div, −15°C to +55°C). This applies to the full sweep length, excluding the first and last 10 divisions of magnified sweep length.

d. Set DTP fully counterclockwise, A TIME/DIV to .2 μs, and B TIME/DIV to .05 μs.

CHECK—B TIME/DIV accuracy using control settings given in Table 5-14. 1 time mark/div, within 3% (±0.3 div for 11th mark, +20°C to +30°C) or within 4% (±0.4 div for 11th mark, −15°C to +55°C). Exclude portions of the sweep as indicated.

14. Check Delay Time Accuracy

a. Set time-mark generator for 0.1 μs time marks.

b. Set:

X10 MAG (IN)	Off (button out)
B TRIGGER SOURCE	STARTS AFTER DELAY
A TIME/DIV	.2 μs
B TIME/DIV	.05 μs
DELAY TIME POSITION	1.50

c. Horizontally position 1st displayed marker to center vertical graticule line. See Fig. 5-9.

Table 5-14
A AND B MAGNIFIED ACCURACY

A and B TIME/DIV Switch Setting	Time-Mark Generator Output	Portions of Total Magnified Sweep Length to Exclude from Measurement
.05 μs	10 ns	First and last 10 divisions
.1 μs	10 ns	First and last 5 divisions
.2 μs	20 ns	First and last 2 1/2 divisions
.5 μs	50 ns	
1 μs	0.1 μs	
2 μs	0.2 μs	
5 μs	0.5 μs	
10 μs	1 μs	
20 μs	2 μs	
50 μs	5 μs	
.1 ms	10 μs	
.2 ms	20 μs	
.5 ms	50 μs	
1 ms	0.1 ms	
2 ms	0.2 ms	
5 ms	0.5 ms	
10 ms	1 ms	
20 ms	2 ms[a]	
50 ms	5 ms[a]	
A Sweep Only		
.1 s	10 ms[a]	
.2 s	20 ms[a]	
.5 s	50 ms[a]	

[a]Change A TRIG MODE to NORM.

http://manoman.sqhill.com

d. Set DTP control to 8.50, then move DTP control to position 1st displayed marker to center vertical line.

CHECK—DTP reading is 8.50 ±0.05 (8.45 to 8.55, +15°C to +35°C), or 8.50 ±0.12 (8.35 to 8.62, −15°C to +55°C).

e. Set time-mark generator for .5 μs time marks.

f. Set:

DELAY TIME POSITION	1.50
A TIME/DIV	.5 μs

g. Position displayed marker to center vertical line with horizontal POSITION control.

h. Set DTP control to 8.50, then move DTP control to position displayed marker to center vertical line.

CHECK—DTP reading is 8.50 ±0.05 (8.45 to 8.55, +15°C to +35°C), or 8.50 ±0.12 (8.38 to 8.62, −15°C to +55°C).

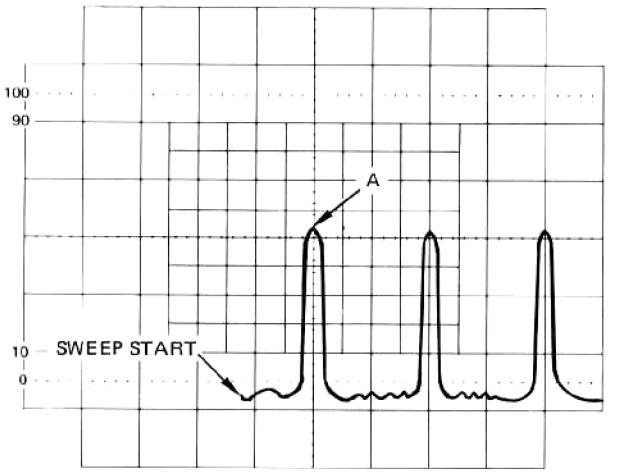

Fig. 5-9. Delay-time accuracy.

CHECK—Delayed sweep accuracy using control settings given in Table 5-15. Use 1.00 for 1st DTP setting and 9.00 for 2nd setting (set DTP to 1.00 and use horizontal POSITION control to align time mark to center graticule reference line, then set DTP to 9.00 and move DTP so nearest time mark aligns with center graticule reference line—read amount of error from DTP dial). If 1st time mark is not visible, use 2nd time mark. Final DTP setting should read 9.00 ±0.08 (8.92 to 9.08, +15°C to +35°C) or 9.00 ±0.20 (8.80 to 9.20, −15°C to +55°C).

15. Check Delay Time Jitter

a. Set time-mark generator for 1 ms time marks.

b. Set:

DELAY TIME POSITION	1.00
A TRIG MODE	AUTO
A TIME/DIV	1 ms
B TIME/DIV	.2 μs

c. Attach light shield to graticule housing.

CALIBRATION AID—The low repetition rate of this check makes viewing difficult. Additional intensity may be obtained by using storage.

Push in VAR PERS button and adjust INTEN, STORAGE LEVEL and VIEW TIME for a usable trace.

d. Set DTP control to position time mark to graticule center.

CHECK—Jitter is 1 div or less (60 Hz power line) or 2.5 div or less (50 Hz power line).

e. Set DTP control to about 9.00 to position time mark to graticule center.

CHECK—Jitter is 1 div or less (60 Hz power line) or 2.5 div or less (50 Hz power line).

f. Push in NON STORE button and remove light shield.

http://manoman.sqhill.com

Table 5-15
DELAY TIME ACCURACY

Time-Mark Generator Output	A TIME/DIV Switch Setting	B TIME/DIV Setting	DTP Setting
1 μs	1 μs	.1 μs	
2 μs	2 μs	.2 μs	
5 μs	5 μs	.5 μs	
10 μs	10 μs	1 μs	
20 μs	20 μs	2 μs	
50 μs	50 μs	5 μs	8.92 to 9.08 (+15°C to +35°C)
.1 ms	.1 ms	10 μs	
.2 ms	.2 ms	20 μs	
.5 ms	.5 ms	50 μs	or
1 ms	1 ms	.1 ms	
2 ms	2 ms	.2 ms	
5 ms	5 ms	.5 ms	8.80 to 9.20 (−15°C to +55°C)
10 ms	10 ms	1 ms	
20 ms	20 ms	2ms[a]	
50 ms	50 ms	5 ms[a]	
.1 s	.1 s	10 ms[a]	
.2 s	.2 s	20 ms[a]	
.5 s	.5 s	50 ms[a]	

[a]Change A TRIG MODE to NORM.

16. Check Mixed Sweep Accuracy

NOTE

The following portions of MIXED SWEEP mode are excluded: (1) The first 0.5 div after display start, (2) The first 0.2 div or 0.1 μs, whichever is greater, after the transition from A Sweep to B Sweep.

a. Set:

DELAY TIME POSITION	Fully counterclockwise
B TRIGGER SOURCE	NORMAL
LEVEL (B)	Fully counterclockwise (untriggered)
HORIZ DISPLAY	A
A TIME/DIV	1 ms
B TIME/DIV	.5 ms
A TRIGGER LEVEL	As needed for triggered sweep

b. Horizontally position 2nd time mark to left-hand graticule line and note A Sweep timing accuracy over 9 div.

c. Change HORIZ DISPLAY control to MIX and position 2nd time mark to left-hand graticule line.

CHECK—A Sweep accuracy is within 2% of accuracy noted in part b.

d. Set B TRIGGER SOURCE switch to STARTS AFTER DELAY and position 2nd marker to 2nd graticule line (1st mark goes off screen).

CHECK—B Sweep accuracy is within 2% (8 div display ±0.16 div from 2nd to 10th graticule line.

e. Set time-mark generator for 0.2 μs markers.

f. Set:

B TRIGGER SOURCE	NORMAL
HORIZ DISPLAY	A
A TIME/DIV	.2 μs
B TIME/DIV	.1 μs

http://manoman.sqhill.com

g. Horizontally position 2nd time mark to left-hand graticule line and note A Sweep timing accuracy over 9 div (from 1st to 10th graticule lines).

h. Change HORIZ DISPLAY control to MIX and position 2nd time mark to left-hand graticule line.

CHECK—A Sweep error is within 2% of accuracy noted in part g.

i. Set B TRIGGER SOURCE switch to STARTS AFTER DELAY and position 2nd marker to left-hand graticule line (1st mark goes off screen).

CHECK—B Sweep accuracy is within 2% (centered 8 div display ±0.16 div from 2nd to 10th graticule lines).

17. Check B Ends A Operation

a. Set:

HORIZ DISPLAY	A INTEN
A TIME/DIV	1 ms
B TIME/DIV	.1 ms
B TRIG MODE	STARTS AFTER DELAY
A TRIG HOLDOFF	B ENDS A (clockwise detent)
DELAY TIME POSITION	About 2.00
INTEN	A Sweep is visible

b. Rotate DELAY TIME POSITION control through its range.

CHECK—End of A Sweep does not extend beyond B intensified portion at any DTP setting.

18. Check A Trigger Holdoff

a. Set:

HORIZ DISPLAY	A
A TIME/DIV	10 μs
A TRIG HOLDOFF	NORM (fully counter-clockwise)
LEVEL (A)	Fully clockwise

b. Set test oscilloscope:

Vertical mode	Channel 1
Channel 1 Volts/Div	1 V
Horizontal mode	A Sweep
A Trig Slope	–
A Trig Mode	Auto

c. Connect test oscilloscope CH 1 input to A +GATE Output (on oscilloscope being calibrated) via 50 Ω cable.

d. Adjust test oscilloscope Time/Div, Var Time/Div, and Triggering so negative portion of gate (holdoff time) is 1 div long and position waveform between 1st and 2nd vertical graticule lines.

e. Rotate A TRIG HOLDOFF control clockwise, but not into A ENDS B detent.

CHECK—Holdoff time of A GATE is increased 10 times or more.

f. Set the A TRIG HOLDOFF control to NORM.

g. Disconnect the time-mark generator and test oscilloscope.

http://manoman.sqhill.com

G. REDUCED SCAN AND STORAGE

Equipment Required

1. Leveled Sine-Wave Generator
2. Amplitude Calibrator
3. Time-Mark Generator
4. Test Oscilloscope
5. 10X Probe
6. 42-inch 50 Ω BNC Cable
7. 50 Ω BNC Termination
8. Three-inch screwdriver
9. Low-Capacitance screwdriver

See ADJUSTMENT LOCATIONS 1 pull-out page for adjustments and test points (TP).

466 Control Settings (*Indicates changes from the previous step)

POWER	ON

Display

REDUCED SCAN (PULL)	Push INTEN in
INTEN	As desired
FOCUS	Best focused trace
SCALE ILLUM	As desired
ASTIG	Best defined trace

Vertical (CH 1 and CH 2)

VERT MODE	CH 1
POSITION	Midrange
*VOLTS/DIV	*.1 V
VAR VOLTS/DIV	Calibrated detent
AC-GND-DC	*GND
INVERT	Normal (button out)
20 MHz BW LIMIT	Full bandwidth (button out)

Storage

NON STORE	ON (button in)
STORAGE LEVEL	MAX (fully clockwise)
SAVE INTEN	MAX (fully clockwise)
SAVE	Off (button out)
VIEW TIME	MAX (fully clockwise and in detent)

Trigger (A and B)

COUPLING	AC
LEVEL	As needed for triggered display
SLOPE	+
A TRIGGER SOURCE	NORM
B (DLY'D TRIGGER SOURCE)	STARTS AFTER DELAY
TRIG MODE	AUTO
A TRIG HOLDFF	NORM

Sweep (A and B)

HORIZ DISPLAY	A
*A TIME/DIV	*1 ms
*B TIME/DIV	*1 ms
VAR TIME/DIV	Calibrated detent
DELAY TIME POSITION	Fully counterclockwise
X10 MAG	Off (button out)
POSITION (horizontal)	Midrange
FINE	Midrange

1. Check/Adjust Reduced Scan

NOTE

All measurements and readings in this step are referenced to the small graticule in the crt center screen unless otherwise stated.

a. Pull INTENSITY control for Reduced Scan mode.

CHECK—REDUCED SCAN LED lights when INTENSITY knob is pulled out.

CHECK—Trace is parallel to center horizontal graticule line.

ADJUST—Trace Rot R1554 (Reduced Scan Trace Rotation) for trace parallel to graticule line.

NOTE

If adjustment range is insufficient, remove, reverse, and reinstall P1551. Readjust Full Scan Trace rotation (Front Panel) and then Reduced Scan Trace rotation (R1554).

http://manoman.sqhill.com

b. Connect 0.1 ms time marks from time-mark generator to CH 1 input via 50 Ω cable and 50 Ω termination.

c. Set:

X10 MAG (IN)	On (push in)
CH 1 AC-GND-DC	DC

d. CHECK—1 time mark/div, within 2% (9.8 to 10.2 for 11th mark, +20°C to +30°C), or within 3% (9.7 to 10.3 for 11th mark, −15°C to+55°C).

ADJUST—R1464 for 1 time mark/(small) div.

e. Vertically position display baseline 2 large div below center line (bottom line of reduced graticule) and horizontally position a time mark to center vertical graticule line.

CHECK—Time mark is parallel to center vertical graticule line.

ADJUST—3 kV Y-Axis (R1564) for time mark parallel to graticule line.

NOTE

If range is insufficient, remove, reverse, and reinstall P1561. Adjust Full Scan Y-Axis (R1563—see B. DISPLAY AND Z-AXIS, Step 3, part c) then reduced scan (R1564).

f. Set:

X10 MAG (IN)	Off (button out)
REDUCED SCAN (PULL)	Full Scan (push INTEN in)
CH 1 VOLTS/DIV	.5

Set time-mark generator for 1 ms time marks and adjust INTEN, FOCUS, and ASTIG controls for best focused display.

g. Set:

REDUCED SCAN (PULL)	Reduced Scan (pull INTEN out)
CH 1 VOLTS/DIV	.2

CHECK—Display can be focused by adjusting FOCUS control only.

ADJUST—Reduced Scan Astigmatism (R1573) and FOCUS, for best focused display.

h. Disconnect time-mark generator.

i. Connect 20 mV signal from amplitude calibrator to CH 1 input via 50 Ω cable.

j. Set CH 1 VOLTS/DIV switch to 5 mV.

CHECK—Display is 4 div within 3% (3.88 to 4.12 div).

ADJUST—R1527 for 4 (small) div.

INTERACTION—Reduced Scan Astigmatism (R1573) and R1527. Readjust as needed for optimum results.

k. Disconnect amplitude calibrator.

l. Set:

INTEN	Maximum (fully clockwise)
A TIME/DIV	.05 μs
X10 MAG	On (button in)

m. Connect a 96 MHz signal from the leveled sine-wave generator to CH 1 input via 50 Ω cable and 50 Ω termination.

n. Adjust generator for a 5 large-division display.

o. ADJUST—Intensity Limit (R1406) for maximum usable intensity with minimum defocusing or blooming. Adjust FOCUS control as necessary while adjusting R1406.

p. Disconnect sine-wave generator; set A TIME/DIV to 1 ms, and X10 MAG to off (button out).

2. Pre-Adjust Storage Controls

a. Set:

A TRIG LEVEL	Fully clockwise
INTEN	Minimum (fully counter-clockwise)
Storage Mode	FAST (push in)
REDUCED SCAN (Pull)	Push INTEN in

http://manoman.sqhill.com

NOTE

If Storage board or crt have been changed, or misadjustments have been made (or suspected to have been made), perform the following preadjustments. If the circuit is operating normally, no parts have been replaced and adjustments have not been tampered with, then proceed to Step 3.

b. Preset Front Mesh Prep (R1927), Coarse Fast Mesh Transfer (R1989), and Front Operating Level (R1933), fully counterclockwise.

c. Set test oscilloscope vertical mode to channel 1, and channel 1 volts/div for 2 V/div sensitivity (including 10X probe attenuation).

d. Connect the 10X probe from the test oscilloscope to P1951 pin 7 (Front Mesh) and connect the probe ground lead to the 466 circuit ground. Press the ERASE button and verify that the READY LED illuminates. Adjust R1935 Fast Mesh Hold Level for a reading of approximately −6 V on the test oscilloscope.

e. Connect the test oscilloscope 10X probe to P1951 pin 5, and probe ground to 466 circuit ground.

f. Preadjust Fast Mesh Prep (R1982) for a reading of approximately +5 V on the test oscilloscope.

g. Move the 10X probe to P1951 pin 7.

3. Adjust/Check Var Pers

a. Set:

Storage Mode	VAR PERS (push in)
INTEN	Minimum (fully counter-clockwise)
VIEW TIME	MAX (in detent)

b. Press ERASE button and note intensity of crt screen. Set STORAGE LEVEL to minimum (fully counterclockwise).

c. ADJUST—Front Mesh Operating Level (R1933) for a complete ramp waveform test oscilloscope display of approximately 2.5 V amplitude and a repetition rate of approximately one cycle per .2 ms. This should produce a 466 display that is just brighter than the display that is produced when R1933 is set so the display sides begin to darken. See Fig. 5-10A through C. Then disconnect the test oscilloscope 10X probe and ground lead from the 466.

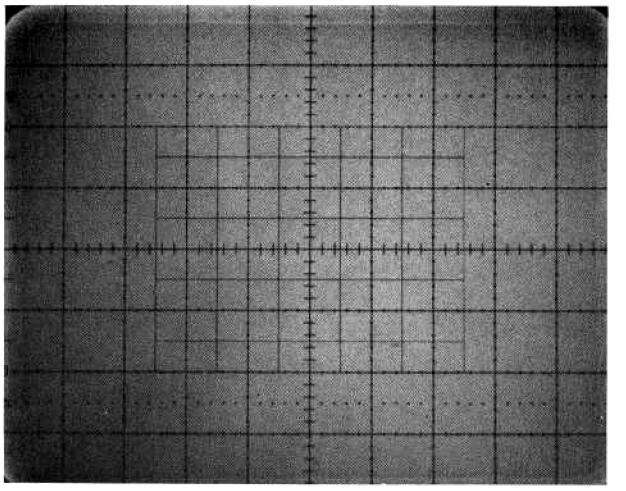

A. Incorrect R1933 adjustment (too far counter-clockwise).



B. Incorrect R1933 adjustment (too far clockwise).

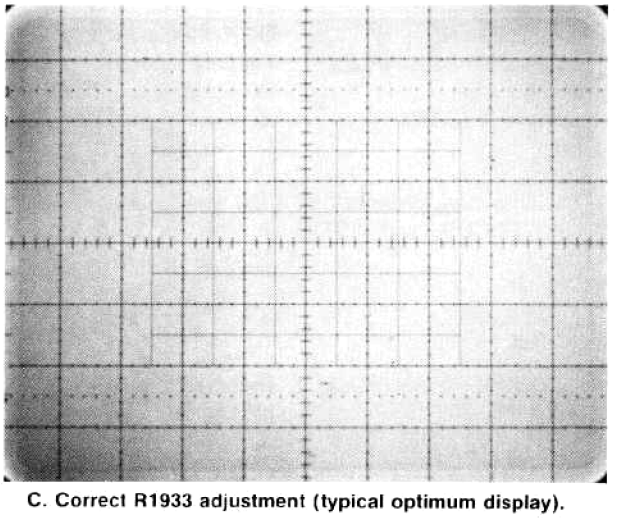

C. Correct R1933 adjustment (typical optimum display).

1753-76

Fig. 5-10. Front Mesh Op Level (R1933) adjustment.

http://manoman.sqhill.com

NOTE

This sets STORAGE LEVEL maximum range. If set too high, screen fades positive (grows brighter). If set too low, maximum writing speed may not be achieved.

d. Push ERASE button and note intensity level of crt screen. Set STORAGE LEVEL control to approximately 3 o'clock.

e. ADJUST—Front Mesh Prep Level (R1927) until about 1 division on edges of crt screen begin to darken. Push ERASE button after each adjustment of R1927. Adjust R1927 for most uniform light background with darker edges. Depending upon the crt, this often occurs just above the point where two large light spots begin to appear on each side of graticule center. See Fig. 5-11A through C.

f. Set STORAGE LEVEL control to minimum (fully counterclockwise) and push ERASE button.

g. CHECK—Entire screen erases. (Failure to erase completely indicates Front Mesh Prep Level, R1927, is set too high.) Repeat Step 3, parts d and e as necessary.

4. Adjust Fast Mode

a. Set:

A TIME/DIV	.1 μs
Storage Mode	NON STORE (push in)
INTEN	Midrange
VIEW TIME	Minimum (fully counterclockwise)
STORAGE LEVEL	Minimum (fully counterclockwise)

b. Connect 9.6 MHz signal from leveled sine-wave generator to CH 1 input via 50 Ω cable and 50 Ω termination.

c. Adjust genertor for 5 div display.

d. Set:

A TRIG LEVEL	Stable display
INTEN	Off (fully counterclockwise)
Storage Mode	FAST (push in)

e. After each automatic erase cycle, increase STORAGE LEVEL until a small amount of background noise can be seen. Set VIEW TIME control to MAX (in detent) and A TRIG LEVEL fully counterclockwise.

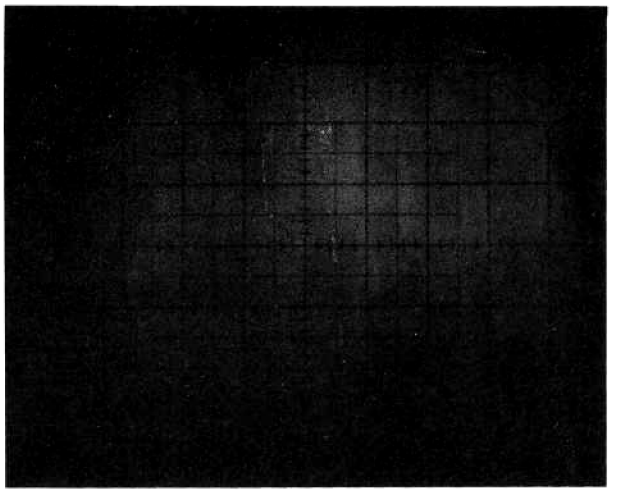

A. Incorrect R1927 adjustment (background level too low).

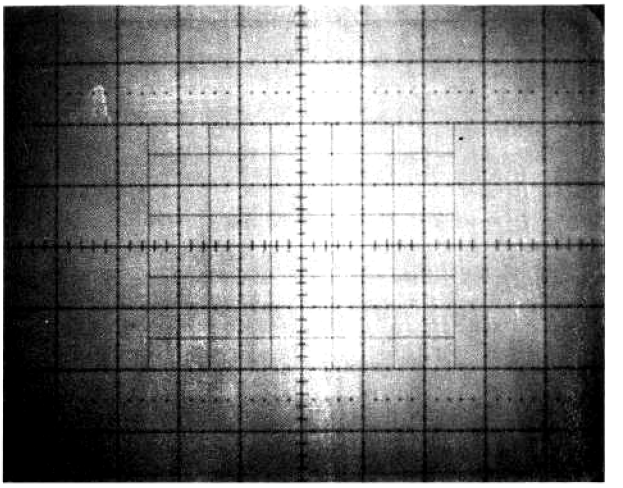

B. Incorrect R1927 adjustment (background level too high).

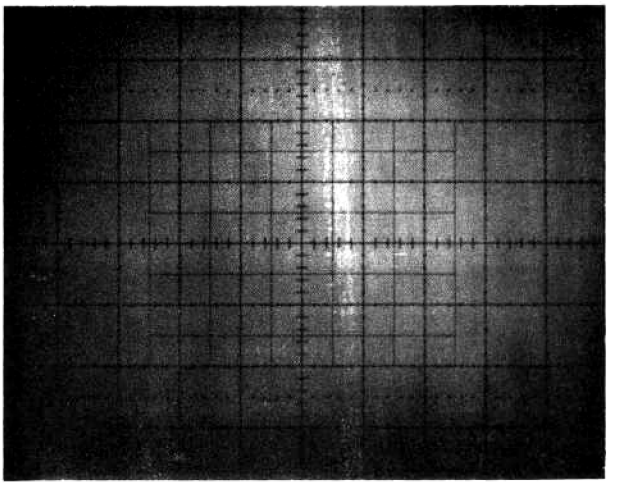

C. Correct R1927 adjustment (typical optimum background level display). 1753-77

Fig. 5-11. Front Mesh Prep Level (R1927) adjustment (STORAGE LEVEL set at 3 o'clock).

http://manoman.sqhill.com

f. Push ERASE button and wait 15 seconds.

g. Turn A TRIG LEVEL clockwise just enough to trigger the sweep, and note brightness level of stored information (background noise).

NOTE

In this step and the rest of the Performance Check or Calibration Procedure, when instructed to turn the Trigger LEVEL control either clockwise or counter-clockwise to trigger the sweep, turn the control only to the triggering point; do not turn it to the extreme of rotation.

h. Immediately push the ERASE button and trigger another sweep and compare level of stored informantion to that noted in part g.

CHECK—Minimum fade-up or fade-down (brightening or dimming).

ADJUST—Front Mesh Hold Level (R1935) for no fade-up or fade-down after 15 seconds. If display in part g fades up, turn R1935 clockwise. Set A TRIG LEVEL fully counter-clockwise. Repeat parts f through h as necessary. See Fig. 5-12A through C.

i. Push ERASE button and wait 1 minute.

j. Trigger sweep by turning A TRIG LEVEL clockwise and note brightness level of stored information (background noise).

k. Immediately push ERASE button, trigger another sweep, and compare level of stored information to the previous level. Fine-adjust R1935 as necessary for minimum fade-up or fade-down after 1 minute. Repeat parts i through k as necessary to achieve minimum fade-up and fade-down after 1 minute.

l. Set:

Storage Mode	FAST (push in)
VIEW TIME	Minimum (fully counter-clockwise)
INTEN	Maximum (fully clockwise)
Fine Fast Transfer Level (R1987)	Midrange

m. Wait several automatic erase cycles.

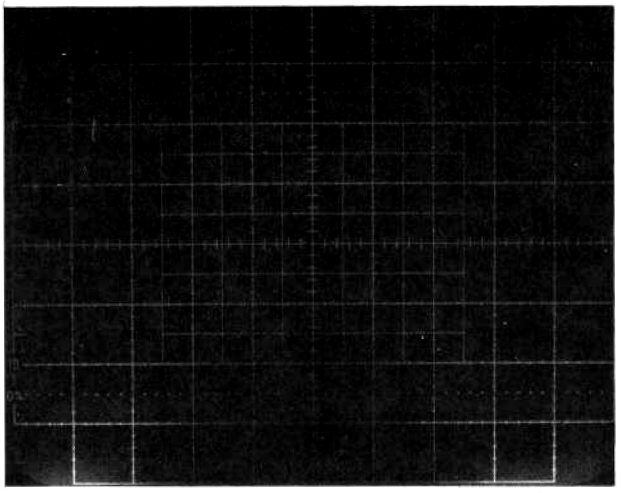

A. Incorrect R1935 adjustment (display fading negative).

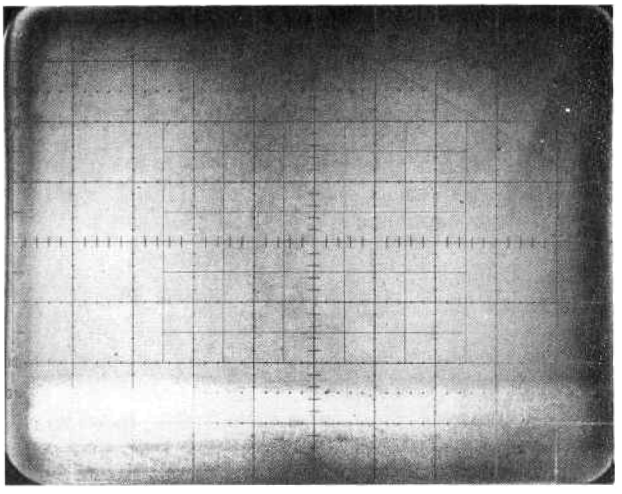

B. Incorrect R1935 adjustment (display fading positive).

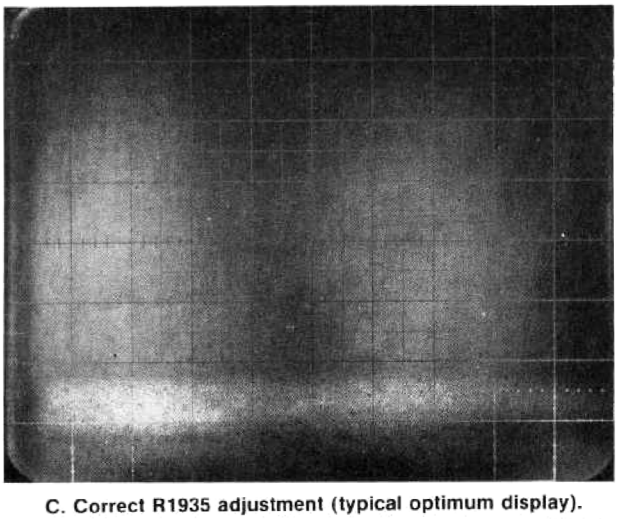

C. Correct R1935 adjustment (typical optimum display).

1753-78

Fig. 5-12. Front Mesh Hold Level (R1935) adjustment.

http://manoman.sqhill.com

ADJUST—Coarse Fast Transfer Level (R1989) for well-defined display with small amount of background storage. (Adjust STORAGE LEVEL as necessary.)

n. Set:

VIEW TIME	MAX (in detent)
A TRIG LEVEL	Fully clockwise

o. Push ERASE button and wait 15 seconds.

p. Trigger sweep by turning A TRIG LEVEL counterclockwise (just to the triggering point) and note brightness level of stored trace and background level.

q. Immediately push ERASE button and trigger another sweep and compare level of stored information to that noted in part p.

CHECK—Minimum fade-up or fade-down of well-defined stored trace.

ADJUST—Fast Mesh Prep (R1982) for minimum fade-up or fade-down, after 15 seconds. (If 1st display fades up, turn R1982 counterclockwise.)

INTERACTION—Fast Mesh Prep (R1982) and Front Mesh Hold (R1935). Readjust R1935 and R1989 (see part t) as needed to maintain minimum fade-up or fade-down of background in parts o and p. Adjust STORAGE LEVEL control as needed to maintain background level of part q. Turn A TRIG LEVEL fully clockwise.

r. Push ERASE button and wait 1 minute.

s. Trigger sweep by turning A TRIG LEVEL counterclockwise and note brightness of stored information.

t. Immediately push ERASE button and compare level of stored information to that noted in part s.

CHECK—Minimum fade-up or fade-down.

ADJUST—Fast Mesh Prep (R1982) for minimum fade-up or fade-down. (If 1st display fades up, turn R1982 counterclockwise.)

INTERACTION—Fast Mesh Prep (R1982) and Coarse Fast Transfer Level (R1989). Readjust R1989 as needed to maintain display transfer level (well-defined, stored trace).

u. Set:

A TRIGGER LEVEL	0
VIEW TIME	Minimum (fully counterclockwise)

CHECK—Best trace transfer.

ADJUST—Coarse Fast Transfer Level (R1989) and STORAGE LEVEL control for best stored display. See Fig. 5-13.

5. Check Full Scan Storage Writing Rate

a. Set:

Storage Mode	FAST (push in)
A TRIG LEVEL	Fully clockwise

b. Set VIEW TIME control to MAX (in detent) and push ERASE button and wait 1 minute.

c. Trigger sweep by turning A TRIG LEVEL control counterclockwise.

CHECK—Trace is stored and distinguishable from background, everywhere within center 8 x 6 div, for 15 seconds or more.

d. Set:

Storage Mode	NON STORE (push in)
A TIME/DIV VAR	Fully counterclockwise

e. Adjust leveled sine-wave genertor for 5 div, 3.2 MHz display. (Adjust A TRIG LEVEL control as necessary for a triggered display.)

f. Adjust FOCUS and ASTIG controls for best display.

g. Set:

Storage Mode	FAST (push in)
VIEW TIME	Minimum (fully counterclockwise)
STORAGE LEVEL	Best display

http://manoman.sqhill.com

h. Set:

VIEW TIME	MAX (in detent)
A TRIG LEVEL	Fully clockwise

i. Push ERASE button several times to ensure meshes are stable, then wait 3 minutes.

j. Trigger sweep by turning A TRIG LEVEL control counterclockwise.

CHECK—Trace is stored and distinguishable from background, everywhere within center 8 x 6 div, for 15 seconds or more.

k. Set:

A TIME/DIV	10 μs
Storage Mode	NON STORE

l. Adjust leveled sine-wave generator for 3.2 div, 50 kHz display (adjust A TRIG LEVEL control as needed for stable display).

m. Adjust A TIME/DIV VAR control for about 1 cycle/div.

n. Position bottom of display 3 div below center horizontal line.

o. Set:

A TRIG LEVEL	Fully clockwise
A TRIG MODE	SINGL SWP
Storage Mode	VAR PERS (push in)
VIEW TIME	MAX (in detent)
STORAGE LEVEL	NORM

p. Push ERASE button.

q. Rotate STORAGE LEVEL control clockwise until screen starts to brighten.

r. Trigger sweep by turning A TRIG LEVEL control counterclockwise.

CHECK—Trace is stored and distinguishable from background, within center 8 horizontal div, for 15 seconds or more.

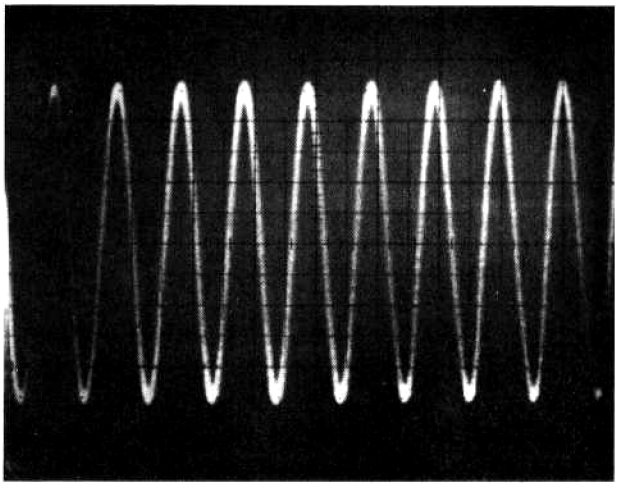

A. Incorrect Adjustment (fading negative).

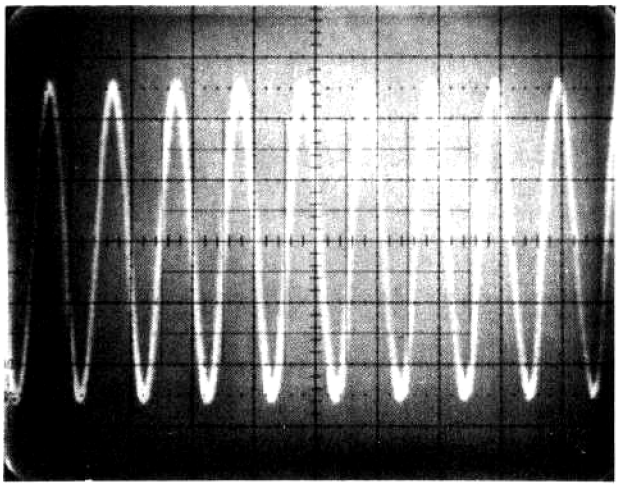

B. Incorrect adjustment (fading positive).

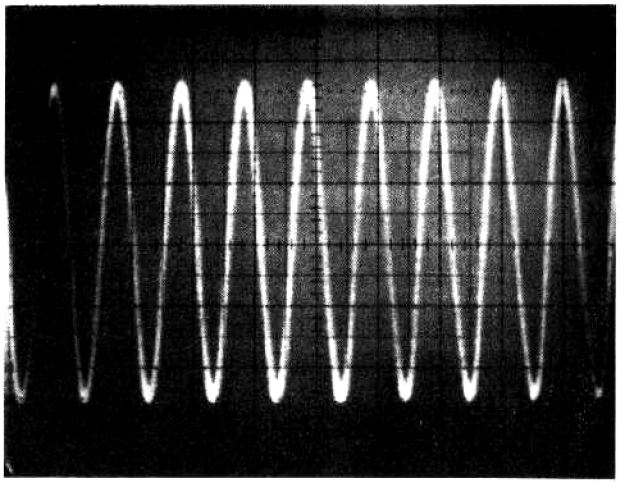

C. Correct adjustment.

1753-79

Fig. 5-13. Display when R1982, R1989, and STORAGE LEVEL are adjusted for FAST storage.

http://manoman.sqhill.com

s. Set A TRIG MODE switch to AUTO and position top of display 3 div above center horizontal line.

t. Set:

A TRIG LEVEL	Fully clockwise
A TRIG MODE	SINGL SWP

u. Push ERASE button, then trigger sweep by turning A TRIG LEVEL control counterclockwise.

CHECK—Trace is stored and distinguishable from background, everywhere within center 8 horizontal div, for 15 seconds or more.

6. Check Reduced Scan Writing Speed

NOTE

All writing speeds in Step 6 are referenced to the small center graticule (.45 cm = 1 div). All voltage amplitudes and TIME/DIV settings are referenced to the large graticule (0.9 cm = 1 div) even though the oscilloscope is in Reduced Scan mode.

a. Set:

Storage Mode	NON STORE (push in)
A TRIG MODE	AUTO
INTEN	Do not rotate
REDUCED SCAN (PULL)	Pull
A TIME/DIV	5 μs
X10 MAG	On (button in)

b. Adjust leveled sine-wave generator for 1.4 large div, 350 kHz display.

c. Set A TRIG LEVEL control as needed for stable display and A TIME/DIV VAR control for about 1 cycle/large div.

d. Position center of display to top of small graticule.

ADJUST—FOCUS and ASTIG controls for best display.

e. Set:

A TRIG LEVEL	Fully clockwise
A TRIG MODE	SINGL SWP
Storage Mode	VAR PERS
STORAGE LEVEL	NORM

f. Push ERASE button.

g. Set STORAGE LEVEL control to where screen just starts to brighten.

h. Trigger sweep by turning A TRIG LEVEL control counterclockwise.

CHECK—Trace is stored and distinguishable from background, everywhere within small graticule, for 15 seconds or more.

i. Set A TRIG MODE switch to AUTO and position center of display to bottom of small graticule.

j. Set:

A TRIG LEVEL	Fully clockwise
A TRIG MODE	SINGL SWP

k. Push ERASE button, then trigger sweep by turning A TRIG LEVEL control counterclockwise.

CHECK—Trace is stored and distinguishable from background, everywhere within small graticule, for 15 seconds or more.

l. Set A TRIG MODE to AUTO and position display to vertical center.

m. Set:

A TRIG LEVEL	Fully clockwise
A TRIG MODE	SINGL SWP

n. Push ERASE button, then trigger sweep by turning A TRIG LEVEL control counterclockwise.

CHECK—Trace is stored and distinguishable from background, everywhere within small graticule, for 15 seconds or more.

o. Set:

Storage Mode	NON STORE
A TRIG MODE	AUTO
A TIME/DIV	.05 μs
VIEW TIME	Minimum (fully counterclockwise)

http://manoman.sqhill.com

p. Adjust leveled sine-wave generator for 5 large div, 96 MHz display.

q. Set A TRIG LEVEL control as needed for stable display and A TIME/DIV VAR control to cal (in detent).

r. Set STORAGE MODE switch to FAST.

s. Adjust STORAGE LEVEL control for best stored display. Do not readjust STORAGE LEVEL control for rest of Step 6.

t. Set VIEW TIME control to MAX (in detent).

u. Set A TRIG LEVEL control fully clockwise, push ERASE button and wait 1 minute.

v. Trigger sweep by turning A TRIG LEVEL control counterclockwise.

CHECK—Trace is stored and distinguishable from background, everywhere within small graticule, for 15 seconds or more.

w. Set:

Storage Mode	NON STORE (push in)
A TRIG LEVEL	Stable display
A TIME/DIV	.1 μs

x. Adjust leveled sine-wave generator for 5 large div, 32 MHz display.

y. Adjust A TIME/DIV VAR control for about 1 cycle/large div.

z. Set A TRIG LEVEL control fully clockwise, Storage Mode switch to FAST, push ERASE button several times and wait 3 minutes.

aa. Trigger sweep by turning A TRIG LEVEL control counterclockwise.

CHECK— Trace is stored and distinguishable from background, everywhere within small graticule, for 15 seconds or more.

ab. Disconnect leveled sine-wave generator.

ac. Push in NON STORE button, set VAR TIME/DIV to cal.

http://manoman.sqhill.com

H. X-Y DISPLAY, Z-AXIS AND GATE OUTPUTS

Equipment Required

1. Amplitude Calibrator
2. Leveled Sine-Wave Generator
3. Test Oscilloscope
4. 42 inch 50 Ω BNC Cable (2 required)
5. 50 Ω BNC Termination
6. Dual-Input Coupler
7. BNC T Connector
8. Three-inch screwdriver

See ADJUSTMENT LOCATIONS 1 pull-out page for adjustments and test points (TP).

466 Control Settings (*Indicates changes from the previous step)

POWER	ON

Display

REDUCED SCAN (PULL)	Push INTEN in
INTEN	As needed
FOCUS	As needed for focused display
SCALE ILLUM	As desired
ASTIG	Best defined trace

Vertical (CH 1 and CH 2)

*VERT MODE	*CH 2 or X-Y
POSITION	Midrange
*VOLTS/DIV	*5 mV
VAR VOLTS/DIV	Calibrated detent
*CH 1 AC-GND-DC	*AC
CH 2 AC-GND-DC	GND
INVERT	Normal (button out)
20 MHz BW LIMIT	Full bandwidth (button out)

Storage

*NON STORE	*On (button in)
*STORAGE LEVEL	*NORM
*SAVE INTEN	*Midrange
SAVE	Off (button out)
*VIEW TIME	*NORM

Trigger (A and B)

COUPLING	AC
*LEVEL	*Midrange
SLOPE	+
A TRIGGER SOURCE	NORM
B (DLY'D TRIGGER SOURCE	STARTS AFTER DELAY
*TRIG MODE	*AUTO
A TRIG HOLDOFF	NORM

Sweep (A and B)

HORIZ DISPLAY	A
*A TIME/DIV	*X-Y
*B TIME/DIV	*X-Y
*VAR TIME/DIV	*Calibrated detent
X10 MAG	Off (button out)
POSITION (horizontal)	Midrange
FINE	Midrange

1. Check/Adjust X-Axis GAIN

a. Connect 20 mV signal from amplitude calibrator to CH 1 input via 50 Ω cable.

CHECK—Display is 2 dots, with dot centers 4 div apart, within 4% (4 div ±0.16 div).

ADJUST—X-Axis Gain (R1214) for 2 dot display, with dot centers 4 div apart.

b. Set amplitude calibrator for 50 mV signal.

CHECK—Display is 2 dots, with dot centers 10 div apart, within 4% (10 div ±0.4 div).

c. Set CH 1 AC-GND-DC switch to DC.

CHECK—Display is 2 dots, with dot centers 10 div apart, within 4% (10 div ±0.4 div).

d. Disconnect amplitude calibrator.

http://manoman.sqhill.com

2. Check X-Y Phasing

a. Connect leveled sine-wave generator signal to both inputs via 50 Ω cable, 50 Ω termination, dual-input coupler to CH 1 and CH 2 inputs.

b. Adjust leveled sine-wave generator for 8 div, 50 kHz signal.

c. Set CH 2 AC-GND-DC switch to DC.

d. Adjust CH 2 POSITION control and horizontal POSITION controls to center display (see Fig. 5-14).

CHECK—Opening is 0.4 div or less, measured along center graticule line (see Fig. 5-14).

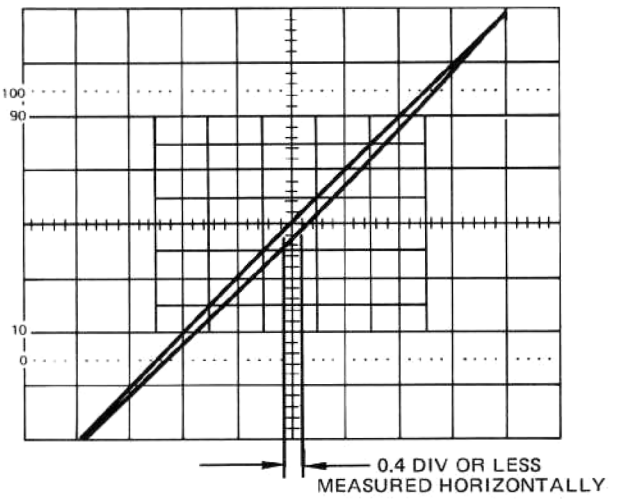

Fig. 5-14. X-Y Phasing Check.

3. Check X-Axis Bandwidth

a. Set CH 2 AC-GND-DC switch to GND.

b. Remove dual-input coupler and connected leveled sine-wave generator for CH 1 input via 50 Ω cable and 50 Ω termination.

c. Adjust leveled sine-wave generator for 10 div, 50 kHz display.

d. Adjust leveled sine-wave generator to 4.0 MHz.

CHECK—Display is 7 div or more.

e. Disconnect leveled sine-wave generator.

4. Check Z-Axis Sensitivity

a. Set:

A TIME/DIV	.2 ms
A TRIG SOURCE	EXT

b. Connect 5 V signal from amplitude calibrator via 50 Ω cable, BNC T-connector and 50 Ω cable to EXT Z-AXIS input and A EXT Trigger input.

c. Adjust A TRIG LEVEL control for triggered display (TRIG LED is lit).

CHECK—Trace is intensity modulated at normal (and lower) INTEN control settings.

d. Disconnect amplitude calibrator.

5. Check Z-Axis Maximum Usable Frequency

a. Set:

A TIME/DIV	.05 μs
CH 2 VOLTS/DIV	1
CH 2 AC-GND-DC	DC

b. Connect leveled sine-wave generator, via 50 Ω cable and BNC T-connector to A EXT Trigger input then through 50 Ω cable to CH 2 input.

c. Set leveled sine-wave generator for 5 div (5 V) 50 MHz display.

d. Move cable from CH 2 input to EXT Z-AXIS input.

CHECK—Trace is intensity modulated at normal (and lower) INTEN control settings.

e. Disconnect leveled sine-wave generator, cables, and connectors.

http://manoman.sqhill.com

6. Check A and B Gates Out

a. Set:

TIME/DIV (both)	50 μs
B TRIGGER SOURCE	STARTS AFTER DELAY
DELAY TIME POSITION	Fully counterclockwise

b. Set test oscilloscope controls:

Vertical Mode	Channel 1
Channel 1 Volts/Division	1 V
A Time/Division	0.2 ms

c. Connect test oscilloscope input to A +GATE output via 50 Ω cable.

CHECK—Display is positive, rectangular pulse, about 5.5 V high.

d. Move 50 Ω cable to B +GATE output.

e. Set HORIZ DISPLAY switch to B DLY'D.

CHECK—Display is positive, rectangular pulse, about 5.5 V high.

f. Disconnect test oscilloscope.

http://manoman.sqhill.com

OPTION INFORMATION

Your instrument may be equipped with one or more options. This section describes those options, or directs the reader to where the option is documented.

Option 01	Deletes DM44 Temperature Probe	
Option 04	EMI Environmental	Described in this section
Option 05	TV Sync Separator	Described in this section
Option 07[1]	EXT DC Operation	Described in this section
Option A1 through A4	International Power Cords	Described in this section

[1]Option 07 cannot be installed in instruments equipped with DM-Series Digital Multimeters.

NOTE

The combination 466 and DM Digital Multimeter is considered a separate instrument and not an option. Information about the DM Digital Multimeter portion of the combination is described in a separate manual as follows:

DM44	*Described in manual 070-2036-01*

http://manoman.sqhill.com

OPTION 04

Introduction

This section describes the features of Option 04 as it pertains to the 466 and 464 Oscilloscopes. This circuitry modifies the instrument to meet additional conducted and radiated interference requirements over the frequency range of 150 kHz to 25 MHz (conducted) and 150 kHz to 1 GHz (radiated).

The following additions and changes were made to the standard circuitry to meet the specification requirements:

EMI filter (FL1701) added in series with the input power cord.

Cathode ray tube mesh filter installed to minimize crt faceplate radiation.

Four signal-output bnc connectors on the rear plenum chamber changed to a type that improves shielding of the connected signal leads.

Capacitors added across the transformer secondary supplies.

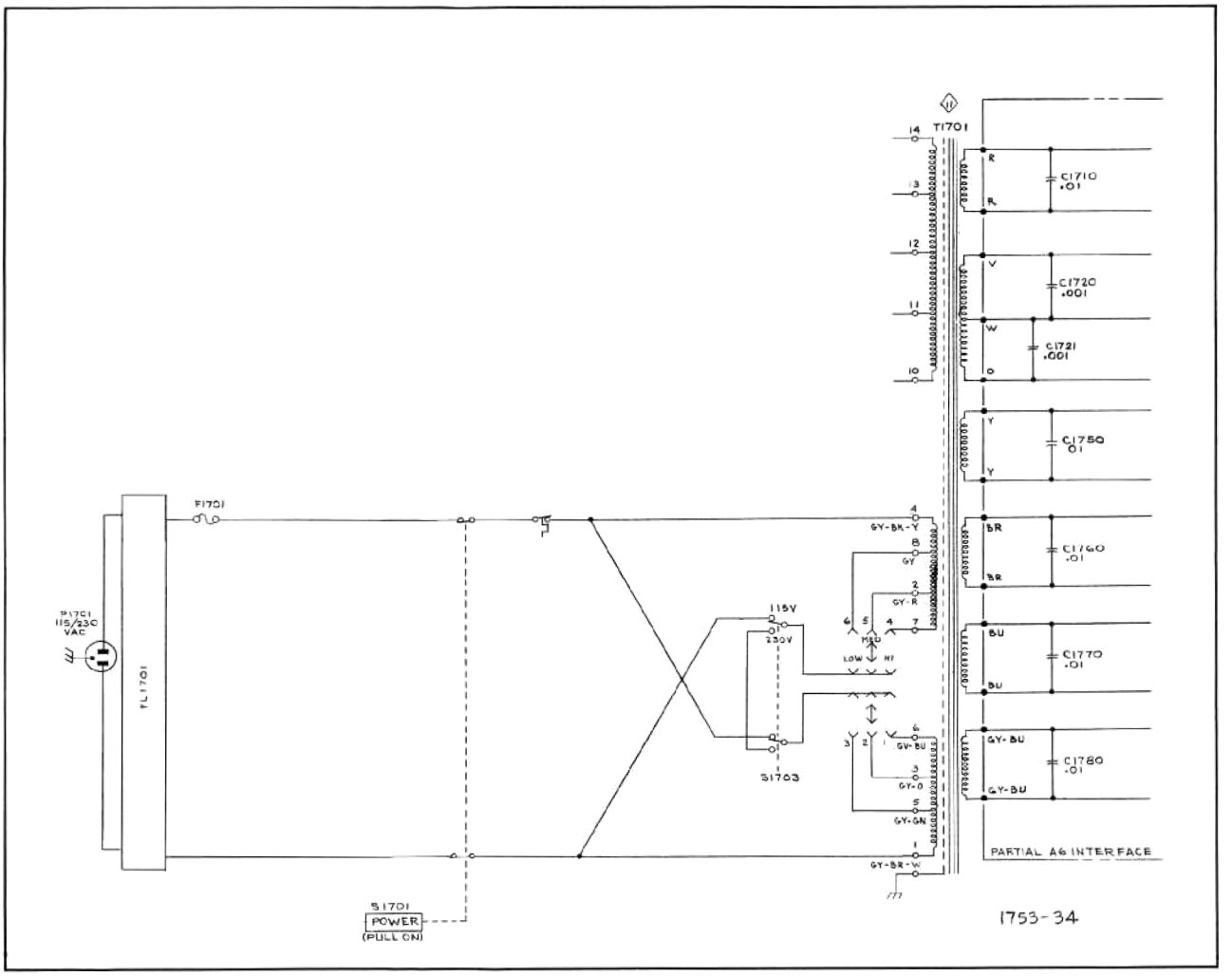

Fig. Option 4-1. Option 04 primary winding with power line filter.

http://manoman.sqhill.com

Component No.	Tektronix Part No.	Serial/Model No. Eff	Dscont	Name & Description	Mfr Code	Mfr Part Number
				REPLACEABLE ELECTRICAL PARTS OPTION 04 ONLY		
A6C1710	283-0003-00			CAP.,FXD,CER DI:0.01UF,+80-20%,150V	59821	2DDH66J103Z
A6C1710	----- -----			(WHEN INSTRUMENT IS EQUIPPED WITH BOTH		
A6C1710	----- -----			OPT 4 AND OPT 7, ONLY ONE SET OF THESE		
A6C1710	----- -----			CAPACITORS IS USED)		
A6C1720	283-0000-00			CAP.,FXD,CER DI:0.001UF,+100-0%,500V	59660	831610Y5U0102P
A6C1720	----- -----			(SEE FOOTNOTE ON A6C1710)		
A6C1721	283-0000-00			CAP.,FXD,CER DI:0.001UF,+100-0%,500V	59660	831610Y5U0102P
A6C1721	----- -----			(SEE FOOTNOTE ON A6C1710)		
A6C1750	283-0003-00			CAP.,FXD,CER DI:0.01UF,+80-20%,150V	59821	2DDH66J103Z
A6C1750	----- -----			(SEE FOOTNOTE ON A6C1710)		
A6C1760	283-0003-00			CAP.,FXD,CER DI:0.01UF,+80-20%,150V	59821	2DDH66J103Z
A6C1760	----- -----			(SEE FOOTNOTE ON A6C1710)		
A6C1770	283-0003-00			CAP.,FXD,CER DI:0.01UF,+80-20%,150V	59821	2DDH66J103Z
A6C1770	----- -----			(SEE FOOTNOTE ON A6C1710)		
A6C1780	283-0003-00			CAP.,FXD,CER DI:0.01UF,+80-20%,150V	59821	2DDH66J103Z
A6C1780	----- -----			(SEE FOOTNOTE ON A6C1710)		
				CHASSIS PARTS		
FL1701	119-0376-01			FILTER,RAD INT:2 X 3A,250V,400 HZ	80009	119-0376-01
J145	131-1315-01			CONN,RCPT,ELEC:BNC,FEMALE	24931	28JR 306-1
J159	131-1315-01			CONN,RCPT,ELEC:BNC,FEMALE	24931	28JR 306-1
J859	131-1315-01			CONN,RCPT,ELEC:BNC,FEMALE	24931	28JR 306-1
J918	131-1315-01			CONN,RCPT,ELEC:BNC,FEMALE	24931	28JR 306-1

Fig. & Index No.	Tektronix Part No.	Serial/Model No. Eff	Dscont	Qty	1 2 3 4 5	Name & Description	Mfr Code	Mfr Part Number
						REPLACEABLE MECHANICAL PARTS OPTION 04		
	119-0376-01			1		FILTER,RAD INT:2 X 3A,250V,400 HZ	80009	119-0376-01
						**********(ATTACHING PARTS)**********		
	211-0038-00			1		SCREW,MACHINE:4-40 X 0.312,FLH,100 DEG	83385	ORD BY DESCR
	210-0586-00			1		NUT,PL,ASSEM WA:4-40 X 0.25,STL,CD PL	78189	211-041800-00
						**********(END ATTACHING PARTS)**********		
	131-0707-00			1		CONNECTOR,TERM:22-26 AWG,BRS & CU BE GOLD	22526	47439
	131-0708-00			1		CONTACT,ELEC:0.48"L,28-32 AWG WIRE	22526	47437
	131-1310-00			1		CONTACT,ELEC:MESH FILTER GROUND	80009	131-1310-00
	----- -----			4		CONNECTOR,RCPT,:(SEE T145,T159,T859,T918 R		
	179-2741-02			1		WIRING HARNESS:OPTION 04	80009	179-2741-02
	210-0774-00			2		EYELET,METALLIC:0.152 OD X 0.245 INCH L,BR	80009	210-0774-00
	210-0775-00			2		EYELET,METALLIC:0.126 OD X 0.23 INCH L,BRS	80009	210-0775-00
	378-0726-00			1		FILTER,MESH:EMI	80009	378-0726-00
	348-0239-00			1		GROMMET,PLASTIC:DK GRAY,U-SHAPE,0.27 ID	80009	348-0239-00

http://manoman.sghill.com

OPTION 05 TV SYNC SEPARATOR

INTRODUCTION

Option 05, when installed in the 466 or 464 Oscilloscope, adds a TV Sync Separator and other changes to provide stable sweep triggering from composite video waveforms. Two positions are added to the A Trigger COUPLING switch; TV FIELD and TV LINE. When these positions are selected, the A Sweep may be triggered at the Field or Line rate with the A Trigger LEVEL control. A TV LINE position is added to the B Trigger SOURCE switch. In this position, the B Sweep may be triggered at the line rate. The Option 05 circuitry accepts sync-positive or sync-negative video from Channel 1, Channel 2, or external input. Recognition circuits accommodate 405-525-625 line 50 or 60 Hz field rate broadcast systems, and are compatible with closed circuit systems with up to 1201 line 60 Hz field rates.

GENERAL INFORMATION

Option 05 provides the instrument with front-panel selection of additional processing of trigger signals, to facilitate observation and measurement of composite video and related television waveforms. Added circuits provide amplification, selectable polarity inversion, clipping, and vertical-sync recognition. Outputs of vertical and horizontal (field and line rate) triggers are connected to the A Sweep Trigger COUPLING switch, and horizontal (line rate) triggers are connected to the B Sweep Trigger SOURCE switch.

When the A Trigger COUPLING switch is set to TV FIELD or TV LINE positions, the A Sweep Trigger SOURCE switch selects the source of signals to be processed in the Sync Separator. This includes NORM (composite vertical signal), Ch 1, CH 2, EXT, or EXT ÷ 10 (LINE source is not a usable function with TV FIELD or TV LINE coupling).

The Option 05 circuitry may be operated from normal sync-negative composite video (with the A Sweep Trigger SLOPE switch at −); or inverted video (SLOPE switch set to +), for most standard broadcast systems using from 405 to 819 lines, 50 or 60 Hz field rates, or for closed-circuit systems using up to 1201 lines and 60 Hz field.

When the A Sweep Trigger COUPLING switch is set to TV FIELD or TV LINE, the output of the Sync Separator is automatically applied to the A Sweep Trigger circuits, and only this signal may be used for triggering the A Sweep. For B Sweep, the horizontal sync signal (line-rate sync) from the

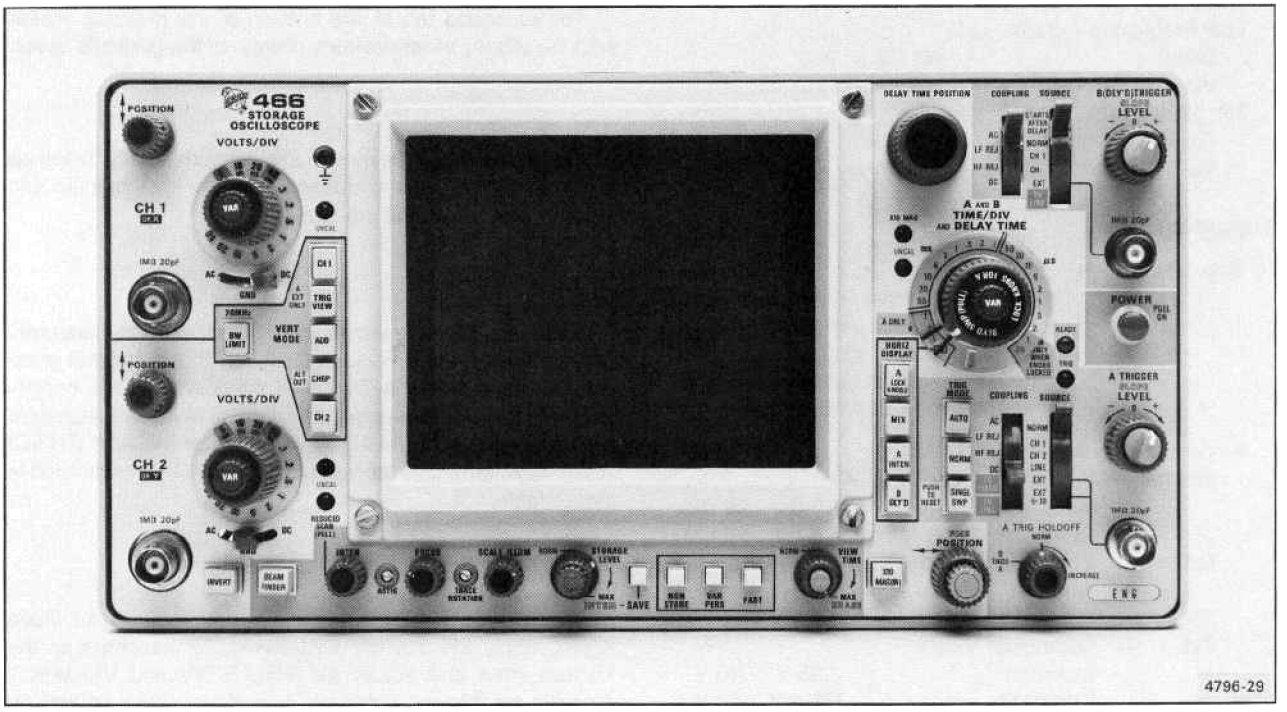

Fig. Option 5-1. 466 Oscilloscope with Option 05.

http://manoman.sqhill.com

Separator is fed only to the TV LINE position on the B Sweep Trigger SOURCE switch, which may be selected at the option of the user.

To optimize video measurements, the vertical amplifier AC input coupling capacitors are increased from .02 to 0.2 μF. The larger physical size of these capacitors increases the input shunt capacitance, which is normalized at 20 pF.

This description includes the characteristics, operation, and maintenance of the added features of the Option 05. For all other information concerning the 466 or 464 Oscilloscopes, refer to the appropriate Operators and Service manual sections.

CHARACTERISTICS

Characteristics as listed in Section 1 apply except as noted below:

Input Characteristics

Resistance	1 MΩ ± 2%
Capacitance	24 pF ±2%
Time Constant	24 μs ±2%

AC Input Coupling

Low Frequency −3 dB	
Direct	≤1 Hz
Via 10X Passive Probe	≤0.1 Hz
Tilt, 10 ms wide pulse	
Direct	≤2.5%
Via 10X Passive Probe	≤0.25%

Triggering

Sync Separation — Stable video rejection and sync separation from sync-positive or sync-negative composite video, 405 to 819 line, 50 or 60 Hz field rate, or for closed-circuit systems using up to 1201 lines on a 60 Hz field.

Amplitude Requirement (p-p)		Min	Max
Internal	Composite Video (nominal)[1]	1.2 div	20 div
	Composite Sync	0.5 div	20 div
External	Composite Video (nominal)	225 mV	4 V
	Composite sync	75 mV	4 V
Ext ÷ 10	Composite Video (nominal)	2.25 V	40 V
	Composite sync	750 mV	40 V

[1]Peak video ≈7/3 sync amplitude.

FURNISHED ACCESSORIES

Add:

1 Graticule, NTSC (CCIR System M), −40 to +100 units, with 7.5 unit setup line; horizontal divisions along "0" line. Tektronix Part Number 337-1674-08.

1 Graticule, CCIR (CCIR System B), 0 to +100 units, 35 unit setup line; horizontal divisions along "30" line. Tektronix Part Number 337-1674-09.

OPERATING INFORMATION

The following instructions pertain primarily to use of Option 05 in TV applications. For general operating and application information, see the Operators Manual.

Installation of Video Graticule

To install a video graticule, loosen (about 6 turns) the four captive screws holding the crt bezel in place, and remove the bezel. Remove the light filter from the two bosses on the bezel, and install the desired graticule on these bosses, with the marking on the outside.

The extended tab at the bottom of the graticule mates with the slightly wider (bottom) margin of the graticule cover.

The graticule can be moved slightly horizontally to line up the external graticule and mask with the crt graticule and viewing area. Reinstall the bezel.

When the video graticule is installed, the ten horizontal divisions along the "0" line correspond to the internal graticule divisions, and the TIME/DIV calibration of the oscilloscope is correct. However, the vertical divisions represent only proportions of the 100-unit (CCIR) or 140-unit (NTSC) video waveform, and the vertical "VOLTS/DIV" calibration is inapplicable.

To calibrate for a standard 1 V (nominal) studio video signal, apply the 300 mV CALIBRATOR waveform to the Vertical input and adjust the VOLTS/DIV and VARIABLE controls so that the displayed waveform occupies just 30 units (CCIR graticule) or 42 units (NTSC graticule). This adjustment may be performed with a free-running sweep.

http://manoman.sqhill.com

Operation of the Sync Separator

To trigger the 466 or 464 on a video signal, perform the following three steps:

a. Set the A Sweep COUPLING switch to TV FIELD or TV LINE.

b. Provide the A Trigger input circuit with a suitable Composite Sync or Composite Video waveform.

NOTE

Composite Sync is combined Vertical and Horizontal sync as a single waveform, but without video (picture) waveforms; Composite Video is the picture waveform complete with Vertical and Horizontal blanking and sync.

For special considerations in Dual Trace modes (ALT and CHOP), see "Vertical Operating Modes—Special Considerations". For internal triggering, the sync portion of the displayed waveform should be at least 10 units, or 0.5 division on the CCIR graticule; 14 units, or about 0.75 division on the NTSC graticule. For external triggering, the sync portion of the waveform should be at least 75 mV in amplitude, or 0.75 V in the "EXT ÷ 10" mode. Do not exceed the indicated maximum amplitudes (20 div for internal triggering, 40 volts for external triggering), to avoid circuit overloads and partial or complete loss of sync.

c. Select the proper polarity for the video waveform applied. For normal video with sync at the negative peak and positive-going picture information, the A Sweep Trigger SLOPE switch should be set to minus (−); for inverted video having sync at the positive peaks and peak video (white) at the negative peaks, the SLOPE switch should be set to plus (+). The A Sweep SLOPE switch controls an inverting/noninverting signal preamplifier ahead of the sync separator.

Triggering the Sweep

The output of the Sync Separator is fed directly to the A Sweep Trigger circuit; all that is required for triggering is the proper setting of the A Sweep Trigger LEVEL control. To trigger the B Sweep from the Line-rate trigger output, perform the following steps:

a. Make sure the A Sweep is running.

NOTE

The B Sweep cannot be operated independently, and cannot run more than once per operation of the A Sweep. For "composite line" displays, see "Special Measurements" in the following text.

b. Set the B Sweep Trigger SOURCE switch to TV LINE.

c. Set the B Sweep Trigger LEVEL control for a stable triggered sweep.

Vertical Operating Modes—Special Considerations

Dual Trace Modes. For dual trace operation, the Sync Separator input must be taken from CH 1, CH 2, or an external source. (When only one trace is displayed, the NORM position of the A Sweep SOURCE switch may be used.) The Sync Separator is not capable of correct processing of the switched (composite vertical deflection) waveforms present on the NORM bus in the Alternate and Chopped modes; it is therefore not possible to obtain stable simultaneous displays of two independent video signals that are not genlocked together.

Single Channel Triggering. When triggering from Channel 1 or Channel 2, the waveform fed to the Sync Separator is the same (except for positioning) as that displayed on-screen when the channel is turned on. If the VOLTS/DIV VAR control is used to reduce displayed amplitude, the signal to the Sync Separator is also reduced. When the Channel 2 INVERT switch is pushed in, the CH 2 signal to the A Sweep Trigger SOURCE switch is also inverted. Therefore, in selecting the position of the A Sweep SLOPE switch in Internal triggering, it is only necessary to note the polarity of the displayed waveform, disregarding its actual polarity as applied to the Vertical INPUT connector. For external triggering, the actual applied polarity will determine the necessary SLOPE setting.

It is not necessary to display Channel 1 or Channel 2 to obtain CH1 or CH2 triggering. Whenever the AC-GND-DC switch for the channel is not in GND, the input amplifier; and trigger channel are active, regardless of the selection of VERT MODE pushbuttons.

Add Mode. A single-channel trigger signal amplitude is not affected by the contribution of the other channel to an ADD mode display. When the ADD mode with CH2 inverted is used to compare two video waveforms by subtraction, the CH1 or CH2 signal to the Sync Separator will be adequate for stable triggering providing the individual channel signal (when displayed alone) meets the signal requirements.

When the ADD mode is used to display a signal from two sides of a balanced line, the A Sweep SOURCE switch NORM (composite vertical) position may be used if neither Channel signal alone is of sufficient amplitude for stable sync separation and triggering.

http://manoman.sqhill.com

Typical Operation

In a typical operating mode for the Option 05 instrument, the A Sweep establishes the basic frame and field presentation, and the B Sweep allows detailed observation and measurement of various portions of the video waveform.

To obtain stable displays free of interlace jitter (for systems which have 2:1 interlace), the A Sweep TIME/DIV switch should be set to display an odd number of fields plus a fraction of a field, in the unmagnified display. For 50 and 60 Hz field rates, the 2 ms/div setting is usually selected, though for some PAL system observations, a setting of 5 ms/div (approx. 2 1/2 field display) with the A TRIGGER HOLDOFF control set to approximately 4 o'clock (additional 1 field holdoff) may be desirable to maintain a stable display relationship to the four-field PAL burst-blanking sequence. All detail measurements are then made with B Sweep, using the B DLY'D or MIX mode, with the B Sweep SOURCE switch set to either STARTS AFTER DELAY (continuously variable B Sweep start point), or to TV LINE (B Sweep starts after the leading edge of the next horizontal sync pulse following the delay interval set by the DELAY TIME POSITION control and the A Sweep TIME/DIV setting).

Because the leading edge of the sync pulse will not be displayed, the typical B TIME/DIV setting for width measurements on front porch, back porch and horizontal blanking intervals, horizontal sync, serration, and equalizing pulses will be 10 μs/div, to allow display of two consecutive pulses. Use the 10X Magnifier to display the second pulse at 1 μs/div.

For rise- and fall-time measurements on blanking and sync waveforms, trigger the A or B Sweep directly from the displayed waveform (avoiding the processing delay of the sync separator). This permits viewing the triggering edge at sweep rates from .5 to .05 μs/div.

Selecting an Individual Line

NOTE

For field and line identification systems, see "Identifying Fields, Frames, & Lines in 525/60 and 625/50 TV Systems" at the end of this Operating Information text.

The Sync Separator circuit does not differentiate between the two fields of an interlaced frame, or among the four fields of the PAL color frame sequence. However, if a 1 1/2 or 3 1/2 field basic A Sweep cycle is used, the sweep will remain stably locked to a given display until the signal is interrupted.

One-Frame Cycle. To display an entire vertical blanking interval and locate a specific line (e.g., one of the lines containing a specific VIT waveform), set the A Sweep to 2 ms/div and the B Sweep TIME/DIV switch (pull to unlock from A) to 10 μs/div. Use the POSITION control to center the second vertical blanking interval to center-screen, and depress the 10X MAG pushbutton. This will provide sufficient resolution to identify the field. Adjust the A TRIG HOLDOFF as necessary.

If the displayed field is not the desired one, rotate the A Sweep SLOPE control momentarily to the opposite polarity, then back again until the start of the desired field is displayed.

Press A INTEN and use the DELAY TIME POSITION control to position the intensified zone (B Sweep) on the desired line. Pressing the B DLY'D button will then display the desired line.

Two-Frame Cycle. If PAL burst blanking is to be checked, an A Sweep 3 1/2 field cycle (5 ms/div, with the A TRIG HOLDOFF at about 4 o'clock) is required, using B Sweep (MIX mode recommended) to identify fields and lines. At 5 ms/div, only two and a fraction fields will be displayed, with a full field covered by the trigger holdoff interval. To put a specific field on-screen in a particular location will typically require several operations of the SLOPE switch.

Special Measurements

Overscanned Displays. For various video mesurements, it may be desirable to magnify the video waveform vertically beyond the limits of the screen. Under these circumstances, the trigger amplifiers or Sync Separator may be overloaded, blocking out some sync pulses in the vicinity of strong video transitions, or losing sync pulses altogether. To avoid overload problems, use External sync, or use the other vertical channel to supply a constant amplitude signal to the Sync Separator while the overscanned observations are being made. Note, however, that transient-response aberrations in the main vertical amplifier will be increased when the signal is driven off-screen, becoming relatively serious if the amplifier is driven to saturation and cutoff.

Horizontal Sync Pulse Measurements. Rise and fall times and width of horizontal sync pulses may be measured while using the Sync Separator to determine whether part or all of the lines or groups of lines appear to be abnormal. A bright display of all horizontal sync pulses is obtained when the A Sweep COUPLING switch is set to TV LINE.

http://manoman.sqhill.com

RF Interference. Operation in the vicinity of some FM and TV transmitters may show objectionable amounts of RF signal energy in the display, even when coaxial input connections are used. The front-panel 20 MHz BW LIMIT switch will usually eliminate such interference from the display, but will not affect the signal reaching the Sync Separator. Where the RF interferes with Sync Separator operation, external filters will be required. Use of probes designed for 10-30 MHz oscilloscopes will provide 6 to 10 dB attenuation in the 50-100 MHz range, and may be beneficial in reducing interference.

IDENTIFYING FIELDS, FRAMES AND LINES IN 525/60 AND 625/50 TV SYSTEMS

NTSC (CCIR System M)

Field 1 is defined as the field whose first equalizing pulse is one full H interval (63.5 μs) from the preceding horizontal sync pulse. The Field 1 picture starts with a full line of video.

Field 1 lines are numbered 1 through 263, starting with the leading edge of the first equalizing pulse. The first regular horizontal sync pulse after the second equalizing interval is the start of line 10.

Field 2 starts with an equalizing pulse a half-line interval from the preceding horizontal sync pulse. The Field 2 picture starts with a half line of video.

Field 2 lines are numbered 1 through 262, starting with the leading edge of the second equalizing pulse. After the second equalizing interval, the first full line is line 9.

CCIR System B and Similar 625/50 Systems (Including PAL)

In most 625-line, 50 Hz field-rate systems, identification of parts of the picture relies primarily on continuous line numbering rather than on field-and-line identification, except for PAL systems.

The CCIR frame starts with the first (wide) vertical sync pulse following a field which ends with a half-line of video. The first line after the second equalizing interval is line 6; the first picture line is line 23 (half-line of video). The first field of the frame contains lines 1 through the first half of line 313, the picture ending with a full line of video (line 310).

The second field of the frame commences with the leading edge of the first (wide) vertical sync pulse (middle of "line" 313), and runs through line 625 (end of equalizing interval). The first full line after the equalizing interval is line 318; the picture starts on line 336 (full line).

The first field is referred to as "odd", the second field as "even". Note that the identification systems for System M and System B are reversed.

In the four-field PAL sequence with Bruch Sequence Color-burst blanking, the fields are identified as follows:

Field 1: Field that follows a field ending in a half-line of video, when preceding field has color burst on the last full line. Field 1 lines are 1 through 312 and half of line 313. Color burst starts on line 7 of Field 1; a half-line of video appears on line 23.

Field 2: Field that follows a field ending in a full line which does not carry color burst. Field 2 lines are the last half of line 313 through line 625. Color burst starts on line 319 (one line without burst following the last equalizing pulse); a full line of video appears at line 336.

Field 3: Field that follows a field ending in a half line when preceding field has no color burst on its last full line. Field 3 lines are 1 through the first half of line 313. Burst starts on line 6 (immediately following the last equalizing pulse); a half-line of video appears on line 23.

Field 4: Field that follows a field ending in a full line carrying color burst. Field 4 lines are the second half of line 313 through line 625. Color burst for Field 4 starts on line 320 (two full lines without burst follow the last equalizing pulse); video starts with a full line on line 336.

CIRCUIT DESCRIPTION

Introduction

This section describes circuitry unique to Option 05. Refer to the Circuit Description section of this manual for information concerning those portions of the circuitry that are unchanged by Option 05.

Figure Option 5-2 shows the circuit stages for those circuits added or changed by Option 05. This discussion is limited to a general description of those stages. Refer to the schematic diagrams and component location figures at the end of this Option 05 description for a more detailed examination of individual components.

Switching

The added TV FIELD and TV LINE positions of the A trigger COUPLING switch open the conventional signal path to the A trigger circuitry. The TV FIELD and TV LINE positions also couple the appropriate output of the Sync Separator stage to the conventional A trigger generator circuitry.

http://manoman.sqhill.com

The Option 05 TV LINE position on the B trigger SOURCE switch couples line rate trigger signals from the Sync Separator output to the conventional B trigger generator circuitry.

With Option 05, the A trigger SLOPE switch adds connections through P2834 to provide inverting or non-inverting control of the Trigger Amplifier and Inverter stage.

Trigger Pickoff

This stage consists of Q610, a source follower, and Q612, an emitter follower. The stage provides isolation, impedance match to the Trigger Amplifier and Inverter, and minimum loading to the input signal. Gain of the trigger pickoff stage is slightly less than unity. The video trigger signal (internal or external) from the A trigger SOURCE switch is coupled to the input of Q610, while the output of the Trigger Pickoff stage (Q612 emitter) is fed through P612 and P2810 to the Trigger Amplifier and Inverter stages (Q2802, Q2803, & U2810). CR610 protects the input of Q612 from damage when high-amplitude negative signals are present.

Trigger Amplifier and Inverter

This stage consists of Q2802, Q2803, and U2810, and is designed to provide adequate drive and correct polarity for the following Sync Separator stage, which accepts only negative sync (positive-going video). Signal is applied to the Trigger Amplifier and Inverter from the Trigger Pickoff via P2810. Polarity control is applied from the A trigger SLOPE switch through P2834. Output from the stage is fed to Q2813, the Sync Separator input.

When the A trigger SLOPE switch is in the plus position, this stage inverts the signal it receives from the Trigger Pickoff. When the minus SLOPE is selected, the signal is not inverted. Only one transistor, Q2802 or Q2803, conducts at a time. Feedback resistor R2807 controls Operational Amplifier U2810 gain for low amplitude signals, while R2809, CR2807, CR2809 control the gain for higher amplitude signals.

Sync Separator

The Sync Separator strips off the video (picture) information from the incoming sync-negative video output of U2810, amplifies the resulting composite sync for use as

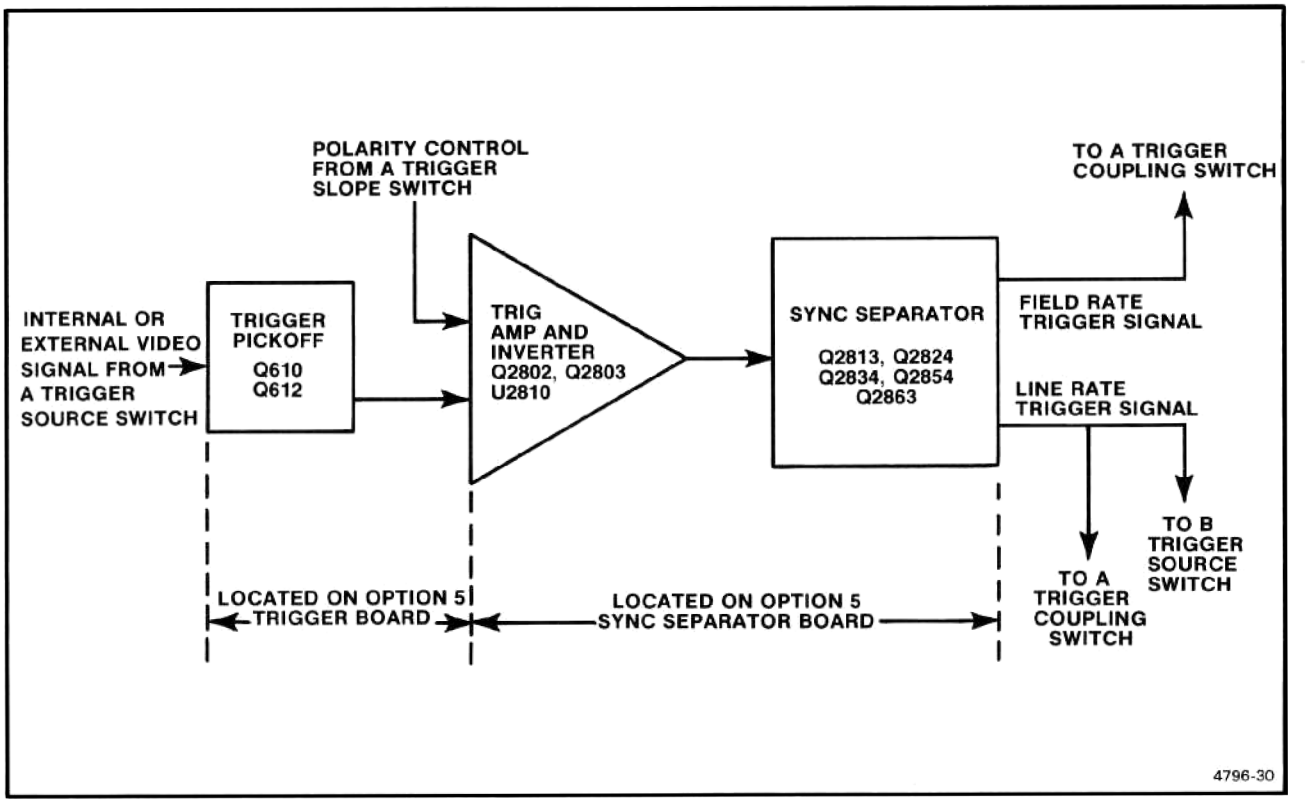

Fig. Option 5-2. Option 05 block diagram.

http://manoman.sqhill.com

horizontal (TV line) sync by A and B sweep triggers, and processes the composite sync to provide vertical (field rate) sync to the A Sweep trigger circuits.

Video Stripper, Q2813 and Q2824, form a limited-swing feedback amplifier which amplifies only the negative peaks of the incoming waveform. The base of Q2813 rests at an equilibrium point of approximately +9.0 V, which is affected slightly by the Clipping Level adjustment R2826. The emitter of Q2824 is held at approximately +10.1 V, and the collector rests at approximately +9 V.

With sync-negative video applied to Q2813, the negative-going peaks (sync) are clamped at the +9 V level. The positive-going portions of the input waveform generate increasing amounts of feedback current via R2818 until Q2824 reaches its negative-swing limit. Beyond this point, further positive input cuts off Q2813, and has negligible effect on the output. When Q2813 is driven positive, the negative excursion at the collector of Q2824 is stopped at approximately +7.6 V. By not permitting Q2824 to be cut off when Q2813 is cut off the output to Q2834 is relatively unaffected by input video excursions. The maximum signal swing at the Q2824 collector for any magnitude of input signal above about 100 mV p-p is about 2 V p-p, with active response confined to the most negative parts of the input signal. The divider R2824-R2825-R2826 sets the bias level for Q2824.

Diodes CR2824-CR2825 provide thermal compensation for Q2834, and have no other circuit function. Q2834 provides TV LINE (horizontal) composite sync output to the A & B Sweep Trigger SOURCE switches to serve as TV LINE sync, and drive to the Vertical Sync Recognizer Q2854-Q2863. In the quiescent state, Q2834 is cut off, its emitter held at +5.1 V and its base below the turn-on level of +5.7 V. The collector is at +10.1 V, prevented from rising further above the +9.6 V supply by CR2828. When negative-going sync pulses arrive at Q2813, they are inverted by Q2824 and provide sufficient base current to saturate Q2834. Q2834 is driven between saturation and cutoff, and generates approximately 0.1 V, suitable for A and B sweep triggering, and is ac coupled to the A and B sweep trigger circuitry.

The Vertical Sync Recognizer, Q2854 and Q2863, recognizes the various forms of TV Vertical (Field Rate) sync pulses by providing an output signal proportional in amplitude to the duration (width) of a preceding negative-going pulse. The output signal occurs on the trailing edge of the input pulse. In most TV systems using sync-negative video, a Vertical sync pulse consists of a train of negative-going pulses about 5 times wider than horizontal sync pulses, and separated by narrow intervals (serrations) of about the same width as horizontal sync pulses. In these systems, the recognizer produces a train of narrow output pulses, one for each serration of the sync pulse. In some 405/50 and 819/50 broadcast systems and in many closed circuit TV systems, the vertical sync pulse is a single negative-going (sync-negative) pulse having a duration of several full horizontal lines. In these systems, the recognizer puts out a single narrow pulse at the end of the sync pulse.

Q2854 is driven by the Q2834 Sync Amplifier with a 4.9 V signal, with the negative portion of the signal representing the sync portion of the incoming waveform. In the absence of sync pulses, the collector of Q2834 is high and CR2831 holds the base of Q2834 at about +9.6 V. When the Q2834 collector steps negative with a sync pulse, Q2834 is cut off and its collector steps positive by about 350 mV. The output stage network sets the emitter of Q2863 near +10.2 V and provides Q2854 with a collector voltage of around +12.2 V. The 60 μA collector current of Q2854 (set by approximately 9.0 V drop across R2856) generates around 0.35 V drop in the equivalent 5.5 kΩ collector load. This sets the base voltage of Q2863 at +11.9 V nominal, ensuring that Q2863 is cut off.

When Q2854 is cut off, C2856 discharges toward ground on a 30 μs time-constant, starting at a rate of about −300 mV per microsecond. The Q2854 emitter runs down 0.5 to 2.0 V in the negative direction for the duration of a 2 to 6 μs wide horizontal sync or vertical equalizing pulse. For the longer duration vertical sync pulses, the emitter runs down 4 V (typical for 819/50 system with serrations) to 5.5 V (run-down stops when the emitter reaches +4.2 V since the base is held at +4.7 V).

When the collector of the Q2834 Sync Amplifier steps positive at the end of the pulse, a negative-going output pulse is generated at the collector of Q2854 that is proportional to the amount of emitter run-down. The exact magnitude of this output pulse is a complex function of the rate-of-rise of the positive transition from Q2834, the value of C2856, the collector-to-base capacitance of Q2854 (including C2854) and the collector-to-ground capacitance of Q2854. The output pulse at the Q2854 collector is approximately 80% of the amount of emitter run-down.

The positive-going trailing edge of the differentiated Q2854 collector output pulse, which is coupled back to the base by C2854 and the Q2854 collector capacitance, creates an overshoot at the base of Q2854. This drives the base about 1.5 V above the quiescent level at the end of a Vertical sync pulse (this overshoot does not appear on the Q2834 collector bus). The Q2854 collector waveform stays negative during the time the base is being driven positive; when the base stops at the quiescent level, the collector voltage rises rapidly, coupling an apparent overshoot into the base waveform. This condition tends to reduce the amount of usable run-down for Vertical serrations following the first one, but is otherwise insignificant.

http://manoman.sqhill.com

The output stage bias network, keeping Q2863 cut off in the quiescent state, inhibits the output of Q2854 collector pulses of less than about 2 V peak (negative) amplitude. The larger pulses corresponding to the trailing edge of vertical sync pulses are large enough to turn on Q2863, and provide output signals of 1 to 2.5 V at the input end of C2865. Because of the short risetime of the generated pulses, the output stage responds a small amount, even during cutoff, due to base-emitter capacitance in Q2863; this is particularly noticeable when the load is removed.

With the load disconnected, the negative-going output pulses are 2 to 2.5 V in amplitude (somewhat smaller in 819/50 systems with serrated sync pulses), with a risetime of about 25 ns and width of about 150 ns. Because they are so narrow, with a low repetition rate, they are hard to locate in an oscilloscope display. They are frequently misinterpreted as to their presence or absence, their amplitude, and even polarity (a small trailing-edge overshoot is often mistaken for the pulse itself).

The output stage is diode-connected to limit positive-going peaks in the output. Output coupling capacitor C2865 attenuates the signal, providing a proper level to the A Trigger circuits, to permit correct trigger LEVEL control action.

CALIBRATION PROCEDURE

Introduction

This procedure ensures proper calibration and performance of the TV Sync Separator circuitry included in Option 05, and is based on the 525/60 line and field system. If your Option 05 instrument is calibrated with the equipment prescribed for the 525/60 system, it should perform satisfactorily with other line and field systems.

Before starting this procedure, make sure the rest of your instrument meets all the specifications covered by the Performance Check or Calibration Procedure in the main portion of this manual. For Option 05 instruments, during the main Performance Check or Calibration Procedure, use the 24 pF Normalizer (067-0539-00) for vertical attenuator input compensation. Refer to the "Test Equipment Required" table in this description (Table Option 5-1) for complete information on the Normalizer.

Preliminary Procedure for Sync Separator Calibration

1. Refer to the instructions in the main portion of this manual and remove the front cover and cabinet from your Option 05 instrument.

2. Set the controls as stated under Preliminary Control Settings in this Option 05 description.

Table Option 5-1
TEST EQUIPMENT REQUIRED

Description	Minimum Specifications	Examples
Television Test Signal Generator	Composite Video Output with 525/60 and 1201/60 line and field rate; Output 350 mV to 1 V into 75 Ω termination.	Tektronix Part Number 067-0601-00 Calibration Fixture with 067-5002-00 (525/60) and 067-5010-00 (1201/60) plug-in units.
Test Oscilloscope with 10X probe	Bandwidth, dc to 20 MHz; minimum deflection factor, 5 mV/division at 20 MHz; Accuracy within 3%.	TEKTRONIX 465B Oscilloscope with included 10X probe.
Termination	Impedance, 75 Ω; Connectors, bnc.	Tektronix Part Number 011-0055-00.
Cable, Coaxial (two required)	Impedance, 75 Ω (not critical, 50 Ω may be substituted); length 42 inches; Connectors, bnc.	Tektronix Part Number 012-0074-00.
Input Normalizer	RC Time Constant, 24 pF times one MΩ (used during Vertical Input Compensation in main Performance Check and Calibration Procedure).	Tektronix Part Number 067-0539-00.

http://manoman.sqhill.com

3. Connect the Option 05 instrument to a power source within the range of its overall voltage and frequency specifications.

4. Refer to the Performance Temperature Specifications in the Performance Check or Calibration Procedure in the main portion of this manual.

5. Allow at least 20 minutes warm-up before proceeding.

Preliminary Control Settings for Option 05 Calibration

(unlisted controls may be left at any position)

Power Controls

Regulating Range Selector	At center of range of available power source.
Line Voltage Selector	As specified for available power source.
POWER	ON (pull)

CRT Controls

INTENSITY	Midrange (for viewable trace)
FOCUS	Midrange (for focused trace)
SCALE ILLUM	Midrange
BEAM FINDER	Out (off)

Vertical Controls

VERT MODE	CH 2
CH 2 VOLTS/DIV	.1 V
CH 2 Input Coupling	AC
INVERT	Out (Normal)
20 MHz BW LIMIT	Full bandwidth (button out)

Sweep Controls

HORIZ DISPLAY	A
A AND B TIME/DIV	20 μs

Triggering Controls

TRIG MODE	AUTO
A LEVEL	11 o'clock
B LEVEL	0 (12 o'clock)
A & B SLOPE	Minus (−)
A COUPLING	TV FIELD
B COUPLING	AC
A SOURCE	NORM
B SOURCE	TV LINE

Procedure

1. Clipping Level Adjustment (R2826 on Sync Separator Board)

a. Connect the Television Test Signal Generator (with the 525/60 067-5002-00 plug-in installed) Composite Video Output to the CH 2 input via a 75 Ω cable and 75 Ω termination.

b. Adjust the Average Picture Level fully counterclockwise and the Composite Video Amplitude for a 3 division display.

c. Set the CH 2 VOLTS/DIV to .5 V/DIV.

d. Adjust the Average Picture Level for a 2 division display. Set CH 2 VOLTS/DIV to 2.

e. Connect a 10X probe from the test oscilloscope (Vertical Volts/Div set for .2 V) to TP2865 (see Fig. Option 5-3).

f. Connect the generator rear panel Field Rate Trigger Output through a coaxial cable to the Test Oscilloscope External Trigger input. Set Test Oscilloscope Trigger Source to Ext, Time/Div to 1.0 ms, and Trigger Level for a stable triggered display.

g. ADJUST—R2826. Starting at the counterclockwise stop, adjust in a clockwise direction until the test oscilloscope display consists of a sequence of 6 narrow—6 wide—6 narrow pulses (for systems other than 525/60 the number and shape of pulses will differ). Adjust until top of displayed pulses are clean and free of any distortion (disregard bottom of pulses). Set Test Oscilloscope Volts/Div to .5 V.

h. Set the Option 05 instrument CH 2 VOLTS/DIV to .5, .2, and .1 (volts), and 50 mV/DIV, and check at each setting for a test oscilloscope display with top and bottom of waveform clean and free of distortion. If any distortion is noted, repeat parts a through h.

i. Switch the Option 05 A TRIGGER SLOPE to plus (+) and depress the INVERT button (in).

j. Repeat part h.

http://manoman.sqhill.com

k. Replace the Test Signal Generator 525/60 plug-in with the 067-5010-00 (1201/60) plug-in; set the Option 05 instrument A Trigger SLOPE to minus (−); release the INVERT button (out), and repeat parts h through j.

l. Disconnect the Test Oscilloscope probe and external trigger cable.

2. A and B Sweep TV Line Trigger Check

a. Replace the Television Test Signal Generator 1201/60 plug-in with the 525/60 plug-in.

b. Set the Option 05 instrument VOLTS/DIV to 1.0 V, the A TIME/DIV to 20 μs/Div, and the A TRIGGER COUPLING to TV LINE.

c. CHECK—That stable TV line triggering can be achieved by adjusting the A TRIGGER LEVEL control (disregard field pulses moving through the display).

d. Set the Option 05 instrument A Trigger COUPLING switch to TV FIELD. Set the A TIME/DIV to 2 ms, B TIME/DIV to 0.1 ms, and adjust the A TRIGGER LEVEL for a stable triggered display.

e. Depress the HORIZ DISPLAY A INTEN button and adjust the B TRIGGER LEVEL control to display the intensified portion of the trace.

f. Rotate the DELAY TIME POSITION dial to position the start of the intensified portion of the trace just to the left of the 2nd displayed field pulse.

g. Depress the HORIZ DISPLAY B DLY'D button and adjust the B TRIGGER LEVEL control for a stable display.

h. Rotate the DELAY TIME POSITION dial and check that a stable display can be obtained for any sync pulse that is positioned on top of the field pulse (display should jump from one sync pulse to the next as the DELAY TIME POSITION dial is rotated).

i. Disconnect the test equipment, remove the power plug from the power source, and replace the cabinet on the Option 05 instrument.

This completes the Calibration Procedure and check of the Option 05 portion of the instrument.

http://manoman.sqhill.com

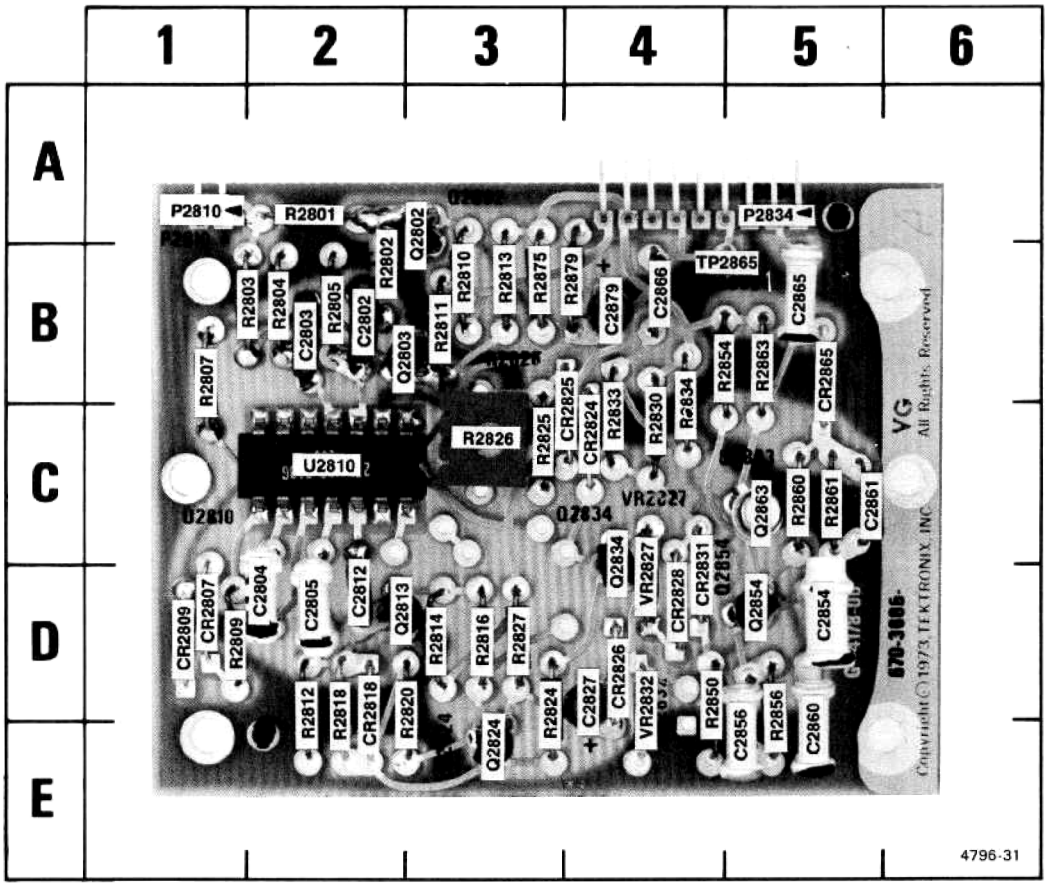

Fig. Option 5-3. A12—TV Sync Separator and Inverter Ampl board component locations.

CKT NO	GRID LOC	CKT NO	GRID LOC	CKT NO	GRID LOC	CKT NO	GRID LOC	CKT NO	GRID LOC	CKT NO	GRID LOC	CKT NO	GRID LOC
C2802	2B	C2861	5C	CR2825	4C	Q2824	3E	R2801	2A	R2812	2E	R2827	3D	R2863	5B
C2803	2B	C2865	5B	CR2826	4D	Q2834	4D	R2802	2B	R2813	3B	R2830	4C	R2875	3B
C2804	2D	C2866	4B	CR2828	4D	Q2854	5D	R2803	2B	R2814	3D	R2833	4C	R2879	4B
C2805	2D	C2879	4B	CR2831	4D	Q2863	5C	R2804	2B	R2816	3D	R2834	4C	TP2865	5B
C2812	2D			CR2865	5B			R2805	2B	R2818	2E	R2850	4D		
C2827	4D	CR2807	1D			P2810	1A	R2807	1B	R2820	3E	R2854	5B	U2810	2C
C2854	5D	CR2809	1D	Q2802	3A	P2834	4A	R2809	1D	R2824	3E	R2856	5E		
C2856	5E	CR2818	2E	Q2803	3B	P2833	4C	R2810	3B	R2825	3C	R2860	5C	VR2827	4D
C2860	5E	CR2824	4C	Q2813	3D	P2863	1A	R2811	3B	R2826	3C	R2861	5C	VR2832	4D

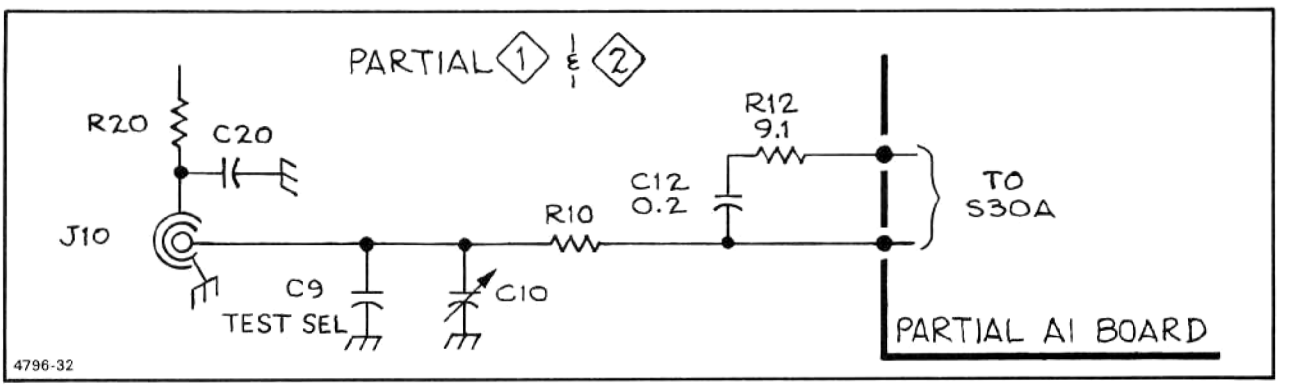

Fig. Option 5-4. Option 05 Vertical Input changes.

http://manoman.sqhill.com

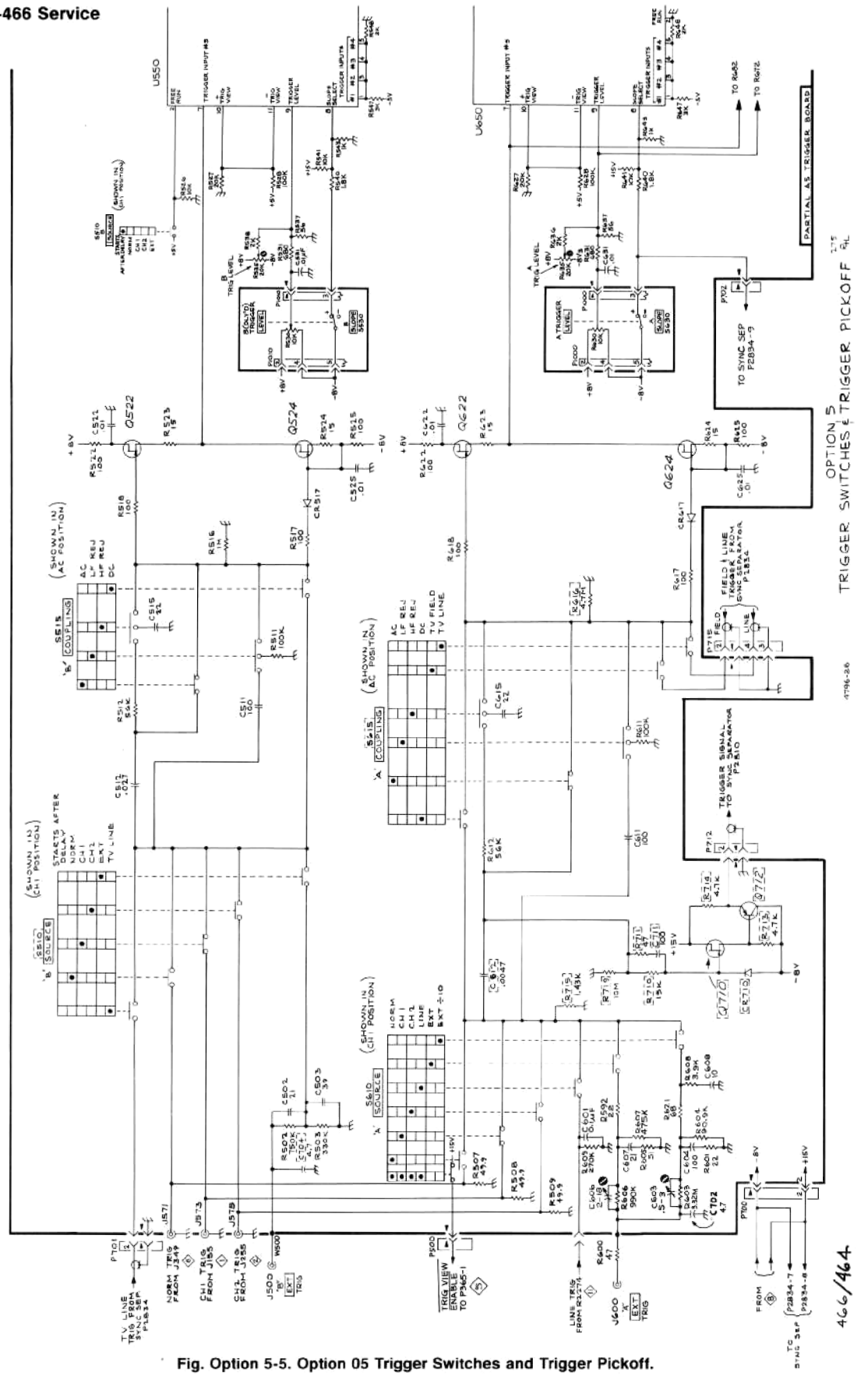

Fig. Option 5-5. Option 05 Trigger Switches and Trigger Pickoff.

http://manoman.sqhill.com

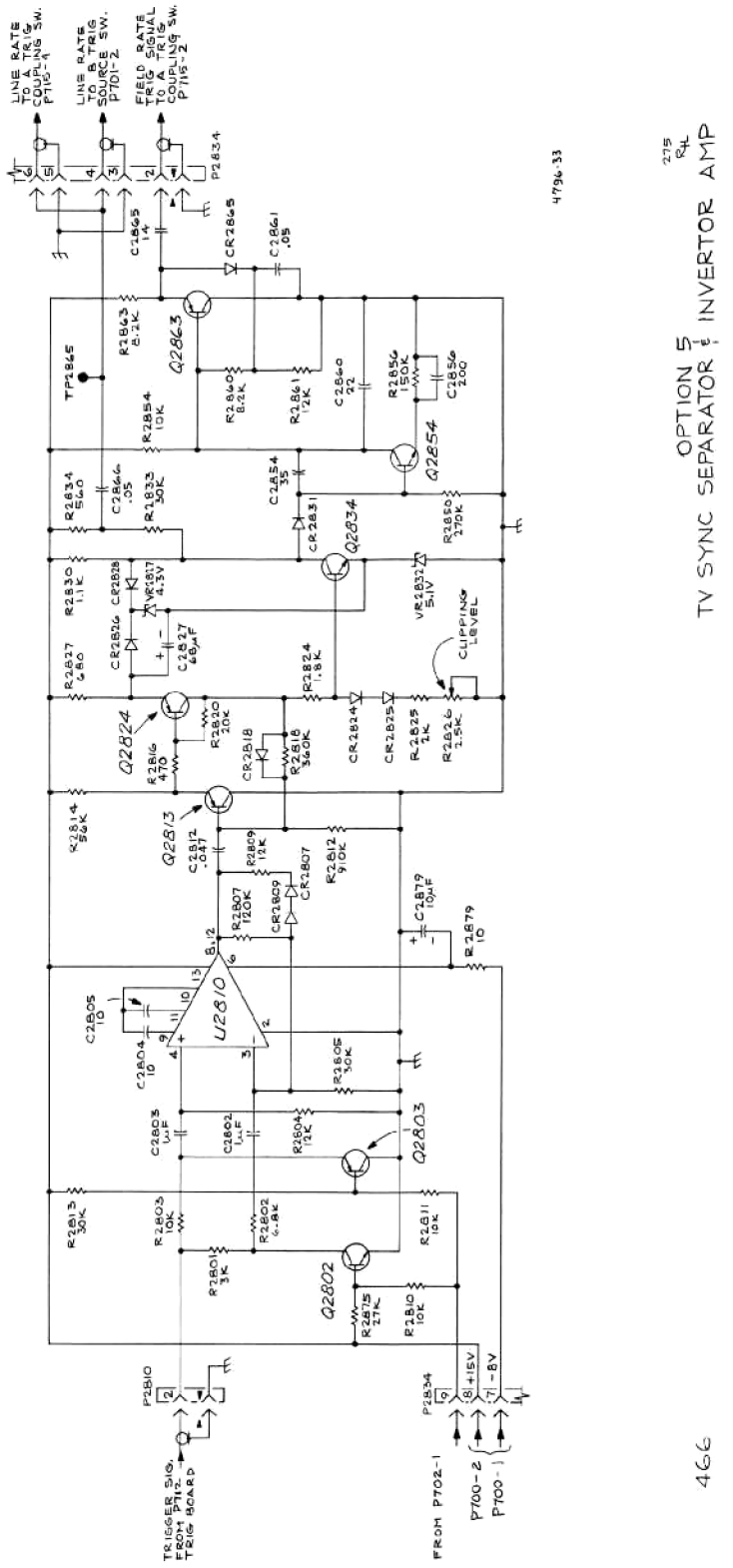

Fig. Option 5-6. Option 05 TV Sync Separator and Inverter Amplifier.

http://manoman.sqhill.com

Component No.	Tektronix Part No.	Serial/Model No. Eff	Dscont	Name & Description	Mfr Code	Mfr Part Number
				REPLACEABLE ELECTRICAL PARTS OPTION 05		
	672-0554-02			CKT BOARD ASSY:ATTENUATOR	80009	672-0554-02
A1	670-3254-02			CKT BOARD ASSY:ATTENUATOR	80009	670-3254-02
A1C9	281-0661-00			CAP.,FXD,CER DI:0.8PF,+/-0.1PF,500V	04222	7001-COK-OR8B
				(USE AS NEEDED)		
A1R12	307-0116-00			RES.,FXD,CMPSN:9.1 OHM,5%,0.25W	01121	CB91G5
A5	670-6293-03			CKT BOARD ASSY:TRIGGER GEN & SWEEP LOGIC	80009	670-6293-03
A5C502	281-0579-00			CAP.,FXD,CER DI:21PF,5%,500V	04222	7001-NPO-210J
A5C503	281-0603-00			CAP.,FXD,CER DI:39PF,5%,500V	59660	0301080C0G0390
A5C511	281-0814-00			CAP.,FXD,CER DI:100PF,10%,100V	04222	GC101A101K
A5C512	281-0815-00			CAP.,FXD,CER DI:0.027UF,20%,50V	72982	8005D9AABW5R27
A5C515	281-0759-00			CAP.,FXD,CER DI:22PF,10%,100V	96733	R2735
A5C522	281-0773-00			CAP.,FXD,CER DI:0.1UF,20%,50V	04222	MA205E104MAA
A5C525	281-0773-00			CAP.,FXD,CER DI:0.1UF,20%,50V	04222	MA205E104MAA
A5C531	281-0773-00			CAP.,FXD,CER DI:0.1UF,20%,50V	04222	MA205E104MAA
A5C554	281-0775-00			CAP.,FXD,CER DI:0.1UF,20%,50V	04222	MA205E104MAA
A5C582	290-0808-00			CAP.,FXD,ELCTLT:2.7UF,10%,20V	05397	T3228275K020AS
A5C583	290-0808-00			CAP.,FXD,ELCTLT:2.7UF,10%,20V	05397	T3228275K020AS
A5C584	290-0808-00			CAP.,FXD,ELCTLT:2.7UF,10%,20V	05397	T3228275K020AS
A5C585	290-0808-00			CAP.,FXD,ELCTLT:2.7UF,10%,20V	05397	T3228275K020AS
A5C600	290-0808-00			CAP.,FXD,ELCTLT:2.7UF,10%,20V	05397	T3228275K020AS
A5C601	281-0775-00			CAP.,FXD,CER DI:0.1UF,20%,50V	04222	MA205E104MAA
A5C603	281-0217-00			CAP.,VAR,CER DI:0.5-3.5PF,400V	52763	311908141
A5C604	281-0814-00			CAP.,FXD,CER DI:100PF,10%,100V	04222	GC101A101K
A5C606	281-0207-00			CAP.,VAR,PLSTC:2-18PF,100V	80031	2807C00218MH02F
A5C607	281-0579-00			CAP.,FXD,CER DI:21PF,5%,500V	04222	7001-NPO-210J
A5C608	281-0757-00			CAP.,FXD,CER DI:10PF,20%,100V	72982	8035-D-COG-100G
A5C611	281-0814-00			CAP.,FXD,CER DI:100PF,10%,100V	04222	GC101A101K
A5C612	281-0815-00			CAP.,FXD,CER DI:0.027UF,20%,50V	72982	8005D9AABW5R27
A5C612	281-0772-00			CAP.,FXD,CER DI:0.0047UF,10%,100V	04222	GC701C472K
A5C615	281-0759-00			CAP.,FXD,CER DI:22PF,10%,100V	96733	R2735
A5C622	281-0773-00			CAP.,FXD,CER DI:0.1UF,20%,50V	04222	MA205E104MAA
A5C625	281-0773-00			CAP.,FXD,CER DI:0.1UF,20%,50V	04222	MA205E104MAA
A5C631	281-0773-00			CAP.,FXD,CER DI:0.1UF,20%,50V	04222	MA205E104MAA
A5C650	281-0775-00			CAP.,FXD,CER DI:0.1UF,20%,50V	04222	MA205E104MAA
A5C652	281-0775-00			CAP.,FXD,CER DI:0.1UF,20%,50V	04222	MA205E104MAA
A5C654	281-0775-00			CAP.,FXD,CER DI:0.1UF,20%,50V	04222	MA205E104MAA
A5C654	281-0775-00			CAP.,FXD,CER DI:0.1UF,20%,50V	04222	MA205E104MAA
A5C655	290-0808-00			CAP.,FXD,ELCTLT:2.7UF,10%,20V	05397	T3228275K020AS
A5C673	281-0763-00			CAP.,FXD,CER DI:47PF,10%,100V	04222	GA101A470KAA
A5C676	281-0161-00			CAP.,VAR,CER DI:5-15PF,350V	59660	518-000A5-15
A5C684	281-0775-00			CAP.,FXD,CER DI:0.1UF,20%,50V	04222	MA205E104MAA
A5C685	281-0812-00			CAP.,FXD,CER DI:1000PF,10%,100V	04222	MA101C102KAA
A5C693	290-0808-00			CAP.,FXD,ELCTLT:2.7UF,10%,20V	05397	T3228275K020AS
A5C702	281-0592-00			CAP.,FXD,CER DI:4.7PF,+/-0.5PF,500V	59660	0301080COH0479 D
A5C704	281-0592-00			CAP.,FXD,CER DI:4.7PF,+/-0.5PF,500V	59660	0301080COH0479 D
A5C711	281-0814-00			CAP.,FXD,CER DI:100PF,10%,100V	04222	GC101A101K
A5C874	281-0759-00			CAP.,FXD,CER DI:22PF,10%,100V	96733	R2735
A5C882	281-0759-00			CAP.,FXD,CER DI:22PF,10%,100V	96733	R2735
A5C885	290-0943-00			CAP.,FXD,ELCTLT:47UF,+50-10%,25V	55680	ULB1E470TECANA
A5C908	281-0814-00			CAP.,FXD,CER DI:100PF,10%,100V	04222	GC101A101K
A5C919	281-0786-00			CAP.,FXD,CER DI:150PF,10%,100V	04222	MA106A569D
A5C922	281-0756-00			CAP.,FXD,CER DI:2.2PF,0.5%,200V	12969	CGB2R2DFN
A5C925	281-0759-00			CAP.,FXD,CER DI:22PF,10%,100V	96733	R2735
A5C942	290-0808-00			CAP.,FXD,ELCTLT:2.7UF,10%,20V	05397	T3228275K020AS
A5C943	281-0797-00			CAP.,FXD,CER DI:15PF,10%,100V	72982	8035D9AADC0G150
A5C944	290-0183-00			CAP.,FXD,ELCTLT:1UF,10%,35V	90201	TAC105K035P02

http://manoman.sqhill.com

Component No.	Tektronix Part No.	Serial/Model No. Eff	Dscont	Name & Description	Mfr Code	Mfr Part Number
A5C945	281-0786-00			CAP.,FXD,CER DI:150PF,10%,100V	04222	MA106A569D
A5C947	281-0791-00			CAP.,FXD,CER DI:270PF,10%,100V	04222	MA101A271KAA
A5C965	290-0808-00			CAP.,FXD,ELCTLT:2.7UF,10%,20V	05397	T3228275K020AS
A5C967	290-0808-00			CAP.,FXD,ELCTLT:2.7UF,10%,20V	05397	T3228275K020AS
A5C968	290-0808-00			CAP.,FXD,ELCTLT:2.7UF,10%,20V	05397	T3228275K020AS
A5C986	290-0536-00			CAP.,FXD,ELCTLT:10UF,20%,25V	90201	TDC106M025FL
A5C992	281-0775-00			CAP.,FXD,CER DI:0.1UF,20%,50V	04222	MA205E104MAA
A5C993	281-0775-00			CAP.,FXD,CER DI:0.1UF,20%,50V	04222	MA205E104MAA
A5C994	281-0775-00			CAP.,FXD,CER DI:0.1UF,20%,50V	04222	MA205E104MAA
A5CR517	152-0246-00			SEMICOND DEVICE:SW,SI,40V,200MA	03508	DE140
A5CR617	152-0246-00			SEMICOND DEVICE:SW,SI,40V,200MA	03508	DE140
A5CR674	152-0141-02			SEMICOND DVC,DI:SW,SI,30V,150MA,30V,DO-35	01295	1N4152R
A5CR684	152-0141-02			SEMICOND DVC,DI:SW,SI,30V,150MA,30V,DO-35	01295	1N4152R
A5CR710	152-0246-00			SEMICOND DEVICE:SW,SI,40V,200MA	03508	DE140
A5CR821	152-0141-02			SEMICOND DVC,DI:SW,SI,30V,150MA,30V,DO-35	01295	1N4152R
A5CR822	152-0141-02			SEMICOND DVC,DI:SW,SI,30V,150MA,30V,DO-35	01295	1N4152R
A5CR823	152-0141-02			SEMICOND DVC,DI:SW,SI,30V,150MA,30V,DO-35	01295	1N4152R
A5CR824	152-0141-02			SEMICOND DVC,DI:SW,SI,30V,150MA,30V,DO-35	01295	1N4152R
A5CR834	152-0141-02			SEMICOND DVC,DI:SW,SI,30V,150MA,30V,DO-35	01295	1N4152R
A5CR851	152-0141-02			SEMICOND DVC,DI:SW,SI,30V,150MA,30V,DO-35	01295	1N4152R
A5CR852	152-0141-02			SEMICOND DVC,DI:SW,SI,30V,150MA,30V,DO-35	01295	1N4152R
A5CR853	152-0141-02			SEMICOND DVC,DI:SW,SI,30V,150MA,30V,DO-35	01295	1N4152R
A5CR857	152-0141-02			SEMICOND DVC,DI:SW,SI,30V,150MA,30V,DO-35	01295	1N4152R
A5CR858	152-0141-02			SEMICOND DVC,DI:SW,SI,30V,150MA,30V,DO-35	01295	1N4152R
A5CR865	152-0141-02			SEMICOND DVC,DI:SW,SI,30V,150MA,30V,DO-35	01295	1N4152R
A5CR874	152-0141-02			SEMICOND DVC,DI:SW,SI,30V,150MA,30V,DO-35	01295	1N4152R
A5CR882	152-0141-02			SEMICOND DVC,DI:SW,SI,30V,150MA,30V,DO-35	01295	1N4152R
A5CR884	152-0141-02			SEMICOND DVC,DI:SW,SI,30V,150MA,30V,DO-35	01295	1N4152R
A5CR885	152-0141-02			SEMICOND DVC,DI:SW,SI,30V,150MA,30V,DO-35	01295	1N4152R
A5CR887	152-0141-02			SEMICOND DVC,DI:SW,SI,30V,150MA,30V,DO-35	01295	1N4152R
A5CR888	152-0141-02			SEMICOND DVC,DI:SW,SI,30V,150MA,30V,DO-35	01295	1N4152R
A5CR892	152-0141-02			SEMICOND DVC,DI:SW,SI,30V,150MA,30V,DO-35	01295	1N4152R
A5CR893	152-0141-02			SEMICOND DVC,DI:SW,SI,30V,150MA,30V,DO-35	01295	1N4152R
A5CR894	152-0141-02			SEMICOND DVC,DI:SW,SI,30V,150MA,30V,DO-35	01295	1N4152R
A5CR908	152-0141-02			SEMICOND DVC,DI:SW,SI,30V,150MA,30V,DO-35	01295	1N4152R
A5CR914	152-0141-02			SEMICOND DVC,DI:SW,SI,30V,150MA,30V,DO-35	01295	1N4152R
A5CR916	152-0141-02			SEMICOND DVC,DI:SW,SI,30V,150MA,30V,DO-35	01295	1N4152R
A5CR917	152-0141-02			SEMICOND DVC,DI:SW,SI,30V,150MA,30V,DO-35	01295	1N4152R
A5CR943	152-0141-02			SEMICOND DVC,DI:SW,SI,30V,150MA,30V,DO-35	01295	1N4152R
A5CR945	152-0141-02			SEMICOND DVC,DI:SW,SI,30V,150MA,30V,DO-35	01295	1N4152R
A5CR946	152-0141-02			SEMICOND DVC,DI:SW,SI,30V,150MA,30V,DO-35	01295	1N4152R
A5CR948	152-0333-00			SEMICOND DEVICE:SILICON,55V,200MA	07263	FDH-6012
A5CR949	152-0141-02			SEMICOND DVC,DI:SW,SI,30V,150MA,30V,DO-35	01295	1N4152R
A5CR961	152-0141-02			SEMICOND DVC,DI:SW,SI,30V,150MA,30V,DO-35	01295	1N4152R
A5CR962	152-0141-02			SEMICOND DVC,DI:SW,SI,30V,150MA,30V,DO-35	01295	1N4152R
A5J571	131-1003-00			CONN,RCPT,ELEC:CKT BD MT,3 PRONG	80009	131-1003-00
A5J573	131-1003-00			CONN,RCPT,ELEC:CKT BD MT,3 PRONG	80009	131-1003-00
A5J575	131-1003-00			CONN,RCPT,ELEC:CKT BD MT,3 PRONG	80009	131-1003-00
A5J678	131-1003-00			CONN,RCPT,ELEC:CKT BD MT,3 PRONG	80009	131-1003-00
A5J688	131-1003-00			CONN,RCPT,ELEC:CKT BD MT,3 PRONG	80009	131-1003-00
A5J858	131-1003-00			CONN,RCPT,ELEC:CKT BD MT,3 PRONG	80009	131-1003-00
A5J917	131-1003-00			CONN,RCPT,ELEC:CKT BD MT,3 PRONG	80009	131-1003-00
A5J919	131-1003-00			CONN,RCPT,ELEC:CKT BD MT,3 PRONG	80009	131-1003-00
A5L582	108-0538-00			COIL,RF:FIXED,2.7UH	76493	JWM#B7059
A5L584	108-0538-00			COIL,RF:FIXED,2.7UH	76493	JWM#B7059
A5L585	108-0538-00			COIL,RF:FIXED,2.7UH	76493	JWM#B7059
A5L676	108-0260-00			COIL,RF:98NH	80009	108-0260-00
A5L942	108-0538-00			COIL,RF:FIXED,2.7UH	76493	JWM#B7059

http://manoman.sqhill.com

Component No.	Tektronix Part No.	Serial/Model No. Eff	Dscont	Name & Description	Mfr Code	Mfr Part Number
A5P700	131-0608-00			TERMINAL,PIN:0.365 L X 0.025 PH BRZ GOLD	22526	48283-036
A5P701	131-0608-00			TERMINAL,PIN:0.365 L X 0.025 PH BRZ GOLD	22526	48283-036
A5P702	131-0608-00			TERMINAL,PIN:0.365 L X 0.025 PH BRZ GOLD	22526	48283-036
A5P712	131-0608-00			TERMINAL,PIN:0.365 L X 0.025 PH BRZ GOLD	22526	48283-036
A5P715	131-0608-00			TERMINAL,PIN:0.365 L X 0.025 PH BRZ GOLD	22526	48283-036
A5Q522	151-1042-00			SEMICOND DVC SE:MATCHED PAIR FET	22229	S2089
A5Q524	151-1042-00			SEMICOND DVC SE:MATCHED PAIR FET	22229	S2089
A5Q622	151-1042-00			SEMICOND DVC SE:MATCHED PAIR FET	22229	S2089
A5Q624	151-1042-00			SEMICOND DVC SE:MATCHED PAIR FET	22229	S2089
A5Q672	151-0367-00			TRANSISTOR:SILICON,NPN,SEL FROM 3571TP	04713	SPS 8811
A5Q682	151-0367-00			TRANSISTOR:SILICON,NPN,SEL FROM 3571TP	04713	SPS 8811
A5Q710	151-1005-00			TRANSISTOR:SILICON,JFE,N-CHANNEL	27014	F55037
A5Q712	151-0220-03			TRANSISTOR:SILICON,PNP,SEL	04713	SPS6915
A5Q820	151-0232-00			TRANSISTOR:SILICON,NPN,DUAL	07263	SP12141
A5Q822	151-0190-00			TRANSISTOR:NPN,SI,TO-92	04713	SPS7969
A5Q824	151-0220-00			TRANSISTOR:PNP,SI,TO-92	07263	S036228
A5Q834	151-0220-00			TRANSISTOR:PNP,SI,TO-92	07263	S036228
A5Q844	151-0190-00			TRANSISTOR:NPN,SI,TO-92	04713	SPS7969
A5Q852	151-0190-00			TRANSISTOR:NPN,SI,TO-92	04713	SPS7969
A5Q854	151-0190-00			TRANSISTOR:NPN,SI,TO-92	04713	SPS7969
A5Q856	151-0220-00			TRANSISTOR:PNP,SI,TO-92	07263	S036228
A5Q864	151-0220-03			TRANSISTOR:SILICON,PNP,SEL	04713	SPS6915
A5Q866	151-0220-03			TRANSISTOR:SILICON,PNP,SEL	04713	SPS6915
A5Q872	151-0220-00			TRANSISTOR:PNP,SI,TO-92	07263	S036228
A5Q874	151-0220-00			TRANSISTOR:PNP,SI,TO-92	07263	S036228
A5Q882	151-0190-00			TRANSISTOR:NPN,SI,TO-92	04713	SPS7969
A5Q884	151-0220-03			TRANSISTOR:SILICON,PNP,SEL	04713	SPS6915
A5Q904	151-0220-03			TRANSISTOR:SILICON,PNP,SEL	04713	SPS6915
A5Q906	151-0220-03			TRANSISTOR:SILICON,PNP,SEL	04713	SPS6915
A5Q912	151-0190-00			TRANSISTOR:NPN,SI,TO-92	04713	SPS7969
A5Q914	151-0190-00			TRANSISTOR:NPN,SI,TO-92	04713	SPS7969
A5Q916	151-0220-00			TRANSISTOR:PNP,SI,TO-92	07263	S036228
A5Q919	151-0190-00			TRANSISTOR:NPN,SI,TO-92	04713	SPS7969
A5Q924	151-0220-03			TRANSISTOR:SILICON,PNP,SEL	04713	SPS6915
A5Q926	151-0220-03			TRANSISTOR:SILICON,PNP,SEL	04713	SPS6915
A5Q954	151-0190-00			TRANSISTOR:NPN,SI,TO-92	04713	SPS7969
A5Q962	151-0190-00			TRANSISTOR:NPN,SI,TO-92	04713	SPS7969
A5Q964	151-0190-00			TRANSISTOR:NPN,SI,TO-92	04713	SPS7969
A5Q982	151-0190-00			TRANSISTOR:NPN,SI,TO-92	04713	SPS7969
A5Q986	151-0188-00			TRANSISTOR:PNP,SI,TO-92	T0058	2N3906
A5R502	315-0754-00			RES.,FXD,CMPSN:750K OHM,5%,0.25W	01121	CB7545
A5R503	315-0334-00			RES.,FXD,CMPSN:330K OHM,5%,0.25W	01121	CB3345
A5R507	321-0068-00			RES.,FXD,FILM:49.9 OHM,1%,0.125W	91637	MFF1816G49R90F
A5R508	321-0068-00			RES.,FXD,FILM:49.9 OHM,1%,0.125W	91637	MFF1816G49R90F
A5R509	321-0068-00			RES.,FXD,FILM:49.9 OHM,1%,0.125W	91637	MFF1816G49R90F
A5R511	315-0104-00			RES.,FXD,CMPSN:100K OHM,5%,0.25W	01121	CB1045
A5R512	315-0563-00			RES.,FXD,CMPSN:56K OHM,5%,0.25W	01121	CB5635
A5R516	321-0481-00			RES.,FXD,FILM:1M OHM,1%,0.125W	91637	CMF55116G10003F
A5R517	315-0101-00			RES.,FXD,CMPSN:100 OHM,5%,0.25W	01121	CB1015
A5R518	315-0101-00			RES.,FXD,CMPSN:100 OHM,5%,0.25W	01121	CB1015
A5R522	315-0101-00			RES.,FXD,CMPSN:100 OHM,5%,0.25W	01121	CB1015
A5R523	315-0150-00			RES.,FXD,CMPSN:15 OHM,5%,0.25W	01121	CB1505
A5R524	315-0150-00			RES.,FXD,CMPSN:15 OHM,5%,0.25W	01121	CB1505
A5R525	315-0101-00			RES.,FXD,CMPSN:100 OHM,5%,0.25W	01121	CB1015
A5R526	315-0103-00			RES.,FXD,CMPSN:10K OHM,5%,0.25W	01121	CB1035
A5R527	315-0203-00			RES.,FXD,CMPSN:20K OHM,5%,0.25W	01121	CB2035
A5R528	315-0104-00			RES.,FXD,CMPSN:100K OHM,5%,0.25W	01121	CB1045
A5R530	311-1647-00			RES.,VAR,NONWIR:PNL,10K OHM,1W,W/SW	12697	381-CM40354

http://manoman.sqhill.com

Component No.	Tektronix Part No.	Serial/Model No. Eff	Dscont	Name & Description	Mfr Code	Mfr Part Number
A5R531	315-0681-00			RES.,FXD,CMPSN:680 OHM,5%,0.25W	01121	CB6815
A5R535	311-1558-00			RES.,VAR,NONWIR:20K OHM,20%,0.50W	73138	91-80-0
A5R536	315-0202-00			RES.,FXD,CMPSN:2K OHM,5%,0.25W	01121	CB2025
A5R537	315-0560-00			RES.,FXD,CMPSN:56 OHM,5%,0.25W	01121	CB5605
A5R540	315-0182-00			RES.,FXD,CMPSN:1.8K OHM,5%,0.25W	01121	CB1825
A5R541	315-0103-00			RES.,FXD,CMPSN:10K OHM,5%,0.25W	01121	CB1035
A5R543	315-0102-00			RES.,FXD,CMPSN:1K OHM,5%,0.25W	01121	CB1025
A5R545	307-0113-00			RES.,FXD,CMPSN:5.1 OHM,5%,0.25W	01121	CB51G5
A5R547	315-0302-00			RES.,FXD,CMPSN:3K OHM,5%,0.25W	01121	CB3025
A5R548	315-0202-00			RES.,FXD,CMPSN:2K OHM,5%,0.25W	01121	CB2025
A5R550	315-0100-00			RES.,FXD,CMPSN:10 OHM,5%,0.25W	01121	CB1005
A5R551	315-0152-00			RES.,FXD,CMPSN:1.5K OHM,5%,0.25W	01121	CB1525
A5R553	315-0472-00			RES.,FXD,CMPSN:4.7K OHM,5%,0.25W	01121	CB4725
A5R554	311-1560-00			RES.,VAR,NONWIR:5K OHM,20%,0.50W	73138	91-82-0
A5R555	311-1558-00			RES.,VAR,NONWIR:20K OHM,20%,0.50W	73138	91-80-0
A5R592	315-0220-00			RES.,FXD,CMPSN:22 OHM,5%,0.25W	01121	CB2205
A5R600	315-0470-00			RES.,FXD,CMPSN:47 OHM,5%,0.25W	01121	CB4705
A5R601	315-0220-00			RES.,FXD,CMPSN:22 OHM,5%,0.25W	01121	CB2205
A5R603	325-0245-00			RES.,FXD,FILM:3.32M OHM,1%,0.125W	91637	CMF55116G33203F
A5R604	321-0381-00			RES.,FXD,FILM:90.9K OHM,1%,0.125W	91637	MFF1816G90901F
A5R605	315-0510-00			RES.,FXD,CMPSN:51 OHM,5%,0.25W	01121	CB5105
A5R606	321-0790-00			RES.,FXD,FILM:990K OHM,1%,0.125W	14298	AME55D9903F
A5R607	321-0450-00			RES.,FXD,FILM:475K OHM,1%,0.125W	91637	CMF55116G47502F
A5R608	315-0392-00			RES.,FXD,CMPSN:3.9K OHM,5%,0.25W	01121	CB3925
A5R609	315-0274-00			RES.,FXD,CMPSN:270K OHM,5%,0.25W	01121	CB2745
A5R611	315-0104-00			RES.,FXD,CMPSN:100K OHM,5%,0.25W	01121	CB1045
A5R612	315-0563-00			RES.,FXD,CMPSN:56K OHM,5%,0.25W	01121	CB5635
A5R616	321-0481-00			RES.,FXD,FILM:1M OHM,1%,0.125W	91637	CMF55116G10003F
A5R616	315-0475-00			RES.,FXD,CMPSN:4.7M OHM,5%,0.25W	01121	CB4755
A5R617	315-0101-00			RES.,FXD,CMPSN:100 OHM,5%,0.25W	01121	CB1015
A5R618	315-0101-00			RES.,FXD,CMPSN:100 OHM,5%,0.25W	01121	CB1015
A5R621	315-0680-00			RES.,FXD,CMPSN:68 OHM,5%,0.25W	01121	CB6805
A5R622	315-0101-00			RES.,FXD,CMPSN:100 OHM,5%,0.25W	01121	CB1015
A5R623	315-0150-00			RES.,FXD,CMPSN:15 OHM,5%,0.25W	01121	CB1505
A5R624	315-0150-00			RES.,FXD,CMPSN:15 OHM,5%,0.25W	01121	CB1505
A5R625	315-0101-00			RES.,FXD,CMPSN:100 OHM,5%,0.25W	01121	CB1015
A5R627	315-0203-00			RES.,FXD,CMPSN:20K OHM,5%,0.25W	01121	CB2035
A5R628	315-0104-00			RES.,FXD,CMPSN:100K OHM,5%,0.25W	01121	CB1045
A5R630	311-1647-00			RES.,VAR,NONWIR:PNL,10K OHM,1W,W/SW	12697	381-CM40354
A5R631	315-0681-00			RES.,FXD,CMPSN:680 OHM,5%,0.25W	01121	CB6815
A5R635	311-1558-00			RES.,VAR,NONWIR:20K OHM,20%,0.50W	73138	91-80-0
A5R636	315-0202-00			RES.,FXD,CMPSN:2K OHM,5%,0.25W	01121	CB2025
A5R637	315-0560-00			RES.,FXD,CMPSN:56 OHM,5%,0.25W	01121	CB5605
A5R640	315-0182-00			RES.,FXD,CMPSN:1.8K OHM,5%,0.25W	01121	CB1825
A5R641	315-0103-00			RES.,FXD,CMPSN:10K OHM,5%,0.25W	01121	CB1035
A5R643	315-0102-00			RES.,FXD,CMPSN:1K OHM,5%,0.25W	01121	CB1025
A5R645	307-0113-00			RES.,FXD,CMPSN:5.1 OHM,5%,0.25W	01121	CB51G5
A5R647	315-0302-00			RES.,FXD,CMPSN:3K OHM,5%,0.25W	01121	CB3025
A5R648	315-0202-00			RES.,FXD,CMPSN:2K OHM,5%,0.25W	01121	CB2025
A5R650	315-0100-00			RES.,FXD,CMPSN:10 OHM,5%,0.25W	01121	CB1005
A5R651	315-0152-00			RES.,FXD,CMPSN:1.5K OHM,5%,0.25W	01121	CB1525
A5R653	315-0472-00			RES.,FXD,CMPSN:4.7K OHM,5%,0.25W	01121	CB4725
A5R654	311-1560-00			RES.,VAR,NONWIR:5K OHM,20%,0.50W	73138	91-82-0
A5R655	311-1558-00			RES.,VAR,NONWIR:20K OHM,20%,0.50W	73138	91-80-0
A5R672	315-0270-00			RES.,FXD,CMPSN:27 OHM,5%,0.25W	01121	CB2705
A5R673	311-1260-00			RES.,VAR,NONWIR:250 OHM,10%,0.50W	32997	3329P-L58-251
A5R674	321-0198-00			RES.,FXD,FILM:1.13K OHM,1%,0.125W	91637	MFF1816G11300F
A5R675	311-1566-00			RES.,VAR,NONWIR:200 OHM,20%,0.50W	73138	91-88-0
A5R676	311-1260-00			RES.,VAR,NONWIR:250 OHM,10%,0.50W	32997	3329P-L58-251
A5R678	315-0430-00			RES.,FXD,CMPSN:43 OHM,5%,0.25W	01121	CB4305

http://manoman.sqhill.com

Component No.	Tektronix Part No.	Serial/Model No. Eff	Dscont	Name & Description	Mfr Code	Mfr Part Number
A5R679	311-1567-00			RES.,VAR,NONWIR:TRMR,100 OHM,0.50W	73138	91-89-0
A5R682	315-0270-00			RES.,FXD,CMPSN:27 OHM,5%,0.25W	01121	CB2705
A5R684	321-0198-00			RES.,FXD,FILM:1.13K OHM,1%,0.125W	91637	MFF1816G11300F
A5R685	315-0124-00			RES.,FXD,CMPSN:120K OHM,5%,0.25W	01121	CB1245
A5R688	315-0430-00			RES.,FXD,CMPSN:43 OHM,5%,0.25W	01121	CB4305
A5R689	315-0220-00			RES.,FXD,CMPSN:22 OHM,5%,0.25W	01121	CB2205
A5R693	315-0100-00			RES.,FXD,CMPSN:10 OHM,5%,0.25W	01121	CB1005
A5R694	321-0175-00			RES.,FXD,FILM:649 OHM,1%,0.125W	91637	CMF55116G649R0F
A5R710	315-0153-00			RES.,FXD,CMPSN:15K OHM,5%,0.25W	01121	CB1535
A5R711	315-0470-00			RES.,FXD,CMPSN:47 OHM,5%,0.25W	01121	CB4705
A5R713	315-0472-00			RES.,FXD,CMPSN:4.7K OHM,5%,0.25W	01121	CB4725
A5R714	315-0472-00			RES.,FXD,CMPSN:4.7K OHM,5%,0.25W	01121	CB4725
A5R715	321-0496-00			RES.,FXD,FILM:1.43M OHM,1%,0.125W	91637	HFF1813G14303F
A5R719	315-0106-00			RES.,FXD,CMPSN:10M OHM,5%,0.25W	01121	CB1065
A5R822	315-0101-00			RES.,FXD,CMPSN:100 OHM,5%,0.25W	01121	CB1015
A5R823	321-0227-00			RES.,FXD,FILM:2.26K OHM,1%,0.125W	91637	MFF1816G22600F
A5R824	315-0431-00			RES.,FXD,CMPSN:430 OHM,5%,0.25W	01121	CB4315
A5R825	315-0104-00			RES.,FXD,CMPSN:100K OHM,5%,0.25W	01121	CB1045
A5R826	315-0202-00			RES.,FXD,CMPSN:2K OHM,5%,0.25W	01121	CB2025
A5R827	315-0101-00			RES.,FXD,CMPSN:100 OHM,5%,0.25W	01121	CB1015
A5R832	301-0822-00			RES.,FXD,CMPSN:8.2K OHM,5%,0.50W	01121	EB8225
A5R833	315-0104-00			RES.,FXD,CMPSN:100K OHM,5%,0.25W	01121	CB1045
A5R834	315-0241-00			RES.,FXD,CMPSN:240 OHM,5%,0.25W	01121	CB2415
A5R836	315-0112-00			RES.,FXD,CMPSN:1.1K OHM,5%,0.25W	01121	CB1125
A5R837	315-0123-00			RES.,FXD,CMPSN:12K OHM,5%,0.25W	01121	CB1235
A5R842	315-0182-00			RES.,FXD,CMPSN:1.8K OHM,5%,0.25W	01121	CB1825
A5R843	315-0270-00			RES.,FXD,CMPSN:27 OHM,5%,0.25W	01121	CB2705
A5R844	315-0102-00			RES.,FXD,CMPSN:1K OHM,5%,0.25W	01121	CB1025
A5R851	315-0112-00			RES.,FXD,CMPSN:1.1K OHM,5%,0.25W	01121	CB1125
A5R852	321-0209-00			RES.,FXD,FILM:1.47K OHM,1%,0.125W	91637	MFF1816G14700F
A5R853	315-0472-00			RES.,FXD,CMPSN:4.7K OHM,5%,0.25W	01121	CB4725
A5R854	321-0160-00			RES.,FXD,FILM:453 OHM,1%,0.125W	91637	MFF1816G453R0F
A5R855	315-0221-00			RES.,FXD,CMPSN:220 OHM,5%,0.25W	01121	CB2215
A5R856	321-0160-00			RES.,FXD,FILM:453 OHM,1%,0.125W	91637	MFF1816G453R0F
A5R857	315-0911-00			RES.,FXD,CMPSN:910 OHM,5%,0.25W	01121	CB9115
A5R858	301-0471-00			RES.,FXD,CMPSN:470 OHM,5%,0.5W	01121	EB4715
A5R861	315-0272-00			RES.,FXD,CMPSN:2.7K OHM,5%,0.25W	01121	CB2725
A5R862	315-0390-00			RES.,FXD,CMPSN:39 OHM,5%,0.25W	01121	CB3905
A5R863	321-0189-00			RES.,FXD,FILM:909 OHM,1%,0.125W	91637	MFF1816G909R0F
A5R864	315-0681-00			RES.,FXD,CMPSN:680 OHM,5%,0.25W	01121	CB6815
A5R865	315-0681-00			RES.,FXD,CMPSN:680 OHM,5%,0.25W	01121	CB6815
A5R866	315-0301-00			RES.,FXD,CMPSN:300 OHM,5%,0.25W	01121	CB3015
A5R867	315-0681-00			RES.,FXD,CMPSN:680 OHM,5%,0.25W	01121	CB6815
A5R872	315-0103-00			RES.,FXD,CMPSN:10K OHM,5%,0.25W	01121	CB1035
A5R873	321-0164-00			RES.,FXD,FILM:499 OHM,1%,0.125W	91637	MFF1816G499R0F
A5R874	321-0250-00			RES.,FXD,FILM:3.92K OHM,1%,0.125W	91637	MFF1816G39200F
A5R875	321-0195-00			RES.,FXD,FILM:1.05K OHM,1%,0.125W	91637	MFF1816G10500F
A5R876	321-0230-00			RES.,FXD,FILM:2.43K OHM,1%,0.125W	91637	MFF1816G24300F
A5R877	321-0171-00			RES.,FXD,FILM:590 OHM,1%,0.125W	91637	MFF1816G590R0F
A5R878	321-0192-00			RES.,FXD,FILM:976 OHM,1%,0.125W	91637	MFF1816G976R0F
A5R882	315-0103-00			RES.,FXD,CMPSN:10K OHM,5%,0.25W	01121	CB1035
A5R883	315-0153-00			RES.,FXD,CMPSN:15K OHM,5%,0.25W	01121	CB1535
A5R884	315-0103-00			RES.,FXD,CMPSN:10K OHM,5%,0.25W	01121	CB1035
A5R885	315-0220-00			RES.,FXD,CMPSN:22 OHM,5%,0.25W	01121	CB2205
A5R886	315-0102-00			RES.,FXD,CMPSN:1K OHM,5%,0.25W	01121	CB1025
A5R887	315-0102-00			RES.,FXD,CMPSN:1K OHM,5%,0.25W	01121	CB1025
A5R888	315-0102-00			RES.,FXD,CMPSN:1K OHM,5%,0.25W	01121	CB1025
A5R892	315-0182-00			RES.,FXD,CMPSN:1.8K OHM,5%,0.25W	01121	CB1825
A5R901	315-0390-00			RES.,FXD,CMPSN:39 OHM,5%,0.25W	01121	CB3905
A5R903	321-0160-00			RES.,FXD,FILM:453 OHM,1%,0.125W	91637	MFF1816G453R0F

http://manoman.sqhill.com

Component No.	Tektronix Part No.	Serial/Model No. Eff	Dscont	Name & Description	Mfr Code	Mfr Part Number
A5R904	321-0160-00			RES.,FXD,FILM:453 OHM,1%,0.125W	91637	MFF1816G453R0F
A5R905	321-0184-00			RES.,FXD,FILM:806 OHM,1%,0.125W	91637	MFF1816G806R0F
A5R906	315-0301-00			RES.,FXD,CMPSN:300 OHM,5%,0.25W	01121	CB3015
A5R907	315-0681-00			RES.,FXD,CMPSN:680 OHM,5%,0.25W	01121	CB6815
A5R908	315-0103-00			RES.,FXD,CMPSN:10K OHM,5%,0.25W	01121	CB1035
A5R909	321-0181-00			RES.,FXD,FILM:750 OHM,1%,0.125W	91637	MFF1816G750R0F
A5R910	321-0222-00			RES.,FXD,FILM:2K OHM,1%,0.125W	91637	MFF1816G20000F
A5R912	321-0209-00			RES.,FXD,FILM:1.47K OHM,1%,0.125W	91637	MFF1816G14700F
A5R913	321-0150-00			RES.,FXD,FILM:357 OHM,1%,0.125W	91637	MFF1816G357R0F
A5R914	315-0472-00			RES.,FXD,CMPSN:4.7K OHM,5%,0.25W	01121	CB4725
A5R915	315-0221-00			RES.,FXD,CMPSN:220 OHM,5%,0.25W	01121	CB2215
A5R916	315-0911-00			RES.,FXD,CMPSN:910 OHM,5%,0.25W	01121	CB9115
A5R917	301-0471-00			RES.,FXD,CMPSN:470 OHM,5%,0.5W	01121	EB4715
A5R918	315-0102-00			RES.,FXD,CMPSN:1K OHM,5%,0.25W	01121	CB1025
A5R919	315-0752-00			RES.,FXD,CMPSN:7.5K OHM,5%,0.25W	01121	CB7525
A5R922	321-0129-00			RES.,FXD,FILM:215 OHM,1%,0.125W	91637	MFF1816G215R0F
A5R923	321-0187-00			RES.,FXD,FILM:866 OHM,1%,0.125W	91637	MFF1816G866R0F
A5R924	321-0227-00			RES.,FXD,FILM:2.26K OHM,1%,0.125W	91637	MFF1816G22600F
A5R925	321-0284-00			RES.,FXD,FILM:8.87K OHM,1%,0.125W	91637	MFF1816G88700F
A5R926	315-0201-00			RES.,FXD,CMPSN:200 OHM,5%,0.25W	01121	CB2015
A5R927	315-0103-00			RES.,FXD,CMPSN:10K OHM,5%,0.25W	01121	CB1035
A5R943	315-0102-00			RES.,FXD,CMPSN:1K OHM,5%,0.25W	01121	CB1025
A5R944	315-0334-00			RES.,FXD,CMPSN:330K OHM,5%,0.25W	01121	CB3345
A5R945	315-0101-00			RES.,FXD,CMPSN:100 OHM,5%,0.25W	01121	CB1015
A5R949	315-0361-00			RES.,FXD,CMPSN:360 OHM,5%,0.25W	01121	CB3615
A5R954	315-0132-00			RES.,FXD,CMPSN:1.3K OHM,5%,0.25W	01121	CB1325
A5R955	315-0182-00			RES.,FXD,CMPSN:1.8K OHM,5%,0.25W	01121	CB1825
A5R956	315-0270-00			RES.,FXD,CMPSN:27 OHM,5%,0.25W	01121	CB2705
A5R957	315-0102-00			RES.,FXD,CMPSN:1K OHM,5%,0.25W	01121	CB1025
A5R958	315-0103-00			RES.,FXD,CMPSN:10K OHM,5%,0.25W	01121	CB1035
A5R961	315-0393-00			RES.,FXD,CMPSN:39K OHM,5%,0.25W	01121	CB3935
A5R962	315-0562-00			RES.,FXD,CMPSN:5.6K OHM,5%,0.25W	01121	CB5625
A5R965	315-0331-00			RES.,FXD,CMPSN:330 OHM,5%,0.25W	01121	CB3315
A5R967	315-0331-00			RES.,FXD,CMPSN:330 OHM,5%,0.25W	01121	CB3315
A5R981	315-0472-00			RES.,FXD,CMPSN:4.7K OHM,5%,0.25W	01121	CB4725
A5R982	315-0241-00			RES.,FXD,CMPSN:240 OHM,5%,0.25W	01121	CB2415
A5R983	315-0102-00			RES.,FXD,CMPSN:1K OHM,5%,0.25W	01121	CB1025
A5R985	315-0122-00			RES.,FXD,CMPSN:1.2K OHM,5%,0.25W	01121	CB1225
A5R987	315-0102-00			RES.,FXD,CMPSN:1K OHM,5%,0.25W	01121	CB1025
A5R988	315-0392-00			RES.,FXD,CMPSN:3.9K OHM,5%,0.25W	01121	CB3925
A5R992	315-0220-00			RES.,FXD,CMPSN:22 OHM,5%,0.25W	01121	CB2205
A5R993	315-0220-00			RES.,FXD,CMPSN:22 OHM,5%,0.25W	01121	CB2205
A5R994	315-0220-00			RES.,FXD,CMPSN:22 OHM,5%,0.25W	01121	CB2205
A5S510	263-0070-00			SW SL ACTR ASSY:A COUPLING,6 OF 6 POSITION	80009	263-0070-00
A5S515	263-0065-00			SW SL ACTR ASSY:B COUPLING,4 OF 5 POSITION	80009	263-0065-00
A5S610	263-0068-00			SW SL ACTR ASSY:A SOURCE,6 OF 6 POSITION	80009	263-0068-00
A5S615	263-0070-00			SW SL ACTR ASSY:A COUPLING,6 OF 6 POSITION	80009	263-0070-00
A5U600	156-1150-00			MICROCIRCUIT,LI:VOLTAGE REGULATOR,NEGATIVE	04713	MC79L05ACP
A5VR583	152-0227-00			SEMICOND DEVICE:ZENER,0.4W,6.2V,5%	04713	SZ13903
A5VR685	152-0175-00			SEMICOND DEVICE:ZENER,0.4W,5.6V,5%	04713	SZG35008
A5VR948	152-0278-00			SEMICOND DEVICE:ZENER,0.4W,3V,5%	04713	SZG35009K20
A5W860	131-0566-00			BUS CONDUCTOR:DUMMY RES,2.375,22 AWG	57668	JWW-0200E0
A5W902	131-0566-00			BUS CONDUCTOR:DUMMY RES,2.375,22 AWG	57668	JWW-0200E0
A5W963	131-0566-00			BUS CONDUCTOR:DUMMY RES,2.375,22 AWG	57668	JWW-0200E0

http://manoman.sqhill.com

Component No.	Tektronix Part No.	Serial/Model No. Eff	Dscont	Name & Description	Mfr Code	Mfr Part Number
A12	670-3685-00			CKT BOARD ASSY:TV SYNC SEPARATOR	80009	670-3685-00
A12C2802	283-0059-00			CAP.,FXD,CER DI:1UF,+80-20%,50V	51642	400050Z5U105Z
A12C2803	283-0059-00			CAP.,FXD,CER DI:1UF,+80-20%,50V	51642	400050Z5U105Z
A12C2804	281-0504-00			CAP.,FXD,CER DI:10PF,+/-1PF,500V	04222	7001-COG-100F
A12C2805	281-0504-00			CAP.,FXD,CER DI:10PF,+/-1PF,500V	04222	7001-COG-100F
A12C2812	283-0341-00			CAP.,FXD,CER DI:0.047UF,10%,100V	72982	8121N153X7R0473K
A12C2827	290-0530-00			CAP.,FXD,ELCTLT:68UF,20%,6V	90201	TDC686M006NLF
A12C2854	281-0632-00			CAP.,FXD,CER DI:35PF,1%,500V	59660	308-000C0G0350F
A12C2856	281-0605-00			CAP.,FXD,CER DI:200PF,10%,500V	59660	301000Y5D201K
A12C2860	281-0511-00			CAP.,FXD,CER DI:22PF,+/-2.2PF,500V	59660	301-000C0G0220K
A12C2861	283-0010-00			CAP.,FXD,CER DI:0.05UF,+100-20%,50V	56289	1C10Z5U503Z050B
A12C2865	281-0577-00			CAP.,FXD,CER DI:14PF,5%,500V	04222	7001-COG-140J
A12C2866	283-0010-00			CAP.,FXD,CER DI:0.05UF,+100-20%,50V	56289	1C10Z5U503Z050B
A12C2879	290-0536-00			CAP.,FXD,ELCTLT:10UF,20%,25V	90201	TDC106M025FL
A12CR2807	152-0141-02			SEMICOND DVC,DI:SW,SI,30V,150MA,30V,DO-35	01295	1N4152R
A12CR2809	152-0141-02			SEMICOND DVC,DI:SW,SI,30V,150MA,30V,DO-35	01295	1N4152R
A12CR2818	152-0141-02			SEMICOND DVC,DI:SW,SI,30V,150MA,30V,DO-35	01295	1N4152R
A12CR2824	152-0141-02			SEMICOND DVC,DI:SW,SI,30V,150MA,30V,DO-35	01295	1N4152R
A12CR2825	152-0141-02			SEMICOND DVC,DI:SW,SI,30V,150MA,30V,DO-35	01295	1N4152R
A12CR2826	152-0141-02			SEMICOND DVC,DI:SW,SI,30V,150MA,30V,DO-35	01295	1N4152R
A12CR2828	152-0141-02			SEMICOND DVC,DI:SW,SI,30V,150MA,30V,DO-35	01295	1N4152R
A12CR2831	152-0141-02			SEMICOND DVC,DI:SW,SI,30V,150MA,30V,DO-35	01295	1N4152R
A12CR2865	152-0141-02			SEMICOND DVC,DI:SW,SI,30V,150MA,30V,DO-35	01295	1N4152R
A12Q2802	151-0190-00			TRANSISTOR:NPN,SI,TO-92	04713	SPS7969
A12Q2803	151-0220-00			TRANSISTOR:PNP,SI,TO-92	07263	S036228
A12Q2813	151-0188-00			TRANSISTOR:PNP,SI,TO-92	T0058	2N3906
A12Q2824	151-0188-00			TRANSISTOR:PNP,SI,TO-92	T0058	2N3906
A12Q2834	151-0192-00			TRANSISTOR:SELECTED	04713	SPS8801
A12Q2854	151-0192-00			TRANSISTOR:SELECTED	04713	SPS8801
A12Q2863	151-0188-00			TRANSISTOR:PNP,SI,TO-92	T0058	2N3906
A12R2801	315-0302-00			RES.,FXD,CMPSN:3K OHM,5%,0.25W	01121	CB3025
A12R2802	315-0682-00			RES.,FXD,CMPSN:6.8K OHM,5%,0.25W	01121	CB6825
A12R2803	315-0103-00			RES.,FXD,CMPSN:10K OHM,5%,0.25W	01121	CB1035
A12R2804	315-0123-00			RES.,FXD,CMPSN:12K OHM,5%,0.25W	01121	CB1235
A12R2805	315-0303-00			RES.,FXD,CMPSN:30K OHM,5%,0.25W	01121	CB3035
A12R2807	315-0124-00			RES.,FXD,CMPSN:120K OHM,5%,0.25W	01121	CB1245
A12R2809	315-0123-00			RES.,FXD,CMPSN:12K OHM,5%,0.25W	01121	CB1235
A12R2810	315-0103-00			RES.,FXD,CMPSN:10K OHM,5%,0.25W	01121	CB1035
A12R2811	315-0103-00			RES.,FXD,CMPSN:10K OHM,5%,0.25W	01121	CB1035
A12R2812	315-0914-00			RES.,FXD,CMPSN:910K OHM,5%,0.25W	01121	CB9145
A12R2813	315-0303-00			RES.,FXD,CMPSN:30K OHM,5%,0.25W	01121	CB3035
A12R2814	315-0563-00			RES.,FXD,CMPSN:56K OHM,5%,0.25W	01121	CB5635
A12R2816	315-0471-00			RES.,FXD,CMPSN:470 OHM,5%,0.25W	01121	CB4715
A12R2818	315-0364-00			RES.,FXD,CMPSN:360K OHM,5%,0.25W	01121	CB3645
A12R2820	315-0203-00			RES.,FXD,CMPSN:20K OHM,5%,0.25W	01121	CB2035
A12R2824	315-0182-00			RES.,FXD,CMPSN:1.8K OHM,5%,0.25W	01121	CB1825
A12R2825	315-0202-00			RES.,FXD,CMPSN:2K OHM,5%,0.25W	01121	CB2025
A12R2826	311-1226-00			RES.,VAR,NONWIR:2.5K OHM,20%,0.50W	32997	3386F-T04-252
A12R2827	315-0681-00			RES.,FXD,CMPSN:680 OHM,5%,0.25W	01121	CB6815
A12R2830	315-0112-00			RES.,FXD,CMPSN:1.1K OHM,5%,0.25W	01121	CB1125

http://manoman.sqhill.com

Component No.	Tektronix Part No.	Serial/Model No. Eff	Dscont	Name & Description	Mfr Code	Mfr Part Number
A12R2833	315-0303-00			RES.,FXD,CMPSN:30K OHM,5%,0.25W	01121	CB3035
A12R2834	315-0561-00			RES.,FXD,CMPSN:560 OHM,5%,0.25W	01121	CB5615
A12R2850	315-0274-00			RES.,FXD,CMPSN:270K OHM,5%,0.25W	01121	CB2745
A12R2854	315-0103-00			RES.,FXD,CMPSN:10K OHM,5%,0.25W	01121	CB1035
A12R2856	315-0154-00			RES.,FXD,CMPSN:150K OHM,5%,0.25W	01121	CB1545
A12R2860	315-0822-00			RES.,FXD,CMPSN:8.2K OHM,5%,0.25W	01121	CB8225
A12R2861	315-0123-00			RES.,FXD,CMPSN:12K OHM,5%,0.25W	01121	CB1235
A12R2863	315-0822-00			RES.,FXD,CMPSN:8.2K OHM,5%,0.25W	01121	CB8225
A12R2875	315-0273-00			RES.,FXD,CMPSN:27K OHM,5%,0.25W	01121	CB2735
A12R2879	315-0100-00			RES.,FXD,CMPSN:10 OHM,5%,0.25W	01121	CB1005
A12U2810	156-0136-00			MICROCIRCUIT,LI:OPNL AMPL	02735	CA 3030
A12VR2827	152-0395-00			SEMICOND DEVICE:ZENER,0.4W,4.3V,5%	14552	TD332317
A12VR2832	152-0195-00			SEMICOND DEVICE:ZENER,0.4W,5.1V,5%	04713	SZ11755
				OPTION 5 CHASSIS PARTS		
R625	315-0101-00			RES.,FXD,CMPSN:100 OHM,5%,0.25W	01121	CB1015

Fig. & Index No.	Tektronix Part No.	Serial/Model No. Eff	Dscont	Qty	1 2 3 4 5	Name & Description	Mfr Code	Mfr Part Number
						REPLACEABLE MECHANICAL PARTS OPTION 05		
						CHANGE TO:		
1-3	337-1674-08			1		SHLD,IMPLOSION:FILTER,MKD FOR NTSC	80009	337-1674-08
	337-1674-09			1		SHLD,IMPLOSION:FILTER,MKD FOR CCIR	80009	337-1674-09
-132	333-1810-04			1		PANEL,FRONT:	80009	333-1810-04
	179-2194-01			1		WIRING HARNESS:	80009	179-2194-01
	198-2318-00			1		WIRE SET,ELEC:	80009	198-2318-00
	441-1205-00			1		CHASSIS,SCOPE:SYNC SEPARATOR	80009	441-1205-00

http://manoman.sghill.com

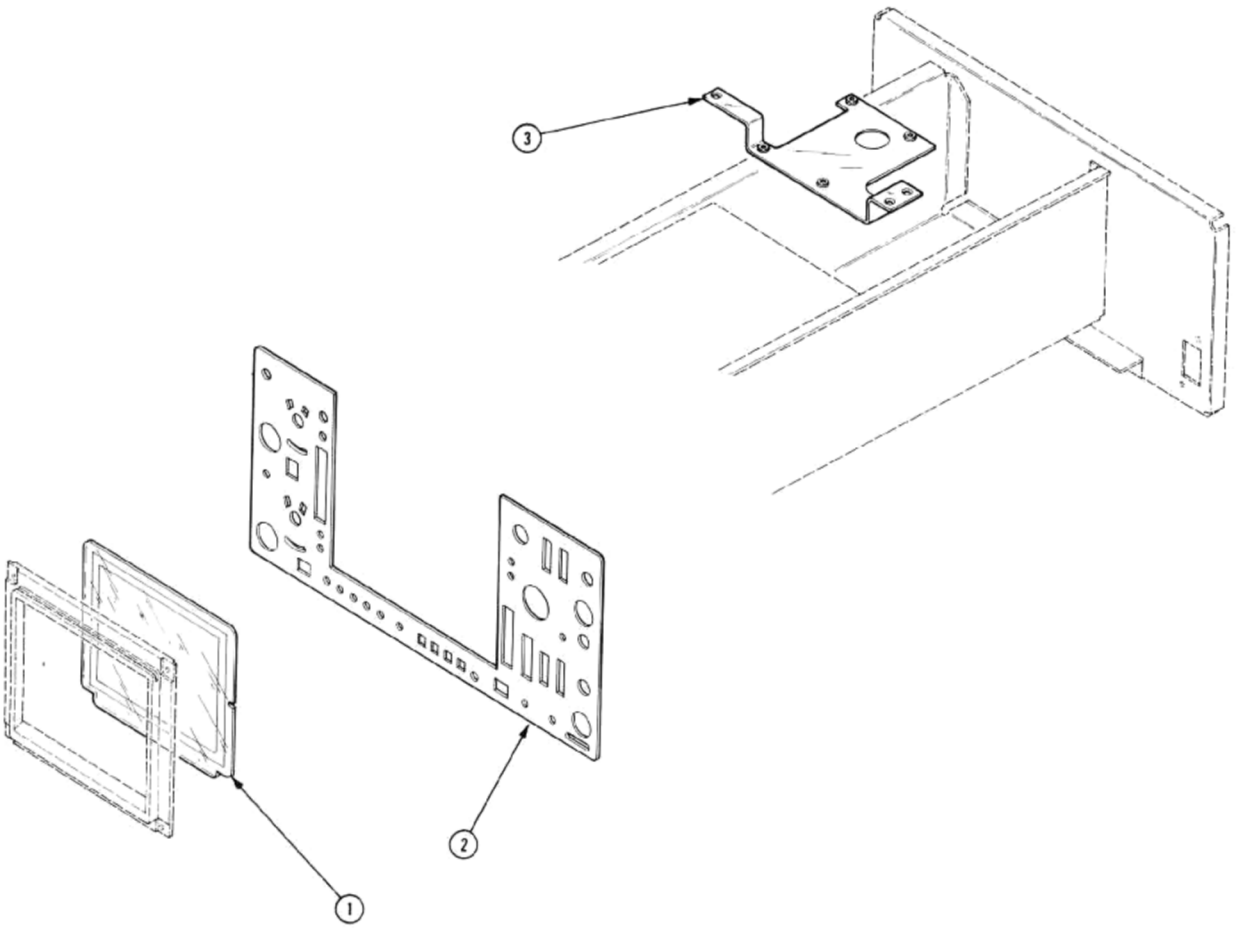

http://manoman.sqhill.com

OPTION 07

INTRODUCTION

Option 07 is a dc to ac inverter that permits Tektronix Oscilloscopes to operate on 12 or 24 V dc with no performance deterioration. Circuitry is provided to protect against damage due to connection of 24 V when in the 12 V mode of operation.

The 24 V external input permits use with conventional dc power (marine and aircraft).

Option 07 is an integral part of the oscilloscope. The modified oscilloscope has a three-position voltage input selection slide switch (visible through the right-hand side panel) at the rear of the line voltage selector switch. A dc input connector is located below the fan cover on the rear panel.

SPECIFICATIONS

AC Requirements

No increase in ac requirements over those of oscilloscopes not having Option 07.

DC Requirements

11.5 to 14 V or 22 to 28 V. 11.5 V operation excludes graticule light operation, probe power use and Option 05. Operating range may be extended to 15 V or 30 V with a series-dropping resistor. Maximum elevation for + or − power lead is 60 V with respect to oscilloscope chassis ground.

Temperature

The same operating and nonoperating range as the oscilloscope without Option 07.

SAFETY CONSIDERATIONS

Option 07 becomes a part of the modified instrument. The safety considerations for the unmodified instrument apply.

FUNCTION OF CONTROLS AND CONNECTORS

Mode Switch[1]

AC — Applies ac power to the oscilloscope power switch.

DC 12 — Permits 12 V operation of the instrument from an external 12 V source.

DC 24 — Permits 24 V operation of the instrument from either an external 24 V power source or from the 1106 Power Supply, which may be mechanically attached to the oscilloscope.

Dc Input Connector

Option 07 mode switch and dc input connector are located on the modified oscilloscope.

OPERATION AND INSPECTION

Set the oscilloscope and Option 07 for the power source available as listed (see Table Option 7-1).

Table Option 7-1
OPTION 07 MODE SWITCH SETTING

Power Source	Oscilloscope Line Selector	Option 07 Mode Switch
115 V AC	115	AC
230 V AC	230	AC
12 V DC	—	12
24 V DC	—	24
1106[1]	—	24

Turn the oscilloscope on. Check that the oscilloscope operates properly on any of the listed power sources that may be available.

Connect the oscilloscope frame to a ground (earth) reference before using.

[1]Be sure that the 1106 Line Selector switch is set to the correct line voltage for proper battery charging.

http://manoman.sqhill.com

CIRCUIT DESCRIPTION

Option 07 is a dc-to-ac inverter. It operates on 12 or 24 V dc. The circuit description is for 24 V operation unless noted otherwise. Refer to the schematic diagram in Section 6 throughout the detailed circuit description.

The operating frequency of the inverter is approximately 400 Hz.

Simplified Block Diagram

See Fig. Option 7-1. The dc source is applied to the turn-off level circuit, the start circuit and primary of T1701. If the dc source is above the level set by Turn-Off Level Adjustment R1613, the turn-off circuit does not operate.

The start circuit provides a large current surge through T1631 secondary to the bases of Q1652, Q1662, Q1654 and Q1664. This starts the inverter.

The turn-off circuit is activated in two ways. In 24 V operation, Q1622 is turned on by the source voltage dropping below 22 V. In 12 V mode of operation, Q1626 is turned on by the accidental application of 24 V dc.

Turn-Off Level Circuit

The voltage reference for the base of Q1606 is set by R1604, VR1604, and VR1605 for about 9.1 V. This establishes the junction of R1607 and the emitters of Q1606 and Q1608 at about 9.7 V. C1605 helps to hold the 9.1 V level, preventing inverter transients from activating the turn-off circuit and prevents Q1608 from turning on when the inverter is started. This allows the power source time to recover after providing the initial-start surge.

Source voltages higher than 22 V dc cause increased current through R1607, Q1606 and R1609. Q1608 is kept cut off by the increased voltage across R1609 and the resulting change across divider R1611-R1613-R1614. This permits no current through R1617. Since R1617 furnishes bias to Q1622, the transistor is cut off. This permits the collector of Q1622 and the rest of the turn-off circuit to rise to a voltage determined by the inverter circuit and the dc source voltage. The collector of Q1622 may be about 24 V (with respect to −dc) with a 12 V dc source and about 36 V with a 24 V dc source.

If the dc source voltage drops to less than 22 V, the current through divider R1609, R1611, R1613 and R1614 is decreased. Q1608 conducts, taking current from Q1606, and causing less drop across R1609. This makes Q1608 conduct more and Q1606 is cut off. Current flow through

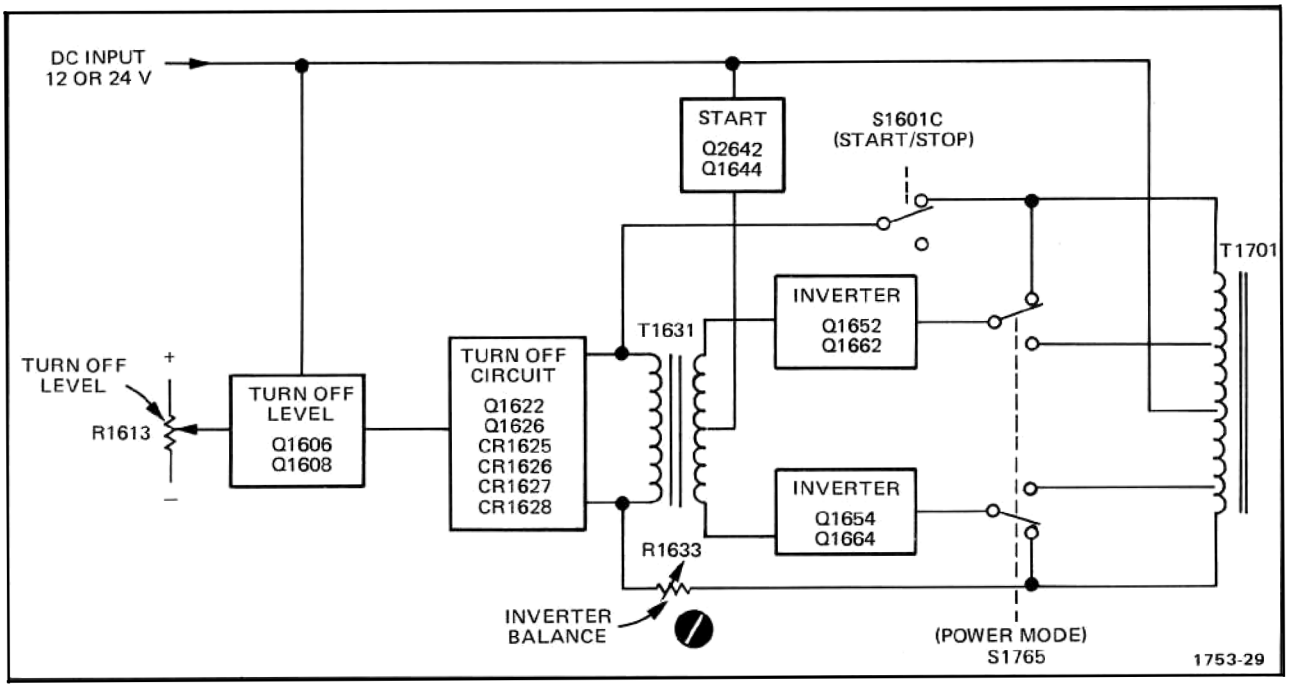

Fig. Option 7-1. Option 07 simplified block diagram.

http://manoman.sqhill.com

R1617 turns Q1622 on. Q1622 saturates, dropping its collector voltage to about 0.2 V. R1618 limits the maximum base current of Q1622.

During 12 V dc operation, there is no current flow through VR1604 and VR1605, since their series rating, about 18 V, exceeds the applied voltage. The base current of Q1606, through R1605, turns Q1606 on enough to take all the current through R1607, which causes Q1608 to be cut off.

Turn-Off Circuit

Q1622 is off under normal operating conditions until the dc source drops below 22 V and causes Q1622 to conduct. Q1622 does not conduct during 12 V dc operation, since the turn-off level circuit is disabled. CR1625, CR1626, CR1627, and CR1628 form a bridge rectifier. The inverter waveform is rectified to provide operating power for the turn-off circuit. C1626 filters the inverter spikes to keep them from firing Q1626 (scr). R1623 prevents C1626 from charging to the peak-to-peak inverter spikes.

Q1622 saturates when it is turned on. C1622 provides the high current path for feedback current via CR1625 or CR1626. Once the inverter is shut down, R1622 establishes a path to discharge C1622.

If 24 V dc is accidentally applied when the mode switch is in the 12 V position, the inverter transformer T1701 attempts to produce two times the correct feedback. This is sufficient to cause VR1622 to conduct. VR1622 provides the firing current for the scr, Q1626. Q1626 fires and shorts out the bridge rectifier and primary of T1631, stopping the inverter. R1625 prevents Q1626 from being fired by inverter noise. R1624 and C1626 provide holding current for Q1626, keeping it conducting until the surge currents created by the over-voltage conditions have terminated. CR1624 permits rapid charging of C1626.

Start Circuit

When S1601 is closed, the external dc source is applied to C1614, VR1641, and R1645. The initial surge is coupled to Q1642 through C1614, VR1639, and R1641. Q1642 saturates until C1614 charges through R1639 to the value determined by VR1639 and the base-emitter junction of Q1642 (about 5.7 V), then Q1642 is cut off. R1641 limits the base current in Q1642. VR1639, once C1614 is charged, makes Q1642 insensitive to input variations. R1642 limits Q1642 collector current. Q1644, R1645, and VR1641 provide a constant current during the time Q1642 is saturated, regardless of the dc source voltage. CR1643 is reverse biased by this starting current. The starting current is applied to the inverter transistors through T1631.

Inverter Circuit

The starting surge is applied to the bases of Q1652, Q1662, Q1654, and Q1664 through T1631, R1652, R1662, R1654, and R1664. Since the transistors do not have identical parameters, one pair will conduct before the other, and start the inverter. Operating base current is provided through CR1643.

R1626, R1631, and T1631 primary and secondary are the main frequency-determining components for the inverter. Four base resistors, R1652, R1662, R1654, and R1664, distribute the drive evenly between the four transistors. C1652, C1662, C1654 and C1664 degenerate the high-frequency response and reduce transients.

Feedback to maintain inverter operation is provided from T1701 primary to T1631 primary through R1626, R1631, R1633, CR1632 and CR1634. R1626 and R1631 provide frequency stability and current limiting. R1633, CR1632, and CR1634 compensate for differences in transistors and components. CR1632 and CR1634 conduct during different inverter half-cycles and permit R1633 to balance the drive to T1701.

C1710, C1720, C1721, C1750, C1760, C1770 and C1780 are added with Option 07 to provide optimum reduction of transients during inverter operation.

DC Input

External power is applied through P1601. CR1601 is normally reverse biased. If the wrong polarity external power is applied, CR1601 becomes forward biased and blows fuse F1601. Low-pass network T1601, C1601, C1603, and C1609 is a filter to reduce transients to the dc source.

Start-Stop Switch

S1601, Section A in the off (stop) position discharges the capacitors in the turn-off and start circuits. This ensures the correct time constants when S1601 is changed to the on (start) position. In the start position, the dc input is applied to the inverter circuitry by S1601, Section A. At the same time S1601, Section B is closed, completing the feedback loop for the inverter transistors. S1601, Section B stops the inverter in the off position by opening the feedback loop between T1701 and T1631.

Power-Mode Switch

Sections A and F connect filter C1671 and R1671 to T1701 during 12 or 24 V operation to reduce converter

http://manoman.sghill.com

transients. Sections C and D select either transformer terminals 11 and 13 or 12 and 14, to provide the same secondary output when operating on 12 or 24 V. Sections B and E connect transformer terminals 10 and 14 to S1765, C and D and to the inverter feedback circuit during 12 or 24 V operation.

MAINTENANCE

Obtaining Replacement Parts

Standard Parts. All electrical and mechanical part replacements for Option 07 can be obtained through your local Tektronix Field Office or representative. However, many of the standard electronic components can be obtained locally in less time than is required to order them from Tektronix, Inc. Before purchasing or ordering replacement parts, check the parts list for value, tolerance, rating and description.

Special Parts. In addition to the standard electronic components, some special components are used in Option 07. These components are manufactured or selected by Tektronix, Inc., to meet specific performance requirements, or are manufactured for Tektronix, Inc., in accordance with our specifications. Most of the mechanical parts used in this instrument have been manufactured by Tektronix, Inc. Order all special parts directly from your local Tektronix Field Office or representative.

Ordering Parts. When ordering replacement parts from Tektronix, Inc., include the following information:

1. Instrument type.

2. Instrument serial number.

3. A description of the part (if electrical, include the circuit number).

4. Tektronix part number.

Circuit Board Chassis Removal

The circuit board is mounted on a small chassis located between the power transformer and the crt shield. To remove the chassis, remove three screws. Two thread-forming screws are located at the top of the chassis. One screw is at the bottom of the chassis and is removed from the right-hand side by going just below the power transformer.

CALIBRATION

Option 07 may be calibrated without removing it from the oscilloscope.

The reference leters (A), (B), etc., refer to points indicated on the schematic and circuit board illustrations.

Equipment Required

DC Power Source. Voltage from 22 V to 28 V and from 11.5 V to 14 V. A source voltage of less than 22 V will turn off Option 07 when it is operating in the 24 V mode. Starting current in 24 V mode is approximately 4 to 10 A. The dc source must be capable of handling this surge without dropping to 22 V or less. The 12 V starting surge is approximately 15 A.

DC Voltmeter. 22 V to 28 V.

Test Oscilloscope. Used to verify the inverter balance adjustment. If the instrument under test and Option 07 are operational and the power source has a negative ground, they may be used as the test oscilloscope for this check.

NOTE

Option 07 is calibrated at the factory using a power supply (having the specifications listed first under the equipment required list). This permits the most accurate setting of the turn-off volts and inverter balance adjustments. Because this type of power supply may not be available, several alternate possibilities are given. The alternate power supplies have drawbacks, including voltage stability vs. time with high discharge rates, see Figure Option 7-2.

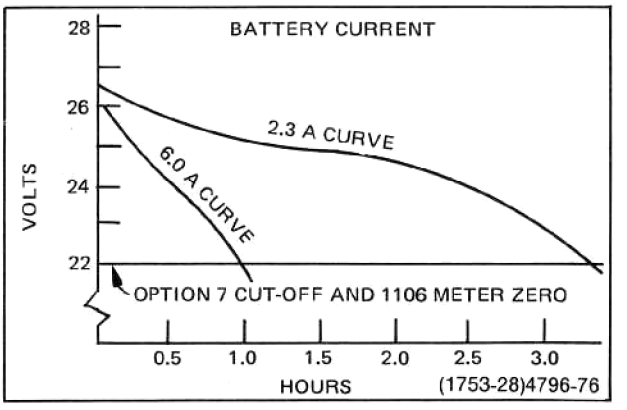

Fig. Option 7-2. Typical battery pack discharge curves.

http://manoman.sqhill.com

1. Variable power supply with the aforementioned capabilities.

2. Variable power supply with an adequate current rating, in series with items 4 or 5.

3. 1106 Power Supply battery pack.[2]

4. Two 12 V wet-cell storage batteries, in series, tapped at 20, 22, or 24 V.[3]

5. 18 to 23 NiCd cells, 4.0 amp hr (D cells) or greater, furnishing 20 to 28 V.[3]

CAUTION

This procedure is for an external dc source with the negative lead at ground potential (negative ground system).

Operating Range

a. Connect the dc source to the oscilloscope equipped with Option 07. Operate the oscilloscope in the 24 V mode. Connect the voltmeter between fuse F1601 (B) and the common negative return (A). Vary the dc source from 28 V to 22 V.

CHECK—Oscilloscope should operate over the voltage range.

b. Change the dc source to 12 V. Operate the oscilloscope in the 12 V mode. Vary the dc source from 14 V to 11.5 V.

CHECK—Oscilloscope should operate over the voltage range.

[2]To set the turn-off level, the battery is charged above the cut-off point (22 V). An oscilloscope is connected and the battery allowed to discharge while its voltage is being monitored. As it reaches 22 V the turn-off point is set to cut off Option 07. The turn-off point on Option 07 approximately coincides with the meter zero on the 1106.

[3]This does not permit accurate adjustment of the turn-off level. NiCd batteries can be used, following the technique used for item 3.

Inverter Balance

NOTE

If the major oscilloscope use is with a 12 V source, do this step while operating the oscilloscope and dc source on 12 V.

Operate the oscilloscope in the 24 V mode. Set the dc source to 24 V. Connect the test oscilloscope between C1601 (C) and the common negative return (A).

CHECK—Signal should be flat. See Figure Option 7-3.

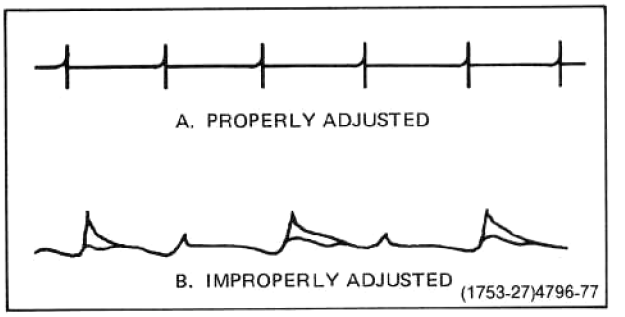

Fig. Option 7-3. Inverter balance.

ADJUST—Inverter Balance (R1633) for the flattest signal.

NOTE

There is a slow drift (about a second) after the inverter balance adjustment has been moved. This is due to transistor characteristics and will require a slight Inverter Balance readjustment.

A very close approximation of the preceding method can be obtained by setting the inverter balance control for the minimum sound coming from the inverter.

Turn-Off Level

Set the dc source for 21.8 V.

ADJUST—Turn-Off Level (R1613) slowly until Option 07 turns off.

http://manoman.sqhill.com

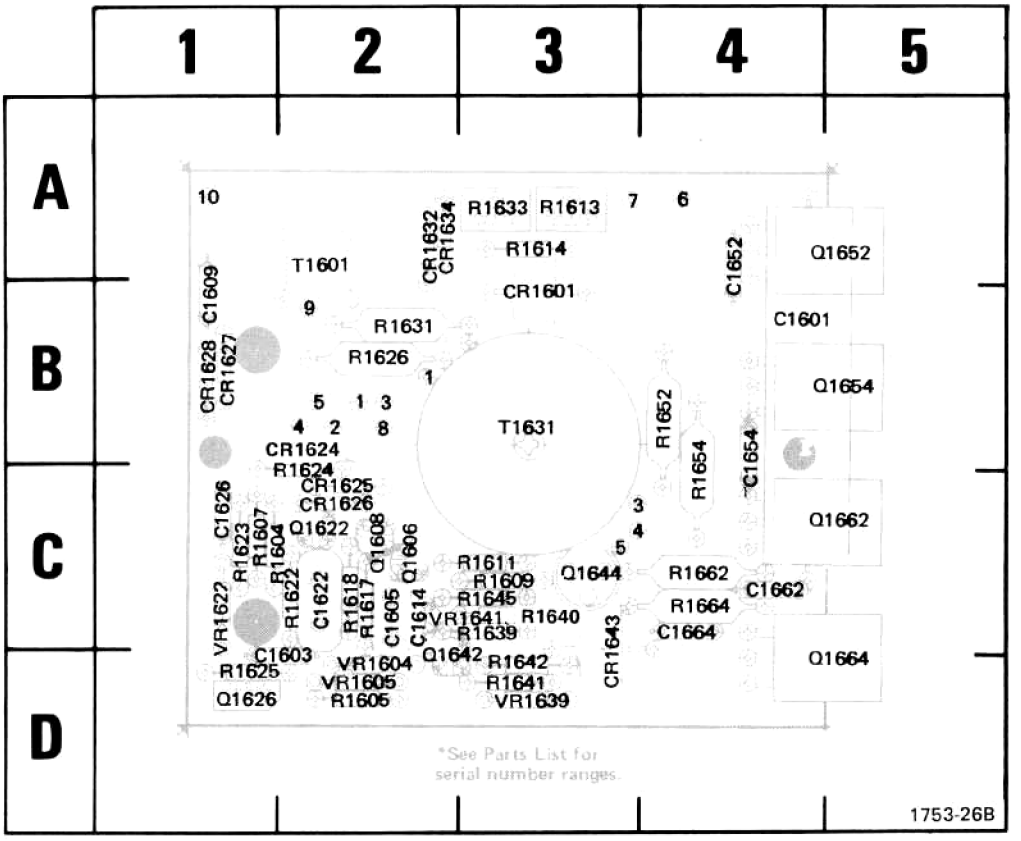

CKT NO	GRID LOC	CKT NO	GRID LOC	CKT NO	GRID LOC	CKT NO	GRID LOC
C1601	4B	CR1628	1B	R1605	2D	R1641	3D
C1603	2D	CR1632	2A	R1607	1C	R1642	3D
C1605	2C	CR1634	2A	R1609	3C	R1645	3C
C1609	1B	CR1643	3D	R1611	3C	R1652	4B
C1614	2C			R1613	3A	R1654	4B
C1622	2C	Q1606	2C	R1614	3A	R1662	4C
C1626	1C	Q1608	2C	R1617	2C	R1664	4C
C1652	4A	Q1622	2C	R1618	2C		
C1654	4B	Q1626	1D	R1622	2C	T1601	2A
C1662	4C	Q1642	2D	R1623	1C	T1631	3B
C1664	4C	Q1644	3C	R1624	2C		
		Q1652	5A	R1625	1D	VR1604	2D
CR1601	3B	Q1654	5B	R1626	2B	VR1605	2D
CR1624	2B	Q1662	5C			VR1622	1C
CR1625	2C	Q1664	5D	R1631	2B	VR1639	3D
CR1626	2C			R1633	3A	VR1641	3C
CR1627	1B	R1604	1C	R1639	3C		
				R1640	3C		

Fig. Option 7-4. Circuit board layout with component locator grid.

http://manoman.sqhill.com

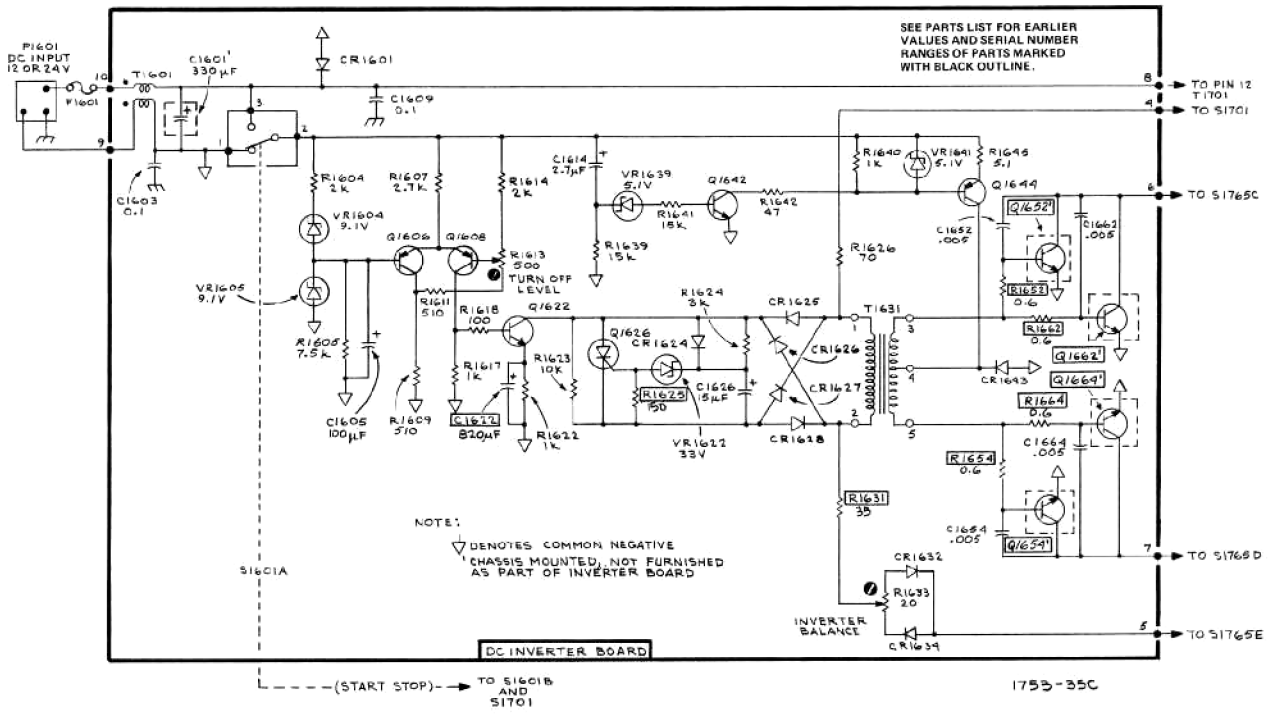

Fig. Option 7-5. The 464 Option 07 dc inverter.

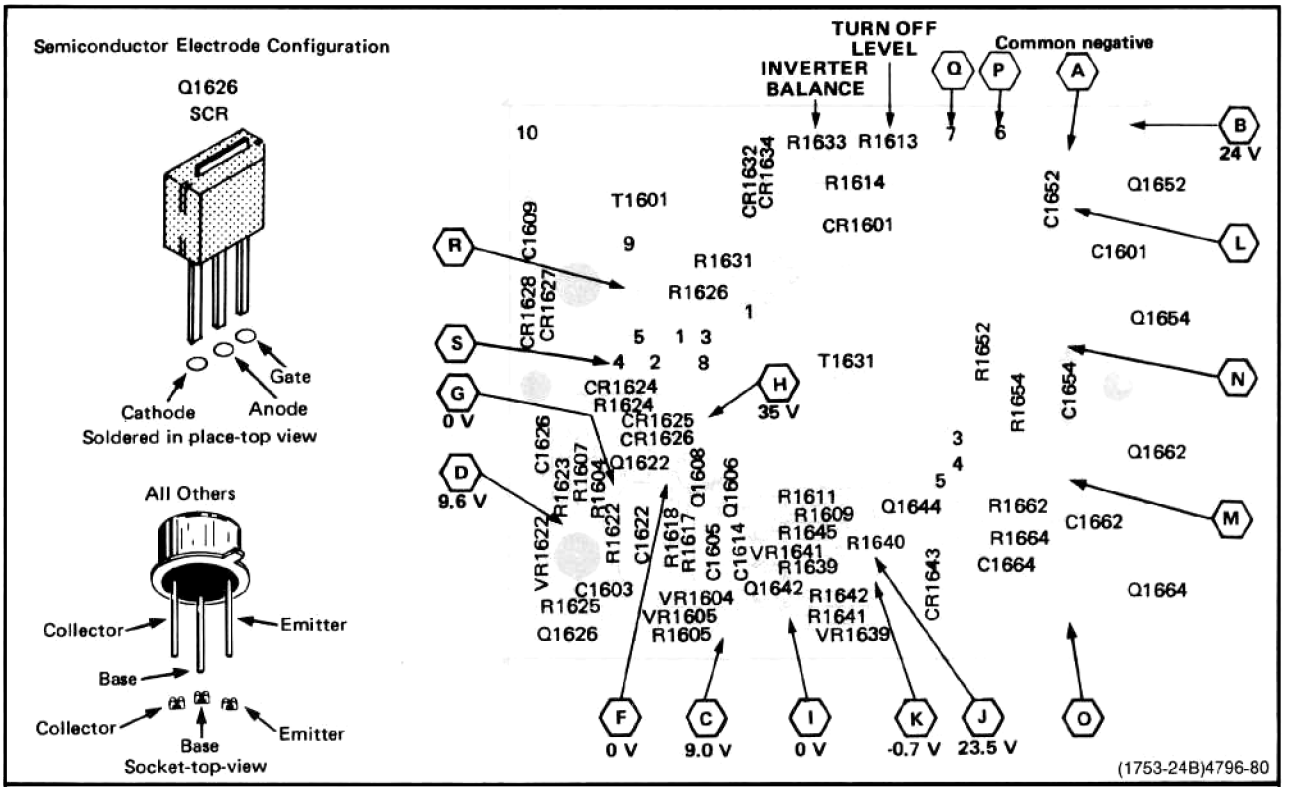

Fig. Option 7-6. Circuit board layout with test voltages.

http://manoman.sqhill.com

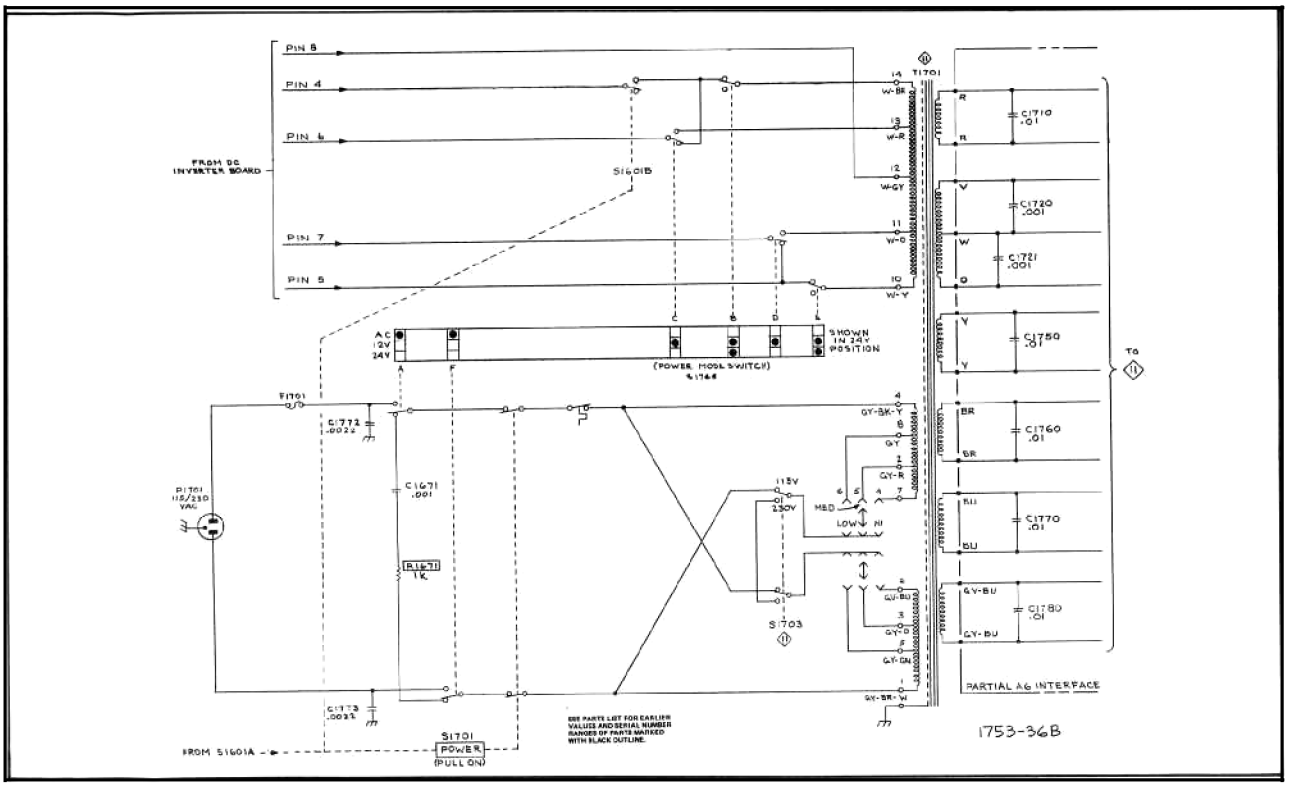

Fig. Option 7-7. 466 Option 07 primary winding.

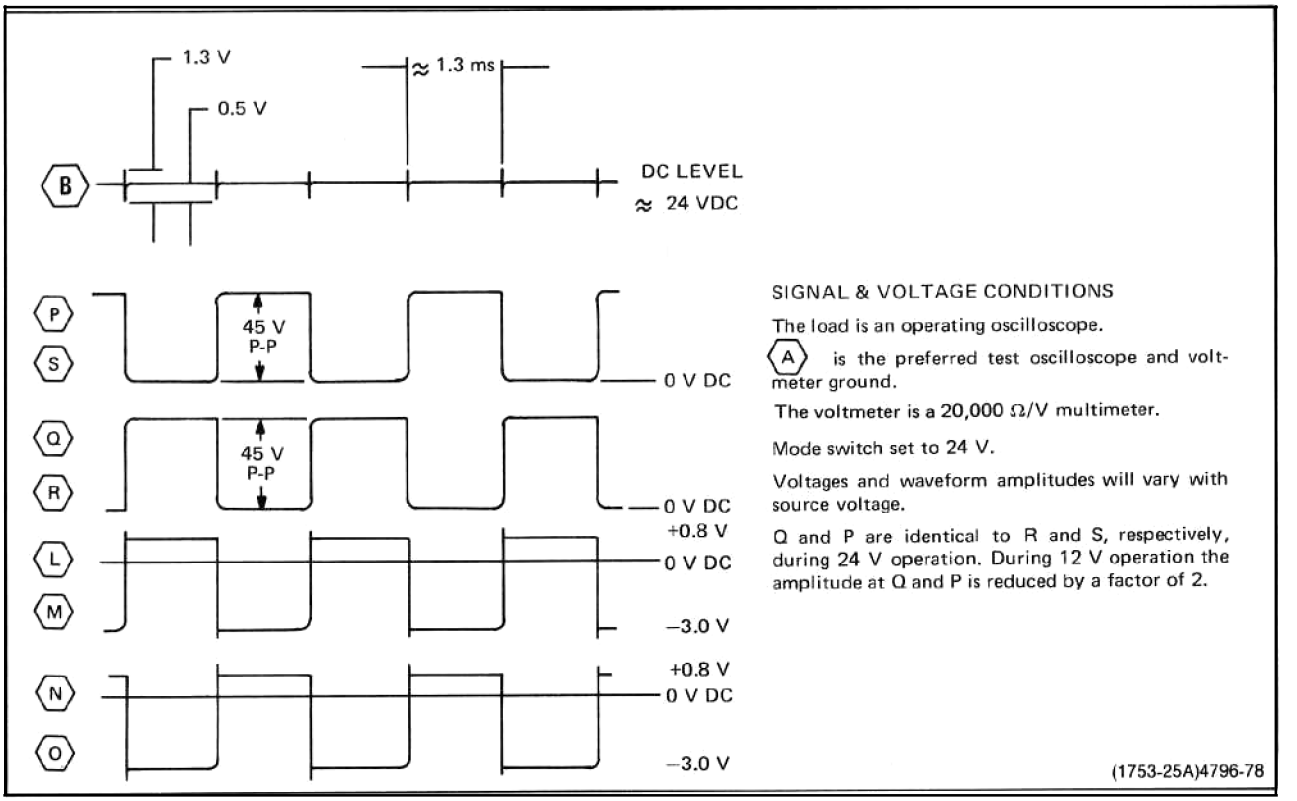

Fig. Option 7-8. Typical idealized waveforms.

http://manoman.sqhill.com

Component No.	Tektronix Part No.	Serial/Model No. Eff	Dscont	Name & Description	Mfr Code	Mfr Part Number
				REPLACEABLE ELECTRICAL PARTS OPTION 07		
				ADD:		
A6C1710	283-0003-00			CAP.,FXD,CER DI:0.01UF,+80-20%,150V	59821	2DDH66J103Z
A6C1710	----- -----			(WHEN INSTRUMENT IS EQUIPPED WITH BOTH		
A6C1710	----- -----			OPTION 4 AND OPTION 7, ONLY ONE SET OF		
A6C1710	----- -----			THESE CAPACITORS IS USED)		
A6C1720	283-0000-00			CAP.,FXD,CER DI:0.001UF,+100-0%,500V	59660	831610Y5U0102P
A6C1720	----- -----			(SEE FOOTNOTE ON C1710)		
A6C1721	283-0000-00			CAP.,FXD,CER DI:0.001UF,+100-0%,500V	59660	831610Y5U0102P
A6C1721	----- -----			(SEE FOOTNOTE ON C1710)		
A6C1750	283-0003-00			CAP.,FXD,CER DI:0.01UF,+80-20%,150V	59821	2DDH66J103Z
A6C1750	----- -----			(SEE FOOTNOTE ON C1710)		
A6C1760	283-0003-00			CAP.,FXD,CER DI:0.01UF,+80-20%,150V	59821	2DDH66J103Z
A6C1760	----- -----			(SEE FOOTNOTE ON C1710)		
A6C1770	283-0003-00			CAP.,FXD,CER DI:0.01UF,+80-20%,150V	59821	2DDH66J103Z
A6C1770	----- -----			(SEE FOOTNOTE ON C1710)		
A6C1780	283-0003-00			CAP.,FXD,CER DI:0.01UF,+80-20%,150V	59821	2DDH66J103Z
A6C1780	----- -----			(SEE FOOTNOTE ON C1710)		
A13	670-2744-02			CKT BOARD ASSY:INVERTER	80009	670-2744-02
A13C1603	283-0178-00			CAP.,FXD,CER DI:0.1UF,+80-20%,100V	72982	8131N145651 104Z
A13C1605	290-0531-00			CAP.,FXD,ELCTLT:100UF,20%,10V	90201	TDC107M010WLC
A13C1609	283-0178-00			CAP.,FXD,CER DI:0.1UF,+80-20%,100V	72982	8131N145651 104Z
A13C1614	290-0573-00			CAP.,FXD,ELCTLT:2.7UF,20%,50V	56289	196D275X0050JA1
A13C1622	290-0708-00			CAP.,FXD,ELCTLT:820UF,20%,6V	56289	109D827X0006F2
A13C1626	290-0528-00			CAP.,FXD,ELCTLT:15UF,20%,50V	56289	196D156X0050PE4
A13C1652	283-0110-00			CAP.,FXD,CER DI:0.005UF,+80-20%,150V	59660	855-547-E-502Z
A13C1654	283-0110-00			CAP.,FXD,CER DI:0.005UF,+80-20%,150V	59660	855-547-E-502Z
A13C1662	283-0110-00			CAP.,FXD,CER DI:0.005UF,+80-20%,150V	59660	855-547-E-502Z
A13C1664	283-0110-00			CAP.,FXD,CER DI:0.005UF,+80-20%,150V	59660	855-547-E-502Z
A13CR1601	152-0198-00			SEMICOND DEVICE:SILICON,200V,3A	03508	1N5624
A13CR1624	152-0333-00			SEMICOND DEVICE:SILICON,55V,200MA	07263	FDH-6012
A13CR1625	152-0107-00			SEMICOND DEVICE:SILICON,400V,400MA	12969	G727
A13CR1626	152-0107-00			SEMICOND DEVICE:SILICON,400V,400MA	12969	G727
A13CR1627	152-0107-00			SEMICOND DEVICE:SILICON,400V,400MA	12969	G727
A13CR1628	152-0107-00			SEMICOND DEVICE:SILICON,400V,400MA	12969	G727
A13CR1632	152-0333-00			SEMICOND DEVICE:SILICON,55V,200MA	07263	FDH-6012
A13CR1634	152-0333-00			SEMICOND DEVICE:SILICON,55V,200MA	07263	FDH-6012
A13CR1643	152-0198-00			SEMICOND DEVICE:SILICON,200V,3A	03508	1N5624
A13Q1606	151-0301-00			TRANSISTOR:SILICON,PNP	27014	2N2907A
A13Q1608	151-0301-00			TRANSISTOR:SILICON,PNP	27014	2N2907A
A13Q1622	151-0302-00			TRANSISTOR:SILICON,NPN	07263	S038487
A13Q1626	151-0506-00			SCR:SILICON	03508	C106B2X283
A13Q1642	151-0302-00			TRANSISTOR:SILICON,NPN	07263	S038487
A13Q1644	151-0335-00			TRANSISTOR:SILICON,PNP	04713	SJE917
A13R1604	315-0202-00			RES.,FXD,CMPSN:2K OHM,5%,0.25W	01121	CB2025
A13R1605	315-0752-00			RES.,FXD,CMPSN:7.5K OHM,5%,0.25W	01121	CB7525
A13R1607	315-0272-00			RES.,FXD,CMPSN:2.7K OHM,5%,0.25W	01121	CB2725
A13R1609	315-0511-00			RES.,FXD,CMPSN:510 OHM,5%,0.25W	01121	CB5115
A13R1611	315-0511-00			RES.,FXD,CMPSN:510 OHM,5%,0.25W	01121	CB5115

http://manoman.sqhill.com

Component No.	Tektronix Part No.	Serial/Model No. Eff	Dscont	Name & Description	Mfr Code	Mfr Part Number
A13R1613	311-1248-00			RES.,VAR,NONWIR:500 OHM,10%,0.50W	73138	72-23-0
A13R1614	315-0202-00			RES.,FXD,CMPSN:2K OHM,5%,0.25W	01121	CB2025
A13R1617	315-0102-00			RES.,FXD,CMPSN:1K OHM,5%,0.25W	01121	CB1025
A13R1618	315-0101-00			RES.,FXD,CMPSN:51 OHM,5%,0.25W	01121	CB1015
A13R1622	315-0102-00			RES.,FXD,CMPSN:1K OHM,5%,0.25W	01121	CB1025
A13R1623	316-0103-00			RES.,FXD,CMPSN:10K OHM,10%,0.25W	01121	CB1031
A13R1624	315-0302-00			RES.,FXD,CMPSN:3K OHM,5%,0.25W	01121	CB3025
A13R1625	316-0101-00			RES.,FXD,CMPSN:100 OHM,10%,0.25W	01121	CB1011
A13R1626	308-0450-00			RES.,FXD,WW:70 OHM,1%,3W	91637	RS2B-B70R00F
A13R1631	308-0450-00			RES.,FXD,WW:70 OHM,1%,3W	91637	RS2B-B70R00F
A13R1633	311-1501-00			RES.,VAR,NONWIR:20 OHM,10%,0.50W	73138	72-37-0
A13R1639	315-0153-00			RES.,FXD,CMPSN:15K OHM,5%,0.25W	01121	CB1535
A13R1640	315-0102-00			RES.,FXD,CMPSN:1K OHM,5%,0.25W	01121	CB1025
A13R1641	315-0153-00			RES.,FXD,CMPSN:15K OHM,5%,0.25W	01121	CB1535
A13R1642	315-0470-00			RES.,FXD,CMPSN:47 OHM,5%,0.25W	01121	CB4705
A13R1645	307-0113-00			RES.,FXD,CMPSN:5.1 OHM,5%,0.25W	01121	CB51G5
A13R1652	308-0459-00			RES.,FXD,WW:1.1 OHM,5%,3W	91637	CW2B-1R100J TR
A13R1654	308-0459-00			RES.,FXD,WW:1.1 OHM,5%,3W	91637	CW2B-1R100J TR
A13R1662	308-0459-00			RES.,FXD,WW:1.1 OHM,5%,3W	91637	CW2B-1R100J TR
A13R1664	308-0459-00			RES.,FXD,WW:1.1 OHM,5%,3W	91637	CW2B-1R100J TR
A13T1601	120-0637-00			XFMR,TOROID:5 TURNS BIFILAR	80009	120-0637-00
A13T1631	120-0852-00			XFMR,TOROID:2 WINDINGS	80009	120-0852-00
A13VR1604	152-0306-00			SEMICOND DEVICE:ZENER,0.4W,9.1V,5%	15238	Z5409
A13VR1605	152-0306-00			SEMICOND DEVICE:ZENER,0.4W,9.1V,5%	15238	Z5409
A13VR1622	152-0241-00			SEMICOND DEVICE:ZENER,0.4W,33V,5%	04713	SZG35009K5
A13VR1639	152-0279-00			SEMICOND DEVICE:ZENER,0.4W,5.1V,5%	04713	SZG35010RL
A13VR1641	152-0279-00			SEMICOND DEVICE:ZENER,0.4W,5.1V,5%	04713	SZG35010RL
				CHASSIS PARTS		
C1601	290-0667-00			CAP.,FXD,ELCTLT:330UF,+75-10%,50V	56289	500D158
C1671	283-0000-00			CAP.,FXD,CER DI:0.001UF,+100-0%,500V	59660	831610Y5U0102P
C1772	283-0263-00			CAP.,FXD,CER DI:0.0022UF,20%,3000V	59660	828556Y5R0222M
C1772	----- -----			(MOUNTED ON REAR PANEL OF 466. NOT USED		
C1772	----- -----			WHEN INSTR IS EQUIPPED WITH BOTH OPT 4		
C1772	----- -----			AND OPT 7)		
C1773	283-0263-00			CAP.,FXD,CER DI:0.0022UF,20%,3000V	59660	828556Y5R0222M
C1773	----- -----			(SEE FOOTNOTE ON C1772)		
DL339	119-0481-00			DELAY LINE,ELEC:120NS,100 OHM	80009	119-0481-00
DS9040	150-0130-00			LAMP,INCAND:5V,60MA	92966	34254-TINNED
DS9060	150-0130-00			LAMP,INCAND:5V,60MA	92966	34254-TINNED
F1601	159-0038-00			FUSE,CARTRIDGE:3AG,15A,32V,FAST-BLOW	71400	AGC15
F1701	159-0016-00			FUSE,CARTRIDGE:3AG,1.5A,250V,FAST-BLOW	71400	AGC 1 1/2
F1701	159-0042-00			FUSE,CARTRIDGE:3AG,0.75A,250V,FAST-BLOW	71400	AGC 3/4
F1701	----- -----			(OPTION A1,A2,A3,A4)		
F1702	159-0172-00			FUSE,CARTRIDGE:TYPE C,13 AMP	S3629	PCC-1089
F1702	----- -----			(INSIDE OPTION A2 POWER CORD ONLY)		
L1551	108-0779-00			COIL,TUBE DEFLE:TRACE ROTATOR	80009	108-0779-00
L1561	108-0714-00			COIL,TUBE DEFLE:Y AXIS ALIGNMENT	80009	108-0714-00

http://manoman.sqhill.com

Component No.	Tektronix Part No.	Serial/Model No. Eff	Dscont	Name & Description	Mfr Code	Mfr Part Number
Q1486	151-0140-00			TRANSISTOR:SILICON,NPN	02735	36568
Q1652	153-0636-00			TRANSISTOR:SILICON,NPN,SELECTED	80009	153-0636-00
Q1654	153-0636-00			TRANSISTOR:SILICON,NPN,SELECTED	80009	153-0636-00
Q1662	153-0636-00			TRANSISTOR:SILICON,NPN,SELECTED	80009	153-0636-00
Q1664	153-0636-00			TRANSISTOR:SILICON,NPN,SELECTED	80009	153-0636-00
P1601	131-1556-00			CONN,RCPT,ELEC:PWR,MALE,125VAC,15A	80009	131-1556-00
R1116	311-1464-00			RES.,VAR,WW:2K OHM,5%,2W	02111	534-264
R1116	----- -----			(SEE DM SERIES MNL FOR ALTN VALUES)		
R1671	308-0077-00			RES.,FXD,WW:1K OHM,5%,3W	00213	1240S 1000-5
S1601	260-0834-00			SWITCH,TOGGLE:DPDT,5A,125VAC,0.25-40 THD	09353	U21-SHZQE
S1701	260-0834-00			SWITCH,TOGGLE:DPDT,5A,125VAC,0.25-40 THD	09353	U21-SHZQE
S1702	260-0551-00			SW,THERMOSTATIC:NC,10A,240VAC	81439	36 T 21 3780
S1703	260-1300-01			SWITCH,SLIDE:DPDT,3A,125V	82389	46206LFE
S1703	260-1300-03			SWITCH,SLIDE:DPDT,3A,125V,PAINTED	80009	260-1300-03
S1703	----- -----			(OPTION 1Y ONLY)		
S1765	260-0760-00			SWITCH,SENS:SUBMINIATURE,10A,125/240VAC	01963	E62-10A
S1765	105-0479-00			ACTUATOR,SWITCH:SLIDE,INVERTER	80009	105-0479-00
	----- -----			(SUBPART OF S1765)		
T1701	120-0908-00			XFMR,PWR,STPDN:	80009	120-0908-00
T1701	120-1407-00			XFMR,PWR,SDN&SU:ASIA LINE VOLTAGE	80009	120-1407-00
T1701	----- -----			(OPTION 1Y ONLY)		
V1555	154-0750-00			ELECTRON TUBE:CRT,T4640-0	80009	154-0750-00

http://manoman.sqhill.com

Fig. & Index No.	Tektronix Part No.	Serial/Model No. Eff	Dscont	Qty	1 2 3 4 5 Name & Description	Mfr Code	Mfr Part Number
					REPLACEABLE MECHANICAL PARTS OPTION 7		
7-9-1	441-1171-00			1	CHASSIS,SCOPE:INVERTER	80009	441-1171-00
	211-0008-00			2	SCREW,MACHINE:4-40 X 0.250,PNH,STL,POZ	83385	ORD BY DESCR
	210-0994-00			2	WASHER,FLAT:0.125 ID X 0.25" OD,STL **********(END ATTACHING PARTS)*********	86928	5702-201-20
-2	----- -----			1	CKT BOARD ASSY:INVERTER(SEE A13 REPL) **********(ATTACHING PARTS)**********		
-3	211-0292-00			2	SCR,ASSEM WSHR:4-40 X 0.29,BRS NI PL **********(END ATTACHING PARTS)*********	78189	ORD BY DESCR
	----- -----			-	.CKT BOARD ASSY INCLUDES:		
-4	136-0252-07			12	.SOCKET,PIN CONN:W/O DIMPLE	22526	75060-012
-5	----- -----			1	.XFMR,TOROID:(SEE T1601 REPL) .**********(ATTACHING PARTS)**********		
-6	343-0443-00			1	.RETAINER,XFMR:	80009	343-0443-00
-7	212-0011-00			1	.SCREW,MACHINE:8-32 X 0.750 INCH,FLH STL	80009	212-0011-00
-8	210-0409-00			1	.NUT,PLAIN,HEX.:8-32 X 0.312 INCH,BRS .**********(END ATTACHING PARTS)*********	73743	3046-402
-9	----- -----			4	TRANSISTOR:(SEE Q1652,Q1654,Q1662,Q1664 RE **********(ATTACHING PARTS)**********		
-10	210-0586-00			3	NUT,PL,ASSEM WA:4-40 X 0.25,STL,CD PL	78189	211-041800-00
-11	343-0451-00			1	RETAINER,XSTR: **********(END ATTACHING PARTS)*********	80009	343-0451-00
-12	342-0195-00			1	INSULATOR,PLATE:0.70 X 3 INCHES LONG	08530	OBD
-13	348-0141-00			1	GROMMET,PLASTIC:U-SHP,0.625 X 0.658 INCH	80009	348-0141-00
-14	348-0055-00			1	GROMMET,PLASTIC:0.25 INCH DIA	80009	348-0055-00
-15	352-0031-00			1	FUSEHOLDER:3AG FUSE **********(ATTACHING PARTS)**********	75915	357001
-16	211-0507-00			1	SCREW,MACHINE:6-32 X 0.312 INCH,PNH STL	83385	ORD BY DESCR
-17	210-0006-00			1	WASHER,LOCK:#6 INTL,0.018 THK,STL CD PL	78189	1206-00-00-0541C
-18	210-0407-00			1	NUT,PLAIN,HEX.:6-32 X 0.25 INCH,BRS **********(END ATTACHING PARTS)*********	73743	3038-0228-402
-19	407-1341-00			1	BRACKET,ELEC SW:ALUMINUM	80009	407-1341-00
-20	260-0760-00			6	SWITCH,SENS:SUBMINIATURE,10A,125/240VAC	01963	E62-10A
-21	105-0479-00			1	ACTUATOR,SWITCH:SLIDE,INVERTER **********(ATTACHING PARTS)**********	80009	105-0479-00
-22	211-0212-00			2	SCREW,MACHINE:2-56 X 1.75 INCH,PNH STL	83385	ORD BY DESCR
-23	210-0405-00			2	NUT,PLAIN,HEX:2-56 X 0.188,BRS,CD PL **********(END ATTACHING PARTS)*********	73743	12157-50
	214-1925-00			1	SPRING,SW ACT:POWER SOURCE	80009	214-1925-00
-24	386-2649-00			1	PL,ACTR GUIDE:INVERTER	80009	386-2649-00
-25	260-0834-00			1	SWITCH,TOGGLE:DPDT,5A,125VAC,0.25-40 THD **********(ATTACHING PARTS)**********	09353	U21-SHZQE
-26	210-0562-00			1	NUT,PLAIN,HEX.:0.25-40 X 0.312 INCH,BBS	73743	2X20224-402
-27	210-0046-00			1	WASHER,LOCK:0.261 ID,INTL,0.018 THK,BRS **********(END ATTACHING PARTS)*********	78189	1214-05-00-0541C
	131-1556-00			1	CONN,RCPT,ELEC:PWR,MALE,125VAC,15A **********(ATTACHING PARTS)**********	80009	131-1556-00
	211-0101-00			2	SCREW,MACHINE:4-40 X 0.25,FLH,100 DEG,STL **********(END ATTACHING PARTS)*********	83385	ORD BY DESCR
	179-2145-00			1	WIRING HARNESS:	80009	179-2145-00
	348-0056-00			1	GROMMET,PLASTIC:0.375 INCH DIA	80009	348-0056-00
	200-1634-00			1	COVER SCOPE:REAR	80009	200-1634-00
	210-0204-00			1	TERMINAL,LUG:0.146 INCH DIA DE,45 DEG BE	78189	2157-06-01-2520N
	334-2268-00			1	MARKER,IDENT:	80009	334-2268-00
	348-0365-00			4	FOOT,CABINET:PLASTIC,W/LATCH GROOVE	80009	348-0365-00
					ACCESSORIES		
	161-0094-00			1	CABLE ASSY,PWR,:3 WIRE,36 INCHES LONG	70903	ORD BY DESCR

http://manoman.sqhill.com

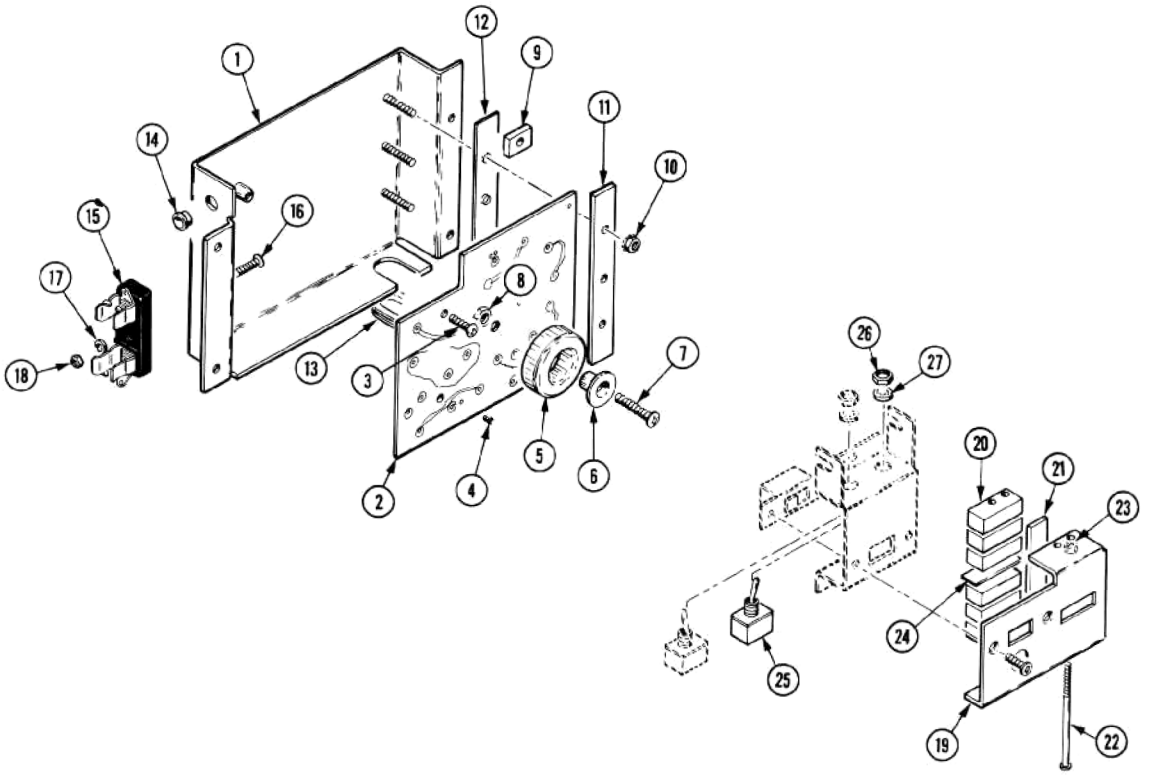

Fig. Option 7-9. Option 07 exploded view.

http://manoman.sqhill.com

POWER CORD OPTIONS

Instruments are shipped with the required power cord as ordered by the customer. Available power cord information is presented in Table Option A1/A4-1, and the following list identifies the Tektronix part numbers for the available power cords and associated fuses. Contact your Tektronix representative or local Tektronix Field Office for additional power cord information.

Option A1 (Universal Euro)

Power cord	161-0033-27
Fuse	159-0042-00

Option A2 (UK)

Power cord	161-0033-28
Fuse (instrument)	159-0042-00
Fuse (power cord plug)	159-0172-00

Option A3 (Australian)

Power cord	161-0033-29
Fuse	159-0042-00

Option A4 (North American)

Power cord	161-0033-38
Fuse	159-0042-00

Table Option A1/A4-1
PLUG CONFIGURATION AND LINE VOLTAGE DATA

Plug Configuration	Usage	Line Voltage	Reference Standards	Option Number
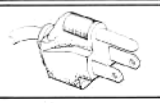	North American 120V/ 15A	120V	ANSI C73.11 NEMA 5-15-P IEC 83	Standard
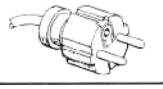	Universal Euro 240V/ 10-16A	240V	CEE (7),II,IV,VII IEC 83	A1
	UK 240V/ 13A	240V	BS 1363 IEC 83	A2
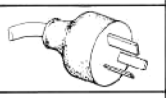	Australian 240V/ 10A	240V	AS C112	A3
	North American 240V/ 15A	240V	ANSI C73.20 NEMA 6-15-P IEC 83	A4

Abbreviations:
ANSI — American National Standards Institute
AS — Standards Association of Australia
BS — British Standards Institution
CEE — International Commission on Rules for the Approval of Electrical Equipment
IEC — International Electrotechnical Commission
NEMA — National Electrical Manufacturer's Association

(2931-21)4796-28

http://manoman.sqhill.com

REPLACEABLE ELECTRICAL PARTS

PARTS ORDERING INFORMATION

Replacement parts are available from or through your local Tektronix, Inc. Field Office or representative.

Changes to Tektronix instruments are sometimes made to accommodate improved components as they become available, and to give you the benefit of the latest circuit improvements developed in our engineering department. It is therefore important, when ordering parts, to include the following information in your order: Part number, instrument type or number, serial number, and modification number if applicable.

If a part you have ordered has been replaced with a new or improved part, your local Tektronix, Inc. Field Office or representative will contact you concerning any change in part number.

Change information, if any, is located at the rear of this manual.

LIST OF ASSEMBLIES

A list of assemblies can be found at the beginning of the Electrical Parts List. The assemblies are listed in numerical order. When the complete component number of a part is known, this list will identify the assembly in which the part is located.

CROSS INDEX-MFR. CODE NUMBER TO MANUFACTURER

The Mfr. Code Number to Manufacturer index for the Electrical Parts List is located immediately after this page. The Cross Index provides codes, names and addresses of manufacturers of components listed in the Electrical Parts List.

ABBREVIATIONS

Abbreviations conform to American National Standard Y1.1.

COMPONENT NUMBER (column one of the Electrical Parts List)

A numbering method has been used to identify assemblies, subassemblies and parts. Examples of this numbering method and typical expansions are illustrated by the following:

Example a.



Read: Resistor 1234 of Assembly 23

Example b.

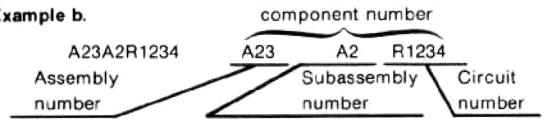

Read: Resistor 1234 of Subassembly 2 of Assembly 23

Only the circuit number will appear on the diagrams and circuit board illustrations. Each diagram and circuit board illustration is clearly marked with the assembly number. Assembly numbers are also marked on the mechanical exploded views located in the Mechanical Parts List. The component number is obtained by adding the assembly number prefix to the circuit number.

The Electrical Parts List is divided and arranged by assemblies in numerical sequence (e.g., assembly A1 with its subassemblies and parts, precedes assembly A2 with its subassemblies and parts).

Chassis-mounted parts have no assembly number prefix and are located at the end of the Electrical Parts List.

TEKTRONIX PART NO. (column two of the Electrical Parts List)

Indicates part number to be used when ordering replacement part from Tektronix.

SERIAL/MODEL NO. (columns three and four of the Electrical Parts List)

Column three (3) indicates the serial number at which the part was first used. Column four (4) indicates the serial number at which the part was removed. No serial number entered indicates part is good for all serial numbers.

NAME & DESCRIPTION (column five of the Electrical Parts List)

In the Parts List, an Item Name is separated from the description by a colon (:). Because of space limitations, an Item Name may sometimes appear as incomplete. For further Item Name identification, the U.S. Federal Cataloging Handbook H6-1 can be utilized where possible.

MFR. CODE (column six of the Electrical Parts List)

Indicates the code number of the actual manufacturer of the part. (Code to name and address cross reference can be found immediately after this page.)

MFR. PART NUMBER (column seven of the Electrical Parts List)

Indicates actual manufacturers part number.

http://manoman.sghill.com

CROSS INDEX - MFR. CODE NUMBER TO MANUFACTURER

Mfr. Code	Manufacturer	Address	City, State, Zip Code
00213	NYTRONICS COMPONENTS GROUP INC SUBSIDIARY OF NYTRONICS INC	ORANGE ST	DARLINGTON SC 29532
00779	AMP INC	2800 FULLING MILL PO BOX 3608	HARRISBURG PA 17105
00853	SANGAMO WESTON INC COMPONENTS DIV	SANGAMO RD PO BOX 128	PICKENS SC 29671-9716
01121	ALLEN-BRADLEY CO	1201 SOUTH 2ND ST	MILWAUKEE WI 53204-2410
01295	TEXAS INSTRUMENTS INC SEMICONDUCTOR GROUP	13500 N CENTRAL EXP PO BOX 655012	DALLAS TX 75265
01686	RCL ELECTRONICS/SHALLCROSS INC SUB OF HIRSCH AND ASSOCIATES INC	195 MCGREGOR ST	MANCHESTER NH 03102-3731
01963	CHERRY ELECTRICAL PRODUCTS CORP	3600 SUNSET AVE	WAUKEGAN IL 60087-3214
02111	HAMILTON STANDARD CONTROLS INC SPECTROL DIV	17070 E GALE AVE P O BOX 1220	CITY OF INDUSTRY CA 91749
02114	AMPEREX ELECTRONIC CORP FERROXCUBE DIV	5083 KINGS HWY	SAUGERTIES NY 12477
02735	RCA CORP SOLID STATE DIVISION	ROUTE 202	SOMERVILLE NJ 08876
03508	GENERAL ELECTRIC CO SEMI-CONDUCTOR PRODUCTS DEPT	W GENESEE ST	AUBURN NY 13021
04099	CAPCO INC	1328 WINTERS AVE PO BOX 1028	GRAND JUNCTION CO 81502
04222	AVX CERAMICS DIV OF AVX CORP	19TH AVE SOUTH P O BOX 867	MYRTLE BEACH SC 29577
04713	MOTOROLA INC SEMICONDUCTOR PRODUCTS SECTOR	5005 E MCDOWELL RD	PHOENIX AZ 85008-4229
05397	UNION CARBIDE CORP MATERIALS SYSTEMS DIV	11901 MADISON AVE	CLEVELAND OH 44101
05828	GENERAL INSTRUMENT CORP GOVERNMENT SYSTEMS DIV	600 W JOHN ST	HICKSVILLE NY 11802
06001	GENERAL ELECTRIC CO ELECTRONIC CAPACITOR PRODUCT SECTION	P O BOX 1388	COLUMBIA SC 29202
07263	FAIRCHILD SEMICONDUCTOR CORP NORTH AMERICAN SALES SUB OF SCHLUMBERGER LTD MS 118	10400 RIDGEVIEW CT	CUPERTINO CAW CA 95014
07716	TRW INC TRW IRC FIXED RESISTORS/BURLINGTON	2850 MT PLEASANT AVE	BURLINGTON IA 52601
08806	GENERAL ELECTRIC CO MINIATURE LAMP PRODUCTS DEPT	NELA PK	CLEVELAND OH 44112
09353	C AND K COMPONENTS INC	15 RIVERDALE AVE	NEWTON MA 02158-1057
12617	HAMLIN INC	GROVE AND LAKE STS	LAKE MILLS WI 53551
12697	CLAROSTAT MFG CO INC	LOWER WASHINGTON ST	DOVER NH 03820
12954	MICROSEMI CORP - SCOTTSDALE	8700 E THOMAS RD P O BOX 1390	SCOTTSDALE AZ 85252
12969	UNITRODE CORP	5 FORBES RD	LEXINGTON MA 02173-7305
13511	AMPHENOL CADRE DIV BUNKER RAMO CORP		LOS GATOS CA
14193	CAL-R INC	1601 OLYMPIC BLVD PO BOX 1397	SANTA MONICA CA 90406
14433	ITT SEMICONDUCTORS DIV		WEST PALM BEACH FL
14552	MICROSEMI CROP	2830 S FAIRVIEW ST	SANTA ANA CA 92704-5948
14752	ELECTRO CUBE INC	1710 S DEL MAR AVE	SAN GABRIEL CA 91776-3825
14936	GENERAL INSTRUMENT CORP DISCRETE SEMI CONDUCTOR DIV	600 W JOHN ST	HICKSVILLE NY 11802
15238	ITT SEMICONDUCTORS A DIVISION OF INTERNATIONAL TELEPHONE AND TELEGRAPH CORP	500 BROADWAY P O BOX 168	LAWRENCE MA 01841-3002
15454	AMETEK INC RODAN DIV	2905 BLUE STAR ST	ANAHEIM CA 92806-2510
15513	DATA DISPLAY PRODUCTS	301 CORAL CIR	EL SEGUNDO CA 90245-4620
16546	MEPCO/CENTRALAB A NORTH AMERICAN PHILIPS CO	4561 COLORADO	LOS ANGELES CA 90039-1103
19396	ILLINOIS TOOL WORKS INC PAKTRON DIVISION	1205 MCCONVILLE RD PO BOX 4539	LYNCHBURG VA 24502-4535
19701	MEPCO/CENTRALAB A NORTH AMERICAN PHILIPS CO	P O BOX 760	MINERAL WELLS TX 76067-0760

http://manoman.sqhill.com

CROSS INDEX - MFR. CODE NUMBER TO MANUFACTURER

Mfr. Code	Manufacturer	Address	City, State, Zip Code
22526	DU PONT E I DE NEMOURS AND CO INC DU PONT CONNECTOR SYSTEMS DIV MILITARY PRODUCTS GROUP	515 FISHING CREEK RD	NEW CUMBERLAND PA 17070-3007
24546	CORNING GLASS WORKS	550 HIGH ST	BRADFORD PA 16701-3737
24931	SPECIALTY CONNECTOR CO INC	2100 EARLYWOOD DR PO BOX 547	FRANKLIN IN 46131
25088	SIEMENS CORP	186 WOOD AVE S	ISELIN NJ 08830-2704
27014	NATIONAL SEMICONDUCTOR CORP	2900 SEMICONDUCTOR DR	SANTA CLARA CA 95051-0606
31433	UNION CARBIDE CORP ELECTRONICS DIV	HWY 276 SE PO BOX 5928	GREENVILLE SC 29606
31918	ITT SCHADOW INC	8081 WALLACE RD	EDEN PRAIRIE MN 55344-2224
32293	INTERSIL INC SUB OF GENERAL ELECTRIC CO	10600 RIDGEVIEW COURT	CUPERTINO CA 95014-0704
32997	BOURNS INC TRIMPOT DIV	1200 COLUMBIA AVE	RIVERSIDE CA 92507-2114
33095	SPECTRUM CONTROL INC	2185 WEIGHT ST	ERIE PA 16505
50434	HEWLETT-PACKARD CO OPTOELECTRONICS DIV	370 W TRIMBLE RD	SAN JOSE CA 95131
51406	MURATA ERIE NORTH AMERICA INC GEORGIA OPERATIONS	2200 LAKE PARK DR	SMYRNA GA 30080
51984	NEC AMERICA INC	2741 PROSPERITY AVE	FAIRFAX VA 22031-4308
52763	STETTNER ELECTRONICS INC	6135 AIRWAYS BLVD PO BOX 21947	CHATTANOOGA TN 37421-2970
52769	SPRAGUE-GOODMAN ELECTRONICS INC	134 FULTON AVE	GARDEN CITY PARK NY 11040-5352
54583	TDK ELECTRONICS CORP	12 HARBOR PARK DR	PORT WASHINGTON NY 11550
55680	NICHICON /AMERICA/ CORP	927 E STATE PKY	SCHAUMBURG IL 60195-4526
55801	COMPENSATED DEVICES INC	166 TREMONT ST	MELROSE MA 02176-2204
56289	SPRAGUE ELECTRIC CO WORLD HEADQUARTERS	92 HAYDEN AVE	LEXINGTON MA 02173-7929
56845	DALE ELECTRONICS INC	2300 RIVERSIDE BLVD PO BOX 74	NORFOLK NE 68701-2242
57668	R-OHM CORP	16931 MILLIKEN AVE	IRVINE CA 92713
59660	TUSONIX INC	7741 N BUSINESS PARK DR PO BOX 37144	TUCSON AZ 85740-7144
59821	MEPCO/CENTRALAB A NORTH AMERICAN PHILIPS CO	7158 MERCHANT AVE	EL PASO TX 79915-1207
71400	BUSSMANN DIV OF COOPER INDUSTRIES INC	114 OLD STATE RD PO BOX 14460	ST LOUIS MO 63178
71590	MEPCO/CENTRALAB INC A NORTH AMERICAN PHILIPS CO	HWY 20 W P O BOX 858	FORT DODGE IA 50501
71707	COTO CORP	65 PAVILION AVE	PROVIDENCE RI 02905-1523
74276	GENERAL INSTRUMENT CORP SIGNALITE DIV	1933 HECK AVE	NEPTUNE NJ 07753
75042	TRW INC TRW ELECTRONIC COMPONENTS IRC FIXED RESISTORS PHILADELPHIA DIV	401 N BROAD ST	PHILADELPHIA PA 19108-1001
75915	LITTELFUSE TRACTOR INC SUB TRACTOR INC	800 E NORTHWEST HWY	DES PLAINES IL 60016-3049
76493	BELL INDUSTRIES INC JW MILLER DIV	19070 REYES AVE PO BOX 5825	COMPTON CA 90224-5825
80009	TEKTRONIX INC	14150 SW KARL BRAUM DR PO BOX 500 MS 53-111	BEAVERTON OR 97077
80031	MEPCO/ELECTRA INC	22 COLUMBIA RD	MORRISTOWN NJ 07960
81439	THERM-O-DISC INC SUB OF EMERSON ELECTRIC CO	1320 S MAIN ST PO BOX 3538	MANSFIELD OH 44907-2516
82389	SWITCHCRAFT INC SUB OF RAYTHEON CO	5555 N ELSTRON AVE	CHICAGO IL 60630-1314
83003	VARO INC	2203 WALNUT ST PO BOX 401426	GARLAND TX 75042
90201	AEROVOX MALLORY	101 MALLORY DR	GLASGOW KY 42141
91637	DALE ELECTRONICS INC	2064 12TH AVE PO BOX 609	COLUMBUS NE 68601-3632
S3629	SCHURTER AG H C/O PANEL COMPONENTS CORP	2015 SECOND STREET	BERKELEY CA 94170
TK0020	UNITED CHEMI-CON INC	1128 LEXINGTON AVE	ROCHESTER NY 14606

http://manoman.sqhill.com

CROSS INDEX - MFR. CODE NUMBER TO MANUFACTURER

Mfr. Code	Manufacturer	Address	City, State, Zip Code
TK0191	SONY TEKTRONIX	PO BOX 14 HANEDA AIRPORT	TOKYO JAPAN
TK1345	ZMAN AND ASSOCIATES	7633 S 180TH	KENT WA 98032
TK1727	PHILIPS NEDERLAND BV AFD ELONCO	POSTBUS 90050	5600 PB EINDHOVEN THE NETHERLANDS
TK2038	MULTICOMP INC	3005 SW 154TH TERRACE #3	BEAVERTON OR 97006
TK2042	ZMAN & ASSOCIATES	7633 SO. 180TH	KENT, WA 98032
TK2165	TRI-QUEST CORP	3000 LEWIS AND CLARK HWY	VANCOUVER WA 98661-2999

http://manoman.sqhill.com

Component No.	Tektronix Part No.	Serial/Assembly No. Effective	Dscont	Name & Description	Mfr. Code	Mfr. Part No.
A1	670-3254-03			CIRCUIT BD ASSY:ATTENUATOR (STANDARD, OPTION 04 & 07)	80009	670-3254-03
A1	672-0554-02			CIRCUIT BD ASSY:ATTENUATOR (OPTION 05 ONLY)	80009	672-0554-02
A1	670-3254-02			CIRCUIT BD ASSY:ATTENUATOR (OPTION 05 ONLY)	80009	670-3254-02
A1A1	672-0841-01			CIRCUIT BD ASSY:VERTICAL MODE (INCLUDES A1,A3)	80009	672-0841-01
A2	670-6301-04			CIRCUIT BD ASSY:VERTICAL PREAMP	80009	670-6301-04
A3	670-5998-00			CIRCUIT BD ASSY:VERTICAL MODE SWITCH	80009	670-5998-00
A4	670-2811-05			CIRCUIT BD ASSY:VERTICAL OUTPUT	80009	670-2811-05
A5	670-6293-02	B020000	B200154	CIRCUIT BD ASSY:TRIGGER (STANDARD, OPTION 04 & 07)	80009	670-6293-02
A5	670-6293-07	B200155		CIRCUIT BD ASSY:TRIGGER (STANDARD, OPTION 04 & 07)	80009	670-6293-07
A5	670-6293-03	B200000	B200154	CIRCUIT BD ASSY:TRIGGER (OPTION 05 ONLY)	80009	670-6293-03
A5	670-6293-09	B200155		CIRCUIT BD ASSY:TRIGGER (OPTION 05 ONLY)	80009	670-6293-09
A6	670-2805-28	B020000	B200191	CIRCUIT BD ASSY:INTERFACE	80009	670-2805-28
A6	670-2805-30	B200192	B200983	CIRCUIT BD ASSY:INTERFACE	80009	670-2805-30
A6	670-2805-32	B200984		CIRCUIT BD ASSY:INTERFACE	80009	670-2805-32
A6	670-2805-30		B200949	CIRCUIT BD ASSY:INTERFACE (WITH DM44)	80009	670-2805-30
A6	670-2805-32	B200950		CIRCUIT BD ASSY:INTERFACE (WITH DM44)	80009	670-2805-32
A7	672-0460-02			CIRCUIT BD ASSY:TIME/DIV	80009	672-0460-02
A8	670-2754-01			CIRCUIT BD ASSY:HIGH VOLTAGE MULTIPLIER	80009	670-2754-01
A9	670-2279-01			CIRCUIT BD ASSY:CRT SCALE ILLUMINATION	80009	670-2279-01
A10	670-2808-00	B200000	B200445	CIRCUIT BD ASSY:STORAGE & LOGIC	80009	670-2808-00
A10	670-2808-01	B200446		CIRCUIT BD ASSY:STORAGE/LOGIC	80009	670-2808-01
A11	670-6002-01			CIRCUIT BD ASSY:FAN MOTOR	80009	670-6002-01
A12	670-3685-00			CIRCUIT BD ASSY:TV SYNC SEPARATOR (OPTION 05 ONLY)	80009	670-3685-00
A13	670-2744-02	B200000	B200947	CIRCUIT BD ASSY:INVERTER	80009	670-2744-02
A13	670-2744-04	B200948		CIRCUIT BD ASSY:INVERTER (OPTION 07 ONLY)	80009	670-2744-04
A14	670-6004-00			CIRCUIT BD ASSY:PROBE CODING	80009	670-6004-00

http://manoman.sqhill.com

Component No.	Tektronix Part No.	Serial/Assembly No. Effective	Dscont	Name & Description	Mfr. Code	Mfr. Part No.
A1	670-3254-03			CIRCUIT BD ASSY:ATTENUATOR (STANDARD, OPTION 04 & 07)	80009	670-3254-03
A1	672-0554-02			CIRCUIT BD ASSY:ATTENUATOR (OPTION 05 ONLY)	80009	672-0554-02
A1	670-3254-02			CIRCUIT BD ASSY:ATTENUATOR (OPTION 05 ONLY)	80009	670-3254-02
A1C9	281-0661-00			CAP,FXD,CER DI:0.8PF,+/-0.1PF,500V (OPTION 05 ONLY)	52763	2RDPLZ007 OP80BC
A1C10	281-0064-00			CAP,VAR,PLASTIC:0.25-1.5PF,600V	52769	ER-530-013
A1C21	283-0000-00			CAP,FXD,CER DI:0.001UF,+100-0%,500V	59660	831-610-Y5U0102P
A1C22	283-0000-00			CAP,FXD,CER DI:0.001UF,+100-0%,500V	59660	831-610-Y5U0102P
A1C30	307-1014-01			ATTENUATOR,FXD:100X ATTEN	80009	307-1014-01
A1C31	----- -----			(FURN AS A SET W/C30)		
A1C32	307-1013-01			ATTENUATOR,FXD:10X ATTEN	80009	307-1013-01
A1C33	----- -----			(FURN AS A SET W/C32)		
A1C34	307-1011-00			ATTENUATOR,FXD:4X	80009	307-1011-00
A1C35	----- -----			(FURN AS A SET W/C34)		
A1C36	307-1010-01			ATTENUATOR,FXD:2X	80009	307-1010-01
A1C37	----- -----			(FURN AS A SET W/C36)		
A1C42	283-0156-00			CAP,FXD,CER DI:0.001 UF,+80-20%,200V	05397	C315C102Z2R5CA
A1J10	131-0679-02			CONN,RCPT,ELEC:BNC,MALE,3 CONTACT	24931	28JR270-1
A1R10	315-0750-00			RES,FXD,FILM:75 OHM,5%,0.25W	57668	NTR25J-E75E0
A1R12	307-0116-00			RES,FXD,CMPSN:9.1 OHM,5%,0.25W (OPTION 05 ONLY)	01121	CB 91G5
A1R14	315-0105-00			RES,FXD,FILM:1M OHM,5%,0.25W	19701	5043CX1M000J
A1R15	315-0220-00			RES,FXD,FILM:22 OHM,5%,0.25W	19701	5043CX22R00J
A1R20	315-0101-00	B200000	B200077	RES,FXD,FILM:100 OHM,5%,0.25W	57668	NTR25J-E 100E
A1R20	315-0103-00	B200078		RES,FXD,FILM:10K OHM,5%,0.25W	19701	5043CX10K00J
A1R31	317-0100-00			RES,FXD,CMPSN:10 OHM,5%,0.125W (NOMINAL VALUE,SELECTED)	01121	BB1005
A1R32	315-0360-00			RES,FXD,FILM:36 OHM,5%,0.25W (NOMINAL VALUE,SELECTED)	19701	5043CX36R00J
A1R33	317-0150-00			RES,FXD,CMPSN:15 OHM,5%,0.125W (NOMINAL VALUE,SELECTED)	01121	BB1505
A1R34	----- -----			(SELECTED)		
A1R34	317-0150-00	B200078		RES,FXD,CMPSN:15 OHM,5%,0.125W	01121	BB1505
A1R36	317-0100-00	B200000	B200077	RES,FXD,CMPSN:10 OHM,5%,0.125W (NOMINAL VALUE,SELECTED)	01121	BB1005
A1R36	317-0220-00	B200078		RES,FXD,CMPSN:22 OHM,5%,0.125W	01121	BB2205
A1R39	321-0481-00			RES,FXD,FILM:1M OHM,1%,0.125W,TC=T0	19701	5043ED1M000F
A1R42	317-0474-00			RES,FXD,CMPSN:470K OHM,5%,0.125W	01121	BB4745
A1R45	315-0300-00			RES,FXD,FILM:30 OHM,5%,0.25W	19701	5043CX30R00J
A1S30	263-1065-00			SW CAM ACTR AS:VOLTS/DIV	80009	263-1065-00

http://manoman.sqhill.com

Component No.	Tektronix Part No.	Serial/Assembly No. Effective	Dscont	Name & Description	Mfr. Code	Mfr. Part No.
A1A1	672-0841-01			CIRCUIT BD ASSY:VERTICAL MODE (INCLUDES A1,A3)	80009	672-0841-01
A1A1C12	285-0816-01			CAP,FXD,PLASTIC:0.019UF,10%,600V	80009	285-0816-01

http://manoman.sghill.com

Component No.	Tektronix Part No.	Serial/Assembly No. Effective	Dscont	Name & Description	Mfr. Code	Mfr. Part No.
A2	670-6301-04			CIRCUIT BD ASSY:VERTICAL PREAMP	80009	670-6301-04
A2C3026	281-0815-00			CAP,FXD,CER DI:0.027UF,20%,50V	04222	MA205C273MAA
A2C3071	281-0813-00			CAP,FXD,CER DI:0.047UF,20%,50V	05397	C412C473M5V2CA
A2C3072	281-0786-00			CAP,FXD,CER DI:150PF,10%,100V	04222	MA101A151KAA
A2C3075	281-0773-00			CAP,FXD,CER DI:0.01UF,10%,100V	04222	MA201C103KAA
A2C3091	281-0773-00			CAP,FXD,CER DI:0.01UF,10%,100V	04222	MA201C103KAA
A2C3095	281-0815-00			CAP,FXD,CER DI:0.027UF,20%,50V	04222	MA205C273MAA
A2C3112	281-0798-00			CAP,FXD,CER DI:51PF,1%,100V	04222	MA101A510GAA
A2C3119	290-0517-00			CAP,FXD,ELCTLT:6.8UF,20%,35V	05397	T368B685M035AZ
A2C3135	290-0517-00			CAP,FXD,ELCTLT:6.8UF,20%,35V	05397	T368B685M035AZ
A2C3142	281-0788-00			CAP,FXD,CER DI:470PF,10%,100V	04222	MA101C471KAA
A2C3144	281-0819-00			CAP,FXD,CER DI:33 PF,5%,50V	04222	GC105A330J
A2C3152	281-0809-00			CAP,FXD,CER DI:200 PF,5%,100V	04222	MA101A201JAA
A2C3173	281-0788-00			CAP,FXD,CER DI:470PF,10%,100V	04222	MA101C471KAA
A2C3192	281-0205-00			CAP,VAR,PLASTIC:5.5-65 PF,100V	TK1727	2222-808-32659
A2C3287	281-0815-00			CAP,FXD,CER DI:0.027UF,20%,50V	04222	MA205C273MAA
A2C3306	281-0579-00			CAP,FXD,CER DI:21PF,5%,500V	52763	2RDPLZ007 21POJC
A2C3334	281-0773-00			CAP,FXD,CER DI:0.01UF,10%,100V	04222	MA201C103KAA
A2C3342	281-0204-00			CAP,VAR,PLASTIC:2-22PF,100V	80031	2807C00222MJ02
A2C3353	281-0809-00			CAP,FXD,CER DI:200 PF,5%,100V	04222	MA101A201JAA
A2C3384	281-0815-00			CAP,FXD,CER DI:0.027UF,20%,50V	04222	MA205C273MAA
A2C3385	281-0815-00			CAP,FXD,CER DI:0.027UF,20%,50V	04222	MA205C273MAA
A2C3396	290-0517-00			CAP,FXD,ELCTLT:6.8UF,20%,35V	05397	T368B685M035AZ
A2C3398	281-0547-00			CAP,FXD,CER DI:2.7PF,+/-0.25PF,500V	52763	2RDPLZ007 2P7OCC
A2C3405	281-0589-00			CAP,FXD,CER DI:170PF,5%,500V	52763	2RDPLZ007170PJK
A2C3422	281-0788-00			CAP,FXD,CER DI:470PF,10%,100V	04222	MA101C471KAA
A2C3462	290-0517-00			CAP,FXD,ELCTLT:6.8UF,20%,35V	05397	T368B685M035AZ
A2C3464	290-0517-00			CAP,FXD,ELCTLT:6.8UF,20%,35V	05397	T368B685M035AZ
A2C3466	290-0517-00			CAP,FXD,ELCTLT:6.8UF,20%,35V	05397	T368B685M035AZ
A2C3517	281-0773-00			CAP,FXD,CER DI:0.01UF,10%,100V	04222	MA201C103KAA
A2C3521	281-0788-00			CAP,FXD,CER DI:470PF,10%,100V	04222	MA101C471KAA
A2C3525	290-0527-00			CAP,FXD,ELCTLT:15UF,20%,20V	05397	T368B156M020AS
A2C3586	281-0788-00			CAP,FXD,CER DI:470PF,10%,100V	04222	MA101C471KAA
A2C3587	281-0786-00			CAP,FXD,CER DI:150PF,10%,100V	04222	MA101A151KAA
A2C3592	281-0773-00			CAP,FXD,CER DI:0.01UF,10%,100V	04222	MA201C103KAA
A2C3597	281-0815-00			CAP,FXD,CER DI:0.027UF,20%,50V	04222	MA205C273MAA
A2C3611	281-0814-00			CAP,FXD,CER DI:100 PF,10%,100V	04222	MA101A101KAA
A2C3615	281-0814-00			CAP,FXD,CER DI:100 PF,10%,100V	04222	MA101A101KAA
A2C3623	281-0814-00			CAP,FXD,CER DI:100 PF,10%,100V	04222	MA101A101KAA
A2C3643	281-0204-00			CAP,VAR,PLASTIC:2-22PF,100V	80031	2807C00222MJ02
A2C3647	281-0809-00			CAP,FXD,CER DI:200 PF,5%,100V	04222	MA101A201JAA
A2C3682	281-0773-00			CAP,FXD,CER DI:0.01UF,10%,100V	04222	MA201C103KAA
A2C3683	281-0813-00			CAP,FXD,CER DI:0.047UF,20%,50V	05397	C412C473M5V2CA
A2C3690	281-0205-00			CAP,VAR,PLASTIC:5.5-65 PF,100V	TK1727	2222-808-32659
A2C3714	281-0814-00			CAP,FXD,CER DI:100 PF,10%,100V	04222	MA101A101KAA
A2C3723	281-0814-00			CAP,FXD,CER DI:100 PF,10%,100V	04222	MA101A101KAA
A2C3726	281-0814-00			CAP,FXD,CER DI:100 PF,10%,100V	04222	MA101A101KAA
A2C3734	290-0527-00			CAP,FXD,ELCTLT:15UF,20%,20V	05397	T368B156M020AS
A2C3787	281-0815-00			CAP,FXD,CER DI:0.027UF,20%,50V	04222	MA205C273MAA
A2C3804	281-0630-00			CAP,FXD,CER DI:390PF,5%,500V	52763	2RDPLZ007 390PMO
A2C3813	281-0809-00			CAP,FXD,CER DI:200 PF,5%,100V	04222	MA101A201JAA
A2C3822	281-0763-00			CAP,FXD,CER DI:47PF,10%,100V	04222	MA101A470KAA
A2C3827	281-0798-00			CAP,FXD,CER DI:51PF,1%,100V	04222	MA101A510GAA
A2C3832	290-0517-00			CAP,FXD,ELCTLT:6.8UF,20%,35V	05397	T368B685M035AZ
A2C3846	281-0812-00			CAP,FXD,CER DI:1000PF,10%,100V	04222	MA101C102KAA
A2C3848	281-0759-00			CAP,FXD,CER DI:22PF,10%,100V	04222	MA101A220KAA
A2C3854	281-0809-00			CAP,FXD,CER DI:200 PF,5%,100V	04222	MA101A201JAA
A2C3854	281-0815-00			CAP,FXD,CER DI:0.027UF,20%,50V	04222	MA205C273MAA

http://manoman.sqhill.com

Component No.	Tektronix Part No.	Serial/Assembly No. Effective	Dscont	Name & Description	Mfr. Code	Mfr. Part No.
A2C3860	281-0775-00			CAP,FXD,CER DI:0.1UF,20%,50V	04222	MA205E104MAA
A2C3886	281-0815-00			CAP,FXD,CER DI:0.027UF,20%,50V	04222	MA205C273MAA
A2C3894	290-0517-00			CAP,FXD,ELCTLT:6.8UF,20%,35V	05397	T368B685M035AZ
A2C3896	281-0547-00			CAP,FXD,CER DI:2.7PF,+/-0.25PF,500V	52763	2RDPLZ007 2P70CC
A2C3906	281-0814-00			CAP,FXD,CER DI:100 PF,10%,100V	04222	MA101A101KAA
A2C3911	281-0773-00			CAP,FXD,CER DI:0.01UF,10%,100V	04222	MA201C103KAA
A2C3912	290-0517-00			CAP,FXD,ELCTLT:6.8UF,20%,35V	05397	T368B685M035AZ
A2C3943	281-0788-00			CAP,FXD,CER DI:470PF,10%,100V	04222	MA101C471KAA
A2CR3013	152-0141-02			SEMICOND DVC,DI:SW,SI,30V,150MA,30V,DO-35	03508	DA2527 (1N4152)
A2CR3014	152-0141-02			SEMICOND DVC,DI:SW,SI,30V,150MA,30V,DO-35	03508	DA2527 (1N4152)
A2CR3015	152-0141-02			SEMICOND DVC,DI:SW,SI,30V,150MA,30V,DO-35	03508	DA2527 (1N4152)
A2CR3023	152-0141-02			SEMICOND DVC,DI:SW,SI,30V,150MA,30V,DO-35	03508	DA2527 (1N4152)
A2CR3024	152-0141-02			SEMICOND DVC,DI:SW,SI,30V,150MA,30V,DO-35	03508	DA2527 (1N4152)
A2CR3034	152-0141-02			SEMICOND DVC,DI:SW,SI,30V,150MA,30V,DO-35	03508	DA2527 (1N4152)
A2CR3193	152-0141-02			SEMICOND DVC,DI:SW,SI,30V,150MA,30V,DO-35	03508	DA2527 (1N4152)
A2CR3263	152-0612-00			SEMICOND DVC,DI:VVC,SI,50V,17.5PF,DO-7	04713	SMV 1561
A2CR3264	152-0612-00			SEMICOND DVC,DI:VVC,SI,50V,17.5PF,DO-7	04713	SMV 1561
A2CR3298	152-0323-00			SEMICOND DVC,DI:SW,SI,35V,0.1A,DO-7	14433	WG1518
A2CR3312	152-0141-02			SEMICOND DVC,DI:SW,SI,30V,150MA,30V,DO-35	03508	DA2527 (1N4152)
A2CR3327	152-0141-02			SEMICOND DVC,DI:SW,SI,30V,150MA,30V,DO-35	03508	DA2527 (1N4152)
A2CR3432	152-0322-00	B200000	B201763	SEMICOND DVC,DI:SCHOTTKY,SI,15V,DO-35	50434	5082-2672
A2CR3432	152-0951-00	B201764		SEMICOND DVC DI:SI,SCHOTTKY,60V,2.2PF (466)	50434	IN6263
A2CR3432	152-0322-00	B200000	B201465	SEMICOND DVC,DI:SCHOTTKY,SI,15V,DO-35	50434	5082-2672
A2CR3432	152-0951-00	B201466		SEMICOND DVC DI:SI,SCHOTTKY,60V,2.2PF (466DM44)	50434	IN6263
A2CR3434	152-0322-00	B200000	B201763	SEMICOND DVC,DI:SCHOTTKY,SI,15V,DO-35	50434	5082-2672
A2CR3434	152-0951-00	B201764		SEMICOND DVC DI:SI,SCHOTTKY,60V,2.2PF (466)	50434	IN6263
A2CR3434	152-0322-00	B200000	B201465	SEMICOND DVC,DI:SCHOTTKY,SI,15V,DO-35	50434	5082-2672
A2CR3434	152-0951-00	B201466		SEMICOND DVC DI:SI,SCHOTTKY,60V,2.2PF (466DM44)	50434	IN6263
A2CR3436	152-0322-00	B200000	B201763	SEMICOND DVC,DI:SCHOTTKY,SI,15V,DO-35	50434	5082-2672
A2CR3436	152-0951-00	B201764		SEMICOND DVC DI:SI,SCHOTTKY,60V,2.2PF (466)	50434	IN6263
A2CR3436	152-0322-00	B200000	B201465	SEMICOND DVC,DI:SCHOTTKY,SI,15V,DO-35	50434	5082-2672
A2CR3436	152-0951-00	B201466		SEMICOND DVC DI:SI,SCHOTTKY,60V,2.2PF (466DM44)	50434	IN6263
A2CR3438	152-0322-00	B200000	B201763	SEMICOND DVC,DI:SCHOTTKY,SI,15V,DO-35	50434	5082-2672
A2CR3438	152-0951-00	B201764		SEMICOND DVC DI:SI,SCHOTTKY,60V,2.2PF (466)	50434	IN6263
A2CR3438	152-0322-00	B200000	B201465	SEMICOND DVC,DI:SCHOTTKY,SI,15V,DO-35	50434	5082-2672
A2CR3438	152-0951-00	B201466		SEMICOND DVC DI:SI,SCHOTTKY,60V,2.2PF (466DM44)	50434	IN6263
A2CR3441	152-0322-00	B200000	B201763	SEMICOND DVC,DI:SCHOTTKY,SI,15V,DO-35	50434	5082-2672
A2CR3441	152-0951-00	B201764		SEMICOND DVC DI:SI,SCHOTTKY,60V,2.2PF (466)	50434	IN6263
A2CR3441	152-0322-00	B200000	B201465	SEMICOND DVC,DI:SCHOTTKY,SI,15V,DO-35	50434	5082-2672
A2CR3441	152-0951-00	B201466		SEMICOND DVC DI:SI,SCHOTTKY,60V,2.2PF (466DM44)	50434	IN6263
A2CR3443	152-0322-00	B200000	B201763	SEMICOND DVC,DI:SCHOTTKY,SI,15V,DO-35	50434	5082-2672
A2CR3443	152-0951-00	B201764		SEMICOND DVC DI:SI,SCHOTTKY,60V,2.2PF (466)	50434	IN6263
A2CR3443	152-0322-00	B200000	B201465	SEMICOND DVC,DI:SCHOTTKY,SI,15V,DO-35	50434	5082-2672
A2CR3443	152-0951-00	B201466		SEMICOND DVC DI:SI,SCHOTTKY,60V,2.2PF (466DM44)	50434	IN6263
A2CR3445	152-0322-00	B200000	B201763	SEMICOND DVC,DI:SCHOTTKY,SI,15V,DO-35	50434	5082-2672
A2CR3445	152-0951-00	B201764		SEMICOND DVC DI:SI,SCHOTTKY,60V,2.2PF (466)	50434	IN6263
A2CR3445	152-0322-00	B200000	B201465	SEMICOND DVC,DI:SCHOTTKY,SI,15V,DO-35	50434	5082-2672

http://manoman.sqhill.com

Component No.	Tektronix Part No.	Serial/Assembly No. Effective	Dscont	Name & Description	Mfr. Code	Mfr. Part No.
A2CR3445	152-0951-00	B201466		SEMICOND DVC DI:SI,SCHOTTKY,60V,2.2PF (466DM44)	50434	IN6263
A2CR3447	152-0322-00	B200000	B201763	SEMICOND DVC,DI:SCHOTTKY,SI,15V,DO-35	50434	5082-2672
A2CR3447	152-0951-00	B201764		SEMICOND DVC DI:SI,SCHOTTKY,60V,2.2PF (466)	50434	IN6263
A2CR3447	152-0322-00	B200000	B201465	SEMICOND DVC,DI:SCHOTTKY,SI,15V,DO-35	50434	5082-2672
A2CR3447	152-0951-00	B201466		SEMICOND DVC DI:SI,SCHOTTKY,60V,2.2PF (466DM44)	50434	IN6263
A2CR3529	152-0141-02			SEMICOND DVC,DI:SW,SI,30V,150MA,30V,DO-35	03508	DA2527 (1N4152)
A2CR3541	152-0322-00	B200000	B201763	SEMICOND DVC,DI:SCHOTTKY,SI,15V,DO-35	50434	5082-2672
A2CR3541	152-0951-00	B201764		SEMICOND DVC DI:SI,SCHOTTKY,60V,2.2PF (466)	50434	IN6263
A2CR3541	152-0322-00	B200000	B201465	SEMICOND DVC,DI:SCHOTTKY,SI,15V,DO-35	50434	5082-2672
A2CR3541	152-0951-00	B201466		SEMICOND DVC DI:SI,SCHOTTKY,60V,2.2PF (466DM44)	50434	IN6263
A2CR3543	152-0322-00	B200000	B201763	SEMICOND DVC,DI:SCHOTTKY,SI,15V,DO-35	50434	5082-2672
A2CR3543	152-0951-00	B201764		SEMICOND DVC DI:SI,SCHOTTKY,60V,2.2PF (466)	50434	IN6263
A2CR3543	152-0322-00	B200000	B201465	SEMICOND DVC,DI:SCHOTTKY,SI,15V,DO-35	50434	5082-2672
A2CR3543	152-0951-00	B201466		SEMICOND DVC DI:SI,SCHOTTKY,60V,2.2PF (466DM44)	50434	IN6263
A2CR3545	152-0322-00	B200000	B201763	SEMICOND DVC,DI:SCHOTTKY,SI,15V,DO-35	50434	5082-2672
A2CR3545	152-0951-00	B201764		SEMICOND DVC DI:SI,SCHOTTKY,60V,2.2PF (466)	50434	IN6263
A2CR3545	152-0322-00	B200000	B201465	SEMICOND DVC,DI:SCHOTTKY,SI,15V,DO-35	50434	5082-2672
A2CR3545	152-0951-00	B201466		SEMICOND DVC DI:SI,SCHOTTKY,60V,2.2PF (466DM44)	50434	IN6263
A2CR3547	152-0322-00	B200000	B201763	SEMICOND DVC,DI:SCHOTTKY,SI,15V,DO-35	50434	5082-2672
A2CR3547	152-0951-00	B201764		SEMICOND DVC DI:SI,SCHOTTKY,60V,2.2PF (466)	50434	IN6263
A2CR3547	152-0322-00	B200000	B201465	SEMICOND DVC,DI:SCHOTTKY,SI,15V,DO-35	50434	5082-2672
A2CR3547	152-0951-00	B201466		SEMICOND DVC DI:SI,SCHOTTKY,60V,2.2PF (466DM44)	50434	IN6263
A2CR3693	152-0141-02			SEMICOND DVC,DI:SW,SI,30V,150MA,30V,DO-35	03508	DA2527 (1N4152)
A2CR3727	152-0141-02			SEMICOND DVC,DI:SW,SI,30V,150MA,30V,DO-35	03508	DA2527 (1N4152)
A2CR3763	152-0612-00			SEMICOND DVC,DI:VVC,SI,50V,17.5PF,DO-7	04713	SMV 1561
A2CR3764	152-0612-00			SEMICOND DVC,DI:VVC,SI,50V,17.5PF,DO-7	04713	SMV 1561
A2CR3796	152-0323-00			SEMICOND DVC,DI:SW,SI,35V,0.1A,DO-7	14433	WG1518
A2CR3818	152-0141-02			SEMICOND DVC,DI:SW,SI,30V,150MA,30V,DO-35	03508	DA2527 (1N4152)
A2CR3918	152-0141-02			SEMICOND DVC,DI:SW,SI,30V,150MA,30V,DO-35	03508	DA2527 (1N4152)
A2CR3936	152-0141-02			SEMICOND DVC,DI:SW,SI,30V,150MA,30V,DO-35	03508	DA2527 (1N4152)
A2J3505	131-0608-00			TERMINAL,PIN:0.365 L X 0.025 BRZ GLD PL (QUANTITY OF 7)	22526	48283-036
A2J3920	131-0608-00			TERMINAL,PIN:0.365 L X 0.025 BRZ GLD PL (QUANTITY OF 3)	22526	48283-036
A2L3245	108-0433-00			COIL,RF:FIXED,90NH	TK1345	108-0433-00
A2L3412	108-0182-00			COIL,RF:FIXED,293NH	80009	108-0182-00
A2L3512	108-0182-00			COIL,RF:FIXED,293NH	80009	108-0182-00
A2L3642	108-0433-00			COIL,RF:FIXED,90NH	TK1345	108-0433-00
A2Q3004	151-0190-00			TRANSISTOR:NPN,SI,TO-92	80009	151-0190-00
A2Q3028	151-0221-00			TRANSISTOR:PNP,SI,TO-92	80009	151-0221-00
A2Q3038	151-0271-00			TRANSISTOR:PNP,SI,TO-92	04713	SPS8236
A2Q3045	151-0271-00			TRANSISTOR:PNP,SI,TO-92	04713	SPS8236
A2Q3062	151-0190-00			TRANSISTOR:NPN,SI,TO-92	80009	151-0190-00
A2Q3118	151-0188-00			TRANSISTOR:PNP,SI,TO-92	80009	151-0188-00
A2Q3125	151-0221-00			TRANSISTOR:PNP,SI,TO-92	80009	151-0221-00
A2Q3145	151-0271-00			TRANSISTOR:PNP,SI,TO-92	04713	SPS8236
A2Q3150	151-0221-00			TRANSISTOR:PNP,SI,TO-92	80009	151-0221-00
A2Q3155	151-0434-00			TRANSISTOR:PNP,SI,TO-72	04713	SS7144
A2Q3175	151-0198-00			TRANSISTOR:SELECTED	04713	SPS8802-1

http://manoman.sqhill.com

Component No.	Tektronix Part No.	Serial/Assembly No. Effective	Dscont	Name & Description	Mfr. Code	Mfr. Part No.
A2Q3215	151-0198-00			TRANSISTOR:SELECTED	04713	SPS8802-1
A2Q3225	151-0221-00			TRANSISTOR:PNP,SI,TO-92	80009	151-0221-00
A2Q3235	151-0221-00			TRANSISTOR:PNP,SI,TO-92	80009	151-0221-00
A2Q3250	151-0221-00			TRANSISTOR:PNP,SI,TO-92	80009	151-0221-00
A2Q3297	151-1090-00			TRANSISTOR:FET,DUAL,N CHANNEL,SI	80009	151-1090-00
A2Q3344	151-0221-00			TRANSISTOR:PNP,SI,TO-92	80009	151-0221-00
A2Q3346	151-0221-00			TRANSISTOR:PNP,SI,TO-92	80009	151-0221-00
A2Q3355	151-0434-00			TRANSISTOR:PNP,SI,TO-72	04713	SS7144
A2Q3375	151-0198-00			TRANSISTOR:SELECTED	04713	SPS8802-1
A2Q3426	151-0472-00			TRANSISTOR:NPN,SI,TO-92	51984	NE41632B
A2Q3428	151-0472-00			TRANSISTOR:NPN,SI,TO-92	51984	NE41632B
A2Q3555	151-0190-00			TRANSISTOR:NPN,SI,TO-92	80009	151-0190-00
A2Q3617	151-0188-00			TRANSISTOR:PNP,SI,TO-92	80009	151-0188-00
A2Q3619	151-0188-00			TRANSISTOR:PNP,SI,TO-92	80009	151-0188-00
A2Q3636	151-0367-00			TRANSISTOR:NPN,SI,X-55	04713	SPS 8811
A2Q3644	151-0221-00			TRANSISTOR:PNP,SI,TO-92	80009	151-0221-00
A2Q3646	151-0221-00			TRANSISTOR:PNP,SI,TO-92	80009	151-0221-00
A2Q3655	151-0434-00			TRANSISTOR:PNP,SI,TO-72	04713	SS7144
A2Q3675	151-0198-00			TRANSISTOR:SELECTED	04713	SPS8802-1
A2Q3698	151-1090-00			TRANSISTOR:FET,DUAL,N CHANNEL,SI	80009	151-1090-00
A2Q3719	151-0188-00			TRANSISTOR:PNP,SI,TO-92	80009	151-0188-00
A2Q3746	151-0221-00			TRANSISTOR:PNP,SI,TO-92	80009	151-0221-00
A2Q3812	151-0188-00			TRANSISTOR:PNP,SI,TO-92	80009	151-0188-00
A2Q3833	151-0221-00			TRANSISTOR:PNP,SI,TO-92	80009	151-0221-00
A2Q3845	151-0271-00			TRANSISTOR:PNP,SI,TO-92	04713	SPS8236
A2Q3855	151-0434-00			TRANSISTOR:PNP,SI,TO-72	04713	SS7144
A2Q3875	151-0198-00			TRANSISTOR:SELECTED	04713	SPS8802-1
A2Q3938	151-0271-00			TRANSISTOR:PNP,SI,TO-92	04713	SPS8236
A2Q3948	151-0271-00			TRANSISTOR:PNP,SI,TO-92	04713	SPS8236
A2Q3954	151-0221-00			TRANSISTOR:PNP,SI,TO-92	80009	151-0221-00
A2R3015	315-0472-00			RES,FXD,FILM:4.7K OHM,5%,0.25W	57668	NTR25J-E04K7
A2R3016	321-0064-00			RES,FXD,FILM:45.3 OHM,0.5%,0.125W,TC=T0	91637	CMF55116G45R30F
A2R3032	321-0201-00			RES,FXD,FILM:1.21K OHM,1%,0.125W,TC=T0	19701	5043ED1K210F
A2R3033	315-0331-00			RES,FXD,FILM:330 OHM,5%,0.25W	57668	NTR25J-E330E
A2R3035	315-0470-00			RES,FXD,FILM:47 OHM,5%,0.25W	57668	NTR25J-E47E0
A2R3042	315-0431-00			RES,FXD,FILM:430 OHM,5%,0.25W	19701	5043CX430R0J
A2R3052	315-0101-00			RES,FXD,FILM:100 OHM,5%,0.25W	57668	NTR25J-E 100E
A2R3055	311-1311-00			RES,VAR,NONWW:PNL,1K OHM,0.5W	01121	73U4G048L102M
A2R3064	321-0190-00			RES,FXD,FILM:931 OHM,1%,0.125W,TC=T2	19701	5043ED931R0F
A2R3072	315-0112-00			RES,FXD,FILM:1.1K OHM,5%,0.25W	19701	5043CX1K100J
A2R3081	321-0641-00			RES,FXD,FILM:1.8K OHM,1%,0.125W,TC=T0	91637	MFF1816G18C00F
A2R3082	321-0641-00			RES,FXD,FILM:1.8K OHM,1%,0.125W,TC=T0	91637	MFF1816G18C00F
A2R3087	315-0470-00			RES,FXD,FILM:47 OHM,5%,0.25W	57668	NTR25J-E47E0
A2R3095	321-0030-00			RES,FXD,FILM:20.0 OHM,1%,0.125W,TC=T0	57668	CRB14FXE 20 OHM
A2R3096	315-0241-00			RES,FXD,FILM:240 OHM,5%,0.25W	19701	5043CX240R0J
A2R3106	321-0064-00			RES,FXD,FILM:45.3 OHM,0.5%,0.125W,TC=T0	91637	CMF55116G45R30F
A2R3107	321-0068-00			RES,FXD,FILM:49.9 OHM,0.5%,0.125W,TC=T0	91637	CMF55116G49R90F
A2R3108	321-0126-00			RES,FXD,FILM:200 OHM,1%,0.125W,TC=T0	19701	5033ED200R0F
A2R3116	315-0751-00			RES,FXD,FILM:750 OHM,5%,0.25W	57668	NTR25J-E750E
A2R3117	315-0331-00			RES,FXD,FILM:330 OHM,5%,0.25W	57668	NTR25J-E330E
A2R3126	311-1565-00			RES,VAR,NONWW:TRMR,250 OHM,0.5W	32997	3352T-1-251
A2R3135	311-1558-00			RES,VAR,NONWW:TRMR,20K OHM,0.5W	32997	3352T-1-203
A2R3136	315-0331-00			RES,FXD,FILM:330 OHM,5%,0.25W	57668	NTR25J-E330E
A2R3143	321-0192-00			RES,FXD,FILM:976 OHM,1%,0.125W,TC=T0	19701	5033ED976R0F
A2R3144	321-0126-00			RES,FXD,FILM:200 OHM,1%,0.125W,TC=T0	19701	5033ED200R0F
A2R3147	315-0390-00			RES,FXD,FILM:39 OHM,5%,0.25W	57668	NTR25J-E39E0
A2R3148	315-0222-00			RES,FXD,FILM:2.2K OHM,5%,0.25W	57668	NTR25J-E02K2
A2R3159	321-0126-00			RES,FXD,FILM:200 OHM,1%,0.125W,TC=T0	19701	5033ED200R0F

http://manoman.sqhill.com

Component No.	Tektronix Part No.	Serial/Assembly No. Effective	Dscont	Name & Description	Mfr. Code	Mfr. Part No.
A2R3168	315-0183-00			RES,FXD,FILM:18K OHM,5%,0.25W	19701	5043CX18K00J
A2R3173	315-0241-00			RES,FXD,FILM:240 OHM,5%,0.25W	19701	5043CX240R0J
A2R3176	311-1560-00			RES,VAR,NONWW:TRMR,5K OHM,0.5W	32997	3352T-1-502
A2R3185	311-1560-00			RES,VAR,NONWW:TRMR,5K OHM,0.5W	32997	3352T-1-502
A2R3186	315-0470-00			RES,FXD,FILM:47 OHM,5%,0.25W	57668	NTR25J-E47E0
A2R3188	315-0470-00			RES,FXD,FILM:47 OHM,5%,0.25W	57668	NTR25J-E47E0
A2R3190	311-1567-00			RES,VAR,NONWW:TRMR,100 OHM,0.5W	32997	3352T-1-101
A2R3202	311-1564-00			RES,VAR,NONWW:TRMR,500 OHM,0.5W	32997	3352T-CK5501
A2R3205	321-0206-00			RES,FXD,FILM:1.37K OHM,1%,0.125W,TC=T0	07716	CEAD13700F
A2R3206	321-0177-00			RES,FXD,FILM:681 OHM,1%,0.125W,TC=T0	07716	CEAD681R0F
A2R3207	315-0271-00			RES,FXD,FILM:270 OHM,5%,0.25W	57668	NTR25J-E270E
A2R3208	323-0156-00			RES,FXD,FILM:412 OHM,1%,0.5W,TC=T0	75042	CECT0-4120F
A2R3216	315-0511-00			RES,FXD,FILM:510 OHM,5%,0.25W	19701	5043CX510R0J
A2R3232	315-0430-00			RES,FXD,FILM:43 OHM,5%,0.25W	19701	5043CX43R00J
A2R3233	315-0512-00			RES,FXD,FILM:5.1K OHM,5%,0.25W	57668	NTR25J-E05K1
A2R3234	321-0196-00			RES,FXD,FILM:1.07K OHM,1%,0.125W,TC=T0	07716	CEAD10700F
A2R3242	321-0192-00			RES,FXD,FILM:976 OHM,1%,0.125W,TC=T0	19701	5033ED976R0F
A2R3243	315-0392-00			RES,FXD,FILM:3.9K OHM,5%,0.25W	57668	NTR25J-E03K9
A2R3244	315-0392-00			RES,FXD,FILM:3.9K OHM,5%,0.25W	57668	NTR25J-E03K9
A2R3246	315-0390-00			RES,FXD,FILM:39 OHM,5%,0.25W	57668	NTR25J-E39E0
A2R3247	315-0222-00			RES,FXD,FILM:2.2K OHM,5%,0.25W	57668	NTR25J-E02K2
A2R3252	321-0170-00			RES,FXD,FILM:576 OHM,1%,0.125W,TC=T0	07716	CEAD576R0F
A2R3253	321-0170-00			RES,FXD,FILM:576 OHM,1%,0.125W,TC=T0	07716	CEAD576R0F
A2R3254	321-0089-00			RES,FXD,FILM:82.5 OHM,1%,0.125W,TC=T0	91637	CMF55116G82R50F
A2R3256	315-0100-00			RES,FXD,FILM:10 OHM,5%,0.25W	19701	5043CX10RR00J
A2R3258	315-0100-00			RES,FXD,FILM:10 OHM,5%,0.25W	19701	5043CX10RR00J
A2R3274	315-0301-00			RES,FXD,FILM:300 OHM,5%,0.25W	57668	NTR25J-E300E
A2R3275	321-0181-00			RES,FXD,FILM:750 OHM,1%,0.125W,TC=T0	07716	CEAD750R0F
A2R3276	321-0181-00			RES,FXD,FILM:750 OHM,1%,0.125W,TC=T0	07716	CEAD750R0F
A2R3278	315-0270-00			RES,FXD,FILM:27 OHM,5%,0.25W	19701	5043CX27R00J
A2R3285	311-1403-00			RES,VAR,NONWW:PNL,5K OHM,1W,W/SW	01121	18M651
A2R3296	321-0030-00			RES,FXD,FILM:20.0 OHM,1%,0.125W,TC=T0	57668	CRB14FXE 20 OHM
A2R3299	315-0511-00			RES,FXD,FILM:510 OHM,5%,0.25W	19701	5043CX510R0J
A2R3311	321-0049-00			RES,FXD,FILM:31.6 OHM,1%,0.125W,TC=T0	91637	CMF55116G31R60F
A2R3314	321-0065-00			RES,FXD,FILM:46.4 OHM,1%,0.125W,TC=T0	57668	RB14FXE 46E4
A2R3326	315-0430-00			RES,FXD,FILM:43 OHM,5%,0.25W	19701	5043CX43R00J
A2R3328	321-0126-00			RES,FXD,FILM:200 OHM,1%,0.125W,TC=T0	19701	5033ED200R0F
A2R3333	315-0821-00			RES,FXD,FILM:820 OHM,5%,0.25W	19701	5043CX820R0J
A2R3334	315-0821-00			RES,FXD,FILM:820 OHM,5%,0.25W	19701	5043CX820R0J
A2R3335	311-1563-00			RES,VAR,NONWW:TRMR,1K OHM,0.5W	32997	3352T-DY7-102
A2R3353	315-0241-00			RES,FXD,FILM:240 OHM,5%,0.25W	19701	5043CX240R0J
A2R3358	321-0126-00			RES,FXD,FILM:200 OHM,1%,0.125W,TC=T0	19701	5033ED200R0F
A2R3376	315-0301-00			RES,FXD,FILM:300 OHM,5%,0.25W	57668	NTR25J-E300E
A2R3382	315-0470-00			RES,FXD,FILM:47 OHM,5%,0.25W	57668	NTR25J-E47E0
A2R3384	315-0101-00			RES,FXD,FILM:100 OHM,5%,0.25W (FURN AS A SET W/S3285)	57668	NTR25J-E 100E
A2R3385	315-0101-00			RES,FXD,FILM:100 OHM,5%,0.25W	57668	NTR25J-E 100E
A2R3391	315-0151-00			RES,FXD,FILM:150 OHM,5%,0.25W	57668	NTR25J-E150E
A2R3392	315-0103-00			RES,FXD,FILM:10K OHM,5%,0.25W	19701	5043CX10K00J
A2R3422	315-0750-00			RES,FXD,FILM:75 OHM,5%,0.25W	57668	NTR25J-E75E0
A2R3438	315-0302-00			RES,FXD,FILM:3K OHM,5%,0.25W	57668	NTR25J-E03K0
A2R3439	315-0302-00			RES,FXD,FILM:3K OHM,5%,0.25W	57668	NTR25J-E03K0
A2R3448	315-0511-00			RES,FXD,FILM:510 OHM,5%,0.25W	19701	5043CX510R0J
A2R3449	315-0751-00			RES,FXD,FILM:750 OHM,5%,0.25W	57668	NTR25J-E750E
A2R3482	311-1561-00			RES,VAR,NONWW:TRMR,2.5K OHM,0.5W	32997	3352T-DY7-252
A2R3484	311-1559-00			RES,VAR,NONWW:TRMR,10K OHM,0.5W (FURN AS A SET W/S3285)	32997	3352T-1-103
A2R3486	321-0307-00			RES,FXD,FILM:15.4K OHM,1%,0.125W,TC=T0	19701	5043ED15K40F

http://manoman.sqhill.com

Component No.	Tektronix Part No.	Serial/Assembly No. Effective	Dscont	Name & Description	Mfr. Code	Mfr. Part No.
A2R3487	321-0239-00			RES,FXD,FILM:3.01K OHM,1%,0.125W,TC=T0	19701	5043ED3K010F
A2R3488	321-0277-00			RES,FXD,FILM:7.50K OHM,1%,0.125W,TC=T0	24546	NA55D7501F
A2R3514	321-0065-00			RES,FXD,FILM:46.4 OHM,1%,0.125W,TC=T0	57668	RB14FXE 46E4
A2R3516	323-0161-00			RES,FXD,FILM:464 OHM,1%,0.5W,TC=T0	75042	CECT0-4640F
A2R3521	315-0750-00			RES,FXD,FILM:75 OHM,5%,0.25W	57668	NTR25J-E75E0
A2R3522	321-0126-00			RES,FXD,FILM:200 OHM,1%,0.125W,TC=T0	19701	5033ED200R0F
A2R3532	321-0186-00			RES,FXD,FILM:845 OHM,1%,0.125W,TC=T0	19701	5043ED845R0F
A2R3534	321-0186-00			RES,FXD,FILM:845 OHM,1%,0.125W,TC=T0	19701	5043ED845R0F
A2R3536	321-0133-00			RES,FXD,FILM:237 OHM,1%,0.125W,TC=T0	07716	CEAD237R0F
A2R3538	321-0133-00			RES,FXD,FILM:237 OHM,1%,0.125W,TC=T0	07716	CEAD237R0F
A2R3548	315-0751-00			RES,FXD,FILM:750 OHM,5%,0.25W	57668	NTR25J-E750E
A2R3549	315-0511-00			RES,FXD,FILM:510 OHM,5%,0.25W	19701	5043CX510R0J
A2R3558	311-1311-00			RES,VAR,NONWW:PNL,1K OHM,0.5W	01121	73U4G048L102M
A2R3562	321-0190-00			RES,FXD,FILM:931 OHM,1%,0.125W,TC=T2	19701	5043ED931R0F
A2R3579	321-0641-00			RES,FXD,FILM:1.8K OHM,1%,0.125W,TC=T0	91637	MFF1816G18000F
A2R3580	311-1560-00			RES,VAR,NONWW:TRMR,5K OHM,0.5W	32997	3352T-1-502
A2R3582	311-1560-00			RES,VAR,NONWW:TRMR,5K OHM,0.5W	32997	3352T-1-502
A2R3586	315-0241-00			RES,FXD,FILM:240 OHM,5%,0.25W	19701	5043CX240R0J
A2R3587	315-0112-00			RES,FXD,FILM:1.1K OHM,5%,0.25W	19701	5043CX1K100J
A2R3589	315-0470-00			RES,FXD,FILM:47 OHM,5%,0.25W	57668	NTR25J-E47E0
A2R3590	321-0641-00			RES,FXD,FILM:1.8K OHM,1%,0.125W,TC=T0	91637	MFF1816G18000F
A2R3597	315-0241-00			RES,FXD,FILM:240 OHM,5%,0.25W	19701	5043CX240R0J
A2R3612	321-0229-00			RES,FXD,FILM:2.37K OHM,1%,0.125W,TC=T0	19701	5043ED2K37F
A2R3612	315-0752-00			RES,FXD,FILM:7.5K OHM,5%,0.25W	57668	NTR25J-E07K5
A2R3613	315-0103-00			RES,FXD,FILM:10K OHM,5%,0.25W	19701	5043CX10K00J
A2R3616	315-0752-00			RES,FXD,FILM:7.5K OHM,5%,0.25W	57668	NTR25J-E07K5
A2R3622	321-0151-00			RES,FXD,FILM:365 OHM,1%,0.125W,TC=T0	07716	CEAD365R0F
A2R3624	321-0145-00			RES,FXD,FILM:316 OHM,1%,0.125W,TC=T0	07716	CEAD316R0F
A2R3625	321-0151-00			RES,FXD,FILM:365 OHM,1%,0.125W,TC=T0	07716	CEAD365R0F
A2R3626	321-0145-00			RES,FXD,FILM:316 OHM,1%,0.125W,TC=T0	07716	CEAD316R0F
A2R3632	323-0106-00			RES,FXD,FILM:124 OHM,1%,0.5W,TC=T0	24546	NA65D1240G
A2R3634	311-1563-00			RES,VAR,NONWW:TRMR,1K OHM,0.5W	32997	3352T-DY7-102
A2R3645	315-0392-00			RES,FXD,FILM:3.9K OHM,5%,0.25W	57668	NTR25J-E03K9
A2R3647	315-0241-00			RES,FXD,FILM:240 OHM,5%,0.25W	19701	5043CX240R0J
A2R3661	321-0126-00			RES,FXD,FILM:200 OHM,1%,0.125W,TC=T0	19701	5033ED200R0F
A2R3683	315-0470-00			RES,FXD,FILM:47 OHM,5%,0.25W	57668	NTR25J-E47E0
A2R3684	315-0470-00			RES,FXD,FILM:47 OHM,5%,0.25W	57668	NTR25J-E47E0
A2R3685	311-1567-00			RES,VAR,NONWW:TRMR,100 OHM,0.5W	32997	3352T-1-101
A2R3687	315-0270-00			RES,FXD,FILM:27 OHM,5%,0.25W	19701	5043CX27R00J
A2R3695	321-0030-00			RES,FXD,FILM:20.0 OHM,1%,0.125W,TC=T0	57668	CRB14FXE 20 OHM
A2R3712	315-0103-00			RES,FXD,FILM:10K OHM,5%,0.25W	19701	5043CX10K00J
A2R3714	315-0752-00			RES,FXD,FILM:7.5K OHM,5%,0.25W	57668	NTR25J-E07K5
A2R3716	315-0103-00			RES,FXD,FILM:10K OHM,5%,0.25W	19701	5043CX10K00J
A2R3724	321-0145-00			RES,FXD,FILM:316 OHM,1%,0.125W,TC=T0	07716	CEAD316R0F
A2R3725	321-0151-00			RES,FXD,FILM:365 OHM,1%,0.125W,TC=T0	07716	CEAD365R0F
A2R3735	311-1558-00			RES,VAR,NONWW:TRMR,20K OHM,0.5W	32997	3352T-1-203
A2R3742	315-0392-00			RES,FXD,FILM:3.9K OHM,5%,0.25W	57668	NTR25J-E03K9
A2R3744	315-0390-00			RES,FXD,FILM:39 OHM,5%,0.25W	57668	NTR25J-E39E0
A2R3752	321-0170-00			RES,FXD,FILM:576 OHM,1%,0.125W,TC=T0	07716	CEAD576R0F
A2R3753	321-0170-00			RES,FXD,FILM:576 OHM,1%,0.125W,TC=T0	07716	CEAD576R0F
A2R3754	321-0089-00			RES,FXD,FILM:82.5 OHM,1%,0.125W,TC=T0	91637	CMF55116G82R50F
A2R3756	315-0100-00			RES,FXD,FILM:10 OHM,5%,0.25W	19701	5043CX10RR00J
A2R3758	315-0100-00			RES,FXD,FILM:10 OHM,5%,0.25W	19701	5043CX10RR00J
A2R3774	315-0301-00			RES,FXD,FILM:300 OHM,5%,0.25W	57668	NTR25J-E300E
A2R3775	321-0181-00			RES,FXD,FILM:750 OHM,1%,0.125W,TC=T0	07716	CEAD750R0F
A2R3776	321-0181-00			RES,FXD,FILM:750 OHM,1%,0.125W,TC=T0	07716	CEAD750R0F
A2R3782	311-1403-00			RES,VAR,NONWW:PNL,5K OHM,1W,W/SW	01121	18M651
A2R3794	321-0030-00			RES,FXD,FILM:20.0 OHM,1%,0.125W,TC=T0	57668	CRB14FXE 20 OHM

http://manoman.sqhill.com

Component No.	Tektronix Part No.	Serial/Assembly No. Effective	Dscont	Name & Description	Mfr. Code	Mfr. Part No.
A2R3798	315-0511-00			RES,FXD,FILM:510 OHM,5%,0.25W	19701	5043CX510R0J
A2R3815	315-0102-00			RES,FXD,FILM:1K OHM,5%,0.25W	57668	NTR25JE01K0
A2R3816	315-0302-00			RES,FXD,FILM:3K OHM,5%,0.25W	57668	NTR25J-E03K0
A2R3817	315-0302-00			RES,FXD,FILM:3K OHM,5%,0.25W	57668	NTR25J-E03K0
A2R3825	315-0102-00			RES,FXD,FILM:1K OHM,5%,0.25W	57668	NTR25JE01K0
A2R3828	321-0064-00			RES,FXD,FILM:45.3 OHM,0.5%,0.125W,TC=T0	91637	CMF55116G45R30F
A2R3834	321-0201-00			RES,FXD,FILM:1.21K OHM,1%,0.125W,TC=T0	19701	5043ED1K210F
A2R3835	311-1564-00			RES,VAR,NONWW:TRMR,500 OHM,0.5W	32997	3352T-CK5501
A2R3838	315-0470-00			RES,FXD,FILM:47 OHM,5%,0.25W	57668	NTR25J-E47E0
A2R3839	315-0431-00			RES,FXD,FILM:430 OHM,5%,0.25W	19701	5043CX430R0J
A2R3842	321-0192-00			RES,FXD,FILM:976 OHM,1%,0.125W,TC=T0	19701	5033ED976R0F
A2R3843	321-0192-00			RES,FXD,FILM:976 OHM,1%,0.125W,TC=T0	19701	5033ED976R0F
A2R3849	315-0222-00			RES,FXD,FILM:2.2K OHM,5%,0.25W	57668	NTR25J-E02K2
A2R3854	315-0241-00			RES,FXD,FILM:240 OHM,5%,0.25W	19701	5043CX240R0J
A2R3858	321-0126-00			RES,FXD,FILM:200 OHM,1%,0.125W,TC=T0	19701	5033ED200R0F
A2R3868	315-0183-00			RES,FXD,FILM:18K OHM,5%,0.25W	19701	5043CX18K00J
A2R3876	315-0301-00			RES,FXD,FILM:300 OHM,5%,0.25W	57668	NTR25J-E300E
A2R3881	315-0470-00			RES,FXD,FILM:47 OHM,5%,0.25W	57668	NTR25J-E47E0
A2R3882	311-1561-00			RES,VAR,NONWW:TRMR,2.5K OHM,0.5W	32997	3352T-DY7-252
A2R3884	311-1559-00			RES,VAR,NONWW:TRMR,10K OHM,0.5W (FURN AS A SET W/S3782)	32997	3352T-1-103
A2R3885	315-0101-00			RES,FXD,FILM:100 OHM,5%,0.25W	57668	NTR25J-E 100E
A2R3886	315-0101-00			RES,FXD,FILM:100 OHM,5%,0.25W	57668	NTR25J-E 100E
A2R3889	315-0103-00			RES,FXD,FILM:10K OHM,5%,0.25W	19701	5043CX10K00J
A2R3891	315-0151-00			RES,FXD,FILM:150 OHM,5%,0.25W	57668	NTR25J-E150E
A2R3893	315-0103-00			RES,FXD,FILM:10K OHM,5%,0.25W	19701	5043CX10K00J
A2R3903	315-0112-00			RES,FXD,FILM:1.1K OHM,5%,0.25W	19701	5043CX1K100J
A2R3904	315-0221-00			RES,FXD,FILM:220 OHM,5%,0.25W	57668	NTR25J-E220E
A2R3906	315-0203-00			RES,FXD,FILM:20K OHM,5%,0.25W	57668	NTR25J-E 20K
A2R3914	315-0122-00			RES,FXD,FILM:1.2K OHM,5%,0.25W	57668	NTR25J-E01K2
A2R3915	315-0103-00			RES,FXD,FILM:10K OHM,5%,0.25W	19701	5043CX10K00J
A2R3916	315-0471-00			RES,FXD,FILM:470 OHM,5%,0.25W	57668	NTR25J-E470E
A2R3922	315-0102-00			RES,FXD,FILM:1K OHM,5%,0.25W	57668	NTR25JE01K0
A2R3924	315-0122-00			RES,FXD,FILM:1.2K OHM,5%,0.25W	57668	NTR25J-E01K2
A2R3932	315-0751-00			RES,FXD,FILM:750 OHM,5%,0.25W	57668	NTR25J-E750E
A2R3934	321-0196-00			RES,FXD,FILM:1.07K OHM,1%,0.125W,TC=T0	07716	CEAD10700F
A2R3944	315-0331-00			RES,FXD,FILM:330 OHM,5%,0.25W	57668	NTR25J-E330E
A2R3946	321-0126-00			RES,FXD,FILM:200 OHM,1%,0.125W,TC=T0	19701	5033ED200R0F
A2R3952	315-0101-00			RES,FXD,FILM:100 OHM,5%,0.25W	57668	NTR25J-E 100E
A2R3956	315-0390-00			RES,FXD,FILM:39 OHM,5%,0.25W	57668	NTR25J-E39E0
A2R3958	315-0222-00			RES,FXD,FILM:2.2K OHM,5%,0.25W	57668	NTR25J-E02K2
A2R3975	311-1559-00			RES,VAR,NONWW:TRMR,10K OHM,0.5W	32997	3352T-1-103
A2R3981	321-0307-00			RES,FXD,FILM:15.4K OHM,1%,0.125W,TC=T0	19701	5043ED15K40F
A2R3983	321-0307-00			RES,FXD,FILM:15.4K OHM,1%,0.125W,TC=T0	19701	5043ED15K40F
A2R3986	321-0277-00			RES,FXD,FILM:7.50K OHM,1%,0.125W,TC=T0	24546	NA55D7501F
A2R3987	321-0277-00			RES,FXD,FILM:7.50K OHM,1%,0.125W,TC=T0	24546	NA55D7501F
A2R3988	321-0253-00			RES,FXD,FILM:4.22K OHM,1%,0.125W,TC=T0	19701	5033ED 4K 220F
A2R3989	321-0253-00			RES,FXD,FILM:4.22K OHM,1%,0.125W,TC=T0	19701	5033ED 4K 220F
A2RT3267	307-0181-00			RES,THERMAL:100K OHM,10%,NTC	14193	K10-10002K
A2RT3767	307-0181-00			RES,THERMAL:100K OHM,10%,NTC (FURN AS A SET W/R3484)	14193	K10-10002K
A2S3285	----- -----					
A2S3414	260-1486-00			SWITCH,PUSH:1 BUTTON,4 POLE,MAGNIFIER (FURN AS AS SET W/R3884)	80009	260-1486-00
A2S3782	----- -----					
A2S3995	260-1208-00			SWITCH,PUSH:DPDT,28VDC,PUSH-PUSH	31918	ORDER BY DESCR
A2U3290	155-0078-10			MICROCKT,LINEAR:VERTICAL AMPLIFIER ML	80009	155-0078-10
A2U3605	160-0204-00			MICROCKT,DGTL:256 X 4 PROM,PRGM	80009	160-0204-00
A2U3705	156-0392-00			MICROCKT,DGTL:QUAD LATCH W/CLEAR	01295	SN74LS175N
A2U3790	155-0078-10			MICROCKT,LINEAR:VERTICAL AMPLIFIER ML	80009	155-0078-10

http://manoman.sqhill.com

Component No.	Tektronix Part No.	Serial/Assembly No. Effective	Dscont	Name & Description	Mfr. Code	Mfr. Part No.
A2U3805	156-0480-00			MICROCKT,DGTL:QUAD 2-INP AND GATE,TTL	01295	SN74LS08(N OR J)
A2U3905	156-0382-00			MICROCKT,DGTL:QUAD 2-INP NAND GATE	01295	SN74LS00(N OR J)
A2VR3096	152-0217-00			SEMICOND DVC,DI:ZEN,SI,8.2V,5%,0.4W,DO-7	04713	SZG20
A2VR3356	152-0166-00			SEMICOND DVC,DI:ZEN,SI,6.2V,5%,0.4W,DO-7	04713	SZ11738RL
A2VR3597	152-0217-00			SEMICOND DVC,DI:ZEN,SI,8.2V,5%,0.4W,DO-7	04713	SZG20
A2VR3662	152-0166-00			SEMICOND DVC,DI:ZEN,SI,6.2V,5%,0.4W,DO-7	04713	SZ11738RL
A2VR3824	152-0306-00			SEMICOND DVC,DI:ZEN,SI,9.1V,5%,0.4W,DO-7	12954	1N9608

http://manoman.sqhill.com

Component No.	Tektronix Part No.	Serial/Assembly No. Effective	Dscont	Name & Description	Mfr. Code	Mfr. Part No.
A3	670-5998-00			CIRCUIT BD ASSY:VERTICAL MODE SWITCH	80009	670-5998-00
A3C5018	281-0775-00			CAP,FXD,CER DI:0.1UF,20%,50V	04222	MA205E104MAA
A3C5135	290-0246-00			CAP,FXD,ELCTLT:3.3UF,10%,15V	12954	D3R3EA15K1
A3C5145	290-0246-00			CAP,FXD,ELCTLT:3.3UF,10%,15V	12954	D3R3EA15K1
A3C5214	290-0804-00			CAP,FXD,ELCTLT:10UF,+50-10%,25V	55680	ULB1E100TAAANA
A3C5235	290-0246-00			CAP,FXD,ELCTLT:3.3UF,10%,15V	12954	D3R3EA15K1
A3C5245	290-0246-00			CAP,FXD,ELCTLT:3.3UF,10%,15V	12954	D3R3EA15K1
A3CR5115	152-0141-02			SEMICOND DVC,DI:SW,SI,30V,150MA,30V,DO-35	03508	DA2527 (1N4152)
A3CR5116	152-0141-02			SEMICOND DVC,DI:SW,SI,30V,150MA,30V,DO-35	03508	DA2527 (1N4152)
A3CR5118	152-0141-02			SEMICOND DVC,DI:SW,SI,30V,150MA,30V,DO-35	03508	DA2527 (1N4152)
A3CR5211	152-0141-02			SEMICOND DVC,DI:SW,SI,30V,150MA,30V,DO-35	03508	DA2527 (1N4152)
A3CR5214	152-0141-02			SEMICOND DVC,DI:SW,SI,30V,150MA,30V,DO-35	03508	DA2527 (1N4152)
A3Q5017	151-0301-00			TRANSISTOR:PNP,SI,TO-18	04713	ST898
A3Q5056	151-0302-00			TRANSISTOR:NPN,SI,TO-18	04713	ST899
A3Q5057	151-0281-00			TRANSISTOR:NPN,SI,400 MILLIWATTS	80009	151-0281-00
A3Q5241	151-0301-00			TRANSISTOR:PNP,SI,TO-18	04713	ST898
A3Q5257	151-0281-00			TRANSISTOR:NPN,SI,400 MILLIWATTS	80009	151-0281-00
A3Q5258	151-0302-00			TRANSISTOR:NPN,SI,TO-18	04713	ST899
A3R5005	315-0102-00			RES,FXD,FILM:1K OHM,5%,0.25W	57668	NTR25JE01K0
A3R5006	315-0102-00			RES,FXD,FILM:1K OHM,5%,0.25W	57668	NTR25JE01K0
A3R5007	315-0102-00			RES,FXD,FILM:1K OHM,5%,0.25W	57668	NTR25JE01K0
A3R5015	315-0103-00			RES,FXD,FILM:10K OHM,5%,0.25W	19701	5043CX10K00J
A3R5018	315-0331-00			RES,FXD,FILM:330 OHM,5%,0.25W	57668	NTR25J-E330E
A3R5041	315-0161-00			RES,FXD,FILM:160 OHM,5%,0.25W	57668	NTR25J-E 160E
A3R5042	315-0332-00			RES,FXD,FILM:3.3K OHM,5%,0.25W	57668	NTR25J-E03K3
A3R5051	315-0241-00			RES,FXD,FILM:240 OHM,5%,0.25W	19701	5043CX240R0J
A3R5052	315-0162-00			RES,FXD,FILM:1.6K OHM,5%,0.25W	19701	5043CX1K600J
A3R5053	315-0821-00			RES,FXD,FILM:820 OHM,5%,0.25W	19701	5043CX820R0J
A3R5055	315-0473-00			RES,FXD,FILM:47K OHM,5%,0.25W	57668	NTR25J-E47K0
A3R5111	315-0102-00			RES,FXD,FILM:1K OHM,5%,0.25W	57668	NTR25JE01K0
A3R5114	315-0472-00			RES,FXD,FILM:4.7K OHM,5%,0.25W	57668	NTR25J-E04K7
A3R5117	315-0331-00			RES,FXD,FILM:330 OHM,5%,0.25W	57668	NTR25J-E330E
A3R5135	315-0621-00			RES,FXD,FILM:620 OHM,5%,0.25W	57668	NTR25J-E620E
A3R5145	315-0621-00			RES,FXD,FILM:620 OHM,5%,0.25W	57668	NTR25J-E620E
A3R5211	315-0302-00			RES,FXD,FILM:3K OHM,5%,0.25W	57668	NTR25J-E03K0
A3R5212	315-0472-00			RES,FXD,FILM:4.7K OHM,5%,0.25W	57668	NTR25J-E04K7
A3R5213	315-0362-00			RES,FXD,FILM:3.6K OHM,5%,0.25W	19701	5043CX3K600J
A3R5214	315-0751-00			RES,FXD,FILM:750 OHM,5%,0.25W	57668	NTR25J-E750E
A3R5235	315-0621-00			RES,FXD,FILM:620 OHM,5%,0.25W	57668	NTR25J-E620E
A3R5236	315-0103-00			RES,FXD,FILM:10K OHM,5%,0.25W	19701	5043CX10K00J
A3R5237	315-0472-00			RES,FXD,FILM:4.7K OHM,5%,0.25W	57668	NTR25J-E04K7
A3R5238	315-0821-00			RES,FXD,FILM:820 OHM,5%,0.25W	19701	5043CX820R0J
A3R5245	315-0621-00			RES,FXD,FILM:620 OHM,5%,0.25W	57668	NTR25J-E620E
A3R5251	315-0241-00			RES,FXD,FILM:240 OHM,5%,0.25W	19701	5043CX240R0J
A3R5252	315-0162-00			RES,FXD,FILM:1.6K OHM,5%,0.25W	19701	5043CX1K600J
A3R5253	315-0161-00			RES,FXD,FILM:160 OHM,5%,0.25W	57668	NTR25J-E 160E
A3R5254	315-0332-00			RES,FXD,FILM:3.3K OHM,5%,0.25W	57668	NTR25J-E03K3
A3R5255	315-0473-00			RES,FXD,FILM:47K OHM,5%,0.25W	57668	NTR25J-E47K0
A3S5210	260-1944-00			SWITCH,PUSH:5 BTN,2 POLE,VERTICAL MODE	80009	260-1944-00
A3U5235	156-0652-00			MICROCKT,DGTL:QUAD 2-INPUT EXCL-NOR GATES	01295	SN74LS266N

http://manoman.sqhill.com

Component No.	Tektronix Part No.	Serial/Assembly No. Effective	Dscont	Name & Description	Mfr. Code	Mfr. Part No.
A4	670-2811-05			CIRCUIT BD ASSY:VERTICAL OUTPUT	80009	670-2811-05
A4C402	283-0023-00			CAP,FXD,CER DI:0.1UF,+80-20%,12V	71590	2DDU66B104Z
A4C404	281-0546-00			CAP,FXD,CER DI:330PF,10%,500V	52763	2RDPLZ007 330PM0
A4C405	283-0618-00			CAP,FXD,MICA DI:130PF,2%,400V	00853	D155F131G0
A4C406	281-0602-00			CAP,FXD,CER DI:68PF,5%,500V	52763	2RDPLZ007 68P0JP
A4C409	281-0097-00			CAP,VAR,AIR DI:9-35PF,200V	33095	53-717-029-D9-35
A4C413	283-0067-00			CAP,FXD,CER DI:0.001UF,10%,200V	59660	835-515-YSE0102K
A4C416	281-0576-00			CAP,FXD,CER DI:11PF,5%,500V	52763	2RDPLZ007 MP0JC
A4C417	283-0081-00			CAP,FXD,CER DI:0.1UF,+80-20%,25V	59821	2DDU69E104Z
A4C423	283-0067-00			CAP,FXD,CER DI:0.001UF,10%,200V	59660	835-515-YSE0102K
A4C426	281-0576-00			CAP,FXD,CER DI:11PF,5%,500V	52763	2RDPLZ007 MP0JC
A4C428	281-0097-00			CAP,VAR,AIR DI:9-35PF,200V	33095	53-717-029-D9-35
A4C437	283-0067-00			CAP,FXD,CER DI:0.001UF,10%,200V	59660	835-515-YSE0102K
A4C438	283-0067-00			CAP,FXD,CER DI:0.001UF,10%,200V	59660	835-515-YSE0102K
A4C444	283-0268-00			CAP,FXD,CER DI:0.015UF,20%,50V	04222	3439-050C-153K
A4C445	283-0083-00			CAP,FXD,CER DI:0.0047UF,20%,500V	59660	811-565C471J
A4C446	283-0116-00			CAP,FXD,CER DI:820PF,5%,500V	59660	0801547Y5D0821J
A4C447	283-0054-00			CAP,FXD,CER DI:150PF,5%,200V	59660	855-535 U2J0151J
A4C453	283-0331-00			CAP,FXD,CER DI:43PF,2%,100V	59660	0805536C0G0430G
A4C455	281-0096-00			CAP,VAR,AIR DI:5.5-18PF,350V	52763	302324237
A4C462	281-0611-00			CAP,FXD,CER DI:2.7PF,+/-0.25PF,200V	52763	2RDPLZ007 2P70CC
A4C472	283-0023-00			CAP,FXD,CER DI:0.1UF,+80-20%,12V	71590	2DDU66B104Z
A4C475	283-0023-00			CAP,FXD,CER DI:0.1UF,+80-20%,12V	71590	2DDU66B104Z
A4C476	283-0000-00			CAP,FXD,CER DI:0.001UF,+100-0%,500V	59660	831-610-Y5U0102P
A4C491	283-0178-00			CAP,FXD,CER DI:0.1UF,20%,100V	05397	C330C104Z1U1CA
A4C492	283-0081-00			CAP,FXD,CER DI:0.1UF,+80-20%,25V	59821	2DDU69E104Z
A4C493	283-0081-00			CAP,FXD,CER DI:0.1UF,+80-20%,25V	59821	2DDU69E104Z
A4C494	283-0023-00			CAP,FXD,CER DI:0.1UF,+80-20%,12V	71590	2DDU66B104Z
A4E437	276-0543-00	B200000	B201426	SHLD BEAD,ELEK:FERRITE	80009	276-0543-00
A4E437	276-0507-00	B201427		SHLD BEAD,ELEK:FERRITE (466 ONLY)	02114	56-590-65B/3B
A4E437	276-0543-00	B200000	B201264	SHLD BEAD,ELEK:FERRITE	80009	276-0543-00
A4E437	276-0507-00	B201265		SHLD BEAD,ELEK:FERRITE (DM44 ONLY)	02114	56-590-65B/3B
A4E438	276-0543-00	B200000	B201426	SHLD BEAD,ELEK:FERRITE	80009	276-0543-00
A4E438	276-0507-00	B201427		SHLD BEAD,ELEK:FERRITE (466 ONLY)	02114	56-590-65B/3B
A4E438	276-0543-00	B200000	B201264	SHLD BEAD,ELEK:FERRITE	80009	276-0543-00
A4E438	276-0507-00	B201265		SHLD BEAD,ELEK:FERRITE (DM44 ONLY)	02114	56-590-65B/3B
A4L428	108-0370-00			COIL,RF:FIXED,140NH	80009	108-0370-00
A4L471	108-0538-00			COIL,RF:FIXED,2.7UH	76493	JWM#B7059
A4L491	108-0538-00			COIL,RF:FIXED,2.7UH	76493	JWM#B7059
A4L492	108-0538-00			COIL,RF:FIXED,2.7UH	76493	JWM#B7059
A4L494	108-0538-00			COIL,RF:FIXED,2.7UH	76493	JWM#B7059
A4LR482	108-0729-00			COIL,RF:FIXED,204NH,10%	80009	108-0729-00
A4LR484	108-0729-00			COIL,RF:FIXED,204NH,10%	80009	108-0729-00
A4Q412	151-0441-00			TRANSISTOR:NPN,SI,TO-72	04713	SRF501
A4Q416	151-0221-00			TRANSISTOR:PNP,SI,TO-92	80009	151-0221-00
A4Q422	151-0441-00			TRANSISTOR:NPN,SI,TO-72	04713	SRF501
A4Q426	151-0221-00			TRANSISTOR:PNP,SI,TO-92	80009	151-0221-00
A4R402	321-0176-00			RES,FXD,FILM:665 OHM,1%,0.125W,TC=T0	07716	CEAD665R0F
A4R403	321-0176-00			RES,FXD,FILM:665 OHM,1%,0.125W,TC=T0	07716	CEAD665R0F
A4R404	315-0512-00			RES,FXD,FILM:5.1K OHM,5%,0.25W (NOM VAL,SLCTD,2.4K OHM MIN,10K OHM MAX)	57668	NTR25J-E05K1
A4R405	321-0209-00			RES,FXD,FILM:1.47K OHM,1%,0.125W,TC=T0	19701	5033ED1K47F
A4R406	321-0134-00			RES,FXD,FILM:243 OHM,1%,0.125W,TC=T0	19701	5043ED243R0F
A4R407	321-0075-00			RES,FXD,FILM:59.0 OHM,1%,0.125W,TC=T0	91637	CMF55116G59R00F
A4R408	321-0075-00			RES,FXD,FILM:59.0 OHM,1%,0.125W,TC=T0	91637	CMF55116G59R00F

http://manoman.sqhill.com

Component No.	Tektronix Part No.	Serial/Assembly No. Effective	Dscont	Name & Description	Mfr. Code	Mfr. Part No.
A4R409	321-0113-00			RES,FXD,FILM:147 OHM,1%,0.125W,TC=T0	07716	CEAD147R0F
A4R411	321-0094-00			RES,FXD,FILM:93.1 OHM,1%,0.125W,TC=T0	91637	CMF55116G93R10F
A4R412	321-0068-00			RES,FXD,FILM:49.9 OHM,0.5%,0.125W,TC=T0	91637	CMF55116G49R90F
A4R413	315-0391-00			RES,FXD,FILM:390 OHM,5%,0.25W	57668	NTR25J-E390E
A4R414	321-0076-00			RES,FXD,FILM:60.4 OHM,1%,0.125W,TC=T0	91637	CMF55116G0R40F
A4R415	311-1248-00			RES,VAR,NONWW:TRMR,500 OHM,0.5W	32997	3386X-T07-501
A4R416	321-0058-00			RES,FXD,FILM:39.2 OHM,0.5%,0.125W,TC=T0	91637	CMF55116G39R20F
A4R417	321-0157-00			RES,FXD,FILM:422 OHM,1%,0.125W,TC=T0	07716	CEAD422R0F
A4R418	315-0270-00			RES,FXD,FILM:27 OHM,5%,0.25W	19701	5043CX27R00J
A4R420	321-0130-00			RES,FXD,FILM:221 OHM,1%,0.125W,TC=T0	19701	5043ED221R0F
A4R421	321-0157-00			RES,FXD,FILM:422 OHM,1%,0.125W,TC=T0	07716	CEAD422R0F
A4R422	321-0068-00			RES,FXD,FILM:49.9 OHM,0.5%,0.125W,TC=T0	91637	CMF55116G49R90F
A4R423	315-0391-00			RES,FXD,FILM:390 OHM,5%,0.25W	57668	NTR25J-E390E
A4R424	321-0076-00			RES,FXD,FILM:60.4 OHM,1%,0.125W,TC=T0	91637	CMF55116G0R40F
A4R425	315-0270-00			RES,FXD,FILM:27 OHM,5%,0.25W	19701	5043CX27R00J
A4R426	321-0058-00			RES,FXD,FILM:39.2 OHM,0.5%,0.125W,TC=T0	91637	CMF55116G39R20F
A4R427	321-0157-00			RES,FXD,FILM:422 OHM,1%,0.125W,TC=T0	07716	CEAD422R0F
A4R428	311-1248-00			RES,VAR,NONWW:TRMR,500 OHM,0.5W	32997	3386X-T07-501
A4R433	315-0201-00			RES,FXD,FILM:200 OHM,5%,0.25W	57668	NTR25J-E200E
A4R434	315-0392-00			RES,FXD,FILM:3.9K OHM,5%,0.25W	57668	NTR25J-E03K9
A4R435	321-0068-00			RES,FXD,FILM:49.9 OHM,0.5%,0.125W,TC=T0	91637	CMF55116G49R90F
A4R436	321-0068-00			RES,FXD,FILM:49.9 OHM,0.5%,0.125W,TC=T0	91637	CMF55116G49R90F
A4R437	315-0621-00			RES,FXD,FILM:620 OHM,5%,0.25W	57668	NTR25J-E620E
A4R438	315-0621-00			RES,FXD,FILM:620 OHM,5%,0.25W	57668	NTR25J-E620E
A4R442	321-0178-00			RES,FXD,FILM:698 OHM,1%,0.125W,TC=T0	07716	CEAD698R0F
A4R443	321-0178-00			RES,FXD,FILM:698 OHM,1%,0.125W,TC=T0	07716	CEAD698R0F
A4R444	311-1230-00			RES,VAR,NONWW:TRMR,20K OHM,0.5W	32997	3386F-T04-203
A4R445	311-1227-00			RES,VAR,NONWW:TRMR,5K OHM,0.5W	32997	3386F-T04-502
A4R446	311-1228-00			RES,VAR,NONWW:TRMR,10K OHM,0.5W	32997	3386F-T04-103
A4R447	315-0103-00			RES,FXD,FILM:10K OHM,5%,0.25W	19701	5043CX10K00J
A4R453	311-1227-00			RES,VAR,NONWW:TRMR,5K OHM,0.5W	32997	3386F-T04-502
A4R454	321-0073-00			RES,FXD,FILM:56.2 OHM,1%,0.125W,TC=T0	57668	RB14FXE 56E2
A4R455	311-1236-00			RES,VAR,NONWW:TRMR,250 OHM,0.5W	32997	3386X-T07-251
A4R456	321-0073-00			RES,FXD,FILM:56.2 OHM,1%,0.125W,TC=T0	57668	RB14FXE 56E2
A4R457	321-0113-00			RES,FXD,FILM:147 OHM,1%,0.125W,TC=T0	07716	CEAD147R0F
A4R462	315-0360-00			RES,FXD,FILM:36 OHM,5%,0.25W	19701	5043CX36R00J
A4R463	321-0052-00			RES,FXD,FILM:34.0 OHM,1%,0.125W,TC=T0	57668	CRB14 FXE 34 OHM
A4R464	321-0052-00			RES,FXD,FILM:34.0 OHM,1%,0.125W,TC=T0	57668	CRB14 FXE 34 OHM
A4R465	321-0080-00			RES,FXD,FILM:66.5 OHM,1%,0.125W,TC=T0	91637	CMF55116G66R50F
A4R466	321-0175-00			RES,FXD,FILM:649 OHM,1%,0.125W,TC=T0	19701	5043ED649R0F
A4R467	323-0127-00			RES,FXD,FILM:205 OHM,1%,0.5W,TC=T0	24546	NA65D2050F
A4R471	315-0301-00			RES,FXD,FILM:300 OHM,5%,0.25W	57668	NTR25J-E300E
A4R472	323-0144-00			RES,FXD,FILM:309 OHM,1%,0.5W,TC=T0	19701	5053RD309R0F
A4R473	323-0144-00			RES,FXD,FILM:309 OHM,1%,0.5W,TC=T0	19701	5053RD309R0F
A4R474	323-0144-00			RES,FXD,FILM:309 OHM,1%,0.5W,TC=T0	19701	5053RD309R0F
A4R475	323-0144-00			RES,FXD,FILM:309 OHM,1%,0.5W,TC=T0	19701	5053RD309R0F
A4R476	321-0121-00			RES,FXD,FILM:178 OHM,1%,0.125W,TC=T0	07716	CEAD178R0F
A4R477	321-0172-00			RES,FXD,FILM:604 OHM,1%,0.125W,TC=T0	19701	5033ED604R0F
A4R478	311-1138-00			RES,VAR,NONWW:TRMR,1K OHM,0.5W	32997	3386J-T07-102
A4R481	315-0180-00			RES,FXD,FILM:18 OHM,5%,0.25W	19701	5043CX18R00J
A4R483	308-0758-00			RES,FXD,WW:430 OHM,1%,7W	14193	SP1151S-430R0F
A4R484	315-0201-00			RES,FXD,FILM:200 OHM,5%,0.25W	57668	NTR25J-E200E
A4R486	308-0758-00			RES,FXD,WW:430 OHM,1%,7W	14193	SP1151S-430R0F
A4R487	315-0180-00			RES,FXD,FILM:18 OHM,5%,0.25W	19701	5043CX18R00J
A4R493	323-0049-00			RES,FXD,FILM:31.6 OHM,1%,0.5W,TC=T0	24546	NA65D31R6F
A4RT421	307-0125-00			RES,THERMAL:500 OHM,10%,NTC	15454	1DB501K-220-EC
A4U464	155-0115-00			MICROCKT,LINEAR:CRT VERT DEFL PL DRVR	80009	155-0115-00
A4U464	155-0077-01			MICROCKT,LINEAR:H-106,HYBRID	80009	155-0077-01

http://manoman.sqhill.com

Component No.	Tektronix Part No.	Serial/Assembly No. Effective	Dscont	Name & Description	Mfr. Code	Mfr. Part No.
				(ALTERNATE)		
A4VR434	152-0127-00			SEMICOND DVC,DI:ZEN,SI,7.5V,5%,0.4W,DO-7	14433	Z5347 (1N958B)

http://manoman.sghill.com

Component No.	Tektronix Part No.	Serial/Assembly No. Effective	Dscont	Name & Description	Mfr. Code	Mfr. Part No.
A5	670-6293-02	B020000	B200154	CIRCUIT BD ASSY:TRIGGER (STANDARD, OPTION 04 & 07)	80009	670-6293-02
A5	670-6293-07	B200155		CIRCUIT BD ASSY:TRIGGER (STANDARD, OPTION 04 & 07)	80009	670-6293-07
A5	670-6293-03	B200000	B200154	CIRCUIT BD ASSY:TRIGGER (OPTION 05 ONLY)	80009	670-6293-03
A5	670-6293-09	B200155		CIRCUIT BD ASSY:TRIGGER (OPTION 05 ONLY)	80009	670-6293-09
A5C502	281-0579-00			CAP,FXD,CER DI:21PF,5%,500V	52763	2RDPLZ007 21P0JC
A5C503	281-0603-00			CAP,FXD,CER DI:39PF,5%,500V	52763	2RDPLZ007 39P0JC
A5C511	281-0814-00			CAP,FXD,CER DI:100 PF,10%,100V	04222	MA101A101KAA
A5C512	281-0815-00			CAP,FXD,CER DI:0.027UF,20%,50V	04222	MA205C273MAA
A5C515	281-0759-00			CAP,FXD,CER DI:22PF,10%,100V	04222	MA101A220KAA
A5C522	281-0773-00			CAP,FXD,CER DI:0.01UF,10%,100V	04222	MA201C103KAA
A5C525	281-0773-00			CAP,FXD,CER DI:0.01UF,10%,100V	04222	MA201C103KAA
A5C531	281-0773-00			CAP,FXD,CER DI:0.01UF,10%,100V	04222	MA201C103KAA
A5C554	281-0775-00			CAP,FXD,CER DI:0.1UF,20%,50V	04222	MA205E104MAA
A5C582	290-0808-00			CAP,FXD,ELCTLT:2.7UF,10%,20V	05397	T322B275K020AS
A5C583	290-0808-00			CAP,FXD,ELCTLT:2.7UF,10%,20V	05397	T322B275K020AS
A5C584	290-0808-00			CAP,FXD,ELCTLT:2.7UF,10%,20V	05397	T322B275K020AS
A5C585	290-0808-00			CAP,FXD,ELCTLT:2.7UF,10%,20V	05397	T322B275K020AS
A5C600	290-0808-00			CAP,FXD,ELCTLT:2.7UF,10%,20V	05397	T322B275K020AS
A5C601	281-0775-00			CAP,FXD,CER DI:0.1UF,20%,50V	04222	MA205E104MAA
A5C603	281-0217-00			CAP,VAR,CER DI:0.5-3.5PF,400V	52763	311908141
A5C604	281-0814-00			CAP,FXD,CER DI:100 PF,10%,100V	04222	MA101A101KAA
A5C606	281-0207-00			CAP,VAR,PLASTIC:2-18PF,100V	52769	GXA 18000
A5C607	281-0579-00			CAP,FXD,CER DI:21PF,5%,500V	52763	2RDPLZ007 21P0JC
A5C608	281-0757-00			CAP,FXD,CER DI:10PF,20%,100V	04222	MA101A100MAA
A5C611	281-0814-00			CAP,FXD,CER DI:100 PF,10%,100V	04222	MA101A101KAA
A5C612	281-0815-00			CAP,FXD,CER DI:0.027UF,20%,50V	04222	MA205C273MAA
A5C612	281-0772-00			CAP,FXD,CER DI:4700PF,10%,100V (OPTION 05 ONLY)	04222	MA201C472KAA
A5C615	281-0759-00			CAP,FXD,CER DI:22PF,10%,100V	04222	MA101A220KAA
A5C622	281-0773-00			CAP,FXD,CER DI:0.01UF,10%,100V	04222	MA201C103KAA
A5C625	281-0773-00			CAP,FXD,CER DI:0.01UF,10%,100V	04222	MA201C103KAA
A5C631	281-0773-00			CAP,FXD,CER DI:0.01UF,10%,100V	04222	MA201C103KAA
A5C645	281-0775-00			CAP,FXD,CER DI:0.1UF,20%,50V (STANDARD, OPTION 04 & 07)	04222	MA205E104MAA
A5C650	281-0775-00			CAP,FXD,CER DI:0.1UF,20%,50V	04222	MA205E104MAA
A5C652	281-0775-00			CAP,FXD,CER DI:0.1UF,20%,50V	04222	MA205E104MAA
A5C654	281-0775-00			CAP,FXD,CER DI:0.1UF,20%,50V	04222	MA205E104MAA
A5C655	290-0808-00			CAP,FXD,ELCTLT:2.7UF,10%,20V	05397	T322B275K020AS
A5C673	281-0763-00			CAP,FXD,CER DI:47PF,10%,100V	04222	MA101A470KAA
A5C676	281-0161-00			CAP,VAR,CER DI:5-15PF,350V	59660	518-000A5-15
A5C684	281-0775-00			CAP,FXD,CER DI:0.1UF,20%,50V	04222	MA205E104MAA
A5C685	281-0812-00			CAP,FXD,CER DI:1000PF,10%,100V	04222	MA101C102KAA
A5C693	290-0808-00			CAP,FXD,ELCTLT:2.7UF,10%,20V	05397	T322B275K020AS
A5C702	281-0592-00			CAP,FXD,CER DI:4.7PF,+/-0.5PF,500V (OPTION 05 ONLY)	52763	2RDPLZ007 4P70DC
A5C704	281-0592-00			CAP,FXD,CER DI:4.7PF,+/-0.5PF,500V (OPTION 05 ONLY)	52763	2RDPLZ007 4P70DC
A5C711	281-0814-00			CAP,FXD,CER DI:100 PF,10%,100V (OPTION 05 ONLY)	04222	MA101A101KAA
A5C874	281-0759-00			CAP,FXD,CER DI:22PF,10%,100V	04222	MA101A220KAA
A5C882	281-0759-00			CAP,FXD,CER DI:22PF,10%,100V	04222	MA101A220KAA
A5C885	290-0943-00	B200000	B201426	CAP,FXD,ELCTLT:47UF,+50-20%,25V	55680	ULB1E470TAAANA
A5C885	290-0943-02	B201427		CAP,FXD,ELCTLT:47UF,20%,25V	55680	UVX1E470MAA1TD
A5C908	281-0814-00			CAP,FXD,CER DI:100 PF,10%,100V	04222	MA101A101KAA
A5C919	281-0786-00			CAP,FXD,CER DI:150PF,10%,100V	04222	MA101A151KAA

http://manoman.sqhill.com

Component No.	Tektronix Part No.	Serial/Assembly No. Effective	Dscont	Name & Description	Mfr. Code	Mfr. Part No.
				(OPTION 05 ONLY)		
A5C922	281-0756-00			CAP,FXD,CER DI:2.2PF,+/-0.5PF,200V	04222	MA106A2R2DAA
A5C925	281-0759-00			CAP,FXD,CER DI:22PF,10%,100V	04222	MA101A220KAA
A5C942	290-0808-00			CAP,FXD,ELCTLT:2.7UF,10%,20V	05397	T322B275K020AS
A5C943	281-0797-00			CAP,FXD,CER DI:15PF,10%,100V	04222	MA106A150KAA
A5C944	290-0183-00			CAP,FXD,ELCTLT:1UF,10%,35V	05397	T3228105K035AS
A5C945	281-0786-00			CAP,FXD,CER DI:150PF,10%,100V	04222	MA101A151KAA
A5C947	281-0791-00			CAP,FXD,CER DI:270PF,10%,100V	04222	MA101C271KAA
A5C965	290-0808-00			CAP,FXD,ELCTLT:2.7UF,10%,20V	05397	T322B275K020AS
A5C967	290-0808-00			CAP,FXD,ELCTLT:2.7UF,10%,20V	05397	T322B275K020AS
A5C968	290-0808-00			CAP,FXD,ELCTLT:2.7UF,10%,20V	05397	T322B275K020AS
A5C986	290-0536-00			CAP,FXD,ELCTLT:10UF,20%,25V TANTALUM	05397	T368B106M025AS
A5C987	290-0536-00			CAP,FXD,ELCTLT:10UF,20%,25V TANTALUM (STANDARD, OPTION 04 & 07)	05397	T368B106M025AS
A5C992	281-0775-00			CAP,FXD,CER DI:0.1UF,20%,50V	04222	MA205E104MAA
A5C993	281-0775-00			CAP,FXD,CER DI:0.1UF,20%,50V	04222	MA205E104MAA
A5C994	281-0775-00			CAP,FXD,CER DI:0.1UF,20%,50V	04222	MA205E104MAA
A5CR517	152-0246-00			SEMICOND DVC,DI:SW,SI,40V,200MA,DO-7	14433	WG1537TK
A5CR617	152-0246-00			SEMICOND DVC,DI:SW,SI,40V,200MA,DO-7	14433	WG1537TK
A5CR674	152-0141-02			SEMICOND DVC,DI:SW,SI,30V,150MA,30V,DO-35	03508	DA2527 (1N4152)
A5CR684	152-0141-02			SEMICOND DVC,DI:SW,SI,30V,150MA,30V,DO-35	03508	DA2527 (1N4152)
A5CR710	152-0246-00			SEMICOND DVC,DI:SW,SI,40V,200MA,DO-7 (OPTION 05 ONLY)	14433	WG1537TK
A5CR821	152-0141-02			SEMICOND DVC,DI:SW,SI,30V,150MA,30V,DO-35	03508	DA2527 (1N4152)
A5CR822	152-0141-02			SEMICOND DVC,DI:SW,SI,30V,150MA,30V,DO-35	03508	DA2527 (1N4152)
A5CR823	152-0141-02			SEMICOND DVC,DI:SW,SI,30V,150MA,30V,DO-35	03508	DA2527 (1N4152)
A5CR824	152-0141-02			SEMICOND DVC,DI:SW,SI,30V,150MA,30V,DO-35	03508	DA2527 (1N4152)
A5CR834	152-0141-02			SEMICOND DVC,DI:SW,SI,30V,150MA,30V,DO-35	03508	DA2527 (1N4152)
A5CR851	152-0141-02			SEMICOND DVC,DI:SW,SI,30V,150MA,30V,DO-35	03508	DA2527 (1N4152)
A5CR852	152-0141-02			SEMICOND DVC,DI:SW,SI,30V,150MA,30V,DO-35	03508	DA2527 (1N4152)
A5CR853	152-0141-02			SEMICOND DVC,DI:SW,SI,30V,150MA,30V,DO-35	03508	DA2527 (1N4152)
A5CR857	152-0141-02			SEMICOND DVC,DI:SW,SI,30V,150MA,30V,DO-35	03508	DA2527 (1N4152)
A5CR858	152-0141-02			SEMICOND DVC,DI:SW,SI,30V,150MA,30V,DO-35	03508	DA2527 (1N4152)
A5CR865	152-0141-02			SEMICOND DVC,DI:SW,SI,30V,150MA,30V,DO-35	03508	DA2527 (1N4152)
A5CR874	152-0141-02			SEMICOND DVC,DI:SW,SI,30V,150MA,30V,DO-35	03508	DA2527 (1N4152)
A5CR882	152-0141-02			SEMICOND DVC,DI:SW,SI,30V,150MA,30V,DO-35	03508	DA2527 (1N4152)
A5CR884	152-0141-02			SEMICOND DVC,DI:SW,SI,30V,150MA,30V,DO-35	03508	DA2527 (1N4152)
A5CR885	152-0141-02			SEMICOND DVC,DI:SW,SI,30V,150MA,30V,DO-35	03508	DA2527 (1N4152)
A5CR887	152-0141-02			SEMICOND DVC,DI:SW,SI,30V,150MA,30V,DO-35	03508	DA2527 (1N4152)
A5CR888	152-0141-02			SEMICOND DVC,DI:SW,SI,30V,150MA,30V,DO-35	03508	DA2527 (1N4152)
A5CR892	152-0141-02			SEMICOND DVC,DI:SW,SI,30V,150MA,30V,DO-35	03508	DA2527 (1N4152)
A5CR893	152-0141-02			SEMICOND DVC,DI:SW,SI,30V,150MA,30V,DO-35	03508	DA2527 (1N4152)
A5CR894	152-0141-02			SEMICOND DVC,DI:SW,SI,30V,150MA,30V,DO-35	03508	DA2527 (1N4152)
A5CR908	152-0141-02			SEMICOND DVC,DI:SW,SI,30V,150MA,30V,DO-35	03508	DA2527 (1N4152)
A5CR914	152-0141-02			SEMICOND DVC,DI:SW,SI,30V,150MA,30V,DO-35	03508	DA2527 (1N4152)
A5CR916	152-0141-02			SEMICOND DVC,DI:SW,SI,30V,150MA,30V,DO-35	03508	DA2527 (1N4152)
A5CR917	152-0141-02			SEMICOND DVC,DI:SW,SI,30V,150MA,30V,DO-35	03508	DA2527 (1N4152)
A5CR943	152-0141-02			SEMICOND DVC,DI:SW,SI,30V,150MA,30V,DO-35	03508	DA2527 (1N4152)
A5CR945	152-0141-02			SEMICOND DVC,DI:SW,SI,30V,150MA,30V,DO-35	03508	DA2527 (1N4152)
A5CR946	152-0141-02			SEMICOND DVC,DI:SW,SI,30V,150MA,30V,DO-35	03508	DA2527 (1N4152)
A5CR948	152-0333-00			SEMICOND DVC,DI:SW,SI,55V,200MA,DO-35	07263	FDH-6012
A5CR949	152-0141-02			SEMICOND DVC,DI:SW,SI,30V,150MA,30V,DO-35	03508	DA2527 (1N4152)
A5CR961	152-0141-02			SEMICOND DVC,DI:SW,SI,30V,150MA,30V,DO-35	03508	DA2527 (1N4152)
A5CR962	152-0141-02			SEMICOND DVC,DI:SW,SI,30V,150MA,30V,DO-35	03508	DA2527 (1N4152)
A5J571	131-1003-00			CONN,RCPT,ELEC:CKT BD MT,3 PRONG	80009	131-1003-00
A5J573	131-1003-00			CONN,RCPT,ELEC:CKT BD MT,3 PRONG	80009	131-1003-00
A5J575	131-1003-00			CONN,RCPT,ELEC:CKT BD MT,3 PRONG	80009	131-1003-00
A5J678	131-1003-00			CONN,RCPT,ELEC:CKT BD MT,3 PRONG	80009	131-1003-00

http://manoman.sqhill.com

Component No.	Tektronix Part No.	Serial/Assembly No. Effective	Dscont	Name & Description	Mfr. Code	Mfr. Part No.
A5J688	131-1003-00			CONN,RCPT,ELEC:CKT BD MT,3 PRONG	80009	131-1003-00
A5J858	131-1003-00			CONN,RCPT,ELEC:CKT BD MT,3 PRONG	80009	131-1003-00
A5J917	131-1003-00			CONN,RCPT,ELEC:CKT BD MT,3 PRONG	80009	131-1003-00
A5J919	131-1003-00			CONN,RCPT,ELEC:CKT BD MT,3 PRONG	80009	131-1003-00
A5L582	108-0538-00			COIL,RF:FIXED,2.7UH	76493	JWM#B7059
A5L584	108-0538-00			COIL,RF:FIXED,2.7UH	76493	JWM#B7059
A5L585	108-0538-00			COIL,RF:FIXED,2.7UH	76493	JWM#B7059
A5L676	108-0260-00			COIL,RF:FIXED,98NH	TK2042	ORDER BY DESCR
A5L942	108-0538-00			COIL,RF:FIXED,2.7UH (STANDARD, OPTION 04 & 07)	76493	JWM#B7059
A5P44	131-0608-00			TERMINAL,PIN:0.365 L X 0.025 BRZ GLD PL (STANDARD, OPTION 04 & 07)	22526	48283-036
A5P500	131-0608-00			TERMINAL,PIN:0.365 L X 0.025 BRZ GLD PL (STANDARD, OPTION 04 & 07)	22526	48283-036
A5P530	131-0608-00			TERMINAL,PIN:0.365 L X 0.025 BRZ GLD PL (STANDARD, OPTION 04 & 07)	22526	48283-036
A5P630	131-0608-00			TERMINAL,PIN:0.365 L X 0.025 BRZ GLD PL (STANDARD, OPTION 04 & 07)	22526	48283-036
A5P700	131-0608-00			TERMINAL,PIN:0.365 L X 0.025 BRZ GLD PL (OPTION 05 ONLY)	22526	48283-036
A5P701	131-0608-00			TERMINAL,PIN:0.365 L X 0.025 BRZ GLD PL (OPTION 05 ONLY)	22526	48283-036
A5P702	131-0608-00			TERMINAL,PIN:0.365 L X 0.025 BRZ GLD PL (OPTION 05 ONLY)	22526	48283-036
A5P712	131-0608-00			TERMINAL,PIN:0.365 L X 0.025 BRZ GLD PL (OPTION 05 ONLY)	22526	48283-036
A5P715	131-0608-00			TERMINAL,PIN:0.365 L X 0.025 BRZ GLD PL (OPTION 05 ONLY)	22526	48283-036
A5P800	131-0608-00			TERMINAL,PIN:0.365 L X 0.025 BRZ GLD PL (STANDARD, OPTION 04 & 07)	22526	48283-036
A5P948	131-0608-00			TERMINAL,PIN:0.365 L X 0.025 BRZ GLD PL (STANDARD, OPTION 04 & 07)	22526	48283-036
A5P1020	131-0608-00			TERMINAL,PIN:0.365 L X 0.025 BRZ GLD PL (STANDARD, OPTION 04 & 07)	22526	48283-036
A5Q522	151-1042-00			SEMICOND DVC SE:FET,SI,TO-92 (FURN AS A SET W/Q524)	04713	SPF627M2
A5Q524	----- -----			(FURN AS A SET W/Q522)		
A5Q622	151-1042-00			SEMICOND DVC SE:FET,SI,TO-92 (FURN AS A SET W/Q624)	04713	SPF627M2
A5Q624	----- -----			(FURN AS A SET W/Q622)		
A5Q672	151-0367-00			TRANSISTOR:NPN,SI,X-55	04713	SPS 8811
A5Q678	151-0190-00			TRANSISTOR:NPN,SI,TO-92 (STANDARD, OPTION 04 & 07)	80009	151-0190-00
A5Q682	151-0367-00			TRANSISTOR:NPN,SI,X-55	04713	SPS 8811
A5Q710	151-1005-00			TRANSISTOR:FET,N-CHAN,SI,TO-106 (OPTION 05 ONLY)	04713	SPF685
A5Q712	151-0220-03			TRANSISTOR:PNP,SI,TO-92 (OPTION 05 ONLY)	04713	SPS6915
A5Q820	151-0232-00			TRANSISTOR:NPN,SI,TO-78	07263	SP12141
A5Q822	151-0190-00			TRANSISTOR:NPN,SI,TO-92	80009	151-0190-00
A5Q824	151-0220-00			TRANSISTOR:PNP,SI,TO-92	80009	151-0220-00
A5Q834	151-0220-00			TRANSISTOR:PNP,SI,TO-92	80009	151-0220-00
A5Q844	151-0190-00			TRANSISTOR:NPN,SI,TO-92	80009	151-0190-00
A5Q852	151-0190-00			TRANSISTOR:NPN,SI,TO-92	80009	151-0190-00
A5Q854	151-0190-00			TRANSISTOR:NPN,SI,TO-92	80009	151-0190-00
A5Q856	151-0220-00			TRANSISTOR:PNP,SI,TO-92	80009	151-0220-00
A5Q864	151-0220-03			TRANSISTOR:PNP,SI,TO-92	04713	SPS6915
A5Q866	151-0220-03			TRANSISTOR:PNP,SI,TO-92	04713	SPS6915
A5Q872	151-0220-00			TRANSISTOR:PNP,SI,TO-92	80009	151-0220-00
A5Q874	151-0220-00			TRANSISTOR:PNP,SI,TO-92	80009	151-0220-00

http://manoman.sqhill.com

Component No.	Tektronix Part No.	Serial/Assembly No. Effective	Dscont	Name & Description	Mfr. Code	Mfr. Part No.
A5Q882	151-0190-00			TRANSISTOR:NPN,SI,TO-92	80009	151-0190-00
A5Q884	151-0220-03			TRANSISTOR:PNP,SI,TO-92	04713	SPS6915
A5Q904	151-0220-03			TRANSISTOR:PNP,SI,TO-92	04713	SPS6915
A5Q906	151-0220-03			TRANSISTOR:PNP,SI,TO-92	04713	SPS6915
A5Q912	151-0190-00			TRANSISTOR:NPN,SI,TO-92	80009	151-0190-00
A5Q914	151-0190-00			TRANSISTOR:NPN,SI,TO-92	80009	151-0190-00
A5Q916	151-0220-00			TRANSISTOR:PNP,SI,TO-92	80009	151-0220-00
A5Q919	151-0190-00			TRANSISTOR:NPN,SI,TO-92	80009	151-0190-00
A5Q924	151-0220-03			TRANSISTOR:PNP,SI,TO-92	04713	SPS6915
A5Q926	151-0220-03			TRANSISTOR:PNP,SI,TO-92	04713	SPS6915
A5Q954	151-0190-00			TRANSISTOR:NPN,SI,TO-92	80009	151-0190-00
A5Q962	151-0190-00			TRANSISTOR:NPN,SI,TO-92	80009	151-0190-00
A5Q964	151-0190-00			TRANSISTOR:NPN,SI,TO-92	80009	151-0190-00
A5Q982	151-0190-00			TRANSISTOR:NPN,SI,TO-92	80009	151-0190-00
A5Q986	151-0188-00			TRANSISTOR:PNP,SI,TO-92	80009	151-0188-00
A5R502	315-0754-00			RES,FXD,FILM:750K OHM,5%,0.25W,MI	19701	5043CX750K0J
A5R503	315-0334-00			RES,FXD,FILM:330K OHM,5%,0.25W	57668	NTR25J-E 330K
A5R507	321-0068-00	B200000	B200154	RES,FXD,FILM:49.9 OHM,0.5%,0.125W,TC=T0	91637	CMF55116G49R90F
A5R508	321-0068-00			RES,FXD,FILM:49.9 OHM,0.5%,0.125W,TC=T0	91637	CMF55116G49R90F
A5R509	321-0068-00	B200000	B200154	RES,FXD,FILM:49.9 OHM,0.5%,0.125W,TC=T0	91637	CMF55116G49R90F
A5R511	315-0104-00			RES,FXD,FILM:100K OHM,5%,0.25W	57668	NTR25J-E100K
A5R512	315-0563-00			RES,FXD,FILM:56K OHM,5%,0.25W	19701	5043CX56K00J
A5R516	321-0481-00			RES,FXD,FILM:1M OHM,1%,0.125W,TC=T0	19701	5043ED1M000F
A5R517	315-0101-00			RES,FXD,FILM:100 OHM,5%,0.25W	57668	NTR25J-E 100E
A5R518	315-0101-00			RES,FXD,FILM:100 OHM,5%,0.25W	57668	NTR25J-E 100E
A5R522	315-0101-00			RES,FXD,FILM:100 OHM,5%,0.25W	57668	NTR25J-E 100E
A5R523	315-0150-00			RES,FXD,FILM:15 OHM,5%,0.25W	19701	5043CX15R00J
A5R524	315-0150-00			RES,FXD,FILM:15 OHM,5%,0.25W	19701	5043CX15R00J
A5R525	315-0101-00			RES,FXD,FILM:100 OHM,5%,0.25W	57668	NTR25J-E 100E
A5R526	315-0103-00			RES,FXD,FILM:10K OHM,5%,0.25W	19701	5043CX10K00J
A5R527	315-0203-00			RES,FXD,FILM:20K OHM,5%,0.25W	57668	NTR25J-E 20K
A5R528	315-0104-00			RES,FXD,FILM:100K OHM,5%,0.25W	57668	NTR25J-E100K
A5R530	311-1647-00			RES,VAR,NONWW:PNL,10K OHM,1W,W/SW (FURN AS A SET W/S530)	12697	381-CM40354
A5R531	315-0681-00			RES,FXD,FILM:680 OHM,5%,0.25W	57668	NTR25J-E680E
A5R535	311-1558-00			RES,VAR,NONWW:TRMR,20K OHM,0.5W	32997	3352T-1-203
A5R536	315-0202-00			RES,FXD,FILM:2K OHM,5%,0.25W	57668	NTR25J-E 2K
A5R537	315-0560-00			RES,FXD,FILM:56 OHM,5%,0.25W	57668	NTR25J-E56E0
A5R540	315-0182-00			RES,FXD,FILM:1.8K OHM,5%,0.25W	57668	NTR25J-E1K8
A5R541	315-0103-00			RES,FXD,FILM:10K OHM,5%,0.25W	19701	5043CX10K00J
A5R543	315-0102-00			RES,FXD,FILM:1K OHM,5%,0.25W	57668	NTR25JE01K0
A5R545	307-0113-00			RES,FXD,CMPSN:5.1 OHM,5%,0.25W	01121	CB51G5
A5R547	315-0302-00			RES,FXD,FILM:3K OHM,5%,0.25W	57668	NTR25J-E03K0
A5R548	315-0202-00			RES,FXD,FILM:2K OHM,5%,0.25W	57668	NTR25J-E 2K
A5R550	315-0100-00			RES,FXD,FILM:10 OHM,5%,0.25W	19701	5043CX10RR00J
A5R551	315-0152-00			RES,FXD,FILM:1.5K OHM,5%,0.25W	57668	NTR25J-E01K5
A5R553	315-0472-00			RES,FXD,FILM:4.7K OHM,5%,0.25W	57668	NTR25J-E04K7
A5R554	311-1560-00			RES,VAR,NONWW:TRMR,5K OHM,0.5W	32997	3352T-1-502
A5R555	311-1558-00			RES,VAR,NONWW:TRMR,20K OHM,0.5W	32997	3352T-1-203
A5R592	315-0220-00			RES,FXD,FILM:22 OHM,5%,0.25W	19701	5043CX22R00J
A5R600	315-0470-00			RES,FXD,FILM:47 OHM,5%,0.25W	57668	NTR25J-E47E0
A5R601	315-0220-00			RES,FXD,FILM:22 OHM,5%,0.25W	19701	5043CX22R00J
A5R603	325-0245-00			RES,FXD,FILM:3.32M OHM 1%,0.125W	19701	5053YL3M320F
A5R604	321-0381-00			RES,FXD,FILM:90.9K OHM,1%,0.125W,TC=T0	07716	CEAD90901F
A5R605	315-0510-00			RES,FXD,FILM:51 OHM,5%,0.25W	19701	5043CX51R00J
A5R606	321-0790-00			RES,FXD,FILM:990K OHM,1%,0.125W,TC=T0	07716	CEAD99002F
A5R607	321-0450-00			RES,FXD,FILM:475K OHM,1%,0.125W,TC=T0	19701	5043ED475K0F
A5R608	315-0392-00			RES,FXD,FILM:3.9K OHM,5%,0.25W	57668	NTR25J-E03K9

http://manoman.sqhill.com

Component No.	Tektronix Part No.	Serial/Assembly No. Effective	Dscont	Name & Description	Mfr. Code	Mfr. Part No.
A5R609	315-0274-00			RES,FXD,FILM:270K OHM,5%,0.25W	57668	NTR25J-E270K
A5R611	315-0104-00			RES,FXD,FILM:100K OHM,5%,0.25W	57668	NTR25J-E100K
A5R612	315-0563-00			RES,FXD,FILM:56K OHM,5%,0.25W	19701	5043CX56K00J
A5R616	321-0481-00			RES,FXD,FILM:1M OHM,1%,0.125W,TC=T0	19701	5043ED1M000F
A5R616	315-0475-00			RES,FXD,FILM:4.7M OHM,5%,0.25W (OPTION 05 ONLY)	01121	CB4755
A5R617	315-0101-00			RES,FXD,FILM:100 OHM,5%,0.25W	57668	NTR25J-E 100E
A5R618	315-0101-00			RES,FXD,FILM:100 OHM,5%,0.25W	57668	NTR25J-E 100E
A5R621	315-0680-00			RES,FXD,FILM:68 OHM,5%,0.25W	57668	NTR25J-E68E0
A5R622	315-0101-00			RES,FXD,FILM:100 OHM,5%,0.25W	57668	NTR25J-E 100E
A5R623	315-0150-00			RES,FXD,FILM:15 OHM,5%,0.25W	19701	5043CX15R00J
A5R624	315-0150-00			RES,FXD,FILM:15 OHM,5%,0.25W	19701	5043CX15R00J
A5R625	315-0101-00			RES,FXD,FILM:100 OHM,5%,0.25W	57668	NTR25J-E 100E
A5R627	315-0203-00			RES,FXD,FILM:20K OHM,5%,0.25W	57668	NTR25J-E 20K
A5R628	315-0104-00			RES,FXD,FILM:100K OHM,5%,0.25W	57668	NTR25J-E100K
A5R630	311-1647-00			RES,VAR,NONWW:PNL,10K OHM,1W,W/SW (FURN AS A SET W/S630)	12697	381-CM40354
A5R631	315-0681-00			RES,FXD,FILM:680 OHM,5%,0.25W	57668	NTR25J-E680E
A5R635	311-1558-00			RES,VAR,NONWW:TRMR,20K OHM,0.5W	32997	3352T-1-203
A5R636	315-0202-00			RES,FXD,FILM:2K OHM,5%,0.25W	57668	NTR25J-E 2K
A5R637	315-0560-00			RES,FXD,FILM:56 OHM,5%,0.25W	57668	NTR25J-E56E0
A5R640	315-0182-00			RES,FXD,FILM:1.8K OHM,5%,0.25W	57668	NTR25J-E1K8
A5R641	315-0103-00			RES,FXD,FILM:10K OHM,5%,0.25W	19701	5043CX10K00J
A5R643	315-0102-00			RES,FXD,FILM:1K OHM,5%,0.25W	57668	NTR25JE01K0
A5R645	307-0113-00			RES,FXD,CMPSN:5.1 OHM,5%,0.25W	01121	CB51G5
A5R647	315-0302-00			RES,FXD,FILM:3K OHM,5%,0.25W	57668	NTR25J-E03K0
A5R648	315-0202-00			RES,FXD,FILM:2K OHM,5%,0.25W	57668	NTR25J-E 2K
A5R650	315-0100-00			RES,FXD,FILM:10 OHM,5%,0.25W	19701	5043CX10RR00J
A5R651	315-0152-00			RES,FXD,FILM:1.5K OHM,5%,0.25W	57668	NTR25J-E01K5
A5R653	315-0472-00			RES,FXD,FILM:4.7K OHM,5%,0.25W	57668	NTR25J-E04K7
A5R654	311-1560-00			RES,VAR,NONWW:TRMR,5K OHM,0.5W	32997	3352T-1-502
A5R655	311-1558-00			RES,VAR,NONWW:TRMR,20K OHM,0.5W	32997	3352T-1-203
A5R672	315-0270-00			RES,FXD,FILM:27 OHM,5%,0.25W	19701	5043CX27R00J
A5R673	311-1260-00			RES,VAR,NONWW:TRMR,250 OHM,0.5W	32997	3329P-L58-251
A5R674	321-0198-00			RES,FXD,FILM:1.13K OHM,1%,0.125W,TC=T0	07716	CEAD11300F
A5R675	311-1566-00			RES,VAR,NONWW:TRMR,200 OHM,0.5W	32997	3352T-1-201
A5R676	311-1260-00			RES,VAR,NONWW:TRMR,250 OHM,0.5W	32997	3329P-L58-251
A5R678	315-0430-00			RES,FXD,FILM:43 OHM,5%,0.25W	19701	5043CX43R00J
A5R679	311-1567-00			RES,VAR,NONWW:TRMR,100 OHM,0.5W	32997	3352T-1-101
A5R682	315-0270-00			RES,FXD,FILM:27 OHM,5%,0.25W	19701	5043CX27R00J
A5R684	321-0198-00			RES,FXD,FILM:1.13K OHM,1%,0.125W,TC=T0	07716	CEAD11300F
A5R685	315-0124-00			RES,FXD,FILM:120K OHM,5%,0.25W	19701	5043CX120K0J
A5R688	315-0430-00			RES,FXD,FILM:43 OHM,5%,0.25W	19701	5043CX43R00J
A5R689	315-0220-00			RES,FXD,FILM:22 OHM,5%,0.25W	19701	5043CX22R00J
A5R693	315-0100-00			RES,FXD,FILM:10 OHM,5%,0.25W	19701	5043CX10RR00J
A5R694	321-0175-00			RES,FXD,FILM:649 OHM,1%,0.125W,TC=T0	19701	5043ED649R0F
A5R710	315-0153-00			RES,FXD,FILM:15K OHM,5%,0.25W (OPTION 05 ONLY)	19701	5043CX15K00J
A5R711	315-0470-00			RES,FXD,FILM:47 OHM,5%,0.25W (OPTION 05 ONLY)	57668	NTR25J-E47E0
A5R713	315-0472-00			RES,FXD,FILM:4.7K OHM,5%,0.25W (OPTION 05 ONLY)	57668	NTR25J-E04K7
A5R714	315-0472-00			RES,FXD,FILM:4.7K OHM,5%,0.25W (OPTION 05 ONLY)	57668	NTR25J-E04K7
A5R715	321-0496-00			RES,FXD,FILM:1.43 MEG OHM,1%,0.125W,TC=T0 (OPTION 05 ONLY)	01121	ORDER BY DESCR
A5R719	315-0106-00			RES,FXD,FILM:10M OHM,5%,0.25W (OPTION 05 ONLY)	01121	CB1065
A5R822	315-0101-00			RES,FXD,FILM:100 OHM,5%,0.25W	57668	NTR25J-E 100E

http://manoman.sqhill.com

Component No.	Tektronix Part No.	Serial/Assembly No. Effective	Dscont	Name & Description	Mfr. Code	Mfr. Part No.
A5R823	321-0227-00			RES,FXD,FILM:2.26K OHM,1%,0.125W,TC=T0	01121	RNK2261F
A5R824	315-0431-00			RES,FXD,FILM:430 OHM,5%,0.25W	19701	5043CX430R0J
A5R825	315-0104-00			RES,FXD,FILM:100K OHM,5%,0.25W	57668	NTR25J-E100K
A5R826	315-0202-00			RES,FXD,FILM:2K OHM,5%,0.25W	57668	NTR25J-E 2K
A5R827	315-0101-00			RES,FXD,FILM:100 OHM,5%,0.25W	57668	NTR25J-E 100E
A5R832	301-0822-00			RES,FXD,FILM:8.2K OHM,5%,0.5W	19701	5053CX8K200J
A5R833	315-0104-00			RES,FXD,FILM:100K OHM,5%,0.25W	57668	NTR25J-E100K
A5R834	315-0241-00			RES,FXD,FILM:240 OHM,5%,0.25W	19701	5043CX240R0J
A5R836	315-0112-00			RES,FXD,FILM:1.1K OHM,5%,0.25W	19701	5043CX1K100J
A5R837	315-0123-00			RES,FXD,FILM:12K OHM,5%,0.25W	57668	NTR25J-E12K0
A5R842	315-0182-00			RES,FXD,FILM:1.8K OHM,5%,0.25W	57668	NTR25J-E1K8
A5R843	315-0270-00			RES,FXD,FILM:27 OHM,5%,0.25W	19701	5043CX27R00J
A5R844	315-0102-00			RES,FXD,FILM:1K OHM,5%,0.25W	57668	NTR25JE01K0
A5R851	315-0112-00			RES,FXD,FILM:1.1K OHM,5%,0.25W	19701	5043CX1K100J
A5R852	321-0209-00			RES,FXD,FILM:1.47K OHM,1%,0.125W,TC=T0	19701	5033ED1K47F
A5R853	315-0472-00			RES,FXD,FILM:4.7K OHM,5%,0.25W	57668	NTR25J-E04K7
A5R854	321-0160-00			RES,FXD,FILM:453 OHM,1%,0.125W,TC=T0	19701	5033ED453R0F
A5R855	315-0221-00			RES,FXD,FILM:220 OHM,5%,0.25W	57668	NTR25J-E220E
A5R856	321-0160-00			RES,FXD,FILM:453 OHM,1%,0.125W,TC=T0	19701	5033ED453R0F
A5R857	315-0911-00			RES,FXD,FILM:910 OHM,5%,0.25W	57668	NTR25J-E910E
A5R858	301-0471-00			RES,FXD,FILM:470 OHM,5%,0.5W	19701	5053CX 470R0J
A5R861	315-0272-00			RES,FXD,FILM:2.7K OHM,5%,0.25W	57668	NTR25J-E02K7
A5R862	315-0390-00			RES,FXD,FILM:39 OHM,5%,0.25W	57668	NTR25J-E39E0
A5R863	321-0189-00			RES,FXD,FILM:909 OHM,1%,0.125W,TC=T2	19701	5033ED909R0F
A5R864	315-0681-00			RES,FXD,FILM:680 OHM,5%,0.25W	57668	NTR25J-E680E
A5R865	315-0681-00			RES,FXD,FILM:680 OHM,5%,0.25W	57668	NTR25J-E680E
A5R866	315-0301-00			RES,FXD,FILM:300 OHM,5%,0.25W	57668	NTR25J-E300E
A5R867	315-0681-00			RES,FXD,FILM:680 OHM,5%,0.25W	57668	NTR25J-E680E
A5R872	315-0103-00			RES,FXD,FILM:10K OHM,5%,0.25W	19701	5043CX10K00J
A5R873	321-0164-00			RES,FXD,FILM:499 OHM,1%,0.125W,TC=T0	19701	5033ED499R0F
A5R874	321-0250-00			RES,FXD,FILM:3.92K OHM,1%,0.125W,TC=T0	07716	CEAD39200F
A5R875	321-0195-00			RES,FXD,FILM:1.05K OHM,1%,0.125W,TC=T0	07716	CEAD10500F
A5R876	321-0230-00			RES,FXD,FILM:2.43K OHM,1%,0.125W,TC=T0	19701	5043ED2K430F
A5R877	321-0171-00			RES,FXD,FILM:590 OHM,1%,0.125W,TC=T0	19701	5033ED590R0F
A5R878	321-0192-00			RES,FXD,FILM:976 OHM,1%,0.125W,TC=T0	19701	5033ED976R0F
A5R882	315-0103-00			RES,FXD,FILM:10K OHM,5%,0.25W	19701	5043CX10K00J
A5R883	315-0153-00			RES,FXD,FILM:15K OHM,5%,0.25W	19701	5043CX15K00J
A5R884	315-0103-00			RES,FXD,FILM:10K OHM,5%,0.25W	19701	5043CX10K00J
A5R885	315-0220-00			RES,FXD,FILM:22 OHM,5%,0.25W	19701	5043CX22R00J
A5R886	315-0102-00			RES,FXD,FILM:1K OHM,5%,0.25W	57668	NTR25JE01K0
A5R887	315-0102-00			RES,FXD,FILM:1K OHM,5%,0.25W	57668	NTR25JE01K0
A5R888	315-0102-00			RES,FXD,FILM:1K OHM,5%,0.25W	57668	NTR25JE01K0
A5R892	315-0182-00			RES,FXD,FILM:1.8K OHM,5%,0.25W	57668	NTR25J-E1K8
A5R901	315-0390-00			RES,FXD,FILM:39 OHM,5%,0.25W	57668	NTR25J-E39E0
A5R903	321-0160-00			RES,FXD,FILM:453 OHM,1%,0.125W,TC=T0	19701	5033ED453R0F
A5R904	321-0160-00			RES,FXD,FILM:453 OHM,1%,0.125W,TC=T0	19701	5033ED453R0F
A5R905	321-0184-00			RES,FXD,FILM:806 OHM,1%,0.125W,TC=T0	19701	5033ED806R0F
A5R906	315-0301-00	B200000	B200154	RES,FXD,FILM:300 OHM,5%,0.25W	57668	NTR25J-E300E
A5R906	315-0471-00	B200155		RES,FXD,FILM:470 OHM,5%,0.25W	57668	NTR25J-E470E
A5R907	315-0681-00	B200000	B200154	RES,FXD,FILM:680 OHM,5%,0.25W	57668	NTR25J-E680E
A5R907	315-0102-00	B200155		RES,FXD,FILM:1K OHM,5%,0.25W	57668	NTR25JE01K0
A5R908	315-0103-00			RES,FXD,FILM:10K OHM,5%,0.25W	19701	5043CX10K00J
A5R909	321-0181-00			RES,FXD,FILM:750 OHM,1%,0.125W,TC=T0	07716	CEAD750R0F
A5R910	321-0222-00			RES,FXD,FILM:2.00K OHM,1%,0.125W,TC=T0	19701	5033ED2K00F
A5R912	321-0209-00			RES,FXD,FILM:1.47K OHM,1%,0.125W,TC=T0	19701	5033ED1K47F
A5R913	321-0150-00			RES,FXD,FILM:357 OHM,1%,0.125W,TC=T0	07716	CEAD357R0F
A5R914	315-0472-00			RES,FXD,FILM:4.7K OHM,5%,0.25W	57668	NTR25J-E04K7
A5R915	315-0221-00			RES,FXD,FILM:220 OHM,5%,0.25W	57668	NTR25J-E220E

http://manoman.sqhill.com

Component No.	Tektronix Part No.	Serial/Assembly No. Effective	Dscont	Name & Description	Mfr. Code	Mfr. Part No.
A5R916	315-0911-00			RES,FXD,FILM:910 OHM,5%,0.25W	57668	NTR25J-E910E
A5R917	301-0471-00			RES,FXD,FILM:470 OHM,5%,0.5W	19701	5053CX 470R0J
A5R918	315-0102-00			RES,FXD,FILM:1K OHM,5%,0.25W	57668	NTR25JE01K0
A5R919	315-0752-00			RES,FXD,FILM:7.5K OHM,5%,0.25W	57668	NTR25J-E07K5
A5R922	321-0129-00			RES,FXD,FILM:215 OHM,1%,0.125W,TC=T0	07716	CEAD215R0F
A5R923	321-0187-00			RES,FXD,FILM:866 OHM,1%,0.125W,TC=T0	07716	CEAD866R0F
A5R924	321-0227-00			RES,FXD,FILM:2.26K OHM,1%,0.125W,TC=T0	01121	RNK2261F
A5R925	321-0284-00			RES,FXD,FILM:8.87K OHM,1%,0.125W,TC=T0	19701	5043ED8K870F
A5R926	315-0201-00			RES,FXD,FILM:200 OHM,5%,0.25W	57668	NTR25J-E200E
A5R927	315-0103-00			RES,FXD,FILM:10K OHM,5%,0.25W	19701	5043CX10K00J
A5R943	315-0102-00			RES,FXD,FILM:1K OHM,5%,0.25W	57668	NTR25JE01K0
A5R944	315-0334-00			RES,FXD,FILM:330K OHM,5%,0.25W	57668	NTR25J-E 330K
A5R945	315-0101-00			RES,FXD,FILM:100 OHM,5%,0.25W	57668	NTR25J-E 100E
A5R948	311-1666-00			RES,VAR,NONWW:PNL,20K OHM,10%,0.5W (STANDARD, OPTION 04 & 07)	01121	24M880
A5R949	315-0361-00			RES,FXD,FILM:360 OHM,5%,0.25W	19701	5043CX360R0J
A5R954	315-0132-00			RES,FXD,FILM:1.3K OHM,5%,0.25W	57668	NTR25J-E01K3
A5R955	315-0182-00			RES,FXD,FILM:1.8K OHM,5%,0.25W	57668	NTR25J-E1K8
A5R956	315-0270-00			RES,FXD,FILM:27 OHM,5%,0.25W	19701	5043CX27R00J
A5R957	315-0102-00			RES,FXD,FILM:1K OHM,5%,0.25W	57668	NTR25JE01K0
A5R958	315-0103-00			RES,FXD,FILM:10K OHM,5%,0.25W	19701	5043CX10K00J
A5R961	315-0393-00			RES,FXD,FILM:39K OHM,5%,0.25W	57668	NTR25J-E39K0
A5R962	315-0562-00			RES,FXD,FILM:5.6K OHM,5%,0.25W	57668	NTR25J-E05K6
A5R965	315-0331-00			RES,FXD,FILM:330 OHM,5%,0.25W	57668	NTR25J-E330E
A5R967	315-0331-00			RES,FXD,FILM:330 OHM,5%,0.25W	57668	NTR25J-E330E
A5R981	315-0472-00			RES,FXD,FILM:4.7K OHM,5%,0.25W	57668	NTR25J-E04K7
A5R982	315-0241-00			RES,FXD,FILM:240 OHM,5%,0.25W	19701	5043CX240R0J
A5R983	315-0102-00			RES,FXD,FILM:1K OHM,5%,0.25W	57668	NTR25JE01K0
A5R985	315-0122-00			RES,FXD,FILM:1.2K OHM,5%,0.25W	57668	NTR25J-E01K2
A5R987	315-0102-00			RES,FXD,FILM:1K OHM,5%,0.25W	57668	NTR25JE01K0
A5R988	315-0392-00			RES,FXD,FILM:3.9K OHM,5%,0.25W	57668	NTR25J-E03K9
A5R992	315-0220-00			RES,FXD,FILM:22 OHM,5%,0.25W	19701	5043CX22R00J
A5R993	315-0220-00			RES,FXD,FILM:22 OHM,5%,0.25W	19701	5043CX22R00J
A5R994	315-0220-00			RES,FXD,FILM:22 OHM,5%,0.25W	19701	5043CX22R00J
A5S510	263-0066-00			SW SL ACTR ASSY:B SOURCE,5 OF 6 POSITION	80009	263-0066-00
A5S515	263-0065-00			SW SL ACTR ASSY:B COUPLING,4 OF 5 POSITION	80009	263-0065-00
A5S530	----- -----			(FURN AS A SET W/R530) (STANDARD, OPTION 04 & 07)		
A5S610	263-0068-00			SW SL ACTR ASSY:A SOURCE,6 OF 6 POSITION	80009	263-0068-00
A5S615	263-0067-00			SW SL ACTR ASSY:A COUPLING,4 OF 6 POSITION	80009	263-0067-00
A5S630	----- -----			(FURN AS A SET W/R630) (STANDARD, OPTION 04 & 07)		
A5TP554	131-0608-00			TERMINAL,PIN:0.365 L X 0.025 BRZ GLD PL (STANDARD, OPTION 04 & 07)	22526	48283-036
A5TP583	131-0608-00			TERMINAL,PIN:0.365 L X 0.025 BRZ GLD PL (STANDARD, OPTION 04 & 07)	22526	48283-036
A5TP600	131-0608-00			TERMINAL,PIN:0.365 L X 0.025 BRZ GLD PL (STANDARD, OPTION 04 & 07)	22526	48283-036
A5TP688	131-0608-00			TERMINAL,PIN:0.365 L X 0.025 BRZ GLD PL (STANDARD, OPTION 04 & 07)	22526	48283-036
A5TP883	131-0608-00			TERMINAL,PIN:0.365 L X 0.025 BRZ GLD PL (STANDARD, OPTION 04 & 07)	22526	48283-036
A5U550	155-0196-00			MICROCKT,INTFC:TRIGGER (STANDARD, OPTION 04 & 07)	80009	155-0196-00
A5U600	156-1150-00			MICROCKT,LINEAR:VOLTAGE REGULATOR,NEGATIVE	04713	MC79L05ACP
A5U650	155-0196-00			MICROCKT,INTFC:TRIGGER (STANDARD, OPTION 04 & 07)	80009	155-0196-00
A5U980	155-0049-02			MICROCKT,DGTL:SWEEP CONTROL,W/LOCKOUT DISABLE FUNCTION (STANDARD, OPTION 04 & 07)	80009	155-0049-02

http://manoman.sqhill.com

Component No.	Tektronix Part No.	Serial/Assembly No. Effective	Dscont	Name & Description	Mfr. Code	Mfr. Part No.
A5VR583	152-0227-00			SEMICOND DVC,DI:ZEN,SI,6.2V,5%,0.4W,DO-7	04713	SZ13903
A5VR685	152-0175-00			SEMICOND DVC,DI:ZEN,SI,5.6V,5%,0.4W,DO-7	14552	TD3810976
A5VR948	152-0278-00			SEMICOND DVC,DI:ZEN,SI,3V,5%,0.4W,DO-7	80009	152-0278-00
A5W860	131-0566-00			BUS,CONDUCTOR:DUMMY RES,0.094 OD X 0.225 L	24546	OMA 07
A5W902	131-0566-00			BUS,CONDUCTOR:DUMMY RES,0.094 OD X 0.225 L	24546	OMA 07
A5W963	131-0566-00			BUS,CONDUCTOR:DUMMY RES,0.094 OD X 0.225 L	24546	OMA 07

http://manoman.sqhill.com

Component No.	Tektronix Part No.	Serial/Assembly No. Effective	Dscont	Name & Description	Mfr. Code	Mfr. Part No.
A6	670-2805-28	B020000	B200191	CIRCUIT BD ASSY:INTERFACE	80009	670-2805-28
A6	670-2805-30	B200192	B200983	CIRCUIT BD ASSY:INTERFACE	80009	670-2805-30
A6	670-2805-32	B200984		CIRCUIT BD ASSY:INTERFACE	80009	670-2805-32
A6	670-2805-30		B200949	CIRCUIT BD ASSY:INTERFACE (WITH DM44)	80009	670-2805-30
A6	670-2805-32	B200950		CIRCUIT BD ASSY:INTERFACE (WITH DM44)	80009	670-2805-32
A6C495	283-0003-00			CAP,FXD,CER DI:0.01UF,+80-20%,150V	59821	D103Z40Z5UJDCEX
A6C496	283-0003-00			CAP,FXD,CER DI:0.01UF,+80-20%,150V	59821	D103Z40Z5UJDCEX
A6C887	283-0003-00			CAP,FXD,CER DI:0.01UF,+80-20%,150V	59821	D103Z40Z5UJDCEX
A6C895	283-0003-00			CAP,FXD,CER DI:0.01UF,+80-20%,150V	59821	D103Z40Z5UJDCEX
A6C897	283-0023-00			CAP,FXD,CER DI:0.1UF,+80-20%,12V	71590	2DDU66B104Z
A6C1000	283-0004-00			CAP,FXD,CER DI:0.02UF,+80-20%,150V	59660	855-558Z5V0203Z
A6C1002	283-0178-00			CAP,FXD,CER DI:0.1UF,20%,100V	05397	C330C104Z1U1CA
A6C1003	281-0637-00			CAP,FXD,CER DI:91PF,5%,500V	52763	2RDPLZ007 91POJU
A6C1008	283-0003-00			CAP,FXD,CER DI:0.01UF,+80-20%,150V	59821	D103Z40Z5UJDCEX
A6C1021	283-0104-00			CAP,FXD,CER DI:2000PF,5%,500V	59660	811-565-B202J
A6C1024	290-0527-00			CAP,FXD,ELCTLT:15UF,20%,20V	05397	T368B156M020AS
A6C1026	281-0523-00			CAP,FXD,CER DI:100PF,20%,350V	52763	2RDPLZ007 100PMU
A6C1030	281-0662-00			CAP,FXD,CER DI:10PF,+/-0.5PF,500V	52763	2RDPLZ007 10PODE
A6C1031	283-0004-00			CAP,FXD,CER DI:0.02UF,+80-20%,150V	59660	855-558Z5V0203Z
A6C1036	283-0023-00			CAP,FXD,CER DI:0.1UF,+80-20%,12V	71590	2DDU66B104Z
A6C1038	290-0527-00			CAP,FXD,ELCTLT:15UF,20%,20V	05397	T368B156M020AS
A6C1062	283-0178-00			CAP,FXD,CER DI:0.1UF,20%,100V	05397	C330C104Z1U1CA
A6C1063	281-0637-00			CAP,FXD,CER DI:91PF,5%,500V	52763	2RDPLZ007 91POJU
A6C1081	283-0004-00			CAP,FXD,CER DI:0.02UF,+80-20%,150V	59660	855-558Z5V0203Z
A6C1084	290-0527-00			CAP,FXD,ELCTLT:15UF,20%,20V	05397	T368B156M020AS
A6C1086	281-0523-00			CAP,FXD,CER DI:100PF,20%,350V	52763	2RDPLZ007 100PMU
A6C1091	283-0004-00			CAP,FXD,CER DI:0.02UF,+80-20%,150V	59660	855-558Z5V0203Z
A6C1095	281-0662-00			CAP,FXD,CER DI:10PF,+/-0.5PF,500V	52763	2RDPLZ007 10PODE
A6C1171	283-0003-00			CAP,FXD,CER DI:0.01UF,+80-20%,150V	59821	D103Z40Z5UJDCEX
A6C1203	283-0023-00			CAP,FXD,CER DI:0.1UF,+80-20%,12V	71590	2DDU66B104Z
A6C1223	283-0104-00			CAP,FXD,CER DI:2000PF,5%,500V	59660	811-565-B202J
A6C1237	290-0807-00			CAP,FXD,ELCTLT:1000UF,+100 -10%,10VDC	TK0020	SL10T102W12X30LL
A6C1239	283-0006-00			CAP,FXD,CER DI:0.02UF,+80-20%,500V	59660	0841545Z5V00203Z
A6C1246	290-0215-00			CAP,FXD,ELCTLT:100UF,+75-10%,25V	56289	30D107G025DD9
A6C1262	281-0064-00			CAP,VAR,PLASTIC:0.25-1.5PF,600V	52769	ER-530-013
A6C1263	281-0526-00			CAP,FXD,CER DI:1.5PF,+/-0.5PF,500V	52763	2RDPLZ007 1P50DS
A6C1264	281-0526-00			CAP,FXD,CER DI:1.5PF,+/-0.5PF,500V	52763	2RDPLZ007 1P50DS
A6C1265	281-0064-00			CAP,VAR,PLASTIC:0.25-1.5PF,600V	52769	ER-530-013
A6C1272	283-0328-00			CAP,FXD,CER DI:0.03UF,+80-20%,200V	05397	C330C303Z2U5CA
A6C1275	283-0002-00			CAP,FXD,CER DI:0.01UF,+80-20%,500V	59821	D103Z40Z5ULADEG
A6C1276	283-0003-00			CAP,FXD,CER DI:0.01UF,+80-20%,150V	59821	D103Z40Z5UJDCEX
A6C1281	283-0024-00			CAP,FXD,CER DI:0.1UF,+80-20%,50V	04222	SR215C104MAA
A6C1282	283-0024-00			CAP,FXD,CER DI:0.1UF,+80-20%,50V	04222	SR215C104MAA
A6C1283	283-0328-00			CAP,FXD,CER DI:0.03UF,+80-20%,200V	05397	C330C303Z2U5CA
A6C1286	283-0003-00			CAP,FXD,CER DI:0.01UF,+80-20%,150V	59821	D103Z40Z5UJDCEX
A6C1288	283-0002-00			CAP,FXD,CER DI:0.01UF,+80-20%,500V	59821	D103Z40Z5ULADEG
A6C1364	285-0686-00			CAP,FXD,PLASTIC:0.068UF,10%,100V	19396	683K01PT605
A6C1373	281-0551-00			CAP,FXD,CER DI:390PF,10%,500V	52763	2RDPLZ007 390PMO
A6C1374	290-0532-00			CAP,FXD,ELCTLT:150UF,20%,6V	05397	T354J157M006AS 2
A6C1375	281-0513-00			CAP,FXD,CER DI:27PF,+/-5.4PF,500V	52763	2RDPLZ007 27POMP
A6C1414	281-0580-00			CAP,FXD,CER DI:470PF,10%,500V	52763	2RDPLZ007 470PMO
A6C1423	283-0000-00			CAP,FXD,CER DI:0.001UF,+100-0%,500V	59660	831-610-Y5U0102P
A6C1432	283-0000-00			CAP,FXD,CER DI:0.001UF,+100-0%,500V	59660	831-610-Y5U0102P
A6C1433	290-0534-00			CAP,FXD,ELCTLT:1UF,20%,35V	05397	T368A105M035AZ
A6C1434	281-0661-00			CAP,FXD,CER DI:0.8PF,+/-0.1PF,500V	52763	2RDPLZ007 0P80BC
A6C1435	281-0064-00			CAP,VAR,PLASTIC:0.25-1.5PF,600V	52769	ER-530-013

http://manoman.sqhill.com

Component No.	Tektronix Part No.	Serial/Assembly No. Effective	Dscont	Name & Description	Mfr. Code	Mfr. Part No.
A6C1437	283-0057-00			CAP,FXD,CER DI:0.1UF,+80-20%,200V	04222	SR306E104ZAA
A6C1443	285-0509-01			CAP,FXD,PPR DI:0.0068UF,20%,5000V	14752	C-2541
A6C1444	285-1040-00			CAP,FXD,PLASTIC:1200PF,10%,4000V	04099	TEK-17A
A6C1452	283-0057-00			CAP,FXD,CER DI:0.1UF,+80-20%,200V	04222	SR306E104ZAA
A6C1455	290-0194-00			CAP,FXD,ELCTLT:10UF,+50-10%,100V	00853	556DC100T100B
A6C1462	290-0527-00			CAP,FXD,ELCTLT:15UF,20%,20V	05397	T368B156M020AS
A6C1465	285-0913-00			CAP,FXD,PLASTIC:3UF,5%,50V	04099	TEK13-10
A6C1472	283-0059-00			CAP,FXD,CER DI:1UF,+80-20%,50V	31433	C330C105M5R5CA
A6C1473	285-0598-00			CAP,FXD,PLASTIC:0.01UF,5%,100V	19396	DU490B103J
A6C1475	281-0816-00			CAP,FXD,CER DI:82 PF,5%,100V	04222	MA106A820JAA
A6C1483	283-0010-00			CAP,FXD,CER DI:0.05UF,+80-20%,50V	04222	SR305E503ZAA
A6C1487	290-0316-00			CAP,FXD,ELCTLT:47UF,20%,35V	05397	T110D476M035AS
A6C1494	290-0523-00			CAP,FXD,ELCTLT:2.2UF,20%,20V	05397	T368A225M020AS
A6C1498	283-0003-00			CAP,FXD,CER DI:0.01UF,+80-20%,150V	59821	D103Z40Z5UJDCEX
A6C1499	283-0004-00			CAP,FXD,CER DI:0.02UF,+80-20%,150V	59660	855-558Z5V0203Z
A6C1503	285-0509-01			CAP,FXD,PPR DI:0.0068UF,20%,5000V	14752	C-2541
A6C1504	285-0509-01			CAP,FXD,PPR DI:0.0068UF,20%,5000V	14752	C-2541
A6C1505	283-0004-00			CAP,FXD,CER DI:0.02UF,+80-20%,150V	59660	855-558Z5V0203Z
A6C1506	283-0043-00			CAP,FXD,CER DI:6800PF,100-0%,3000V	51406	DHA23Z5U682P3KV
A6C1507	283-0004-00			CAP,FXD,CER DI:0.02UF,+80-20%,150V	59660	855-558Z5V0203Z
A6C1508	283-0043-00			CAP,FXD,CER DI:6800PF,100-0%,3000V	51406	DHA23Z5U682P3KV
A6C1512	283-0013-00			CAP,FXD,CER DI:0.01UF,-0+100%,1000V	59660	818-602ZSU0103P
A6C1517	283-0126-00			CAP,FXD,CER DI:82PF,5%,1000V	59660	848-547C0G0820J
A6C1524	285-1040-00			CAP,FXD,PLASTIC:1200PF,10%,4000V	04099	TEK-17A
A6C1526	285-1040-00			CAP,FXD,PLASTIC:1200PF,10%,4000V	04099	TEK-17A
A6C1527	283-0003-00			CAP,FXD,CER DI:0.01UF,+80-20%,150V	59821	D103Z40Z5UJDCEX
A6C1556	283-0003-00			CAP,FXD,CER DI:0.01UF,+80-20%,150V	59821	D103Z40Z5UJDCEX
A6C1557	283-0004-00			CAP,FXD,CER DI:0.02UF,+80-20%,150V	59660	855-558Z5V0203Z
A6C1574	283-0002-00			CAP,FXD,CER DI:0.01UF,+80-20%,500V	59821	D103Z40Z5ULADEG
A6C1710	283-0003-00			CAP,FXD,CER DI:0.01UF,+80-20%,150V (WHEN INSTRUMENT IS EQUIPPED WITH BOTH OPTION 04 AND OPTION 07, ONLY ONE SET OF THESE CAPACITORS IS USED)	59821	D103Z40Z5UJDCEX
A6C1712	290-0560-00			CAP,FXD,ELCTLT:47UF,20%,25V	05397	T368D476M025AS
A6C1713	290-0560-00			CAP,FXD,ELCTLT:47UF,20%,25V	05397	T368D476M025AS
A6C1718	283-0006-00			CAP,FXD,CER DI:0.02UF,+80-20%,500V	59660	0841545Z5V00203Z
A6C1720	283-0183-00	B200192		CAP,FXD,CER DI:0.045UF,20%,500V (STANDARD ONLY)	04222	3422500E453M
A6C1720	283-0000-00			CAP,FXD,CER DI:0.001UF,+100-0%,500V (SEE FOOTNOTE ON C1710)	59660	831-610-Y5U0102P
A6C1721	283-0183-00	B200192		CAP,FXD,CER DI:0.045UF,20%,500V (STANDARD ONLY)	04222	3422500E453M
A6C1721	283-0000-00			CAP,FXD,CER DI:0.001UF,+100-0%,500V (SEE FOOTNOTE ON C1710)	59660	831-610-Y5U0102P
A6C1722	290-0468-00			CAP,FXD,ELCTLT:250UF,+75-10%,150V	56289	68D10470
A6C1723	290-0638-00			CAP,FXD,ELCTLT:1200UF,+75-10%,100V	56289	68D10529
A6C1724	283-0178-00			CAP,FXD,CER DI:0.1UF,20%,100V	05397	C330C104Z1U1CA
A6C1725	283-0004-00			CAP,FXD,CER DI:0.02UF,+80-20%,150V	59660	855-558Z5V0203Z
A6C1735	281-0623-00			CAP,FXD,CER DI:650PF,5%,500V	52763	2RDPLZ007 650PMO
A6C1737	290-0392-00			CAP,FXD,ELCTLT:3.6UF,10%,125V	56289	109D365X9125C2
A6C1743	281-0580-00			CAP,FXD,CER DI:470PF,10%,500V	52763	2RDPLZ007 470PMO
A6C1744	283-0057-00			CAP,FXD,CER DI:0.1UF,+80-20%,200V	04222	SR306E104ZAA
A6C1750	283-0003-00			CAP,FXD,CER DI:0.01UF,+80-20%,150V (SEE FOOTNOTE ON C1710)	59821	D103Z40Z5UJDCEX
A6C1751	290-0584-00			CAP,FXD,ELCTLT:5500UF,+100-10%,30V	56289	68D10491
A6C1757	290-0536-00			CAP,FXD,ELCTLT:10UF,20%,25V TANTALUM	05397	T368B106M025AS
A6C1760	283-0003-00			CAP,FXD,CER DI:0.01UF,+80-20%,150V (SEE FOOTNOTE ON C1710)	59821	D103Z40Z5UJDCEX
A6C1761	290-0584-00			CAP,FXD,ELCTLT:5500UF,+100-10%,30V	56289	68D10491

http://manoman.sqhill.com

Component No.	Tektronix Part No.	Serial/Assembly No. Effective	Dscont	Name & Description	Mfr. Code	Mfr. Part No.
A6C1767	290-0535-00			CAP,FXD,ELCTLT:33UF,20%,10V TANTALUM	56289	196D336X0010KA1
A6C1768	283-0003-00			CAP,FXD,CER DI:0.01UF,+80-20%,150V	59821	D103Z40Z5UJDCEX
A6C1770	283-0003-00			CAP,FXD,CER DI:0.01UF,+80-20%,150V (SEE FOOTNOTE ON C1710)	59821	D103Z40Z5UJDCEX
A6C1771	290-0584-00			CAP,FXD,ELCTLT:5500UF,+100-10%,30V	56289	68D10491
A6C1777	290-0535-00			CAP,FXD,ELCTLT:33UF,20%,10V TANTALUM	56289	196D336X0010KA1
A6C1778	283-0267-00			CAP,FXD,CER DI:0.01UF,20%,500V	59660	0841546Y5500103M
A6C1780	283-0003-00			CAP,FXD,CER DI:0.01UF,+80-20%,150V (SEE FOOTNOTE ON C1710)	59821	D103Z40Z5UJDCEX
A6C1781	290-0570-00			CAP,FXD,ELCTLT:500UF,+75-10%,50V	56289	68D10477
A6C1787	290-0528-00			CAP,FXD,ELCTLT:15UF,20%,50V	05397	T368C156M050AS
A6C1802	283-0003-00			CAP,FXD,CER DI:0.01UF,+80-20%,150V	59821	D103Z40Z5UJDCEX
A6C2079	283-0000-00			CAP,FXD,CER DI:0.001UF,+100-0%,500V	59660	831-610-Y5U0102P
A6C2099	283-0081-00			CAP,FXD,CER DI:0.1UF,+80-20%,25V	59821	2DDU69E104Z
A6CR895	152-0141-02			SEMICOND DVC,DI:SW,SI,30V,150MA,30V,DO-35	03508	DA2527 (1N4152)
A6CR896	152-0141-02			SEMICOND DVC,DI:SW,SI,30V,150MA,30V,DO-35	03508	DA2527 (1N4152)
A6CR897	152-0141-02			SEMICOND DVC,DI:SW,SI,30V,150MA,30V,DO-35	03508	DA2527 (1N4152)
A6CR986	152-0141-02			SEMICOND DVC,DI:SW,SI,30V,150MA,30V,DO-35	03508	DA2527 (1N4152)
A6CR987	152-0141-02			SEMICOND DVC,DI:SW,SI,30V,150MA,30V,DO-35	03508	DA2527 (1N4152)
A6CR1001	152-0141-02			SEMICOND DVC,DI:SW,SI,30V,150MA,30V,DO-35	03508	DA2527 (1N4152)
A6CR1004	152-0141-02			SEMICOND DVC,DI:SW,SI,30V,150MA,30V,DO-35	03508	DA2527 (1N4152)
A6CR1011	152-0141-02			SEMICOND DVC,DI:SW,SI,30V,150MA,30V,DO-35	03508	DA2527 (1N4152)
A6CR1024	152-0141-02			SEMICOND DVC,DI:SW,SI,30V,150MA,30V,DO-35	03508	DA2527 (1N4152)
A6CR1035	152-0141-02			SEMICOND DVC,DI:SW,SI,30V,150MA,30V,DO-35	03508	DA2527 (1N4152)
A6CR1036	152-0141-02			SEMICOND DVC,DI:SW,SI,30V,150MA,30V,DO-35	03508	DA2527 (1N4152)
A6CR1061	152-0141-02			SEMICOND DVC,DI:SW,SI,30V,150MA,30V,DO-35	03508	DA2527 (1N4152)
A6CR1062	152-0141-02			SEMICOND DVC,DI:SW,SI,30V,150MA,30V,DO-35	03508	DA2527 (1N4152)
A6CR1064	152-0141-02			SEMICOND DVC,DI:SW,SI,30V,150MA,30V,DO-35	03508	DA2527 (1N4152)
A6CR1068	152-0141-02			SEMICOND DVC,DI:SW,SI,30V,150MA,30V,DO-35	03508	DA2527 (1N4152)
A6CR1095	152-0141-02			SEMICOND DVC,DI:SW,SI,30V,150MA,30V,DO-35	03508	DA2527 (1N4152)
A6CR1098	152-0141-02			SEMICOND DVC,DI:SW,SI,30V,150MA,30V,DO-35	03508	DA2527 (1N4152)
A6CR1099	152-0141-02			SEMICOND DVC,DI:SW,SI,30V,150MA,30V,DO-35	03508	DA2527 (1N4152)
A6CR1202	152-0141-02			SEMICOND DVC,DI:SW,SI,30V,150MA,30V,DO-35	03508	DA2527 (1N4152)
A6CR1205	152-0141-02			SEMICOND DVC,DI:SW,SI,30V,150MA,30V,DO-35	03508	DA2527 (1N4152)
A6CR1216	152-0141-02			SEMICOND DVC,DI:SW,SI,30V,150MA,30V,DO-35	03508	DA2527 (1N4152)
A6CR1218	152-0141-02			SEMICOND DVC,DI:SW,SI,30V,150MA,30V,DO-35	03508	DA2527 (1N4152)
A6CR1262	152-0322-00			SEMICOND DVC,DI:SCHOTTKY,SI,15V,DO-35	50434	5082-2672
A6CR1263	152-0153-00			SEMICOND DVC,DI:SW,SI,10V,50MA,.DO-7	07263	FD7003
A6CR1264	152-0153-00			SEMICOND DVC,DI:SW,SI,10V,50MA,.DO-7	07263	FD7003
A6CR1265	152-0322-00			SEMICOND DVC,DI:SCHOTTKY,SI,15V,DO-35	50434	5082-2672
A6CR1271	152-0141-02			SEMICOND DVC,DI:SW,SI,30V,150MA,30V,DO-35	03508	DA2527 (1N4152)
A6CR1281	152-0141-02			SEMICOND DVC,DI:SW,SI,30V,150MA,30V,DO-35	03508	DA2527 (1N4152)
A6CR1285	152-0141-02			SEMICOND DVC,DI:SW,SI,30V,150MA,30V,DO-35	03508	DA2527 (1N4152)
A6CR1364	152-0141-02			SEMICOND DVC,DI:SW,SI,30V,150MA,30V,DO-35	03508	DA2527 (1N4152)
A6CR1372	152-0141-02			SEMICOND DVC,DI:SW,SI,30V,150MA,30V,DO-35	03508	DA2527 (1N4152)
A6CR1401	152-0141-02			SEMICOND DVC,DI:SW,SI,30V,150MA,30V,DO-35	03508	DA2527 (1N4152)
A6CR1405	152-0333-00			SEMICOND DVC,DI:SW,SI,55V,200MA,DO-35	07263	FDH-6012
A6CR1411	152-0141-02			SEMICOND DVC,DI:SW,SI,30V,150MA,30V,DO-35	03508	DA2527 (1N4152)
A6CR1412	152-0153-00			SEMICOND DVC,DI:SW,SI,10V,50MA,.DO-7	07263	FD7003
A6CR1413	152-0141-02			SEMICOND DVC,DI:SW,SI,30V,150MA,30V,DO-35	03508	DA2527 (1N4152)
A6CR1425	152-0141-02			SEMICOND DVC,DI:SW,SI,30V,150MA,30V,DO-35	03508	DA2527 (1N4152)
A6CR1427	152-0333-00			SEMICOND DVC,DI:SW,SI,55V,200MA,DO-35	07263	FDH-6012
A6CR1432	152-0061-00			SEMICOND DVC,DI:SW,SI,175V,0.1A,DO-35	07263	FDH2161
A6CR1439	152-0061-00			SEMICOND DVC,DI:SW,SI,175V,0.1A,DO-35	07263	FDH2161
A6CR1442	152-0061-00			SEMICOND DVC,DI:SW,SI,175V,0.1A,DO-35	07263	FDH2161
A6CR1444	152-0242-00			SEMICOND DVC,DI:SIG,SI,225V,0.2A,DO-7	07263	FDH5004
A6CR1445	152-0242-00			SEMICOND DVC,DI:SIG,SI,225V,0.2A,DO-7	07263	FDH5004
A6CR1452	152-0061-00			SEMICOND DVC,DI:SW,SI,175V,0.1A,DO-35	07263	FDH2161

http://manoman.sqhill.com

Component No.	Tektronix Part No.	Serial/Assembly No. Effective	Dscont	Name & Description	Mfr. Code	Mfr. Part No.
A6CR1454	152-0061-00			SEMICOND DVC,DI:SW,SI,175V,0.1A,DO-35	07263	FDH2161
A6CR1461	152-0141-02			SEMICOND DVC,DI:SW,SI,30V,150MA,30V,DO-35	03508	DA2527 (1N4152)
A6CR1462	152-0075-00			SEMICOND DVC,DI:SW,GE,22V,80MW,DO-7	14433	G866
A6CR1466	152-0141-02			SEMICOND DVC,DI:SW,SI,30V,150MA,30V,DO-35	03508	DA2527 (1N4152)
A6CR1477	152-0141-02			SEMICOND DVC,DI:SW,SI,30V,150MA,30V,DO-35	03508	DA2527 (1N4152)
A6CR1482	152-0141-02			SEMICOND DVC,DI:SW,SI,30V,150MA,30V,DO-35	03508	DA2527 (1N4152)
A6CR1486	152-0333-00			SEMICOND DVC,DI:SW,SI,55V,200MA,DO-35	07263	FDH-6012
A6CR1497	152-0141-02			SEMICOND DVC,DI:SW,SI,30V,150MA,30V,DO-35	03508	DA2527 (1N4152)
A6CR1503	152-0409-00			SEMICOND DVC,DI:RECT,SI,12KV,35MA,2NS	83003	VG12X-1
A6CR1506	152-0409-00			SEMICOND DVC,DI:RECT,SI,12KV,35MA,2NS	83003	VG12X-1
A6CR1507	152-0409-00			SEMICOND DVC,DI:RECT,SI,12KV,35MA,2NS	83003	VG12X-1
A6CR1512	152-0331-00			SEMICOND DVC,DI:RECT,SI,1,500 25MA	TK0191	152-0331-00
A6CR1533	152-0061-00			SEMICOND DVC,DI:SW,SI,175V,0.1A,DO-35	07263	FDH2161
A6CR1535	152-0246-00			SEMICOND DVC,DI:SW,SI,40V,200MA,DO-7	14433	WG1537TK
A6CR1536	152-0246-00			SEMICOND DVC,DI:SW,SI,40V,200MA,DO-7	14433	WG1537TK
A6CR1543	152-0246-00			SEMICOND DVC,DI:SW,SI,40V,200MA,DO-7	14433	WG1537TK
A6CR1552	152-0061-00			SEMICOND DVC,DI:SW,SI,175V,0.1A,DO-35	07263	FDH2161
A6CR1554	152-0141-02			SEMICOND DVC,DI:SW,SI,30V,150MA,30V,DO-35	03508	DA2527 (1N4152)
A6CR1562	152-0061-00			SEMICOND DVC,DI:SW,SI,175V,0.1A,DO-35	07263	FDH2161
A6CR1564	152-0141-02			SEMICOND DVC,DI:SW,SI,30V,150MA,30V,DO-35	03508	DA2527 (1N4152)
A6CR1573	152-0061-00			SEMICOND DVC,DI:SW,SI,175V,0.1A,DO-35	07263	FDH2161
A6CR1711	152-0107-00			SEMICOND DVC,DI:RECT,SI,400 V,400MA,A1	12969	"G727"
A6CR1712	152-0107-00			SEMICOND DVC,DI:RECT,SI,400 V,400MA,A1	12969	"G727"
A6CR1717	152-0107-00			SEMICOND DVC,DI:RECT,SI,400 V,400MA,A1	12969	"G727"
A6CR1718	152-0066-00			SEMICOND DVC,DI:RECT,SI,400V,1A,DO-41	05828	GP10G-020
A6CR1719	152-0066-00			SEMICOND DVC,DI:RECT,SI,400V,1A,DO-41	05828	GP10G-020
A6CR1721	152-0497-00			SEMICOND DVC,DI:RECT,SI,600V,1.5A	04713	SDA318
A6CR1723	152-0061-00			SEMICOND DVC,DI:SW,SI,175V,0.1A,DO-35	07263	FDH2161
A6CR1724	152-0141-02			SEMICOND DVC,DI:SW,SI,30V,150MA,30V,DO-35	03508	DA2527 (1N4152)
A6CR1732	152-0141-02			SEMICOND DVC,DI:SW,SI,30V,150MA,30V,DO-35	03508	DA2527 (1N4152)
A6CR1733	152-0141-02			SEMICOND DVC,DI:SW,SI,30V,150MA,30V,DO-35	03508	DA2527 (1N4152)
A6CR1734	152-0066-00			SEMICOND DVC,DI:RECT,SI,400V,1A,DO-41	05828	GP10G-020
A6CR1737	152-0066-00			SEMICOND DVC,DI:RECT,SI,400V,1A,DO-41	05828	GP10G-020
A6CR1751	152-0556-00			SEMICOND DVC,DI:RECT,SI,50,2.5A	14936	KBU4A
A6CR1757	152-0066-00			SEMICOND DVC,DI:RECT,SI,400V,1A,DO-41	05828	GP10G-020
A6CR1761	152-0556-00			SEMICOND DVC,DI:RECT,SI,50,2.5A	14936	KBU4A
A6CR1767	152-0066-00			SEMICOND DVC,DI:RECT,SI,400V,1A,DO-41	05828	GP10G-020
A6CR1771	152-0488-00			SEMICOND DVC,DI:RECT,SI,200V,0.5A	04713	SDA317
A6CR1777	152-0066-00			SEMICOND DVC,DI:RECT,SI,400V,1A,DO-41	05828	GP10G-020
A6CR1781	152-0488-00			SEMICOND DVC,DI:RECT,SI,200V,0.5A	04713	SDA317
A6CR1787	152-0066-00			SEMICOND DVC,DI:RECT,SI,400V,1A,DO-41	05828	GP10G-020
A6DS1524	150-0002-00			LAMP,GLOW:90V MAX,0.5MA,AIA-T,WIRE LD	74276	NE-2T(T2)
A6DS1525	150-0002-00			LAMP,GLOW:90V MAX,0.5MA,AIA-T,WIRE LD	74276	NE-2T(T2)
A6F1487	159-0016-00			FUSE,CARTRIDGE:3AG,1.5,250V,FAST BLOW	71400	AGC-CW-1 1/2
A6J1	136-0499-14			CONN,RCPT,ELEC:CIRCUIT BD,14 CONTACTS	00779	4-380949-4
A6J2	136-0499-16			CONN,RCPT,ELEC:CIRCUIT BD,16 CONTACTS	00779	4-380949-6
A6J8	136-0577-00			CONN,RCPT,ELEC:CKT BOARD,15 CONTACT	22526	65001-015
A6K1501	108-0663-00			COIL,REED SW:12V,20MA,SINGLE REED	71707	SP-12-P
A6L1374	108-0245-00			CHOKE,RF:FIXED,3.9UH	76493	B6310-1
A6L1487	108-0422-00			COIL,RF:FIXED,80UH	80009	108-0422-00
A6L2099	108-0538-00			COIL,RF:FIXED,2.7UH	76493	JWM#B7059
A6Q984	151-0188-00			TRANSISTOR:PNP,SI,TO-92	80009	151-0188-00
A6Q1002	151-0354-00			TRANSISTOR:PNP,SI,TO-78	32293	ITS-1200-A
A6Q1006	151-0220-00			TRANSISTOR:PNP,SI,TO-92	80009	151-0220-00
A6Q1024	151-0283-00			TRANSISTOR:NPN,SI,TO-72	04713	SRF478
A6Q1030	151-1025-00			TRANSISTOR:FET,N-CHAN,SI,TO-92	04713	SPF3036
A6Q1036	151-0127-00			TRANSISTOR:NPN,SI,TO-18	04713	SL6073A
A6Q1038	151-0188-00			TRANSISTOR:PNP,SI,TO-92	80009	151-0188-00

http://manoman.sqhill.com

Component No.	Tektronix Part No.	Serial/Assembly No. Effective	Dscont	Name & Description	Mfr. Code	Mfr. Part No.
A6Q1062	151-0354-00			TRANSISTOR:PNP,SI,TO-78	32293	ITS-1200-A
A6Q1064	151-0188-00			TRANSISTOR:PNP,SI,TO-92	80009	151-0188-00
A6Q1066	151-0220-00			TRANSISTOR:PNP,SI,TO-92	80009	151-0220-00
A6Q1084	151-0283-00			TRANSISTOR:NPN,SI,TO-72	04713	SRF478
A6Q1090	151-1025-00			TRANSISTOR:FET,N-CHAN,SI,TO-92	04713	SPF3036
A6Q1096	151-0127-00			TRANSISTOR:NPN,SI,TO-18	04713	SL6073A
A6Q1098	151-0188-00			TRANSISTOR:PNP,SI,TO-92	80009	151-0188-00
A6Q1212	151-0220-00			TRANSISTOR:PNP,SI,TO-92	80009	151-0220-00
A6Q1222	151-0410-00			TRANSISTOR:PNP,SI,TO-92	04713	SPS6765
A6Q1232	151-0190-02			TRANSISTOR:NPN,SI,TO-92	04713	SPS3319(2N3904)
A6Q1236	151-0188-00			TRANSISTOR:PNP,SI,TO-92	80009	151-0188-00
A6Q1242	151-0190-02			TRANSISTOR:NPN,SI,TO-92	04713	SPS3319(2N3904)
A6Q1246	151-0188-00			TRANSISTOR:PNP,SI,TO-92	80009	151-0188-00
A6Q1272	151-0220-00			TRANSISTOR:PNP,SI,TO-92	80009	151-0220-00
A6Q1274	151-0406-00			TRANSISTOR:PNP,SI,TO-39	04713	ST1264
A6Q1276	151-0407-00			TRANSISTOR:NPN,SI,TO-39	80009	151-0407-00
A6Q1282	151-0223-00			TRANSISTOR:NPN,SI,625MW,TO-92	04713	SPS8026
A6Q1284	151-0407-00			TRANSISTOR:NPN,SI,TO-39	80009	151-0407-00
A6Q1286	151-0406-00			TRANSISTOR:PNP,SI,TO-39	04713	ST1264
A6Q1362	151-0342-00			TRANSISTOR:PNP,SI,TO-92	07263	S035928
A6Q1372	151-0342-00			TRANSISTOR:PNP,SI,TO-92	07263	S035928
A6Q1376	151-0164-00			TRANSISTOR:PNP,SI,TO-92	04713	2N2907A
A6Q1424	151-0223-00			TRANSISTOR:NPN,SI,625MW,TO-92	04713	SPS8026
A6Q1428	151-0188-00			TRANSISTOR:PNP,SI,TO-92	80009	151-0188-00
A6Q1432	151-0407-00			TRANSISTOR:NPN,SI,TO-39	80009	151-0407-00
A6Q1436	151-0406-00			TRANSISTOR:PNP,SI,TO-39	04713	ST1264
A6Q1472	151-0126-00			TRANSISTOR:NPN,SI,TO-18	04713	ST1046
A6Q1476	151-0301-00			TRANSISTOR:PNP,SI,TO-18	04713	ST898
A6Q1484	151-0136-00			TRANSISTOR:NPN,SI,TO-39	02735	35495
A6Q1492	151-0302-00			TRANSISTOR:NPN,SI,TO-18	04713	ST899
A6Q1496	151-0301-00			TRANSISTOR:PNP,SI,TO-18	04713	ST898
A6Q1718	151-0347-00			TRANSISTOR:NPN,SI,TO-92	04713	SPS7951
A6Q1732	151-0347-00			TRANSISTOR:NPN,SI,TO-92	04713	SPS7951
A6Q1736	151-0347-00			TRANSISTOR:NPN,SI,TO-92	04713	SPS7951
A6Q1752	151-0136-00			TRANSISTOR:NPN,SI,TO-39	02735	35495
A6Q1754	151-0302-00			TRANSISTOR:NPN,SI,TO-18	04713	ST899
A6Q1762	151-0302-00			TRANSISTOR:NPN,SI,TO-18	04713	ST899
A6Q1764	151-0302-00			TRANSISTOR:NPN,SI,TO-18	04713	ST899
A6Q1772	151-0302-00			TRANSISTOR:NPN,SI,TO-18	04713	ST899
A6Q1774	151-0302-00			TRANSISTOR:NPN,SI,TO-18	04713	ST899
A6Q1780	151-0341-00			TRANSISTOR:NPN,SI,TO-106	04713	SPS6919
A6Q1782	151-0341-00			TRANSISTOR:NPN,SI,TO-106	04713	SPS6919
A6Q1784	151-0302-00			TRANSISTOR:NPN,SI,TO-18	04713	ST899
A6Q1786	151-0302-00			TRANSISTOR:NPN,SI,TO-18	04713	ST899
A6Q1802	151-0190-00			TRANSISTOR:NPN,SI,TO-92	80009	151-0190-00
A6R498	301-0751-00			RES,FXD,FILM:750 OHM,5%,0.5W	19701	5053CX750R0J
A6R895	321-0210-00			RES,FXD,FILM:1.50K OHM,1%,0.125W,TC=T0	19701	5033ED1K50F
A6R984	315-0122-00			RES,FXD,FILM:1.2K OHM,5%,0.25W	57668	NTR25J-E01K2
A6R986	315-0103-00			RES,FXD,FILM:10K OHM,5%,0.25W	19701	5043CX10K00J
A6R1001	315-0360-00			RES,FXD,FILM:36 OHM,5%,0.25W	19701	5043CX36R00J
A6R1002	303-0562-00			RES,FXD,CMPSN:5.6K OHM,5%,1W	01121	GB5625
A6R1003	315-0101-00			RES,FXD,FILM:100 OHM,5%,0.25W	57668	NTR25J-E 100E
A6R1004	315-0360-00			RES,FXD,FILM:36 OHM,5%,0.25W	19701	5043CX36R00J
A6R1005	315-0220-00			RES,FXD,FILM:22 OHM,5%,0.25W	19701	5043CX22R00J
A6R1006	315-0560-00			RES,FXD,FILM:56 OHM,5%,0.25W	57668	NTR25J-E56E0
A6R1008	321-0223-00			RES,FXD,FILM:2.05K OHM,1%,0.125W,TC=T0	19701	5033ED2K05F
A6R1021	321-0193-00			RES,FXD,FILM:1K OHM,1%,0.125W,TC=T0	19701	5033ED1K00F
A6R1022	321-0193-00			RES,FXD,FILM:1K OHM,1%,0.125W,TC=T0	19701	5033ED1K00F

http://manoman.sqhill.com

Component No.	Tektronix Part No.	Serial/Assembly No. Effective	Dscont	Name & Description	Mfr. Code	Mfr. Part No.
A6R1024	321-0165-00			RES,FXD,FILM:511 OHM,1%,0.125W,TC=T0	07716	CEAD511R0F
A6R1026	315-0181-00			RES,FXD,FILM:180 OHM,5%,0.25W	57668	NTR25J-E180E
A6R1029	315-0101-00			RES,FXD,FILM:100 OHM,5%,0.25W	57668	NTR25J-E 100E
A6R1031	315-0470-00			RES,FXD,FILM:47 OHM,5%,0.25W	57668	NTR25J-E47E0
A6R1032	315-0101-00			RES,FXD,FILM:100 OHM,5%,0.25W	57668	NTR25J-E 100E
A6R1033	321-0256-00			RES,FXD,FILM:4.53K OHM,1%,0.125W,TC=T9	19701	5033ED4K530F
A6R1035	315-0101-00			RES,FXD,FILM:100 OHM,5%,0.25W	57668	NTR25J-E 100E
A6R1036	315-0561-00			RES,FXD,FILM:560 OHM,5%,0.25W	19701	5043CX560R0J
A6R1037	321-0251-01			RES,FXD,FILM:4.02K OHM,0.5%,0.125W,TC=T0	07716	CEAD40200D
A6R1038	315-0470-00			RES,FXD,FILM:47 OHM,5%,0.25W	57668	NTR25J-E47E0
A6R1039	321-0228-00			RES,FXD,FILM:2.32K OHM,1%,0.125W,TC=T0	19701	5043ED2K32F
A6R1060	315-0101-00			RES,FXD,FILM:100 OHM,5%,0.25W	57668	NTR25J-E 100E
A6R1061	315-0360-00			RES,FXD,FILM:36 OHM,5%,0.25W	19701	5043CX36R00J
A6R1062	301-0562-00			RES,FXD,FILM:5.6K OHM,5%,0.5W	19701	5053CX5K600J
A6R1063	315-0101-00			RES,FXD,FILM:100 OHM,5%,0.25W	57668	NTR25J-E 100E
A6R1064	315-0360-00			RES,FXD,FILM:36 OHM,5%,0.25W	19701	5043CX36R00J
A6R1065	315-0220-00			RES,FXD,FILM:22 OHM,5%,0.25W	19701	5043CX22R00J
A6R1066	315-0560-00			RES,FXD,FILM:56 OHM,5%,0.25W	57668	NTR25J-E56E0
A6R1067	315-0101-00			RES,FXD,FILM:100 OHM,5%,0.25W	57668	NTR25J-E 100E
A6R1068	315-0181-00			RES,FXD,FILM:180 OHM,5%,0.25W	57668	NTR25J-E180E
A6R1069	315-0151-00	B200984		RES,FXD,FILM:150 OHM,5%,0.25W	57668	NTR25J-E150E
A6R1069	315-0151-00	B200950		RES,FXD,FILM:150 OHM,5%,0.25W (WITH DM44)	57668	NTR25J-E150E
A6R1070	315-0151-00	B200984		RES,FXD,FILM:150 OHM,5%,0.25W	57668	NTR25J-E150E
A6R1070	315-0151-00	B200950		RES,FXD,FILM:150 OHM,5%,0.25W (WITH DM44)	57668	NTR25J-E150E
A6R1081	321-0193-00			RES,FXD,FILM:1K OHM,1%,0.125W,TC=T0	19701	5033ED1K00F
A6R1082	321-0193-00			RES,FXD,FILM:1K OHM,1%,0.125W,TC=T0	19701	5033ED1K00F
A6R1084	321-0165-00			RES,FXD,FILM:511 OHM,1%,0.125W,TC=T0	07716	CEAD511R0F
A6R1086	315-0181-00			RES,FXD,FILM:180 OHM,5%,0.25W	57668	NTR25J-E180E
A6R1089	315-0101-00			RES,FXD,FILM:100 OHM,5%,0.25W	57668	NTR25J-E 100E
A6R1091	315-0470-00			RES,FXD,FILM:47 OHM,5%,0.25W	57668	NTR25J-E47E0
A6R1092	315-0101-00			RES,FXD,FILM:100 OHM,5%,0.25W	57668	NTR25J-E 100E
A6R1093	321-0256-00			RES,FXD,FILM:4.53K OHM,1%,0.125W,TC=T9	19701	5033ED4K530F
A6R1095	315-0101-00			RES,FXD,FILM:100 OHM,5%,0.25W	57668	NTR25J-E 100E
A6R1097	321-0251-01			RES,FXD,FILM:4.02K OHM,0.5%,0.125W,TC=T0	07716	CEAD40200D
A6R1098	321-0229-00			RES,FXD,FILM:2.37K OHM,1%,0.125W,TC=T0	19701	5043ED2K37F
A6R1099	315-0561-00			RES,FXD,FILM:560 OHM,5%,0.25W	19701	5043CX560R0J
A6R1141	315-0331-00			RES,FXD,FILM:330 OHM,5%,0.25W	57668	NTR25J-E330E
A6R1203	315-0471-00			RES,FXD,FILM:470 OHM,5%,0.25W	57668	NTR25J-E470E
A6R1205	321-0212-00			RES,FXD,FILM:1.58K OHM,1%,0.125W,TC=70	19701	5033ED1K58F
A6R1212	321-0126-00			RES,FXD,FILM:200 OHM,1%,0.125W,TC=T0	19701	5033ED200R0F
A6R1213	321-0255-00			RES,FXD,FILM:4.42K OHM,1%,0.125W,TC=T0	19701	5033ED4K420F
A6R1214	311-1222-00			RES,VAR,NONWW:TRMR,100 OHM,0.5W	32997	3386F-T04-101
A6R1215	315-0102-00			RES,FXD,FILM:1K OHM,5%,0.25W	57668	NTR25JE01K0
A6R1216	321-0174-00			RES,FXD,FILM:634 OHM,1%,0.125W,TC=T0	07716	CEAD634R0F
A6R1217	321-0147-00			RES,FXD,FILM:332 OHM,1%,0.125W,TC=T0	07716	CEAD332R0F
A6R1218	315-0821-00			RES,FXD,FILM:820 OHM,5%,0.25W	19701	5043CX820R0J
A6R1222	321-0164-00			RES,FXD,FILM:499 OHM,1%,0.125W,TC=T0	19701	5033ED499R0F
A6R1223	315-0332-00			RES,FXD,FILM:3.3K OHM,5%,0.25W	57668	NTR25J-E03K3
A6R1232	321-0178-00			RES,FXD,FILM:698 OHM,1%,0.125W,TC=T0	07716	CEAD698R0F
A6R1233	321-0184-00			RES,FXD,FILM:806 OHM,1%,0.125W,TC=T0	19701	5033ED806R0F
A6R1234	322-0184-00			RES,FXD,FILM:806 OHM,1%,0.25W,TC=T0	75042	CEBT0-8060F
A6R1236	323-0158-00			RES,FXD,FILM:432 OHM,1%,0.5W,TC=T0	75042	CECT0-4320F
A6R1237	307-0106-00			RES,FXD,CMPSN:4.7 OHM,5%,0.25W	01121	CB 47G5
A6R1238	321-0228-00			RES,FXD,FILM:2.32K OHM,1%,0.125W,TC=T0	19701	5043ED2K32F
A6R1239	315-0331-00			RES,FXD,FILM:330 OHM,5%,0.25W	57668	NTR25J-E330E
A6R1242	321-0225-00			RES,FXD,FILM:2.15K OHM,1%,0.125W,TC=T0	19701	5033ED2K15F

http://manoman.sqhill.com

Component No.	Tektronix Part No.	Serial/Assembly No. Effective	Dscont	Name & Description	Mfr. Code	Mfr. Part No.
A6R1243	315-0270-00			RES,FXD,FILM:27 OHM,5%,0.25W	19701	5043CX27R00J
A6R1244	321-0184-00			RES,FXD,FILM:806 OHM,1%,0.125W,TC=T0	19701	5033ED806R0F
A6R1245	322-0184-00			RES,FXD,FILM:806 OHM,1%,0.25W,TC=T0	75042	CEBT0-8060F
A6R1246	321-0097-00			RES,FXD,FILM:100 OHM,1%,0.125W,TC=T0	91637	CMF55116G100R0F
A6R1247	321-0228-00			RES,FXD,FILM:2.32K OHM,1%,0.125W,TC=T0	19701	5043ED2K32F
A6R1252	321-0210-00			RES,FXD,FILM:1.50K OHM,1%,0.125W,TC=T0	19701	5033ED1K50F
A6R1253	311-1222-00			RES,VAR,NONWW:TRMR,100 OHM,0.5W	32997	3386F-T04-101
A6R1254	323-0303-00			RES,FXD,FILM:14.0K OHM,1%,0.5W,TC=T0	75042	CECT0-1402F
A6R1255	311-1226-00			RES,VAR,NONWW:TRMR,2.5K OHM,0.5W	32997	3386F-T04-252
A6R1256	323-0303-00			RES,FXD,FILM:14.0K OHM,1%,0.5W,TC=T0	75042	CECT0-1402F
A6R1257	311-1225-00			RES,VAR,NONWW:TRMR,1K OHM,0.5W	32997	3386F-T04-102
A6R1258	321-0111-00			RES,FXD,FILM:140 OHM,1%,0.125W,TC=T0	07716	CEAD140R0F
A6R1262	323-0309-00			RES,FXD,FILM:16.2K OHM,1%,0.5W,TC=T0	75042	CECT0-1622F
A6R1263	322-0280-00			RES,FXD,FILM:8.06K OHM,1%,0.25W,TC=T0	56845	MFF1421G80600F
A6R1264	322-0280-00			RES,FXD,FILM:8.06K OHM,1%,0.25W,TC=T0	56845	MFF1421G80600F
A6R1265	323-0309-00			RES,FXD,FILM:16.2K OHM,1%,0.5W,TC=T0	75042	CECT0-1622F
A6R1266	315-0333-00			RES,FXD,FILM:33K OHM,5%,0.25W	57668	NTR25J-E33K0
A6R1267	315-0333-00			RES,FXD,FILM:33K OHM,5%,0.25W	57668	NTR25J-E33K0
A6R1268	321-0347-00			RES,FXD,FILM:40.2K OHM,1%,0.125W,TC=T0	91637	CMF55116G40201F
A6R1271	315-0301-00			RES,FXD,FILM:300 OHM,5%,0.25W	57668	NTR25J-E300E
A6R1272	301-0393-00			RES,FXD,FILM:39K OHM,5%,0.5W	19701	5053CX39K00J
A6R1273	315-0621-00			RES,FXD,FILM:620 OHM,5%,0.25W	57668	NTR25J-E620E
A6R1274	317-0911-00			RES,FXD,CMPSN:910 OHM,5%,0.125W	01121	BB9115
A6R1275	315-0470-00			RES,FXD,FILM:47 OHM,5%,0.25W	57668	NTR25J-E47E0
A6R1276	315-0470-00			RES,FXD,FILM:47 OHM,5%,0.25W	57668	NTR25J-E47E0
A6R1277	315-0101-00			RES,FXD,FILM:100 OHM,5%,0.25W	57668	NTR25J-E 100E
A6R1278	315-0333-00			RES,FXD,FILM:33K OHM,5%,0.25W	57668	NTR25J-E33K0
A6R1281	301-0471-00			RES,FXD,FILM:470 OHM,5%,0.5W	19701	5053CX 470R0J
A6R1282	315-0751-00			RES,FXD,FILM:750 OHM,5%,0.25W	57668	NTR25J-E750E
A6R1283	301-0393-00			RES,FXD,FILM:39K OHM,5%,0.5W	19701	5053CX39K00J
A6R1284	317-0911-00			RES,FXD,CMPSN:910 OHM,5%,0.125W	01121	BB9115
A6R1285	315-0621-00			RES,FXD,FILM:620 OHM,5%,0.25W	57668	NTR25J-E620E
A6R1286	315-0470-00			RES,FXD,FILM:47 OHM,5%,0.25W	57668	NTR25J-E47E0
A6R1287	315-0101-00			RES,FXD,FILM:100 OHM,5%,0.25W	57668	NTR25J-E 100E
A6R1288	315-0470-00			RES,FXD,FILM:47 OHM,5%,0.25W	57668	NTR25J-E47E0
A6R1362	315-0512-00			RES,FXD,FILM:5.1K OHM,5%,0.25W	57668	NTR25J-E05K1
A6R1363	315-0273-00			RES,FXD,FILM:27K OHM,5%,0.25W	57668	NTR25J-E27K0
A6R1364	315-0913-00			RES,FXD,FILM:91K OHM,5%,0.25W	19701	5043CX91K00J
A6R1365	315-0752-00			RES,FXD,FILM:7.5K OHM,5%,0.25W	57668	NTR25J-E07K5
A6R1367	315-0912-00			RES,FXD,FILM:9.1K OHM,5%,0.25W	57668	NTR25J-E09K1
A6R1372	315-0913-00			RES,FXD,FILM:91K OHM,5%,0.25W	19701	5043CX91K00J
A6R1373	315-0512-00			RES,FXD,FILM:5.1K OHM,5%,0.25W	57668	NTR25J-E05K1
A6R1375	311-1221-00			RES,VAR,NONWW:TRMR,50 OHM,0.5W	32997	3386F-T04-500
A6R1376	321-0107-00			RES,FXD,FILM:127 OHM,1%,0.125W,TC=T0	07716	CEAD127R0F
A6R1377	321-0001-00			RES,FXD,FILM:10 OHM,1%,0.125W,TC=T0	19701	5033RD10R00FMS
A6R1402	315-0272-00			RES,FXD,FILM:2.7K OHM,5%,0.25W	57668	NTR25J-E02K7
A6R1403	311-1718-00			RES,VAR,NONWW:PNL,5K OHM,1W,W/SW (FURN AS A SET W/S1403)	01121	18M938
A6R1404	315-0332-00			RES,FXD,FILM:3.3K OHM,5%,0.25W	57668	NTR25J-E03K3
A6R1405	301-0752-00			RES,FXD,FILM:7.5K OHM,5%,0.5W	19701	5053CX7K500J
A6R1406	311-1245-00			RES,VAR,NONWW:TRMR,10K OHM,0.5W	32997	3386X-DY6-103
A6R1407	315-0202-00			RES,FXD,FILM:2K OHM,5%,0.25W	57668	NTR25J-E 2K
A6R1413	315-0302-00			RES,FXD,FILM:3K OHM,5%,0.25W	57668	NTR25J-E03K0
A6R1414	301-0243-00			RES,FXD,FILM:24K OHM,5%,0.5W	19701	5053CX24K00J
A6R1416	315-0221-00			RES,FXD,FILM:220 OHM,5%,0.25W	57668	NTR25J-E220E
A6R1417	315-0470-00			RES,FXD,FILM:47 OHM,5%,0.25W	57668	NTR25J-E47E0
A6R1422	321-0262-00			RES,FXD,FILM:5.23K OHM,1,0.125W,TC=T0	19701	5033ED5K230F
A6R1423	321-0210-00			RES,FXD,FILM:1.50K OHM,1%,0.125W,TC=T0	19701	5033ED1K50F

http://manoman.sqhill.com

Component No.	Tektronix Part No.	Serial/Assembly No. Effective	Dscont	Name & Description	Mfr. Code	Mfr. Part No.
A6R1424	315-0153-00			RES,FXD,FILM:15K OHM,5%,0.25W	19701	5043CX15K00J
A6R1425	321-0297-00			RES,FXD,FILM:12.1K OHM,1%,0.125W,TC=T0	07716	CEAD12101F
A6R1427	315-0102-00			RES,FXD,FILM:1K OHM,5%,0.25W	57668	NTR25JE01K0
A6R1428	315-0101-00			RES,FXD,FILM:100 OHM,5%,0.25W	57668	NTR25J-E 100E
A6R1431	315-0391-00			RES,FXD,FILM:390 OHM,5%,0.25W	57668	NTR25J-E390E
A6R1432	317-0102-00			RES,FXD,CMPSN:1K OHM,5%,0125W	01121	BB1025
A6R1433	317-0101-00			RES,FXD,CMPSN:100 OHM,5%,0.125W	01121	BB1015
A6R1434	321-0249-00			RES,FXD,FILM:3.83K OHM,1%,0.125W,TC=T0	19701	5033ED3K83F
A6R1435	323-0322-00			RES,FXD,FILM:22.1K OHM,1%,0.5W,TC=T0	75042	CECT0-2212F
A6R1436	315-0102-00			RES,FXD,FILM:1K OHM,5%,0.25W	57668	NTR25JE01K0
A6R1437	317-0911-00			RES,FXD,CMPSN:910 OHM,5%,0.125W	01121	BB9115
A6R1439	301-0393-00			RES,FXD,FILM:39K OHM,5%,0.5W	19701	5053CX39K00J
A6R1442	315-0102-03			RES,FXD,CMPSN:1K OHM,5%,0.25W	01121	CB1025
A6R1443	315-0221-00			RES,FXD,FILM:220 OHM,5%,0.25W	57668	NTR25J-E220E
A6R1444	315-0102-03			RES,FXD,CMPSN:1K OHM,5%,0.25W	01121	CB1025
A6R1445	315-0226-00			RES,FXD,FILM:22M OHM,5%,0.25W	80009	315-0226-00
A6R1446	315-0103-03			RES,FXD,CMPSN:10K OHM,5%,0.25W	80009	315-0103-03
A6R1453	315-0103-00			RES,FXD,FILM:10K OHM,5%,0.25W	19701	5043CX10K00J
A6R1454	311-1554-00			RES,VAR,NONWW:TRMR,200K OHM,0.5W	32997	3352T-1-204
A6R1455	315-0102-00			RES,FXD,FILM:1K OHM,5%,0.25W	57668	NTR25JE01K0
A6R1462	315-0124-00			RES,FXD,FILM:120K OHM,5%,0.25W	19701	5043CX120K0J
A6R1463	321-0365-00			RES,FXD,FILM:61.9K OHM,1%,0.125W,TC=T0	07716	CEAD61901F
A6R1464	311-1555-00			RES,VAR,NONWW:TRMR,100K OHM,0.5W	32997	3352T-1-104
A6R1465	321-0433-00			RES,FXD,FILM:316K OHM,1%,0.125W,TC=T0	07716	CEAD31602F
A6R1466	315-0103-00			RES,FXD,FILM:10K OHM,5%,0.25W	19701	5043CX10K00J
A6R1467	321-0414-00			RES,FXD,FILM:200K OHM,1%,0.125W,TC=T0	07716	CEAD20002F
A6R1472	315-0272-00			RES,FXD,FILM:2.7K OHM,5%,0.25W	57668	NTR25J-E02K7
A6R1473	315-0103-00			RES,FXD,FILM:10K OHM,5%,0.25W	19701	5043CX10K00J
A6R1474	315-0102-00			RES,FXD,FILM:1K OHM,5%,0.25W	57668	NTR25JE01K0
A6R1475	315-0683-00			RES,FXD,FILM:68K OHM,5%,0.25W	57668	NTR25J-E68K0
A6R1477	315-0122-00			RES,FXD,FILM:1.2K OHM,5%,0.25W	57668	NTR25J-E01K2
A6R1482	315-0104-00			RES,FXD,FILM:100K OHM,5%,0.25W	57668	NTR25J-E100K
A6R1483	315-0562-00			RES,FXD,FILM:5.6K OHM,5%,0.25W	57668	NTR25J-E05K6
A6R1486	315-0472-00			RES,FXD,FILM:4.7K OHM,5%,0.25W	57668	NTR25J-E04K7
A6R1492	315-0271-00			RES,FXD,FILM:270 OHM,5%,0.25W	57668	NTR25J-E270E
A6R1493	315-0223-00			RES,FXD,FILM:22K OHM,5%,0.25W	19701	5043CX22K00J92U
A6R1494	315-0103-00			RES,FXD,FILM:10K OHM,5%,0.25W	19701	5043CX10K00J
A6R1495	315-0102-00			RES,FXD,FILM:1K OHM,5%,0.25W	57668	NTR25JE01K0
A6R1496	321-0284-00			RES,FXD,FILM:8.87K OHM,1%,0.125W,TC=T0	19701	5043ED8K870F
A6R1497	321-0289-00			RES,FXD,FILM:10.0K OHM,1%,0.125W,TC=T0	19701	5033ED10K0F
A6R1498	321-0297-00			RES,FXD,FILM:12.1K OHM,1%,0.125W,TC=T0	07716	CEAD12101F
A6R1501	315-0104-00			RES,FXD,FILM:100K OHM,5%,0.25W	57668	NTR25J-E100K
A6R1502	315-0205-00			RES,FXD,FILM:2M OHM,5%,0.25W	01121	CB2055
A6R1504	315-0103-03			RES,FXD,CMPSN:10K OHM,5%,0.25W	80009	315-0103-03
A6R1505	315-0203-00			RES,FXD,FILM:20K OHM,5%,0.25W	57668	NTR25J-E 20K
A6R1507	315-0102-00			RES,FXD,FILM:1K OHM,5%,0.25W	57668	NTR25JE01K0
A6R1508	315-0103-03			RES,FXD,CMPSN:10K OHM,5%,0.25W	80009	315-0103-03
A6R1512	315-0102-00			RES,FXD,FILM:1K OHM,5%,0.25W	57668	NTR25JE01K0
A6R1514	307-0061-00			RES,FXD,CMPSN:7.5 OHM,5%,0.5W	01121	EB75G5
A6R1517	315-0754-00			RES,FXD,FILM:750K OHM,5%,0.25W,MI	19701	5043CX750K0J
A6R1518	315-0754-00			RES,FXD,FILM:750K OHM,5%,0.25W,MI	19701	5043CX750K0J
A6R1522	315-0103-03			RES,FXD,CMPSN:10K OHM,5%,0.25W	80009	315-0103-03
A6R1525	307-0431-01			RES,FXD,FILM:HI VOLT FOCUS&REG	80009	307-0431-01
A6R1526	311-1717-00			RES,VAR,NONWW:PNL,2.5M OHM,1W	12697	CM40403
A6R1527	311-1550-00			RES,VAR,NONWW:TRMR,2M OHM,0.5W	32997	3352T-1-205
A6R1529	311-1716-00			RES,VAR,NONWW:PNL,1.5M OHM,1W	16546	BA201-010
A6R1530	315-0225-00			RES,FXD,FILM:2.2M OHM,5%,0.25W	01121	CB2255
A6R1532	315-0625-00			RES,FXD,FILM:6.2M OHM,5%,0.25W	01121	CB6255

http://manoman.sqhill.com

Component No.	Tektronix Part No.	Serial/Assembly No. Effective	Dscont	Name & Description	Mfr. Code	Mfr. Part No.
A6R1533	315-0124-00			RES,FXD,FILM:120K OHM,5%,0.25W	19701	5043CX120K0J
A6R1542	315-0106-00			RES,FXD,FILM:10M OHM,5%,0.25W	01121	CB1065
A6R1543	315-0136-01			RES,FXD,CMPSN:13M OHM,5%,0.25W	01121	CB1365 A.BRADLEY
A6R1545	315-0395-00			RES,FXD,FILM:3.9M OHM,5%,0.25W	01121	CB3955
A6R1547	315-0206-01			RES,FXD,CMPSN:20M OHM,5%,0.25W	01121	CB2065 (AB ONLY)
A6R1552	315-0361-00			RES,FXD,FILM:360 OHM,5%,0.25W	19701	5043CX360R0J
A6R1553	311-1313-00			RES,VAR,NONWW:PNL,2K OHM,0.5W	01121	73M4G0481202M
A6R1554	311-1561-00			RES,VAR,NONWW:TRMR,2.5K OHM,0.5W	32997	3352T-DY7-252
A6R1556	311-1554-00			RES,VAR,NONWW:TRMR,200K OHM,0.5W	32997	3352T-1-204
A6R1562	301-0301-00			RES,FXD,FILM:300 OHM,5%,0.5W	19701	5053CX300R0J
A6R1563	311-1561-00			RES,VAR,NONWW:TRMR,2.5K OHM,0.5W	32997	3352T-DY7-252
A6R1564	311-1561-00			RES,VAR,NONWW:TRMR,2.5K OHM,0.5W	32997	3352T-DY7-252
A6R1572	315-0331-00			RES,FXD,FILM:330 OHM,5%,0.25W	57668	NTR25J-E330E
A6R1573	311-1552-00			RES,VAR,NONWW:TRMR,500K OHM,0.5W	32997	3352T-1-504
A6R1574	315-0683-00			RES,FXD,FILM:68K OHM,5%,0.25W	57668	NTR25J-E68K0
A6R1575	311-1372-00			RES,VAR,NONWW:PNL,100K OHM,0.5W	01121	73U1G040L104M
A6R1712	315-0272-00			RES,FXD,FILM:2.7K OHM,5%,0.25W	57668	NTR25J-E02K7
A6R1715	315-0392-00			RES,FXD,FILM:3.9K OHM,5%,0.25W	57668	NTR25J-E03K9
A6R1716	307-0116-00			RES,FXD,CMPSN:9.1 OHM,5%,0.25W	01121	CB 91G5
A6R1717	321-0172-00			RES,FXD,FILM:604 OHM,1%,0.125W,TC=T0	19701	5033ED604R0F
A6R1718	321-0369-00			RES,FXD,FILM:68.1K OHM,1%,0.125W,TC=T0	19701	5043ED68K10F
A6R1722	303-0333-00			RES,FXD,CMPSN:33K OHM,5%,1W	01121	GB3335
A6R1723	315-0153-00			RES,FXD,FILM:15K OHM,5%,0.25W	19701	5043CX15K0OJ
A6R1724	315-0102-00			RES,FXD,FILM:1K OHM,5%,0.25W	57668	NTR25JE01K0
A6R1725	321-0280-00			RES,FXD,FILM:8.06K OHM,1%,0.125W,TC=T0	19701	5033ED8K060F
A6R1726	323-0277-00			RES,FXD,FILM:7.50K OHM,1%,0.5W,TC=T0	75042	CECT0-7501F
A6R1727	303-0682-00			RES,FXD,CMPSN:6.8K OHM,5%,1W	01121	GB6825
A6R1732	315-0331-00			RES,FXD,FILM:330 OHM,5%,0.25W	57668	NTR25J-E330E
A6R1733	315-0243-00			RES,FXD,FILM:24K OHM,5%,0.25W	57668	NTR25J-E24K0
A6R1734	307-0052-00			RES,FXD,CMPSN:3 OHM,5%,0.5W	01121	EB30G5
A6R1735	321-0362-00			RES,FXD,FILM:57.6K OHM,1%,0.125W,TC=T0	19701	5043ED57K60F
A6R1736	311-1226-00			RES,VAR,NONWW:TRMR,2.5K OHM,0.5W	32997	3386F-T04-252
A6R1737	321-0284-00			RES,FXD,FILM:8.87K OHM,1%,0.125W,TC=T0	19701	5043ED8K870F
A6R1743	315-0103-00			RES,FXD,FILM:10K OHM,5%,0.25W	19701	5043CX10K0OJ
A6R1744	315-0103-00			RES,FXD,FILM:10K OHM,5%,0.25W	19701	5043CX10K0OJ
A6R1752	321-0756-03			RES,FXD,FILM:50K OHM,0.25%,0.125W	07716	CEAC 50001C
A6R1753	321-0603-00			RES,FXD,FILM:15K OHM,0.25%,0.125W,TC=T2	19701	5033RC15K00C
A6R1754	315-0122-00			RES,FXD,FILM:1.2K OHM,5%,0.25W	57668	NTR25J-E01K2
A6R1756	315-0163-00			RES,FXD,FILM:16K OHM,5%,0.25W	57668	NTR25J-E 16K
A6R1757	308-0245-00			RES,FXD,WW:0.6 OHM,5%,2W	00213	310S .6-5
A6R1762	321-0720-03			RES,FXD,FILM:60K OHM,0.125%,0.125W,TC=T2	07716	CEA 60 KOHM 0.25
A6R1763	321-0816-03			RES,FXD,FILM:5K OHM,0.25%,0.125W,TC=T2	19701	5033RC5K000C
A6R1765	315-0471-00			RES,FXD,FILM:470 OHM,5%,0.25W	57668	NTR25J-E470E
A6R1766	315-0472-00			RES,FXD,FILM:4.7K OHM,5%,0.25W	57668	NTR25J-E04K7
A6R1767	308-0245-00			RES,FXD,WW:0.6 OHM,5%,2W	00213	310S .6-5
A6R1772	321-0755-03			RES,FXD,FILM:65K OHM,0.25%,0.125W,TC=T2	19701	5033RC65K00C
A6R1773	321-0962-03			RES,FXD,FILM:8K OHM,0.25%,0.125W,TC=T2	19701	5033RC8K00C
A6R1774	321-0275-00			RES,FXD,FILM:7.15K OHM,1%,0.125W,TC=T0	07716	CEAD71500F
A6R1775	315-0152-00			RES,FXD,FILM:1.5K OHM,5%,0.25W	57668	NTR25J-E01K5
A6R1776	315-0163-00			RES,FXD,FILM:16K OHM,5%,0.25W	57668	NTR25J-E 16K
A6R1777	308-0245-00			RES,FXD,WW:0.6 OHM,5%,2W	00213	310S .6-5
A6R1778	315-0101-00			RES,FXD,FILM:100 OHM,5%,0.25W	57668	NTR25J-E 100E
A6R1781	321-0622-00			RES,FXD,FILM:37.96K OHM,0.25%,0.125W,TC=T2	01121	ORDER BY DESCR
A6R1782	315-0332-00			RES,FXD,FILM:3.3K OHM,5%,0.25W	57668	NTR25J-E03K3
A6R1783	321-1283-03			RES,FXD,FILM:8.76K OHM,0.25%,0.125W,TC=T2	24546	NC55C8761C
A6R1784	315-0332-00			RES,FXD,FILM:3.3K OHM,5%,0.25W	57668	NTR25J-E03K3
A6R1785	315-0682-00			RES,FXD,FILM:6.8K OHM,5%,0.25W	57668	NTR25J-E06K8
A6R1786	315-0301-00			RES,FXD,FILM:300 OHM,5%,0.25W	57668	NTR25J-E300E

http://manoman.sqhill.com

Component No.	Tektronix Part No.	Serial/Assembly No. Effective	Dscont	Name & Description	Mfr. Code	Mfr. Part No.
A6R1787	315-0163-00			RES,FXD,FILM:16K OHM,5%,0.25W	57668	NTR25J-E 16K
A6R1788	307-0052-00			RES,FXD,CMPSN:3 OHM,5%,0.5W	01121	EB30G5
A6R1792	315-0302-00			RES,FXD,FILM:3K OHM,5%,0.25W	57668	NTR25J-E03K0
A6R1794	311-1373-00			RES,VAR,NONWW:PNL,5K OHM,1W	32997	81C1D-E20-BA0344
A6R1802	315-0202-00			RES,FXD,FILM:2K OHM,5%,0.25W	57668	NTR25J-E 2K
A6R1803	315-0302-00			RES,FXD,FILM:3K OHM,5%,0.25W	57668	NTR25J-E03K0
A6R2078	315-0243-00			RES,FXD,FILM:24K OHM,5%,0.25W	57668	NTR25J-E24K0
A6R2079	315-0393-00			RES,FXD,FILM:39K OHM,5%,0.25W	57668	NTR25J-E39K0
A6R2099	308-0290-00			RES,FXD,WW:8 OHM,5%,5W	00213	1250SB-8-5
A6RT1243	307-0122-00			RES,THERMAL:50 HM,10%,NTC	14193	1B15-500K
A6RT1423	307-0181-00			RES,THERMAL:100K OHM,10%,NTC	14193	K10-10002K
A6S400	260-1421-00			SWITCH,PUSH:1 BTN,2 POLE,INSTRUMENT ID	59821	ORDER BY DESCR
A6S1239	260-1208-00			SWITCH,PUSH:DPDT,28VDC,PUSH-PUSH	31918	ORDER BY DESCR
A6S1403	----- -----			(FURN AS A SET W/R1403)		
A6S1501	260-1726-00			SWITCH,REED:SPST,3A,3.5KV	12617	DRVT-5
A6T1501	120-0909-01			XFMR,PWR,SDN&SU:HIGH VOLTAGE	80009	120-0909-01
A6TP1367	214-0579-00			TERM,TEST POINT:BRS CD PL	80009	214-0579-00
A6TP1372	214-0579-00			TERM,TEST POINT:BRS CD PL	80009	214-0579-00
A6TP1443	214-0579-00			TERM,TEST POINT:BRS CD PL	80009	214-0579-00
A6TP1498	214-0579-00			TERM,TEST POINT:BRS CD PL	80009	214-0579-00
A6TP1501	214-0579-00			TERM,TEST POINT:BRS CD PL	80009	214-0579-00
A6U1724	156-0158-04			MICROCKT,LINEAR:DUAL OPNL AMPL	01295	MC1458JG
A6U1762	156-0158-04			MICROCKT,LINEAR:DUAL OPNL AMPL	01295	MC1458JG
A6VR1282	152-0168-00			SEMICOND DVC,DI:ZEN,SI,12V,5%,0.4W,DO-763B	14552	TD331689
A6VR1289	152-0166-00			SEMICOND DVC,DI:ZEN,SI,6.2V,5%,0.4W,DO-7	04713	SZ11738RL
A6VR1527	152-0149-00			SEMICOND DVC,DI:ZEN,SI,10V,5%,0.4W,DO-7	15238	Z5406
A6VR1532	152-0283-00			SEMICOND DVC,DI:ZEN,SI,43V,5%,0.4W,D-07	04713	SZ14257KRL
A6VR1533	152-0427-00			SEMICOND DVC,DI:ZEN,SI,100V,5%,0.4W,DO-7	12954	DZ760611F
A6VR1712	152-0304-00			SEMICOND DVC,DI:ZEN,SI,20V,5%,0.4W,DO-7	15238	Z5411
A6VR1718	152-0580-00			SEMICOND DVC,DI:ZEN,SI,75V,2%,0.4W,DO-7	04713	SZ14358RL
A6VR1722	152-0304-00			SEMICOND DVC,DI:ZEN,SI,20V,5%,0.4W,DO-7	15238	Z5411
A6VR1724	152-0268-00			SEMICOND DVC,DI:ZEN,SI,56V,5%,0.4W,DO-7	04713	SZG35009K91N979B
A6VR1725	152-0281-00			SEMICOND DVC,DI:ZEN,SI,22V,5%,0.4W,DO-7	12954	1N969B/DO-35
A6VR1726	152-0411-00			SEMICOND DVC,DI:ZEN,SI,9V,5%,500MW,DO-7	55801	DT-1073
A6VR1772	152-0279-00			SEMICOND DVC,DI:ZEN,SI,5.1V,5%,0.4W,DO-7	14552	TD3810989
A6VR1794	152-0127-00			SEMICOND DVC,DI:ZEN,SI,7.5V,5%,0.4W,DO-7	14433	Z5347 (1N958B)
A6W1239	131-0566-00			BUS,CONDUCTOR:DUMMY RES,0.094 OD X 0.225 L	24546	OMA 07
A6W1514	131-0566-00			BUS,CONDUCTOR:DUMMY RES,0.094 OD X 0.225 L	24546	OMA 07
A6W1572	131-0566-00			BUS,CONDUCTOR:DUMMY RES,0.094 OD X 0.225 L	24546	OMA 07

http://manoman.sqhill.com

Component No.	Tektronix Part No.	Serial/Assembly No. Effective	Dscont	Name & Description	Mfr. Code	Mfr. Part No.
A7	672-0460-02			CIRCUIT BD ASSY:TIME/DIV	80009	672-0460-02
A7C1112	283-0080-00			CAP,FXD,CER DI:0.022UF,+80-20%,25V	59821	2DDU60E223Z
A7C1115	290-0519-00			CAP,FXD,ELCTLT:100UF,20%,20V	90201	TDC107M020WLD
A7C1131	295-0175-00			CAP SET,MATCHED:9.95UF,0.1UF,985PF,0.2% (FURN AS AS SET W/C1133,C1135)	80009	295-0175-00
A7C1132	281-0523-00			CAP,FXD,CER DI:100PF,20%,350V	52763	2RDPLZ007 100PMU
A7C1133	----- -----			(FURN AS A SET W/C1131,C1135)		
A7C1135	----- -----			(FURN AS A SET W/C1131,C1133)		
A7C1136	281-0096-00			CAP,VAR,AIR DI:5.5-18PF,350V	52763	302324237
A7C1137	281-0089-00			CAP,VAR,CER DI:2-8PF,350V	51406	DV11-PR8A
A7C1138	283-0331-00			CAP,FXD,CER DI:43PF,2%,100V	59660	0805536C0G0430G
A7C1144	283-0003-00			CAP,FXD,CER DI:0.01UF,+80-20%,150V	59821	D103Z40Z5UJDCEX
A7C1151	283-0268-00			CAP,FXD,CER DI:0.015UF,20%,50V	04222	3439-050C-153K
A7C1152	290-0245-00			CAP,FXD,ELCTLT:1.5UF,10%,10V	31433	T110A155K010AS
A7C1153	283-0645-00			CAP,FXD,MICA DI:790PF,1%,100V	00853	D153F791F0
A7C1161	295-0157-00			CAP SET,MATCHED:1UF,0.1UF,998PF,MATCHED (FURN AS A SET W/C1163,C1165)	80009	295-0157-00
A7C1162	281-0523-00			CAP,FXD,CER DI:100PF,20%,350V	52763	2RDPLZ007 100PMU
A7C1163	----- -----			(FURN AS A SET W/C1161,C1165)		
A7C1165	----- -----			(FURN AS A SET W/C1161,C1163)		
A7C1167	281-0089-00			CAP,VAR,CER DI:2-8PF,350V	51406	DV11-PR8A
A7C1168	283-0331-00			CAP,FXD,CER DI:43PF,2%,100V	59660	0805536C0G0430G
A7CR989	152-0141-02			SEMICOND DVC,DI:SW,SI,30V,150MA,30V,DO-35	03508	DA2527 (1N4152)
A7CR1153	152-0141-02			SEMICOND DVC,DI:SW,SI,30V,150MA,30V,DO-35	03508	DA2527 (1N4152)
A7J1110	131-0608-00			TERMINAL,PIN:0.365 L X 0.025 BRZ GLD PL	22526	48283-036
A7J1120	131-0608-00			TERMINAL,PIN:0.365 L X 0.025 BRZ GLD PL	22526	48283-036
A7J1130	131-0608-00			TERMINAL,PIN:0.365 L X 0.025 BRZ GLD PL	22526	48283-036
A7Q1140	151-0302-00			TRANSISTOR:NPN,SI,TO-18	04713	ST899
A7Q1170	151-0302-00			TRANSISTOR:NPN,SI,TO-18	04713	ST899
A7R989	315-0682-00			RES,FXD,FILM:6.8K OHM,5%,0.25W	57668	NTR25J-E06K8
A7R1112	321-0125-00			RES,FXD,FILM:196 OHM,1%,0.125W, TC=T0	07716	CEAD196R0F
A7R1113	321-0068-00			RES,FXD,FILM:49.9 OHM,0.5%,0.125W,TC=T0	91637	CMF55116G49R90F
A7R1114	321-0231-00			RES,FXD,FILM:2.49K OHM,1%,0.125W,TC=T0	19701	5033ED2K49F
A7R1115	311-1244-00			RES,VAR,NONWW:TRMR,100 OHM,0.5W	32997	3386X-T07-101
A7R1117	321-0169-00			RES,FXD,FILM:562 OHM,1%,0.125W,TC=T0	07716	CEAD562R0F
A7R1131	323-0498-04			RES,FXD,FILM:1.5MEG OHM,0.1%,0.5W,TC=T2	07716	CECC15003B
A7R1132	315-0101-00			RES,FXD,FILM:100 OHM,5%,0.25W	57668	NTR25J-E 100E
A7R1133	323-0481-04			RES,FXD,FILM:1 MEG OHM,0.1%,0.5W,TC=T2	07716	CECC10003B
A7R1134	321-0648-04			RES,FXD,FILM:500K OHM,0.1%,0.125W,TC=T2 MI	19701	5033RC500K0B
A7R1135	321-0618-04			RES,FXD,FILM:250K OHM,0.1%,0.125W,TC=T2	19701	5033RC250K0B
A7R1136	321-0414-04			RES,FXD,FILM:200K OHM,0.1%,0.125W,TC=T2	19701	5033RC200K0B
A7R1137	321-0385-04			RES,FXD,FILM:100S OHM,0.1%,0.125W,TC=T2	07716	CEAC10002B
A7R1138	321-0756-04			RES,FXD,FILM:50K OHM,0.1%,0.125W,TC=T2	07716	CEAC50001B
A7R1140	311-1701-00			RES,VAR,NONWW:PNL,50K OHM,0.25W,W/SW	01121	18M655
A7R1142	----- -----			(SEE DM SERIES MANUAL)		
A7R1143	----- -----			(SEE DM SERIES MANUAL)		
A7R1144	321-0212-00			RES,FXD,FILM:1.58K OHM,1%,0.125W,TC=70	19701	5033ED1K58F
A7R1145	311-1245-00			RES,VAR,NONWW:TRMR,10K OHM,0.5W	32997	3386X-DY6-103
A7R1146	315-0472-00			RES,FXD,FILM:4.7K OHM,5%,0.25W	57668	NTR25J-E04K7
A7R1147	----- -----			(SEE DM SERIES MANUAL)		
A7R1151	321-0436-00			RES,FXD,FILM:340K OHM,1%,0.125W,TC=T0	19701	5043ED340K0F
A7R1153	321-0345-00			RES,FXD,FILM:38.3K OHM,1%,0.125W,TC=T0	19701	5043ED38K30F
A7R1161	323-0498-04			RES,FXD,FILM:1.5MEG OHM,0.1%,0.5W,TC=T2	07716	CECC15003B
A7R1162	315-0101-00			RES,FXD,FILM:100 OHM,5%,0.25W	57668	NTR25J-E 100E
A7R1163	323-0481-04			RES,FXD,FILM:1 MEG OHM,0.1%,0.5W,TC=T2	07716	CECC10003B
A7R1164	321-0648-04			RES,FXD,FILM:500K OHM,0.1%,0.125W,TC=T2 MI	19701	5033RC500K0B
A7R1165	321-0618-04			RES,FXD,FILM:250K OHM,0.1%,0.125W,TC=T2	19701	5033RC250K0B
A7R1166	321-0414-04			RES,FXD,FILM:200K OHM,0.1%,0.125W,TC=T2	19701	5033RC200K0B

http://manoman.sqhill.com

Component No.	Tektronix Part No.	Serial/Assembly No. Effective	Dscont	Name & Description	Mfr. Code	Mfr. Part No.
A7R1167	321-0385-04			RES,FXD,FILM:1005 OHM,0.1%,0.125W,TC=T2	07716	CEAC10002B
A7R1168	321-0756-04			RES,FXD,FILM:50K OHM,0.1%,0.125W,TC=T2	07716	CEAC50001B
A7R1170	315-0473-00			RES,FXD,FILM:47K OHM,5%,0.25W	57668	NTR25J-E47K0
A7R1175	311-1245-00			RES,VAR,NONWW:TRMR,10K OHM,0.5W	32997	3386X-DY6-103
A7S1100	260-1422-00			SWITCH,PUSH:3 BTN,2 POLE,TRIGGER MODE	31918	ORDER BY DESCR
A7S1120	260-1423-00			SWITCH,PUSH:4 BTN,2 POLE,HORIZ MODE	31918	ORDER BY DESCR
A7S1140	----- -----			(PART OF R1140)		
A7S1150	263-1092-01			SW CAM ACTR AS:TIME/CM	80009	263-1092-01
A7VR1145	152-0395-00			SEMICOND DVC,DI:ZEN,SI,4.3V,5%,0.4W	04713	SZG35009K18
A7VR1146	152-0166-00			SEMICOND DVC,DI:ZEN,SI,6.2V,5%,0.4W,DO-7	04713	SZ11738RL

http://manoman.sqhill.com

Component No.	Tektronix Part No.	Serial/Assembly No. Effective	Dscont	Name & Description	Mfr. Code	Mfr. Part No.
A8	670-2754-01			CIRCUIT BD ASSY:HIGH VOLTAGE MULTIPLIER	80009	670-2754-01
A8C1582	283-0368-00			CAP,FXD,CER DI:1000PF,20%,12000V	51406	DHR18Y5F102M12KV
A8C1583	283-0368-00			CAP,FXD,CER DI:1000PF,20%,12000V	51406	DHR18Y5F102M12KV
A8C1585	283-0368-00			CAP,FXD,CER DI:1000PF,20%,12000V	51406	DHR18Y5F102M12KV
A8CR1582	152-0409-00			SEMICOND DVC,DI:RECT,SI,12KV,35MA,2NS	83003	VG12X-1
A8CR1583	152-0409-00			SEMICOND DVC,DI:RECT,SI,12KV,35MA,2NS	83003	VG12X-1
A8R1583	301-0305-00			RES,FXD,FILM:3M OHM,5%,0.5W	57668	TR50J 3 M OHM
A8R1584	301-0305-00			RES,FXD,FILM:3M OHM,5%,0.5W	57668	TR50J 3 M OHM
A8R1585	301-0305-00			RES,FXD,FILM:3M OHM,5%,0.5W	57668	TR50J 3 M OHM
A8R1586	301-0305-00			RES,FXD,FILM:3M OHM,5%,0.5W	57668	TR50J 3 M OHM
A8R1587	301-0305-00			RES,FXD,FILM:3M OHM,5%,0.5W	57668	TR50J 3 M OHM

http://manoman.sqhill.com

Component No.	Tektronix Part No.	Serial/Assembly No. Effective	Dscont	Name & Description	Mfr. Code	Mfr. Part No.
A9	670-2279-01			CIRCUIT BD ASSY:CRT SCALE ILLUMINATION	80009	670-2279-01
A9DS1792	150-0129-00			LAMP,INCAND:6.3V,0.2A,#2112,WIRE LEADS	08806	2112 D
A9DS1794	150-0129-00			LAMP,INCAND:6.3V,0.2A,#2112,WIRE LEADS	08806	2112 D

http://manoman.sqhill.com

Component No.	Tektronix Part No.	Serial/Assembly No. Effective	Dscont	Name & Description	Mfr. Code	Mfr. Part No.
A10	670-2808-00	B200000	B200445	CIRCUIT BD ASSY:STORAGE & LOGIC	80009	670-2808-00
A10	670-2808-01	B200446		CIRCUIT BD ASSY:STORAGE/LOGIC	80009	670-2808-01
A10C1812	283-0150-00			CAP,FXD,CER DI:650PF,5%,200V	59821	2DDH60K651J
A10C1826	290-0535-00			CAP,FXD,ELCTLT:33UF,20%,10V TANTALUM	56289	196D336X0010KA1
A10C1831	290-0114-00			CAP,FXD,ELCTLT:47UF,20%,6V	05397	T110B476M006AS
A10C1834	290-0524-00			CAP,FXD,ELCTLT:4.7UF,20%,10V	05397	T368A475M010AZ
A10C1835	290-0534-00			CAP,FXD,ELCTLT:1UF,20%,35V	05397	T368A105M035AZ
A10C1842	283-0198-00			CAP,FXD,CER DI:0.22UF,20%,50V	05397	C330C224M5U1CA
A10C1845	283-0087-00	B200000	B200445	CAP,FXD,CER DI:300PF,10%,1000V	59660	0838020X5F00301K
A10C1845	281-0788-00	B200446		CAP,FXD,CER DI:470PF,10%,100V	04222	MA101C471KAA
A10C1846	290-0527-00			CAP,FXD,ELCTLT:15UF,20%,20V	05397	T368B156M020AS
A10C1847	290-0527-00			CAP,FXD,ELCTLT:15UF,20%,20V	05397	T368B156M020AS
A10C1848	283-0150-00			CAP,FXD,CER DI:650PF,5%,200V	59821	2DDH60K651J
A10C1855	283-0220-00			CAP,FXD,CER DI:0.01UF,20%,50V	04222	3429 050C 103M
A10C1862	290-0246-00			CAP,FXD,ELCTLT:3.3UF,10%,15V	12954	D3R3EA15K1
A10C1869	290-0531-00			CAP,FXD,ELCTLT:100UF,20%,10V	05397	T368C107M010AS
A10C1933	281-0523-00	B200000	B200154	CAP,FXD,CER DI:100PF,20%,350V	52763	2RDPLZ007 100PMU
A10C1933	281-0814-00	B200155		CAP,FXD,CER DI:100 PF,10%,100V	04222	MA101A101KAA
A10C1942	283-0003-00			CAP,FXD,CER DI:0.01UF,+80-20%,150V	59821	D103Z40Z5UJDCEX
A10C1945	283-0081-00			CAP,FXD,CER DI:0.1UF,+80-20%,25V	59821	2DDU69E104Z
A10C1947	283-0003-00			CAP,FXD,CER DI:0.01UF,+80-20%,150V	59821	D103Z40Z5UJDCEX
A10C1962	281-0637-00			CAP,FXD,CER DI:91PF,5%,500V	52763	2RDPLZ007 91POJU
A10C1964	281-0637-00			CAP,FXD,CER DI:91PF,5%,500V	52763	2RDPLZ007 91POJU
A10C1967	290-0164-00			CAP,FXD,ELCTLT:1UF,+50-10%,150V	56289	500D105F150BA2R2
A10C1968	283-0013-00			CAP,FXD,CER DI:0.01UF,-0+100%,1000V	59660	818-602ZSU0103P
A10C1991	----- -----			(PART OF CIRCUIT BOARD)		
A10C1992	283-0003-00			CAP,FXD,CER DI:0.01UF,+80-20%,150V	59821	D103Z40Z5UJDCEX
A10C1995	290-0534-00			CAP,FXD,ELCTLT:1UF,20%,35V	05397	T368A105M035AZ
A10C1996	283-0067-00			CAP,FXD,CER DI:0.001UF,10%,200V	59660	835-515-YSE0102K
A10C1998	283-0092-00			CAP,FXD,CER DI:0.03UF,+80-20%,200V	59660	845-534Z5U0303Z
A10C2023	283-0067-00			CAP,FXD,CER DI:0.001UF,10%,200V	59660	835-515-YSE0102K
A10C2025	283-0150-00			CAP,FXD,CER DI:650PF,5%,200V	59821	2DDH60K651J
A10C2074	283-0003-00			CAP,FXD,CER DI:0.01UF,+80-20%,150V	59821	D103Z40Z5UJDCEX
A10C2077	283-0004-00			CAP,FXD,CER DI:0.02UF,+80-20%,150V	59660	855-558Z5V0203Z
A10C2094	290-0526-00			CAP,FXD,ELCTLT:6.8UF,20%,6.0/6.3VDC	05397	T368A685M006AS
A10C2095	290-0517-00			CAP,FXD,ELCTLT:6.8UF,20%,35V	05397	T368B685M035AZ
A10C2096	290-0535-00			CAP,FXD,ELCTLT:33UF,20%,10V TANTALUM	56289	196D336X0010KA1
A10C2097	290-0517-00			CAP,FXD,ELCTLT:6.8UF,20%,35V	05397	T368B685M035AZ
A10CR1814	152-0141-02			SEMICOND DVC,DI:SW,SI,30V,150MA,30V,DO-35	03508	DA2527 (1N4152)
A10CR1815	152-0141-02			SEMICOND DVC,DI:SW,SI,30V,150MA,30V,DO-35	03508	DA2527 (1N4152)
A10CR1822	152-0141-02			SEMICOND DVC,DI:SW,SI,30V,150MA,30V,DO-35	03508	DA2527 (1N4152)
A10CR1825	152-0141-02			SEMICOND DVC,DI:SW,SI,30V,150MA,30V,DO-35	03508	DA2527 (1N4152)
A10CR1835	152-0061-00			SEMICOND DVC,DI:SW,SI,175V,0.1A,DO-35	07263	FDH2161
A10CR1845	152-0061-00			SEMICOND DVC,DI:SW,SI,175V,0.1A,DO-35	07263	FDH2161
A10CR1848	152-0061-00			SEMICOND DVC,DI:SW,SI,175V,0.1A,DO-35	07263	FDH2161
A10CR1866	152-0141-02			SEMICOND DVC,DI:SW,SI,30V,150MA,30V,DO-35	03508	DA2527 (1N4152)
A10CR1869	152-0141-02			SEMICOND DVC,DI:SW,SI,30V,150MA,30V,DO-35	03508	DA2527 (1N4152)
A10CR1875	152-0141-02			SEMICOND DVC,DI:SW,SI,30V,150MA,30V,DO-35	03508	DA2527 (1N4152)
A10CR1876	152-0141-02			SEMICOND DVC,DI:SW,SI,30V,150MA,30V,DO-35	03508	DA2527 (1N4152)
A10CR1877	152-0141-02			SEMICOND DVC,DI:SW,SI,30V,150MA,30V,DO-35	03508	DA2527 (1N4152)
A10CR1923	152-0141-02			SEMICOND DVC,DI:SW,SI,30V,150MA,30V,DO-35	03508	DA2527 (1N4152)
A10CR1924	152-0141-02			SEMICOND DVC,DI:SW,SI,30V,150MA,30V,DO-35	03508	DA2527 (1N4152)
A10CR1925	152-0141-02			SEMICOND DVC,DI:SW,SI,30V,150MA,30V,DO-35	03508	DA2527 (1N4152)
A10CR1926	152-0141-02			SEMICOND DVC,DI:SW,SI,30V,150MA,30V,DO-35	03508	DA2527 (1N4152)
A10CR1927	152-0141-02			SEMICOND DVC,DI:SW,SI,30V,150MA,30V,DO-35	03508	DA2527 (1N4152)
A10CR1928	152-0141-02			SEMICOND DVC,DI:SW,SI,30V,150MA,30V,DO-35	03508	DA2527 (1N4152)
A10CR1932	152-0141-02			SEMICOND DVC,DI:SW,SI,30V,150MA,30V,DO-35	03508	DA2527 (1N4152)
A10CR1933	152-0141-02			SEMICOND DVC,DI:SW,SI,30V,150MA,30V,DO-35	03508	DA2527 (1N4152)

http://manoman.sqhill.com

Component No.	Tektronix Part No.	Serial/Assembly No. Effective	Dscont	Name & Description	Mfr. Code	Mfr. Part No.
A10CR1934	152-0141-02			SEMICOND DVC,DI:SW,SI,30V,150MA,30V,DO-35	03508	DA2527 (1N4152)
A10CR1935	152-0141-02			SEMICOND DVC,DI:SW,SI,30V,150MA,30V,DO-35	03508	DA2527 (1N4152)
A10CR1936	152-0141-02			SEMICOND DVC,DI:SW,SI,30V,150MA,30V,DO-35	03508	DA2527 (1N4152)
A10CR1937	152-0141-02			SEMICOND DVC,DI:SW,SI,30V,150MA,30V,DO-35	03508	DA2527 (1N4152)
A10CR1938	152-0141-02			SEMICOND DVC,DI:SW,SI,30V,150MA,30V,DO-35	03508	DA2527 (1N4152)
A10CR1941	152-0331-00			SEMICOND DVC,DI:RECT,SI,1,500 25MA	TK0191	152-0331-00
A10CR1947	152-0141-02			SEMICOND DVC,DI:SW,SI,30V,150MA,30V,DO-35	03508	DA2527 (1N4152)
A10CR1962	152-0141-02			SEMICOND DVC,DI:SW,SI,30V,150MA,30V,DO-35	03508	DA2527 (1N4152)
A10CR1963	152-0040-00			SEMICOND DVC,DI:RECT,SI,600V,1A,DO-41	80009	152-0040-00
A10CR1965	152-0040-00			SEMICOND DVC,DI:RECT,SI,600V,1A,DO-41	80009	152-0040-00
A10CR1966	152-0061-00			SEMICOND DVC,DI:SW,SI,175V,0.1A,DO-35	07263	FDH2161
A10CR1981	152-0141-02			SEMICOND DVC,DI:SW,SI,30V,150MA,30V,DO-35	03508	DA2527 (1N4152)
A10CR1982	152-0141-02			SEMICOND DVC,DI:SW,SI,30V,150MA,30V,DO-35	03508	DA2527 (1N4152)
A10CR1983	152-0141-02			SEMICOND DVC,DI:SW,SI,30V,150MA,30V,DO-35	03508	DA2527 (1N4152)
A10CR1984	152-0141-02			SEMICOND DVC,DI:SW,SI,30V,150MA,30V,DO-35	03508	DA2527 (1N4152)
A10CR1985	152-0141-02			SEMICOND DVC,DI:SW,SI,30V,150MA,30V,DO-35	03508	DA2527 (1N4152)
A10CR1986	152-0141-02			SEMICOND DVC,DI:SW,SI,30V,150MA,30V,DO-35	03508	DA2527 (1N4152)
A10CR1987	152-0141-02			SEMICOND DVC,DI:SW,SI,30V,150MA,30V,DO-35	03508	DA2527 (1N4152)
A10CR1988	152-0141-02			SEMICOND DVC,DI:SW,SI,30V,150MA,30V,DO-35	03508	DA2527 (1N4152)
A10CR1996	152-0141-02			SEMICOND DVC,DI:SW,SI,30V,150MA,30V,DO-35	03508	DA2527 (1N4152)
A10CR2012	152-0141-02			SEMICOND DVC,DI:SW,SI,30V,150MA,30V,DO-35	03508	DA2527 (1N4152)
A10CR2013	152-0141-02			SEMICOND DVC,DI:SW,SI,30V,150MA,30V,DO-35	03508	DA2527 (1N4152)
A10CR2014	152-0141-02			SEMICOND DVC,DI:SW,SI,30V,150MA,30V,DO-35	03508	DA2527 (1N4152)
A10CR2015	152-0141-02			SEMICOND DVC,DI:SW,SI,30V,150MA,30V,DO-35	03508	DA2527 (1N4152)
A10CR2016	152-0141-02			SEMICOND DVC,DI:SW,SI,30V,150MA,30V,DO-35	03508	DA2527 (1N4152)
A10CR2026	152-0141-02			SEMICOND DVC,DI:SW,SI,30V,150MA,30V,DO-35	03508	DA2527 (1N4152)
A10CR2032	152-0141-02			SEMICOND DVC,DI:SW,SI,30V,150MA,30V,DO-35	03508	DA2527 (1N4152)
A10CR2033	152-0141-02			SEMICOND DVC,DI:SW,SI,30V,150MA,30V,DO-35	03508	DA2527 (1N4152)
A10CR2034	152-0141-02			SEMICOND DVC,DI:SW,SI,30V,150MA,30V,DO-35	03508	DA2527 (1N4152)
A10CR2035	152-0141-02			SEMICOND DVC,DI:SW,SI,30V,150MA,30V,DO-35	03508	DA2527 (1N4152)
A10CR2036	152-0141-02			SEMICOND DVC,DI:SW,SI,30V,150MA,30V,DO-35	03508	DA2527 (1N4152)
A10CR2042	152-0141-02			SEMICOND DVC,DI:SW,SI,30V,150MA,30V,DO-35	03508	DA2527 (1N4152)
A10CR2043	152-0141-02			SEMICOND DVC,DI:SW,SI,30V,150MA,30V,DO-35	03508	DA2527 (1N4152)
A10CR2044	152-0141-02			SEMICOND DVC,DI:SW,SI,30V,150MA,30V,DO-35	03508	DA2527 (1N4152)
A10CR2045	152-0141-02			SEMICOND DVC,DI:SW,SI,30V,150MA,30V,DO-35	03508	DA2527 (1N4152)
A10CR2052	152-0141-02			SEMICOND DVC,DI:SW,SI,30V,150MA,30V,DO-35	03508	DA2527 (1N4152)
A10CR2053	152-0141-02			SEMICOND DVC,DI:SW,SI,30V,150MA,30V,DO-35	03508	DA2527 (1N4152)
A10CR2054	152-0141-02			SEMICOND DVC,DI:SW,SI,30V,150MA,30V,DO-35	03508	DA2527 (1N4152)
A10CR2055	152-0141-02			SEMICOND DVC,DI:SW,SI,30V,150MA,30V,DO-35	03508	DA2527 (1N4152)
A10L2095	108-0538-00			COIL,RF:FIXED,2.7UH	76493	JWM#B7059
A10L2096	108-0538-00			COIL,RF:FIXED,2.7UH	76493	JWM#B7059
A10L2097	108-0538-00			COIL,RF:FIXED,2.7UH	76493	JWM#B7059
A10Q1812	151-0188-00			TRANSISTOR:PNP,SI,TO-92	80009	151-0188-00
A10Q1816	151-0188-00			TRANSISTOR:PNP,SI,TO-92	80009	151-0188-00
A10Q1822	151-0190-00			TRANSISTOR:NPN,SI,TO-92	80009	151-0190-00
A10Q1832	151-0188-00			TRANSISTOR:PNP,SI,TO-92	80009	151-0188-00
A10Q1834	151-0190-00			TRANSISTOR:NPN,SI,TO-92	80009	151-0190-00
A10Q1836	151-0508-00			TRANSISTOR:UJT,SI,TO-98	03508	X13T520
A10Q1838	151-0508-00			TRANSISTOR:UJT,SI,TO-98	03508	X13T520
A10Q1842	151-0508-00			TRANSISTOR:UJT,SI,TO-98	03508	X13T520
A10Q1852	151-0508-00			TRANSISTOR:UJT,SI,TO-98	03508	X13T520
A10Q1864	151-0508-00			TRANSISTOR:UJT,SI,TO-98	03508	X13T520
A10Q1872	151-0190-00			TRANSISTOR:NPN,SI,TO-92	80009	151-0190-00
A10Q1938	151-0410-00			TRANSISTOR:PNP,SI,TO-92	04713	SPS6765
A10Q1942	151-0410-00			TRANSISTOR:PNP,SI,TO-92	04713	SPS6765
A10Q1944	151-0292-00			TRANSISTOR:NPN,SI,X-55	80009	151-0292-00
A10Q1948	151-0292-00			TRANSISTOR:NPN,SI,X-55	80009	151-0292-00
A10Q1952	151-0188-00			TRANSISTOR:PNP,SI,TO-92	80009	151-0188-00

http://manoman.sqhill.com

Component No.	Tektronix Part No.	Serial/Assembly No. Effective	Dscont	Name & Description	Mfr. Code	Mfr. Part No.
A10Q1956	151-0292-00			TRANSISTOR:NPN,SI,X-55	80009	151-0292-00
A10Q1962	151-0444-00			TRANSISTOR:NPN,SI,TO-92	04713	SPS797
A10Q1964	151-0444-00			TRANSISTOR:NPN,SI,TO-92	04713	SPS797
A10Q1966	151-0444-00			TRANSISTOR:NPN,SI,TO-92	04713	SPS797
A10Q1968	151-0444-00			TRANSISTOR:NPN,SI,TO-92	04713	SPS797
A10Q1992	151-0410-00			TRANSISTOR:PNP,SI,TO-92	04713	SPS6765
A10Q1994	151-0410-00			TRANSISTOR:PNP,SI,TO-92	04713	SPS6765
A10Q1996	151-0292-00			TRANSISTOR:NPN,SI,X-55	80009	151-0292-00
A10Q1998	151-0292-00			TRANSISTOR:NPN,SI,X-55	80009	151-0292-00
A10Q2022	151-0410-00			TRANSISTOR:PNP,SI,TO-92	04713	SPS6765
A10Q2024	151-0292-00			TRANSISTOR:NPN,SI,X-55	80009	151-0292-00
A10Q2026	151-0292-00			TRANSISTOR:NPN,SI,X-55	80009	151-0292-00
A10Q2032	151-0410-00			TRANSISTOR:PNP,SI,TO-92	04713	SPS6765
A10Q2036	151-0347-00			TRANSISTOR:NPN,SI,TO-92	04713	SPS7951
A10Q2042	151-0410-00			TRANSISTOR:PNP,SI,TO-92	04713	SPS6765
A10Q2046	151-0347-00			TRANSISTOR:NPN,SI,TO-92	04713	SPS7951
A10Q2054	151-0410-00			TRANSISTOR:PNP,SI,TO-92	04713	SPS6765
A10Q2056	151-0347-00			TRANSISTOR:NPN,SI,TO-92	04713	SPS7951
A10Q2072	151-0190-00			TRANSISTOR:NPN,SI,TO-92	80009	151-0190-00
A10Q2074	151-0410-00			TRANSISTOR:PNP,SI,TO-92	04713	SPS6765
A10Q2078	151-0347-00			TRANSISTOR:NPN,SI,TO-92	04713	SPS7951
A10Q2092	151-0190-00			TRANSISTOR:NPN,SI,TO-92	80009	151-0190-00
A10Q2094	151-0188-00			TRANSISTOR:PNP,SI,TO-92	80009	151-0188-00
A10R1224	315-0512-00			RES,FXD,FILM:5.1K OHM,5%,0.25W	57668	NTR25J-E05K1
A10R1226	315-0823-00			RES,FXD,FILM:82K OHM,5%,0.25W	57668	NTR25J-E82K
A10R1227	311-1670-00			RES,VAR,NONWW:PNL,10K X 100K OHM,0.5W	01121	18M408
A10R1812	315-0104-00			RES,FXD,FILM:100K OHM,5%,0.25W	57668	NTR25J-E100K
A10R1813	315-0204-00			RES,FXD,FILM:200K OHM,5%,0.25W	19701	5043CX200K0J
A10R1814	315-0334-00			RES,FXD,FILM:330K OHM,5%,0.25W	57668	NTR25J-E 330K
A10R1815	311-1864-00			RES,VAR,NONWW:PNL,10K OHM,1.0W,2PST (FURN AS A SET W/S1815)	01121	23M954
A10R1816	315-0152-00			RES,FXD,FILM:1.5K OHM,5%,0.25W	57668	NTR25J-E01K5
A10R1817	315-0124-00			RES,FXD,FILM:120K OHM,5%,0.25W	19701	5043CX120K0J
A10R1818	315-0203-00			RES,FXD,FILM:20K OHM,5%,0.25W	57668	NTR25J-E 20K
A10R1823	315-0103-00			RES,FXD,FILM:10K OHM,5%,0.25W	19701	5043CX10K00J
A10R1824	315-0103-00			RES,FXD,FILM:10K OHM,5%,0.25W	19701	5043CX10K00J
A10R1825	315-0161-00			RES,FXD,FILM:160 OHM,5%,0.25W	57668	NTR25J-E 160E
A10R1826	315-0150-00			RES,FXD,FILM:15 OHM,5%,0.25W	19701	5043CX15R00J
A10R1827	315-0132-00			RES,FXD,FILM:1.3K OHM,5%,0.25W	57668	NTR25J-E01K3
A10R1831	315-0822-00			RES,FXD,FILM:8.2K OHM,5%,0.25W	19701	5043CX8K200J
A10R1832	315-0153-00			RES,FXD,FILM:15K OHM,5%,0.25W	19701	5043CX15K00J
A10R1833	315-0221-00			RES,FXD,FILM:220 OHM,5%,0.25W	57668	NTR25J-E220E
A10R1834	315-0222-00			RES,FXD,FILM:2.2K OHM,5%,0.25W	57668	NTR25J-E02K2
A10R1835	315-0222-00			RES,FXD,FILM:2.2K OHM,5%,0.25W	57668	NTR25J-E02K2
A10R1836	315-0822-00			RES,FXD,FILM:8.2K OHM,5%,0.25W	19701	5043CX8K200J
A10R1837	315-0153-00			RES,FXD,FILM:15K OHM,5%,0.25W	19701	5043CX15K00J
A10R1838	315-0221-00			RES,FXD,FILM:220 OHM,5%,0.25W	57668	NTR25J-E220E
A10R1842	315-0433-00			RES,FXD,FILM:43K OHM,5%,0.25W	19701	5043CX43K00J
A10R1843	315-0182-00			RES,FXD,FILM:1.8K OHM,5%,0.25W	57668	NTR25J-E1K8
A10R1844	315-0272-00			RES,FXD,FILM:2.7K OHM,5%,0.25W	57668	NTR25J-E02K7
A10R1845	315-0103-00			RES,FXD,FILM:10K OHM,5%,0.25W	19701	5043CX10K00J
A10R1846	315-0103-00			RES,FXD,FILM:10K OHM,5%,0.25W	19701	5043CX10K00J
A10R1847	315-0203-00			RES,FXD,FILM:20K OHM,5%,0.25W	57668	NTR25J-E 20K
A10R1848	315-0113-00			RES,FXD,FILM:11K OHM,5%,0.25W	19701	5043CX11K00J
A10R1852	307-0106-00			RES,FXD,CMPSN:4.7 OHM,5%,0.25W	01121	CB 47G5
A10R1853	315-0241-00			RES,FXD,FILM:240 OHM,5%,0.25W	19701	5043CX240R0J
A10R1855	315-0473-00			RES,FXD,FILM:47K OHM,5%,0.25W	57668	NTR25J-E47K0
A10R1856	315-0474-00			RES,FXD,FILM:470K OHM,5%,0.25W	19701	5043CX470K0J92U

http://manoman.sqhill.com

Component No.	Tektronix Part No.	Serial/Assembly No. Effective	Dscont	Name & Description	Mfr. Code	Mfr. Part No.
A10R1862	315-0154-00			RES,FXD,FILM:150K OHM,5%,0.25W	57668	NTR25J-E150K
A10R1863	315-0471-00			RES,FXD,FILM:470 OHM,5%,0.25W	57668	NTR25J-E470E
A10R1864	315-0272-00			RES,FXD,FILM:2.7K OHM,5%,0.25W	57668	NTR25J-E02K7
A10R1867	315-0272-00			RES,FXD,FILM:2.7K OHM,5%,0.25W	57668	NTR25J-E02K7
A10R1869	315-0103-00			RES,FXD,FILM:10K OHM,5%,0.25W	19701	5043CX10K00J
A10R1872	315-0221-00			RES,FXD,FILM:220 OHM,5%,0.25W	57668	NTR25J-E220E
A10R1874	315-0911-00			RES,FXD,FILM:910 OHM,5%,0.25W	57668	NTR25J-E910E
A10R1875	315-0103-00			RES,FXD,FILM:10K OHM,5%,0.25W	19701	5043CX10K00J
A10R1922	315-0334-00			RES,FXD,FILM:330K OHM,5%,0.25W	57668	NTR25J-E 330K
A10R1923	311-1668-00			RES,VAR,NONWW:PNL,2 X 10K OHM,0.5W (FURN AS A SET W/R2074)	32997	81C2D-K57-BA0004
A10R1924	315-0132-00			RES,FXD,FILM:1.3K OHM,5%,0.25W	57668	NTR25J-E01K3
A10R1925	321-0411-00			RES,FXD,FILM:187K OHM,1%,0.125W,TC=T0	91637	MFF1816G18702F
A10R1926	321-0414-00			RES,FXD,FILM:200K OHM,1%,0.125W,TC=T0	07716	CEAD20002F
A10R1927	311-1229-00			RES,VAR,NONWW:TRMR,15K OHM,0.5W	32997	3386F-T04-153
A10R1928	315-0332-00			RES,FXD,FILM:3.3K OHM,5%,0.25W	57668	NTR25J-E03K3
A10R1932	315-0823-00			RES,FXD,FILM:82K OHM,5%,0.25W	57668	NTR25J-E82K
A10R1933	311-1252-00			RES,VAR,NONWW:TRMR,500K OHM,0.5W	32997	3386F-T04-504
A10R1934	321-0373-00			RES,FXD,FILM:75.0K OHM,1%,0.125W,TC=T0	19701	5033ED75K00F
A10R1935	311-1319-00			RES,VAR,NONWW:TRMR,10K OHM,0.5W	32997	3006P-W84-103
A10R1941	321-0414-00			RES,FXD,FILM:200K OHM,1%,0.125W,TC=T0	07716	CEAD20002F
A10R1942	315-0153-00			RES,FXD,FILM:15K OHM,5%,0.25W	19701	5043CX15K00J
A10R1943	315-0391-00			RES,FXD,FILM:390 OHM,5%,0.25W	57668	NTR25J-E390E
A10R1944	315-0163-00			RES,FXD,FILM:16K OHM,5%,0.25W	57668	NTR25J-E 16K
A10R1945	315-0221-00			RES,FXD,FILM:220 OHM,5%,0.25W	57668	NTR25J-E220E
A10R1946	315-0154-00			RES,FXD,FILM:150K OHM,5%,0.25W	57668	NTR25J-E150K
A10R1947	315-0102-00			RES,FXD,FILM:1K OHM,5%,0.25W	57668	NTR25JE01K0
A10R1952	315-0332-00			RES,FXD,FILM:3.3K OHM,5%,0.25W	57668	NTR25J-E03K3
A10R1953	315-0153-00			RES,FXD,FILM:15K OHM,5%,0.25W	19701	5043CX15K00J
A10R1954	315-0153-00			RES,FXD,FILM:15K OHM,5%,0.25W	19701	5043CX15K00J
A10R1955	315-0202-00			RES,FXD,FILM:2K OHM,5%,0.25W	57668	NTR25J-E 2K
A10R1956	315-0133-00			RES,FXD,FILM:13K OHM,5%,0.25W	19701	5043CX13K00J
A10R1957	315-0124-00			RES,FXD,FILM:120K OHM,5%,0.25W	19701	5043CX120K0J
A10R1962	315-0335-00			RES,FXD,FILM:3.3M OHM,5%,0.25W	01121	CB3355
A10R1963	315-0753-00			RES,FXD,FILM:75K OHM,5%,0.25W	57668	NTR25J-E75K0
A10R1964	315-0335-00			RES,FXD,FILM:3.3M OHM,5%,0.25W	01121	CB3355
A10R1965	315-0334-00			RES,FXD,FILM:330K OHM,5%,0.25W	57668	NTR25J-E 330K
A10R1966	315-0155-00			RES,FXD,FILM:1.5M OHM,5%,0.25W	19701	5043CX1M500J
A10R1967	315-0185-00			RES,FXD,FILM:1.8M OHM,5%,0.25W	01121	CB1855
A10R1968	315-0335-00			RES,FXD,FILM:3.3M OHM,5%,0.25W	01121	CB3355
A10R1982	311-1319-00			RES,VAR,NONWW:TRMR,10K OHM,0.5W	32997	3006P-W84-103
A10R1983	321-0357-00			RES,FXD,FILM:51.1K OHM,1%,0.125W,TC=T0	07716	CEAD51101F
A10R1984	321-0364-00			RES,FXD,FILM:60.4K OHM,1%,0.125W,TC=T0	19701	5043ED60K40F
A10R1985	321-0366-00			RES,FXD,FILM:63.4K OHM,1%,0.125W,TC=T0	19701	5043ED63K40F
A10R1986	321-0365-00			RES,FXD,FILM:61.9K OHM,1%,0.125W,TC=T0	07716	CEAD61901F
A10R1987	311-1225-00			RES,VAR,NONWW:TRMR,1K OHM,0.5W	32997	3386F-T04-102
A10R1988	321-0302-00			RES,FXD,FILM:13.7K OHM,1%,0.125W,TC=T0	07716	CEAD 13701F
A10R1989	311-1229-00			RES,VAR,NONWW:TRMR,15K OHM,0.5W	32997	3386F-T04-153
A10R1991	321-0385-00			RES,FXD,FILM:100K OHM,1%,0.125W,TC=T0	19701	5033ED100K0F
A10R1992	315-0752-00			RES,FXD,FILM:7.5K OHM,5%,0.25W	57668	NTR25J-E07K5
A10R1993	315-0391-00			RES,FXD,FILM:390 OHM,5%,0.25W	57668	NTR25J-E390E
A10R1994	315-0822-00			RES,FXD,FILM:8.2K OHM,5%,0.25W	19701	5043CX8K200J
A10R1995	315-0201-00			RES,FXD,FILM:200 OHM,5%,0.25W	57668	NTR25J-E200E
A10R1996	315-0103-00			RES,FXD,FILM:10K OHM,5%,0.25W	19701	5043CX10K00J
A10R1997	301-0203-00			RES,FXD,FILM:20K OHM,5%,0.5W	19701	5053CX20K00J
A10R1998	315-0102-00			RES,FXD,FILM:1K OHM,5%,0.25W	57668	NTR25JE01K0
A10R1999	315-0471-00			RES,FXD,FILM:470 OHM,5%,0.25W	57668	NTR25J-E470E
A10R2012	321-0394-00			RES,FXD,FILM:124K OHM,1%,0.125W,TC=T0	07716	CEAD12402F

http://manoman.sqhill.com

Component No.	Tektronix Part No.	Serial/Assembly No. Effective	Dscont	Name & Description	Mfr. Code	Mfr. Part No.
A10R2013	321-0396-00			RES,FXD,FILM:130K OHM,1%,0.125W,TC=T0	07716	CEAD13002F
A10R2015	321-0396-00			RES,FXD,FILM:130K OHM,1%,0.125W,TC=T0	07716	CEAD13002F
A10R2022	321-0337-00			RES,FXD,FILM:31.6K OHM,1%,0.125W,TC=T0	07716	CEAD31601F
A10R2023	321-0423-00			RES,FXD,FILM:249K OHM,1%,0.125W,TC=T0	19701	5043ED249K0F
A10R2024	315-0223-00			RES,FXD,FILM:22K OHM,5%,0.25W	19701	5043CX22K00J92U
A10R2025	315-0753-00			RES,FXD,FILM:75K OHM,5%,0.25W	57668	NTR25J-E75K0
A10R2026	315-0471-00			RES,FXD,FILM:470 OHM,5%,0.25W	57668	NTR25J-E470E
A10R2031	321-0452-00			RES,FXD,FILM:499K OHM,1%,0.125W,TC=T0	19701	5043ED499K0F
A10R2032	321-0452-00			RES,FXD,FILM:499K OHM,1%,0.125W,TC=T0	19701	5043ED499K0F
A10R2033	321-0392-00			RES,FXD,FILM:118K OHM,1%,0.125W,TC=T0	07716	CEAD11802F
A10R2034	315-0104-00			RES,FXD,FILM:100K OHM,5%,0.25W	57668	NTR25J-E100K
A10R2035	321-0433-00			RES,FXD,FILM:316K OHM,1%,0.125W,TC=T0	07716	CEAD31602F
A10R2037	315-0222-00			RES,FXD,FILM:2.2K OHM,5%,0.25W	57668	NTR25J-E02K2
A10R2038	315-0393-00			RES,FXD,FILM:39K OHM,5%,0.25W	57668	NTR25J-E39K0
A10R2042	321-0411-00			RES,FXD,FILM:187K OHM,1%,0.125W,TC=T0	91637	MFF1816G18702F
A10R2043	321-0414-00			RES,FXD,FILM:200K OHM,1%,0.125W,TC=T0	07716	CEAD20002F
A10R2044	321-0395-00			RES,FXD,FILM:127K OHM,1%,0.125W,TC=T0	07716	CEAD12702F
A10R2045	315-0104-00			RES,FXD,FILM:100K OHM,5%,0.25W	57668	NTR25J-E100K
A10R2046	321-0452-00			RES,FXD,FILM:499K OHM,1%,0.125W,TC=T0	19701	5043ED499K0F
A10R2047	301-0473-00			RES,FXD,FILM:47K OHM,5%,0.5W	19701	5053CX47K00J
A10R2048	315-0222-00			RES,FXD,FILM:2.2K OHM,5%,0.25W	57668	NTR25J-E02K2
A10R2052	321-0449-00			RES,FXD,FILM:464K OHM,1%,0.125W,TC=T0	19701	5043ED464K0F
A10R2053	321-0400-00			RES,FXD,FILM:143K OHM,1%,0.125W,TC=T0	19701	5043ED143K0F
A10R2054	321-0422-00			RES,FXD,FILM:243K OHM,1%,0.125W,TC=T0	07716	CEAD24302F
A10R2055	315-0104-00			RES,FXD,FILM:100K OHM,5%,0.25W	57668	NTR25J-E100K
A10R2056	321-0452-00			RES,FXD,FILM:499K OHM,1%,0.125W,TC=T0	19701	5043ED499K0F
A10R2057	301-0473-00			RES,FXD,FILM:47K OHM,5%,0.5W	19701	5053CX47K00J
A10R2058	315-0102-00			RES,FXD,FILM:1K OHM,5%,0.25W	57668	NTR25JE01K0
A10R2072	315-0103-00			RES,FXD,FILM:10K OHM,5%,0.25W	19701	5043CX10K00J
A10R2073	315-0103-00			RES,FXD,FILM:10K OHM,5%,0.25W	19701	5043CX10K00J
A10R2074	----- -----			(FURN AS A SET W/R1923)		
A10R2075	315-0204-00			RES,FXD,FILM:200K OHM,5%,0.25W	19701	5043CX200K0J
A10R2076	315-0103-00			RES,FXD,FILM:10K OHM,5%,0.25W	19701	5043CX10K00J
A10R2077	315-0153-00			RES,FXD,FILM:15K OHM,5%,0.25W	19701	5043CX15K00J
A10R2092	321-0189-00			RES,FXD,FILM:909 OHM,1%,0.125W,TC=T2	19701	5033ED909R0F
A10R2093	321-0150-00			RES,FXD,FILM:357 OHM,1%,0.125W,TC=T0	07716	CEAD357R0F
A10R2094	315-0103-00			RES,FXD,FILM:10K OHM,5%,0.25W	19701	5043CX10K00J
A10S1815	----- -----			(FURN AS A SET W/R1815)		
A10S1921	260-1603-00			SWITCH,PUSH:4 BUTTON,2 POLE,STORAGE	80009	260-1603-00
A10TP1836	214-0579-00			TERM,TEST POINT:BRS CD PL	80009	214-0579-00
A10U1844	156-0402-00			MICROCKT,LINEAR:TIMER	27014	LM555CN
A10U1846	156-0172-00			MICROCKT,DGTL:DUAL RETRIG MONOSTABLE MV	07263	74123 PC OR DC
A10U1866	156-0043-00			MICROCKT,DGTL:TTL,QUAD 2 INP NOR GATE	01295	SN7402N
A10U1872	156-0371-00			MICROCKT,DGTL:QUAD 2-INP NAND SCHMITT TRIG	01295	SN74132 N OR J
A10U1874	156-0041-00			MICROCKT,DGTL:TTL,DUAL D TYPE FF	01295	SN7474(N OR J)
A10U1876	156-0030-00			MICROCKT,DGTL:QUAD 2-INPUT NAND GATE	01295	SN7400(N OR J)
A10U1878	156-0221-00			MICROCKT,DGTL:QUAD D LATCH W/CLEAR	01295	SN74175N
A10VR1945	152-0166-00			SEMICOND DVC,DI:ZEN,SI,6.2V,5%,0.4W,DO-7	04713	SZ11738RL
A10VR1995	152-0166-00			SEMICOND DVC,DI:ZEN,SI,6.2V,5%,0.4W,DO-7	04713	SZ11738RL
A10VR2038	152-0304-00			SEMICOND DVC,DI:ZEN,SI,20V,5%,0.4W,DO-7	15238	Z5411
A10VR2077	152-0149-00			SEMICOND DVC,DI:ZEN,SI,10V,5%,0.4W,DO-7	15238	Z5406

http://manoman.sqhill.com

Component No.	Tektronix Part No.	Serial/Assembly No. Effective	Dscont	Name & Description	Mfr. Code	Mfr. Part No.
A11	670-6002-01			CIRCUIT BD ASSY:FAN MOTOR	80009	670-6002-01
A11B8045	147-0035-00			MOTOR,DC:BRUSHLESS,3000 RPM,10-15V	25088	1AD3001-0A
A11C8064	290-0536-00			CAP,FXD,ELCTLT:10UF,20%,25V TANTALUM	05397	T368B106M025AS
A11CR8042	152-0141-02			SEMICOND DVC,DI:SW,SI,30V,150MA,30V,DO-35	03508	DA2527 (1N4152)
A11CR8044	152-0141-02			SEMICOND DVC,DI:SW,SI,30V,150MA,30V,DO-35	03508	DA2527 (1N4152)
A11CR8046	152-0141-02			SEMICOND DVC,DI:SW,SI,30V,150MA,30V,DO-35	03508	DA2527 (1N4152)
A11CR8048	152-0141-02			SEMICOND DVC,DI:SW,SI,30V,150MA,30V,DO-35	03508	DA2527 (1N4152)
A11CR8066	152-0141-02			SEMICOND DVC,DI:SW,SI,30V,150MA,30V,DO-35	03508	DA2527 (1N4152)
A11Q8067	151-0301-00			TRANSISTOR:PNP,SI,TO-18	04713	ST898
A11R8033	321-0228-00			RES,FXD,FILM:2.32K OHM,1%,0.125W,TC=TO	19701	5043ED2K32F
A11R8035	321-0201-00			RES,FXD,FILM:1.21K OHM,1%,0.125W,TC=TO	19701	5043ED1K210F
A11R8036	315-0363-00			RES,FXD,FILM:36K OHM,5%,0.25W	57668	NTR25J-E36K0
A11R8054	323-0140-00			RES,FXD,FILM:280 OHM,1%,0.5W,TC=TO	75042	CECTO-2800F
A11R8056	323-0140-00			RES,FXD,FILM:280 OHM,1%,0.5W,TC=TO	75042	CECTO-2800F
A11R8058	303-0150-00			RES,FXD,CMPSN:15 OHM,5%,1W	01121	GB1505
A11R8065	321-0062-00			RES,FXD,FILM:43.2 OHM,0.5%,0.125W,TC=TO	57668	CRB14 FXE 43.2
A11RT8038	307-0124-00			RES,THERMAL:5K OHM,10%,NTC	15454	1DC502K-220-EC
A11U8061	156-0281-00			MICROCKT,LINEAR:4-XSTR,HIGH CUR ARRAY	02735	89164

http://manoman.sqhill.com

Component No.	Tektronix Part No.	Serial/Assembly No. Effective	Dscont	Name & Description	Mfr. Code	Mfr. Part No.
A12	670-3685-00			CIRCUIT BD ASSY:TV SYNC SEPARATOR (OPTION 05 ONLY)	80009	670-3685-00
A12C2802	283-0059-00			CAP,FXD,CER DI:1UF,+80-20%,50V (OPTION 05 ONLY)	31433	C330C105M5R5CA
A12C2803	283-0059-00			CAP,FXD,CER DI:1UF,+80-20%,50V (OPTION 05 ONLY)	31433	C330C105M5R5CA
A12C2804	281-0504-00			CAP,FXD,CER DI:10PF,+/-1PF,500V (OPTION 05 ONLY)	54583	TCC20CH2H100FYA
A12C2805	281-0504-00			CAP,FXD,CER DI:10PF,+/-1PF,500V (OPTION 05 ONLY)	54583	TCC20CH2H100FYA
A12C2812	283-0341-00			CAP,FXD,CER DI:0.047UF,10%,100V (OPTION 05 ONLY)	04222	SR301C473KAA
A12C2827	290-0530-00			CAP,FXD,ELCTLT:68UF,20%,6V (OPTION 05 ONLY)	56289	196D686X0006KA1
A12C2854	281-0632-00			CAP,FXD,CER DI:35PF,1%,500V (OPTION 05 ONLY)	52763	2RDPLZ007 35POLC
A12C2856	281-0605-00			CAP,FXD,CER DI:200PF,10%,500V (OPTION 05 ONLY)	59660	301000Y5D201K
A12C2860	281-0511-00			CAP,FXD,CER DI:22PF,+/-2.2PF,500V (OPTION 05 ONLY)	52763	2RDPLZ007 22POKC
A12C2861	283-0010-00			CAP,FXD,CER DI:0.05UF,+80-20%,50V (OPTION 05 ONLY)	04222	SR305E503ZAA
A12C2865	281-0577-00			CAP,FXD,CER DI:14PF,5%,500V (OPTION 05 ONLY)	52763	2RDPLZ007 14POJC
A12C2866	283-0010-00			CAP,FXD,CER DI:0.05UF,+80-20%,50V (OPTION 05 ONLY)	04222	SR305E503ZAA
A12C2879	290-0536-00			CAP,FXD,ELCTLT:10UF,20%,25V TANTALUM (OPTION 05 ONLY)	05397	T368B106M025AS
A12CR2807	152-0141-02			SEMICOND DVC,DI:SW,SI,30V,150MA,30V,DO-35 (OPTION 05 ONLY)	03508	DA2527 (1N4152)
A12CR2809	152-0141-02			SEMICOND DVC,DI:SW,SI,30V,150MA,30V,DO-35 (OPTION 05 ONLY)	03508	DA2527 (1N4152)
A12CR2818	152-0141-02			SEMICOND DVC,DI:SW,SI,30V,150MA,30V,DO-35 (OPTION 05 ONLY)	03508	DA2527 (1N4152)
A12CR2824	152-0141-02			SEMICOND DVC,DI:SW,SI,30V,150MA,30V,DO-35 (OPTION 05 ONLY)	03508	DA2527 (1N4152)
A12CR2825	152-0141-02			SEMICOND DVC,DI:SW,SI,30V,150MA,30V,DO-35 (OPTION 05 ONLY)	03508	DA2527 (1N4152)
A12CR2826	152-0141-02			SEMICOND DVC,DI:SW,SI,30V,150MA,30V,DO-35 (OPTION 05 ONLY)	03508	DA2527 (1N4152)
A12CR2828	152-0141-02			SEMICOND DVC,DI:SW,SI,30V,150MA,30V,DO-35 (OPTION 05 ONLY)	03508	DA2527 (1N4152)
A12CR2831	152-0141-02			SEMICOND DVC,DI:SW,SI,30V,150MA,30V,DO-35 (OPTION 05 ONLY)	03508	DA2527 (1N4152)
A12CR2865	152-0141-02			SEMICOND DVC,DI:SW,SI,30V,150MA,30V,DO-35 (OPTION 05 ONLY)	03508	DA2527 (1N4152)
A12Q2802	151-0190-00			TRANSISTOR:NPN,SI,TO-92 (OPTION 05 ONLY)	80009	151-0190-00
A12Q2803	151-0220-00			TRANSISTOR:PNP,SI,TO-92 (OPTION 05 ONLY)	80009	151-0220-00
A12Q2813	151-0188-00			TRANSISTOR:PNP,SI,TO-92 (OPTION 05 ONLY)	80009	151-0188-00
A12Q2824	151-0188-00			TRANSISTOR:PNP,SI,TO-92 (OPTION 05 ONLY)	80009	151-0188-00
A12Q2834	151-0192-00			TRANSISTOR:SELECTED (OPTION 05 ONLY)	04713	SPS8801
A12Q2854	151-0192-00			TRANSISTOR:SELECTED (OPTION 05 ONLY)	04713	SPS8801
A12Q2863	151-0188-00			TRANSISTOR:PNP,SI,TO-92 (OPTION 05 ONLY)	80009	151-0188-00
A12R2801	315-0302-00			RES,FXD,FILM:3K OHM,5%,0.25W (OPTION 05 ONLY)	57668	NTR25J-E03K0

http://manoman.sqhill.com

Component No.	Tektronix Part No.	Serial/Assembly No. Effective	Dscont	Name & Description	Mfr. Code	Mfr. Part No.
A12R2802	315-0682-00			RES,FXD,FILM:6.8K OHM,5%,0.25W (OPTION 05 ONLY)	57668	NTR25J-E06K8
A12R2803	315-0103-00			RES,FXD,FILM:10K OHM,5%,0.25W (OPTION 05 ONLY)	19701	5043CX10K00J
A12R2804	315-0123-00			RES,FXD,FILM:12K OHM,5%,0.25W (OPTION 05 ONLY)	57668	NTR25J-E12K0
A12R2805	315-0303-00			RES,FXD,FILM:30K OHM,5%,0.25W (OPTION 05 ONLY)	19701	5043CX30K00J
A12R2807	315-0124-00			RES,FXD,FILM:120K OHM,5%,0.25W (OPTION 05 ONLY)	19701	5043CX120K0J
A12R2809	315-0123-00			RES,FXD,FILM:12K OHM,5%,0.25W (OPTION 05 ONLY)	57668	NTR25J-E12K0
A12R2810	315-0103-00			RES,FXD,FILM:10K OHM,5%,0.25W (OPTION 05 ONLY)	19701	5043CX10K00J
A12R2811	315-0103-00			RES,FXD,FILM:10K OHM,5%,0.25W (OPTION 05 ONLY)	19701	5043CX10K00J
A12R2812	315-0914-00			RES,FXD,FILM:910K OHM,5%,0.25W (OPTION 05 ONLY)	19701	5043CX910K00J
A12R2813	315-0303-00			RES,FXD,FILM:30K OHM,5%,0.25W (OPTION 05 ONLY)	19701	5043CX30K00J
A12R2814	315-0563-00			RES,FXD,FILM:56K OHM,5%,0.25W (OPTION 05 ONLY)	19701	5043CX56K00J
A12R2816	315-0471-00			RES,FXD,FILM:470 OHM,5%,0.25W (OPTION 05 ONLY)	57668	NTR25J-E470E
A12R2818	315-0364-00			RES,FXD,FILM:360K OHM,5%,0.25W (OPTION 05 ONLY)	57668	NTR25J-E360K
A12R2820	315-0203-00			RES,FXD,FILM:20K OHM,5%,0.25W (OPTION 05 ONLY)	57668	NTR25J-E 20K
A12R2824	315-0182-00			RES,FXD,FILM:1.8K OHM,5%,0.25W (OPTION 05 ONLY)	57668	NTR25J-E1K8
A12R2825	315-0202-00			RES,FXD,FILM:2K OHM,5%,0.25W (OPTION 05 ONLY)	57668	NTR25J-E 2K
A12R2826	311-1226-00			RES,VAR,NONWW:TRMR,2.5K OHM,0.5W (OPTION 05 ONLY)	32997	3386F-T04-252
A12R2827	315-0681-00			RES,FXD,FILM:680 OHM,5%,0.25W (OPTION 05 ONLY)	57668	NTR25J-E680E
A12R2830	315-0112-00			RES,FXD,FILM:1.1K OHM,5%,0.25W (OPTION 05 ONLY)	19701	5043CX1K100J
A12R2833	315-0303-00			RES,FXD,FILM:30K OHM,5%,0.25W (OPTION 05 ONLY)	19701	5043CX30K00J
A12R2834	315-0561-00			RES,FXD,FILM:560 OHM,5%,0.25W (OPTION 05 ONLY)	19701	5043CX560R0J
A12R2850	315-0274-00			RES,FXD,FILM:270K OHM,5%,0.25W (OPTION 05 ONLY)	57668	NTR25J-E270K
A12R2854	315-0103-00			RES,FXD,FILM:10K OHM,5%,0.25W (OPTION 05 ONLY)	19701	5043CX10K00J
A12R2856	315-0154-00			RES,FXD,FILM:150K OHM,5%,0.25W (OPTION 05 ONLY)	57668	NTR25J-E150K
A12R2860	315-0822-00			RES,FXD,FILM:8.2K OHM,5%,0.25W (OPTION 05 ONLY)	19701	5043CX8K200J
A12R2861	315-0123-00			RES,FXD,FILM:12K OHM,5%,0.25W (OPTION 05 ONLY)	57668	NTR25J-E12K0
A12R2863	315-0822-00			RES,FXD,FILM:8.2K OHM,5%,0.25W (OPTION 05 ONLY)	19701	5043CX8K200J
A12R2875	315-0273-00			RES,FXD,FILM:27K OHM,5%,0.25W (OPTION 05 ONLY)	57668	NTR25J-E27K0
A12R2879	315-0100-00			RES,FXD,FILM:10 OHM,5%,0.25W (OPTION 05 ONLY)	19701	5043CX10RR00J
A12U2810	156-0136-00			MICROCKT,LINEAR:OPNL AMPL (OPTION 05 ONLY)	02735	CA3030
A12VR2827	152-0395-00			SEMICOND DVC,DI:ZEN,SI,4.3V,5%,0.4W (OPTION 05 ONLY)	04713	SZG35009K18

http://manoman.sqhill.com

Component No.	Tektronix Part No.	Serial/Assembly No. Effective	Dscont	Name & Description	Mfr. Code	Mfr. Part No.
A12VR2832	152-0195-00			SEMICOND DVC,DI:ZEN,SI,5.1V,5%,0.4W,DO-7 (OPTION 05 ONLY)	04713	SZ11755RL

http://manoman.sqhill.com

Component No.	Tektronix Part No.	Serial/Assembly No. Effective	Dscont	Name & Description	Mfr. Code	Mfr. Part No.
A13	670-2744-02	B200000	B200947	CIRCUIT BD ASSY:INVERTER	80009	670-2744-02
A13	670-2744-04	B200948		CIRCUIT BD ASSY:INVERTER (OPTION 07 ONLY)	80009	670-2744-04
A13C1603	283-0178-00			CAP,FXD,CER DI:0.1UF,20%,100V (OPTION 07 ONLY)	05397	C330C104Z1U1CA
A13C1605	290-0531-00			CAP,FXD,ELCTLT:100UF,20%,10V (OPTION 07 ONLY)	05397	T368C107M010AS
A13C1609	283-0178-00			CAP,FXD,CER DI:0.1UF,20%,100V (OPTION 07 ONLY)	05397	C330C104Z1U1CA
A13C1614	290-0573-00			CAP,FXD,ELCTLT:2.7UF,20%,50V (OPTION 07 ONLY)	05397	T368B275M050AS
A13C1622	290-0708-00			CAP,FXD,ELCTLT:820UF,20%,,6V (OPTION 07 ONLY)	06001	69F2201G7
A13C1626	290-0528-00			CAP,FXD,ELCTLT:15UF,20%,50V (OPTION 07 ONLY)	05397	T368C156M050AS
A13C1652	283-0110-00			CAP,FXD,CER DI:0.005UF,+80-20%,150V (OPTION 07 ONLY)	59660	855-547-E-502Z
A13C1654	283-0110-00			CAP,FXD,CER DI:0.005UF,+80-20%,150V (OPTIO 07 ONLY)	59660	855-547-E-502Z
A13C1662	283-0110-00			CAP,FXD,CER DI:0.005UF,+80-20%,150V (OPTION 07 ONLY)	59660	855-547-E-502Z
A13C1664	283-0110-00			CAP,FXD,CER DI:0.005UF,+80-20%,150V (OPTION 07 ONLY)	59660	855-547-E-502Z
A13CR1601	152-0198-00			SEMICOND DVC,DI:RECT,SI,200V,3A,A249 (OPTION 07 ONLY)	03508	1N5624
A13CR1624	152-0333-00			SEMICOND DVC,DI:SW,SI,55V,200MA,DO-35 (OPTION 07 ONLY)	07263	FDH-6012
A13CR1625	152-0107-00			SEMICOND DVC,DI:RECT,SI,400 V,400MA,A1 (OPTION 07 ONLY)	12969	"G727"
A13CR1626	152-0107-00			SEMICOND DVC,DI:RECT,SI,400 V,400MA,A1 (OPTION 07 ONLY)	12969	"G727"
A13CR1627	152-0107-00			SEMICOND DVC,DI:RECT,SI,400 V,400MA,A1 (OPTION 07 ONLY)	12969	"G727"
A13CR1628	152-0107-00			SEMICOND DVC,DI:RECT,SI,400 V,400MA,A1 (OPTION 07 ONLY)	12969	"G727"
A13CR1632	152-0333-00			SEMICOND DVC,DI:SW,SI,55V,200MA,DO-35 (OPTION 07 ONLY)	07263	FDH-6012
A13CR1634	152-0333-00			SEMICOND DVC,DI:SW,SI,55V,200MA,DO-35 (OPTION 07 ONLY)	07263	FDH-6012
A13CR1643	152-0198-00			SEMICOND DVC,DI:RECT,SI,200V,3A,A249 (OPTION 07 ONLY)	03508	1N5624
A13Q1606	151-0301-00			TRANSISTOR:PNP,SI,TO-18 (OPTION 07 ONLY)	04713	ST898
A13Q1608	151-0301-00			TRANSISTOR:PNP,SI,TO-18 (OPTION 07 ONLY)	04713	ST898
A13Q1622	151-0302-00			TRANSISTOR:NPN,SI,TO-18 (OPTION 07 ONLY)	04713	ST899
A13Q1626	151-0506-00			SCR:SI,RO-44 (OPTION 07 ONLY)	80009	151-0506-00
A13Q1642	151-0302-00			TRANSISTOR:NPN,SI,TO-18 (OPTION 07 ONLY)	04713	ST899
A13Q1644	151-0335-00			TRANSISTOR:PNP,SI,TO-126,SEL (OPTION 07 ONLY)	04713	SJE917
A13R1604	315-0202-00			RES,FXD,FILM:2K OHM,5%,0.25W (OPTION 07 ONLY)	57668	NTR25J-E 2K
A13R1605	315-0752-00			RES,FXD,FILM:7.5K OHM,5%,0.25W (OPTION 07 ONLY)	57668	NTR25J-E07K5
A13R1607	315-0272-00			RES,FXD,FILM:2.7K OHM,5%,0.25W (OPTION 07 ONLY)	57668	NTR25J-E02K7
A13R1609	315-0511-00			RES,FXD,FILM:510 OHM,5%,0.25W (OPTION 07 ONLY)	19701	5043CX510R0J
A13R1611	315-0511-00			RES,FXD,FILM:510 OHM,5%,0.25W	19701	5043CX510R0J

http://manoman.sqhill.com

Component No.	Tektronix Part No.	Serial/Assembly No. Effective	Dscont	Name & Description	Mfr. Code	Mfr. Part No.
				(OPTION 07 ONLY)		
A13R1613	311-1248-00			RES,VAR,NONWW:TRMR,500 OHM,0.5W (OPTION 07 ONLY)	32997	3386X-T07-501
A13R1614	315-0202-00			RES,FXD,FILM:2K OHM,5%,0.25W (OPTION 07 ONLY)	57668	NTR25J-E 2K
A13R1617	315-0102-00			RES,FXD,FILM:1K OHM,5%,0.25W (OPTION 07 ONLY)	57668	NTR25JE01K0
A13R1618	315-0101-00			RES,FXD,FILM:100 OHM,5%,0.25W (OPTION 07 ONLY)	57668	NTR25J-E 100E
A13R1622	315-0102-00			RES,FXD,FILM:1K OHM,5%,0.25W (OPTION 07 ONLY)	57668	NTR25JE01K0
A13R1623	316-0103-00			RES,FXD,CMPSN:10K OHM,10%,0.25W (OPTION 07 ONLY)	01121	CB1031
A13R1624	315-0302-00			RES,FXD,FILM:3K OHM,5%,0.25W (OPOTION 07 ONLY)	57668	NTR25J-E03K0
A13R1625	315-0101-00	B200000	B200537	RES,FXD,FILM:100 OHM,5%,0.25W	57668	NTR25J-E 100E
A13R1625	315-0151-00	B200538		RES,FXD,FILM:150 OHM,5%,0.25W (OPTION 07 ONLY)	57668	NTR25J-E150E
A13R1626	308-0450-00			RES,FXD,WW:70 OHM,1%,3W (OPTION 07 ONLY)	00213	1240S-70-1
A13R1631	308-0450-00	B200000	B200947	RES,FXD,WW:70 OHM,1%,3W	00213	1240S-70-1
A13R1631	308-0223-00	B200948		RES,FXD,WW:35 OHM,5%,3W (OPTION 07 ONLY)	00213	1240S-35-5
A13R1633	311-1501-00			RES,VAR,NONWW:TRMR,20 OHM,0.5W (OPTION 07 ONLY)	32997	3386 X-T07-200
A13R1639	315-0153-00			RES,FXD,FILM:15K OHM,5%,0.25W (OPTION 07 ONLY)	19701	5043CX15K00J
A13R1640	315-0102-00			RES,FXD,FILM:1K OHM,5%,0.25W (OPTION 07 ONLY)	57668	NTR25JE01K0
A13R1641	315-0153-00			RES,FXD,FILM:15K OHM,5%,0.25W (OPATION 07 ONLY)	19701	5043CX15K00J
A13R1642	315-0470-00			RES,FXD,FILM:47 OHM,5%,0.25W (OPTION 07 ONLY)	57668	NTR25J-E47E0
A13R1645	307-0113-00			RES,FXD,CMPSN:5.1 OHM,5%,0.25W (OPTION 07 ONLY)	01121	CB51G5
A13R1652	308-0459-00	B200000	B200947	RES,FXD,WW:1.1 OHM,5%,3W	01686	T2B-791.1-5
A13R1652	308-0245-00	B200948		RES,FXD,WW:0.6 OHM,5%,2W (OPTION 07 ONLY)	00213	310S .6-5
A13R1654	308-0459-00	B200000	B200947	RES,FXD,WW:1.1 OHM,5%,3W	01686	T2B-791.1-5
A13R1654	308-0245-00	B200948		RES,FXD,WW:0.6 OHM,5%,2W (OPTION 07 ONLY)	00213	310S .6-5
A13R1662	308-0459-00	B200000	B200947	RES,FXD,WW:1.1 OHM,5%,3W	01686	T2B-791.1-5
A13R1662	308-0245-00	B200948		RES,FXD,WW:0.6 OHM,5%,2W (OPTION 07 ONLY)	00213	310S .6-5
A13R1664	308-0459-00	B200000	B200947	RES,FXD,WW:1.1 OHM,5%,3W	01686	T2B-791.1-5
A13R1664	308-0245-00	B200948		RES,FXD,WW:0.6 OHM,5%,2W (OPTION 07 ONLY)	00213	310S .6-5
A13T1601	120-0637-00			XFMR,TOROID: (OPTION 07 ONLY)	TK2042	ORDER BY DESCR
A13T1631	120-0852-00			XFMR,TOROID: (OPTION 07 ONLY)	TK2042	ORDER BY DESCR
A13VR1604	152-0306-00			SEMICOND DVC,DI:ZEN,SI,9.1V,5%,0.4W,DO-7 (OPTION 07 ONLY)	12954	1N960B
A13VR1605	152-0306-00			SEMICOND DVC,DI:ZEN,SI,9.1V,5%,0.4W,DO-7 (OPTION 07 ONLY)	12954	1N960B
A13VR1622	152-0241-00			SEMICOND DVC,DI:ZEN,SI,33V,5%,0.4W,DO-7 (OPTION 07 ONLY)	14552	1N973B
A13VR1639	152-0279-00			SEMICOND DVC,DI:ZEN,SI,5.1V,5%,0.4W,DO-7 (OPTION 07 ONLY)	14552	TD3810989
A13VR1641	152-0279-00			SEMICOND DVC,DI:ZEN,SI,5.1V,5%,0.4W,DO-7 (OPTION 07 ONLY)	14552	TD3810989

http://manoman.sqhill.com

Component No.	Tektronix Part No.	Serial/Assembly No. Effective	Dscont	Name & Description	Mfr. Code	Mfr. Part No.
A14	670-6004-00			CIRCUIT BD ASSY:PROBE CODING	80009	670-6004-00
A14DS9040	150-1063-00			LT EMITTING DIO:YELLOW,585 NM,40 MA	15513	PCH190-MA
A14DS9060	150-1063-00			LT EMITTING DIO:YELLOW,585 NM,40 MA	15513	PCH190-MA
A14P9050	131-0608-00			TERMINAL,PIN:0.365 L X 0.025 BRZ GLD PL (QUANTITY OF 3)	22526	48283-036

http://manoman.sqhill.com

Component No.	Tektronix Part No.	Serial/Assembly No. Effective	Dscont	Name & Description	Mfr. Code	Mfr. Part No.
C1601	290-0667-00			CAP,FXD,ELCTLT:330UF,+75-10%,50V	56289	500D158
C1671	283-0000-00			CAP,FXD,CER DI:0.001UF,+100-0%,500V	59660	831-610-Y5U0102P
C1772	283-0263-00			CAP,FXD,CER DI:2200PF,20%,3000V (MOUNTED ON REAR PANEL OF 466. NOT USED WHEN INSTR IS EQUIPPED WITH BOTH OPT 4 AND OPT 7)	59660	828556Y5R0222M
C1773	283-0263-00			CAP,FXD,CER DI:2200PF,20%,3000V (SEE FOOTNOTE ON C1772)	59660	828556Y5R0222M
DL339	119-0481-00			DELAY LINE,ELEC:120NS,100 OHM	80009	119-0481-00
DS965	150-1032-00			LT EMITTING DIO:YELLOW,585NM,30MA MAX	50434	HLMP3401
DS967	150-1001-02			LT EMITTING DIO:RED,660NM,50MA MAX	50434	HLMP3000
DS1140	150-1001-02			LT EMITTING DIO:RED,660NM,50MA MAX	50434	HLMP3000
DS1239	150-1001-02			LT EMITTING DIO:RED,660NM,50MA MAX	50434	HLMP3000
DS1572	150-1001-02			LT EMITTING DIO:RED,660NM,50MA MAX	50434	HLMP3000
DS5034	150-1001-02			LT EMITTING DIO:RED,660NM,50MA MAX	50434	HLMP3000
DS5038	150-1001-02			LT EMITTING DIO:RED,660NM,50MA MAX	50434	HLMP3000
F1601	159-0038-00			FUSE,CARTRIDGE:3AG,15A,32V,2SEC (OPTION 07 ONLY)	71400	AGC-CW-15
F1701	159-0016-00			FUSE,CARTRIDGE:3AG,1.5,250V,FAST BLOW	71400	AGC-CW-1 1/2
F1701	159-0042-00			FUSE,CARTRIDGE:3AG,0.75A,250V,0.15SEC (OPTION A1,A2,A3,A4)	75915	312.750
F1702	159-0172-00			FUSE,CARTRIDGE:TYPE C,13AMP (INSIDE OPTION A2 POWER CORD ONLY)	S3629	PCC-1089
FL1701	119-0376-01			FILTER,RFI:2 X 3A,250VAC,400HZ (OPTION 04 ONLY)	TK2038	ORDER BY DESCR
J145	131-0955-00			CONN,RCPT,ELEC:BNC,FEMALE (STANDARD, OPTION 05 & 07)	13511	31-279
J145	131-1315-01			CONN,RCPT,ELEC:BNC,FEMALE (OPTION 04 ONLY)	80009	131-1315-01
J159	131-0955-00			CONN,RCPT,ELEC:BNC,FEMALE (STANDARD, OPTION 05 & 07)	13511	31-279
J159	131-1315-01			CONN,RCPT,ELEC:BNC,FEMALE (OPTION 04 ONLY)	80009	131-1315-01
J859	131-0955-00			CONN,RCPT,ELEC:BNC,FEMALE (STANDARD, OPTION 05 & 07)	13511	31-279
J859	131-1315-01			CONN,RCPT,ELEC:BNC,FEMALE (OPTION 04 ONLY)	80009	131-1315-01
J918	131-0955-00			CONN,RCPT,ELEC:BNC,FEMALE (STANDARD, OPTION 05 & 07)	13511	31-279
J918	131-1315-01			CONN,RCPT,ELEC:BNC,FEMALE (OPTION 04 ONLY)	80009	131-1315-01
L1551	108-0779-00			COIL,TUBE DEFL:TRACE ROTATION	TK2038	ORDER BY DESCR
L1561	108-0714-00			COIL,TUBE DEFL:Y AXIS ALIGNMENT	TK2038	ORDER BY DESCR
P1601	131-1556-00			CONN,RCPT,ELEC:PWR,MALE,125VAC,15A (OPTION 07 ONLY)	TK2165	ORDER BY DESCR
P9050	131-0608-00			TERMINAL,PIN:0.365 L X 0.025 BRZ GLD PL (QUANTITY OF 3)	22526	48283-036
Q1486	151-0140-00			TRANSISTOR:NPN,SI,TO-3	04713	SJ7020
Q1652	153-0636-00			TRANSISTOR:SELECTED (OPTION 07 ONLY)	80009	153-0636-00
Q1654	153-0636-00			TRANSISTOR:SELECTED (OPTION 07 ONLY)	80009	153-0636-00
Q1662	153-0636-00			TRANSISTOR:SELECTED (OPTION 07 ONLY)	80009	153-0636-00
Q1664	153-0636-00			TRANSISTOR:SELECTED (OPTION 07 ONLY)	80009	153-0636-00
Q1716	151-0311-01			TRANSISTOR:NPN,SI,TO-126	04713	SJE908
Q1734	151-0476-00			TRANSISTOR:NPN,SI,TO-220AB	02735	68430
Q1756	151-0477-00			TRANSISTOR:NPN,SI,X-86	04713	SJE374
Q1766	151-0478-00			TRANSISTOR:NPN,SI,TO-220	80009	151-0478-00
Q1776	151-0478-00			TRANSISTOR:NPN,SI,TO-220	80009	151-0478-00

http://manoman.sqhill.com

Component No.	Tektronix Part No.	Serial/Assembly No. Effective	Dscont	Name & Description	Mfr. Code	Mfr. Part No.
Q1788	151-0478-00			TRANSISTOR:NPN,SI,TO-220	80009	151-0478-00
Q1792	151-0390-00			TRANSISTOR:NPN,SI,X-81	04713	SPS3414ORMPSU45
R625	315-0101-00			RES,FXD,FILM:100 OHM,5%,0.25W (OPTION 05 ONLY)	57668	NTR25J-E 100E
R1116	311-1464-00			RES,VAR,WW:PNL,2K OHM,2W	02111	534-264
R1671	308-0077-00			RES,FXD,WW:1K OHM,5%,3W (OPTION 07 ONLY)	00213	1240S 1000-5
S1701	260-0834-00			SWITCH,TOGGLE:DPDT,5A,125VAC,ON-ON	09353	U21-SHZQE
S1702	260-0551-00			SWITCH,THRMSTC:NC,OPEN 86.1,CL 74,10A,240V	81439	36 T 21 3780
S1703	260-1300-01			SWITCH,SLIDE:DPDT,3A,125V	82389	11A1354
S1765	260-0760-00			SWITCH,SENS:SUBMINIATURE,10A,125/240VAC	01963	E62-10A
T1701	120-0908-00			XFMR,PWR,STPDN:	80009	120-0908-00
V1555	154-0750-00			ELECTRON TUBE:CRT,T4640-0	80009	154-0750-00

http://manoman.sghill.com

DIAGRAMS AND CIRCUIT BOARD ILLUSTRATIONS

Symbols and Reference Designators

Electrical components shown on the diagrams are in the following units unless noted otherwise:

Capacitors = Values one or greater are in picofarads (pF).
Values less than one are in microfarads (μF).

Resistors = Ohms (Ω).

Graphic symbols and class designation letters are based on ANSI Standard Y32.2-1975.

Logic symbology is based on ANSI Y32.14-1973 in terms of positive logic. Logic symbols depict the logic function performed and may differ from the manufacturer's data.

The overline on a signal name indicates that the signal performs its intended function when it goes to the low state.

Abbreviations are based on ANSI Y1.1-1972.

Other ANSI standards that are used in the preparation of diagrams by Tektronix, Inc. are:

Y14.15, 1966	Drafting Practices.
Y14.2, 1973	Line Conventions and Lettering.
Y10.5, 1968	Letter Symbols for Quantities Used in Electrical Science and Electrical Engineering.

The following prefix letters are used as reference designators to identify components or assemblies on the diagrams.

A	Assembly, separable or repairable (circuit board, etc)	H	Heat dissipating device (heat sink, heat radiator, etc)	S	Switch or contactor
AT	Attenuator, fixed or variable	HR	Heater	T	Transformer
B	Motor	HY	Hybrid circuit	TC	Thermocouple
BT	Battery	J	Connector, stationary portion	TP	Test point
C	Capacitor, fixed or variable	K	Relay	U	Assembly, inseparable or non-repairable (integrated circuit, etc.)
CB	Circuit breaker	L	Inductor, fixed or variable	V	Electron tube
CR	Diode, signal or rectifier	M	Meter	VR	Voltage regulator (zener diode, etc.)
DL	Delay line	P	Connector, movable portion	W	Wirestrap or cable
DS	Indicating device (lamp)	Q	Transistor or silicon-controlled rectifier	Y	Crystal
E	Spark Gap, Ferrite bead	R	Resistor, fixed or variable	Z	Phase shifter
F	Fuse	RT	Thermistor		
FL	Filter				

The following special symbols may appear on the diagrams:

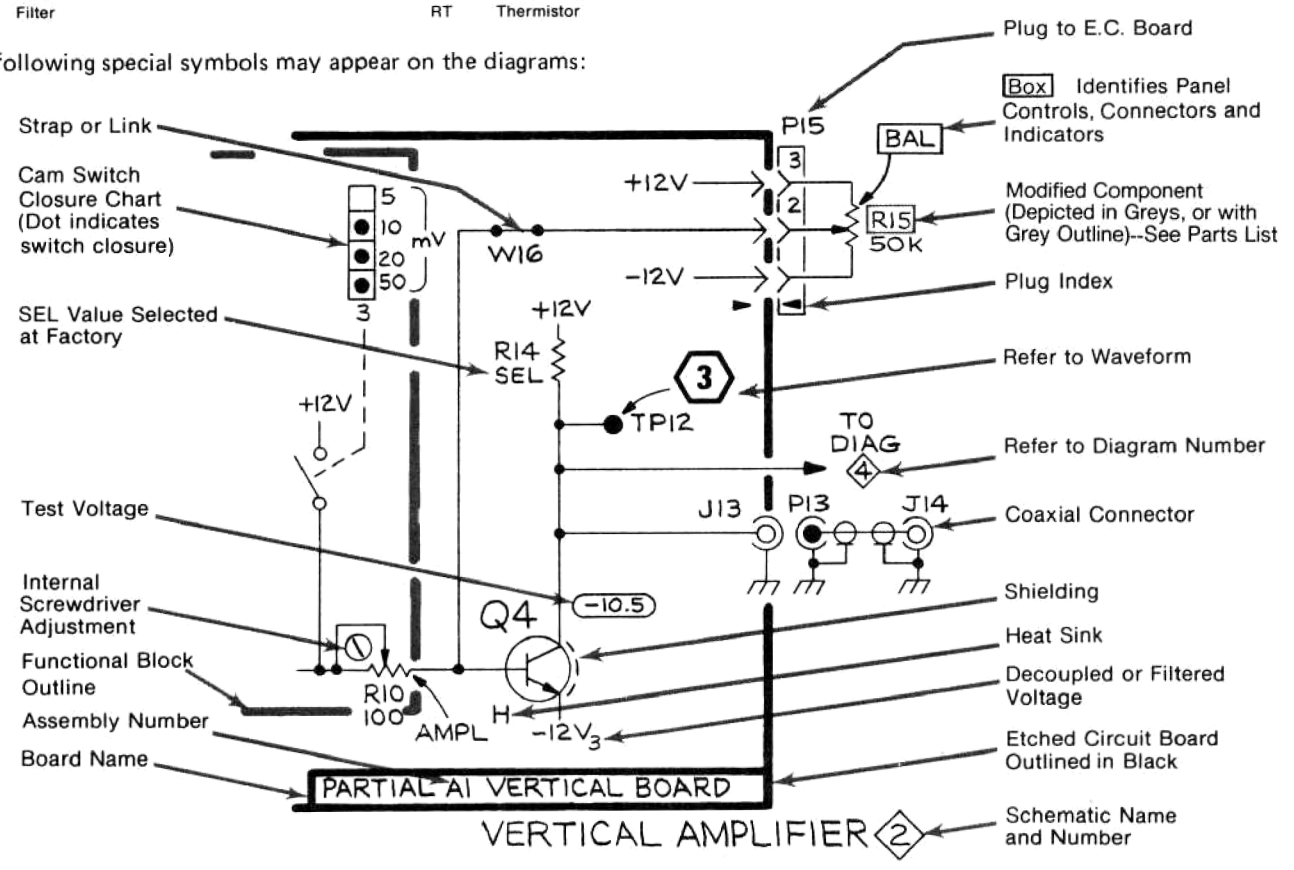

REV JUL 1984

http://manoman.sqhill.com

NOTE
LEAD CONFIGURATIONS AND CASE STYLES ARE TYPICAL, BUT MAY VARY DUE TO VENDOR CHANGES OR INSTRUMENT MODIFICATIONS.

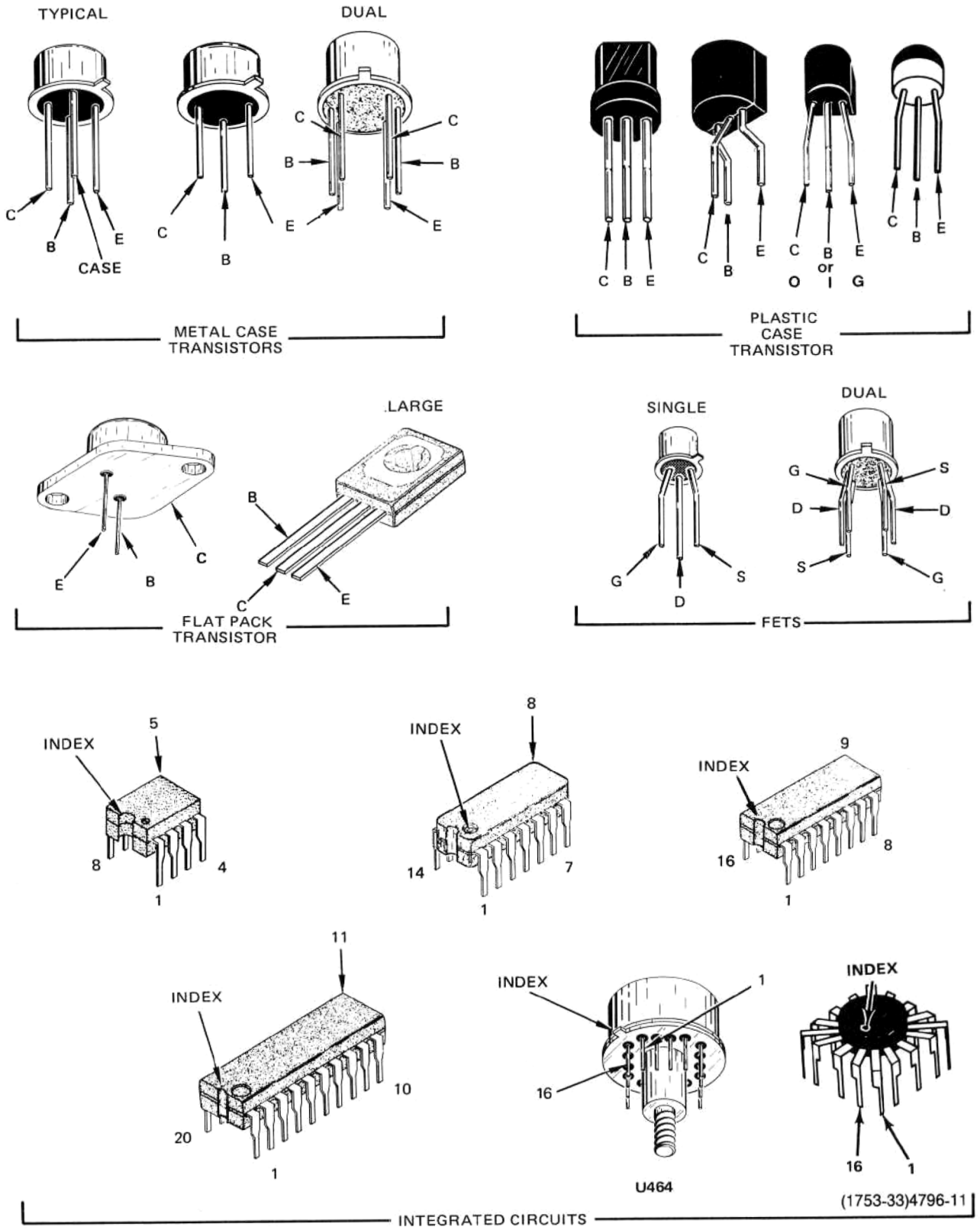

Figure 7-1. Semiconductor Lead Configurations.

http://manoman.sqhill.com

CALIBRATOR FAN MOTOR 14
Q1362, Q1372, Q1376
Q1698, U1690

POWER SUPPLY
Q1716 THRU Q1792
U1724
U1762
11
+160V
+140V
+15V
+5V
+65V
-8V
-15V
LINE TRIGGER

STORAGE CONTROL
Q1812, Q1816
Q1822, Q1802
Q1834, Q1836
Q1838, Q1832
12

CLOCK OSC
Q1864
12

STORAGE TIMING REGISTER AND LOGIC
Q1864, Q1872
U1844, U1846
U1866, U1872
U1874, U1876
U1878
12
G
K
A
Ā
B
E
Ē
H
I
J

STORAGE TRANSFER SWITCHING
Q1952, Q1956, Q1962
Q1964, Q1966, Q1968
13

100Hz OSC
Q1842
12
L

5kHz OSC
Q1852
12
M

STORAGE OPNL AMPLS AND DIODE SWITCHES
Q1938, Q1942
Q1944, Q1948
Q1992, Q1994
Q1996, Q1998
Q2022, Q2024
Q2026, Q2032
Q2036, Q2042
Q2046, Q2054
Q2056, Q2072
Q2074, Q2078
13

+1.4V SUPPLY
Q2092, Q2094
11
-15V
+5V

FRONT MESH
FAST MESH
COLLECTOR
CE3
CE2
CE1
FCA
FGK
(FLOOD GUN CATHODE)

CH 1 OR X

CH 1 PREAMPL
Q3297 A & B
U3290, Q3175
Q3375, Q3155
Q3355, Q3344
Q3346
1

CHANNEL SWITCHING
U3605, U3705, Q3636
Q3619, Q3719, Q3617
CR3447, CR3443, CR3445
CR3441, CR3432, CR3438
CR3434, CR3436, CR3545
CR3547, CR3543, CR3541
3A

DELAYLINE DRIVER
Q3426
Q3118
3A

DELAYLINE DL339
3A

VERTICAL OUTPUT AMPL
Q412, Q416
Q422, Q426
U464
4

V1555

CH 2 OR Y

CH 2 PREAMPL
Q3698 A & B
U3790, Q3675
Q3875, Q3655
Q3855, Q3646
Q3644
2

NORMAL TRIG SIGNAL PICKOFF
Q3215
Q3118
3A

CHOP CLOCK
U3805
U3905
3A

CHOPBLANK AMPL
Q3812
3A

ALTERNATE AMPL
Q919
8

CH 2 SIGNAL PICKOFF AMPL
Q3746, Q3954
Q3845, Q3948
Q3938, Q3833
2

CH 1 SIGNAL PICKOFF AMPL
Q3150, Q3250
Q3045, Q3145
Q3004, Q3038
1

CH 1 VERT SIGNAL OUT

LINE TRIGGER

TRIGGER VIEW AMPL
Q672
Q682
5

A SWP END
Q924
Q926
8

A SWP START COMPARATOR
Q1002
6

X,Y PREAMPL
Q1212
Q1222
9

HORIZONTAL AMPL
Q1232, Q1236
Q1242, Q1246
Q1272, Q1274
Q1276, Q1282
Q1284, Q1286
9

A TRIGGER INPUT AMPL
Q622
Q624
5

TRIGGER GENERATOR
U650
5

SWEEP AND Z AXIS LOGIC
Q820, Q822
Q824, Q834
Q844, Q852
Q854, Q856
Q864, Q866
Q882, Q884
Q886, Q904
Q906, Q912
Q914, Q916
Q954, Q962
Q964, Q982
Q984, Q986
U980
8

A SWP DISCONNECT
Q1024
6

A SWEEP GENERATOR
Q1008
Q1030
Q1036
6

A SWP OUTPUT AMPL
Q1038
10

A EXTERNAL TRIGGER

+A GATE OUT

A SWP CAL R1145

A SWP CAL EF
Q1140
7

CRT CKT
Q1472, Q1476
Q1484, Q1486
Q1492, Q1496
T1501
10

REDUCED SCAN

Z AXIS AMPL
Q1424, Q1428
Q1432, Q1436
10

C1524

B TRIGGER INPUT AMPL
Q522
Q524
5

TRIGGER GENERATOR
U550
5

+B GATE OUT

B SWP CAL R1175

B SWP CAL EF
Q1170
7

B SWP DISCONNECT
Q1084
6

B SWEEP GENERATOR
Q1066
Q1090
Q1096
6

B SWP OUTPUT AMPL
Q1098
6

MIXED

B EXTERNAL TRIGGER

B SWP END
Q872
Q874
8

B SWP START COMPARATOR
Q1062, Q1064
6

EXTERNAL Z AXIS

4796-09

Figure 7-2. The 466 Block Diagram.

http://manoman.sqhill.com

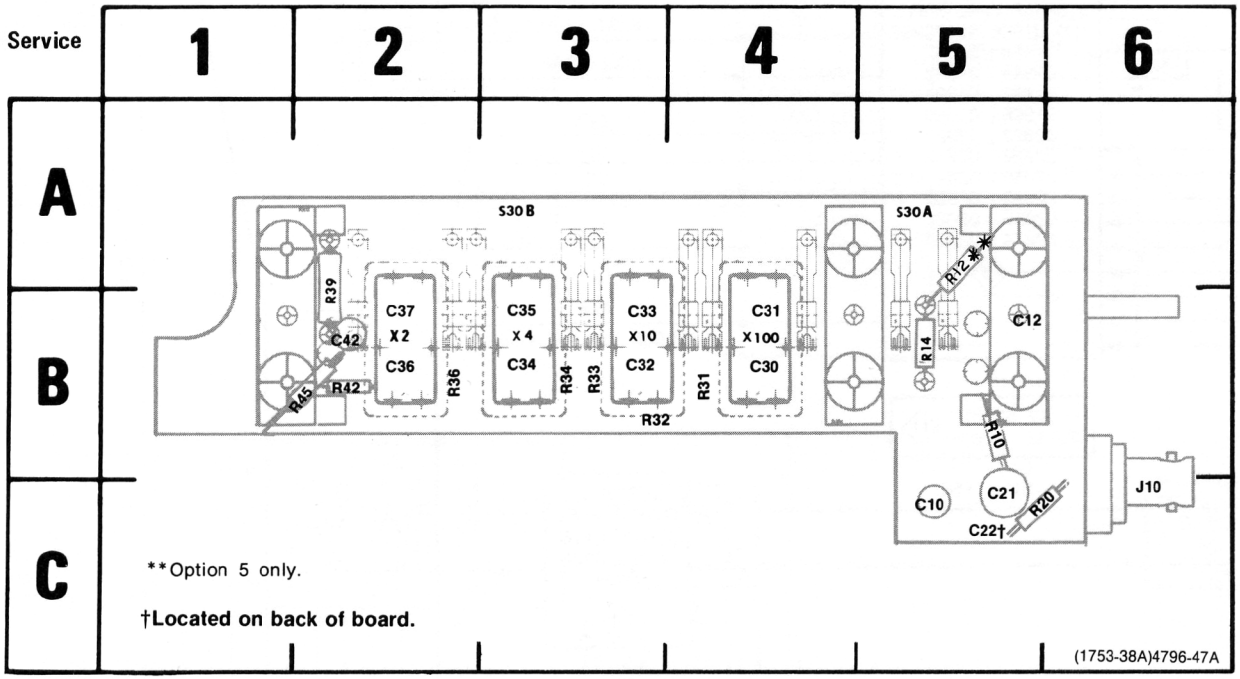

Figure 7-3. A1—Attenuator Board.

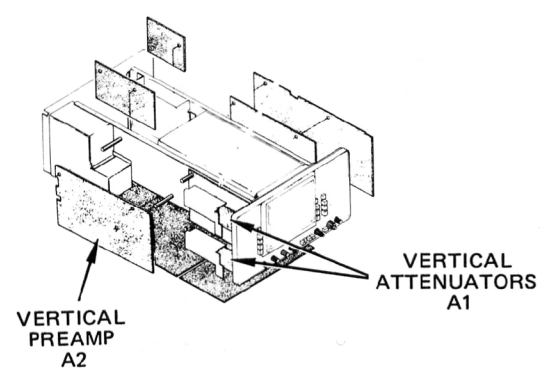

CKT NO	GRID LOC	CKT NO	GRID LOC
C10	5C	R31	4B
C12	5B	R32	3B
C21	5C	R33	3B
C22†	6C	R34	3B
C30	4B	R36	2B
C31	4B	R39	2A
C32	3B	R42	2B
C33	3B	R45	2B
C34	3B		
C35	3B	S30A	5A
C36	2B	S30B	3A
C37	2B		
C42	2B	X2	2B
		X4	3B
J10	6C	X10	3B
		X100	4B
R10	5B		
R14	5B		
R15 †			
R20	5C		

http://manoman.sqhill.com

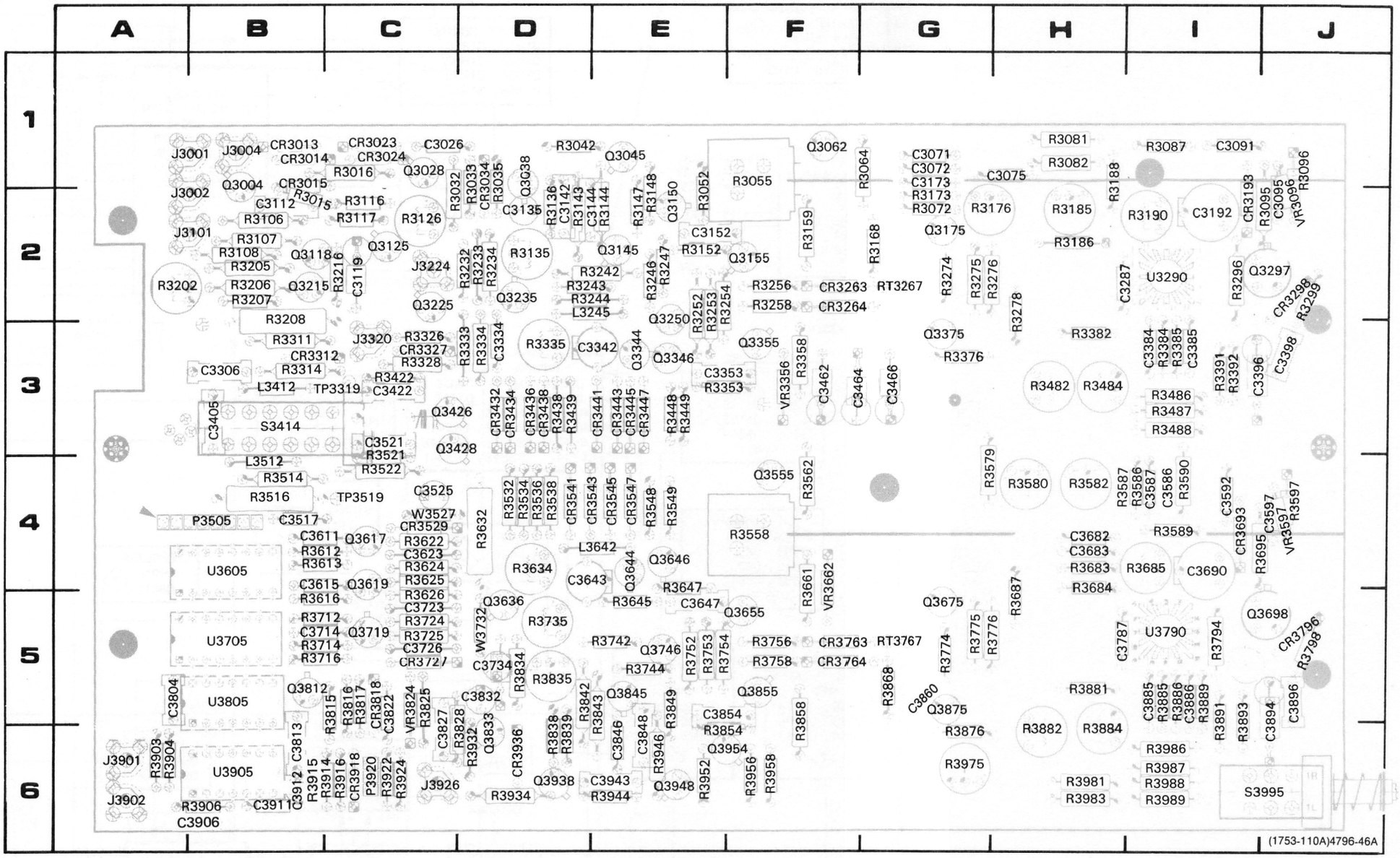

Figure 7-4. A2—Vertical Preamp Board.

CKT NO	GRID LOC
C3026	1C
C3071	1G
C3072	1G
C3075	1H
C3091	1I
C3095	2J
C3112	1B
C3119	2C
C3135	2D
C3142	2D
C3144	2D
C3152	2E
C3173	1G
C3192	2I
C3287	2I
C3306	3B
C3334	3D
C3342	3E
C3353	3E
C3384	3I
C3385	3I
C3396	3I
C3398	3J
C3405	3B
C3422	3C
C3462	3F
C3464	3F
C3466	3G
C3517	4B
C3521	3C
C3525	4C
C3586	4H
C3587	4I
C3592	4I
C3597	4J
C3611	4B
C3615	4B
C3623	4C
C3643	4D
C3647	5E
C3682	4H
C3683	4H
C3690	4I
C3714	5B
C3723	5C
C3726	5C
C3734	5D
C3787	5H
C3804	5A
C3813	5B
C3822	5C
C3827	6C
C3832	5D
C3846	6E
C3848	6E
C3854	5E
C3860	5G
C3885	5I
C3886	5I
C3894	6I
C3896	6J
C3906	6A
C3911	6B
C3912	6B
C3943	6E
CR3013	1B
CR3014	1B
CR3015	1B
CR3023	1C
CR3024	1C
CR3034	1D
CR3193	2I
CR3263	2F
CR3264	3F
CR3298	2J
CR3312	3B
CR3327	3C
CR3432	3D
CR3434	3D
CR3436	3D
CR3438	3D
CR3441	3D
CR3443	3E
CR3445	3E
CR3447	3E
CR3529	4C
CR3541	4D
CR3543	4D
CR3545	4E
CR3547	4E
CR3693	4I
CR3727	5C
CR3763	5F
CR3764	5F
CR3796	5J
CR3818	5C
CR3918	6C
CR3936	6D
J3001	1B
J3002	1B
J3004	1B
J3101	2A
J3224	2C
J3320	3C
J3901	6A
J3902	6A
J3926	6C
L3245	2D
L3412	3B
L3512	3B
L3642	4D
P3505	4A
P3920	6C
Q3004	1B
Q3028	1C
Q3038	1D
Q3045	1E
Q3062	1F
Q3118	2B
Q3125	2C
Q3145	2E
Q3150	1E
Q3155	2F
Q3175	2G
Q3215	2B
Q3225	2C
Q3235	2D
Q3250	2E
Q3297	2J
Q3344	3E
Q3346	3E
Q3355	3F
Q3375	3G
Q3426	3D
Q3428	3D
Q3555	3F
Q3617	4C
Q3619	5C
Q3636	5D
Q3644	4E
Q3646	4E
Q3655	5F
Q3675	4G
Q3698	5J
Q3719	5C
Q3746	5E
Q3812	5B
Q3833	6D
Q3845	5E
Q3855	5F
Q3875	5G
Q3938	6E
Q3948	6E
Q3954	6E
R3015	1B
R3016	1C
R3032	2C
R3033	1D
R3035	1D
R3042	1D
R3052	2E
R3055	1F
R3064	1G
R3072	2G
R3081	1H
R3082	1H
R3087	1I
R3095	2J
R3096	2J
R3106	2B
R3107	2B
R3108	2B
R3116	1C
R3117	2C
R3126	2C
R3135	2D
R3136	2D
R3143	2D
R3144	2E
R3147	2E
R3148	2E
R3152	2E
R3159	2F
R3168	2G
R3173	2G
R3176	2G
R3185	2H
R3186	2H
R3188	1H
R3190	2I
R3202	2A
R3205	2B
R3206	2B
R3207	2B
R3208	2B
R3216	2C
R3232	2D
R3233	2D
R3234	2D
R3242	2D
R3243	2D
R3244	2D
R3246	2E
R3247	2E
R3252	2E
R3253	2E
R3254	2E
R3256	2F
R3258	2F
R3274	2G
R3275	2G
R3276	2H
R3278	2H
R3296	2I
R3299	2J
R3311	2B
R3314	3B
R3326	2C
R3328	3C
R3333	3D
R3334	3D
R3335	3D
R3353	3E
R3358	3F
R3376	3G
R3382	2H
R3384	3I
R3385	3I
R3391	3I
R3392	3I
R3422	3C
R3438	3D
R3439	3D
R3448	3E
R3449	3E
R3482	3H
R3484	3H
R3486	3I
R3487	3I
R3488	3I
R3514	4B
R3516	4B
R3521	3C
R3522	4C
R3532	4D
R3534	4D
R3536	4D
R3538	4D
R3548	4E
R3549	4E
R3558	4F
R3562	4F
R3579	4G
R3580	4H
R3582	4H
R3586	4I
R3587	4H
R3589	4I
R3590	4I
R3597	4J
R3612	4B
R3613	4B
R3616	4B
R3622	4C
R3624	4C
R3625	4C
R3626	4C
R3632	4D
R3634	4D
R3645	5E
R3647	4E
R3661	5F
R3683	4H
R3684	4H
R3685	4I
R3687	4I
R3695	4I
R3712	5B
R3714	5B
R3716	5B
R3724	5C
R3725	5C
R3735	5D
R3742	5E
R3744	5E
R3752	5E
R3753	5E
R3754	5E
R3756	5F
R3758	5F
R3774	5G
R3775	5G
R3776	5G
R3794	5I
R3798	5J
R3815	5B
R3816	5C
R3817	5C
R3825	5C
R3828	6C
R3834	5D
R3835	5D
R3838	5D
R3839	5D
R3842	5D
R3843	5D
R3849	5E
R3854	5E
R3858	6F
R3868	5G
R3876	6G
R3881	5H
R3882	6H
R3884	6H
R3885	5I
R3886	5I
R3889	5I
R3891	6I
R3893	6I
R3903	6A
R3904	6A
R3906	6B
R3914	6B
R3915	6B
R3916	6C
R3922	6C
R3924	6C
R3932	6C
R3934	6D
R3944	6E
R3946	6E
R3952	6E
R3956	6F
R3958	6F
R3959	6G
R3981	6I
R3983	6I
R3986	6I
R3987	6I
R3988	6I
R3989	6I
RT3267	2G
RT3767	5G
S3414	3B
S3995	6J
TP3319	3C
TP3519	4C
U3290	2I
U3605	4B
U3705	5B
U3790	5I
U3805	5B
U3905	6B
VR3096	2J
VR3356	3F
VR3597	4J
VR3662	5F
VR3824	5C
W3527	4C
W3732	5D

http://manoman.eghill.com

VOLTAGES AND WAVEFORM CONDITIONS

Voltages and waveforms similar to those shown on this diagram can be obtained by using the recommended test equipment and test set-ups listed below.

RECOMMENDED TEST EQUIPMENT

ITEM	SPECIFICATIONS		RECOMMENDED TYPE
OSCILLOSCOPE	Bandwidth	DC to 100 MHz	TEKTRONIX 465B Oscilloscope with P6065 or P6062B 10X probe.
	Minimum Deflection Factor	5 mV/div	
	Input Impedance	1 MΩ/20 pF	
DIGITAL MULTIMETER (For voltage up to 1 kV)	Input Impedance	10 MΩ	TEKTRONIX DM 501A.
	Range	0 to 1 kV	
DC VOLTMETER (For voltages above 1 kV)	Input Impedance	20,000 Ω/volt	TRIPLETT Model 630NA.
	Range	0 to 6 kV	

Voltages and waveforms on this diagram were obtained under the following 466 conditions, unless noted otherwise.

POWER & CRT CONTROLS

POWER	ON (pulled out)
INTENSITY	Midrange (pushed in, Full Scan)
FOCUS	Adjusted for focused trace
Storage Mode	NON STORE (pushed in)
VIEWTIME	NORM

VERTICAL CONTROLS (BOTH CHANNELS)

VOLTS/DIV	5 mV
VAR	CAL
AC-DC-GND	DC
VERT MODE	CH 1
INVERT	Out
20 MHz BW	OUT (full bandwidth)

A TRIGGER CONTROLS

A TRIGGER HOLDOFF	NORM
TRIG MODE	AUTO
COUPLING	AC
SOURCE	NORM
LEVEL	0
SLOPE	+

B TRIGGER CONTROLS

SOURCE	STARTS AFTER DELAY
COUPLING	AC
LEVEL	0
SLOPE	+

SWEEP CONTROLS

X10 MAG	Out
POSITION	Midrange
FINE	Midrange
HORIZ DISPLAY	A
DELAY TIME POSITION	0.02
A AND B TIME/DIV and DELAY TIME (Knobs Locked)	.2 ms

Signal Applied (For Waveforms Only)

20 mV positive going square wave.

http://manoman.sghill.com

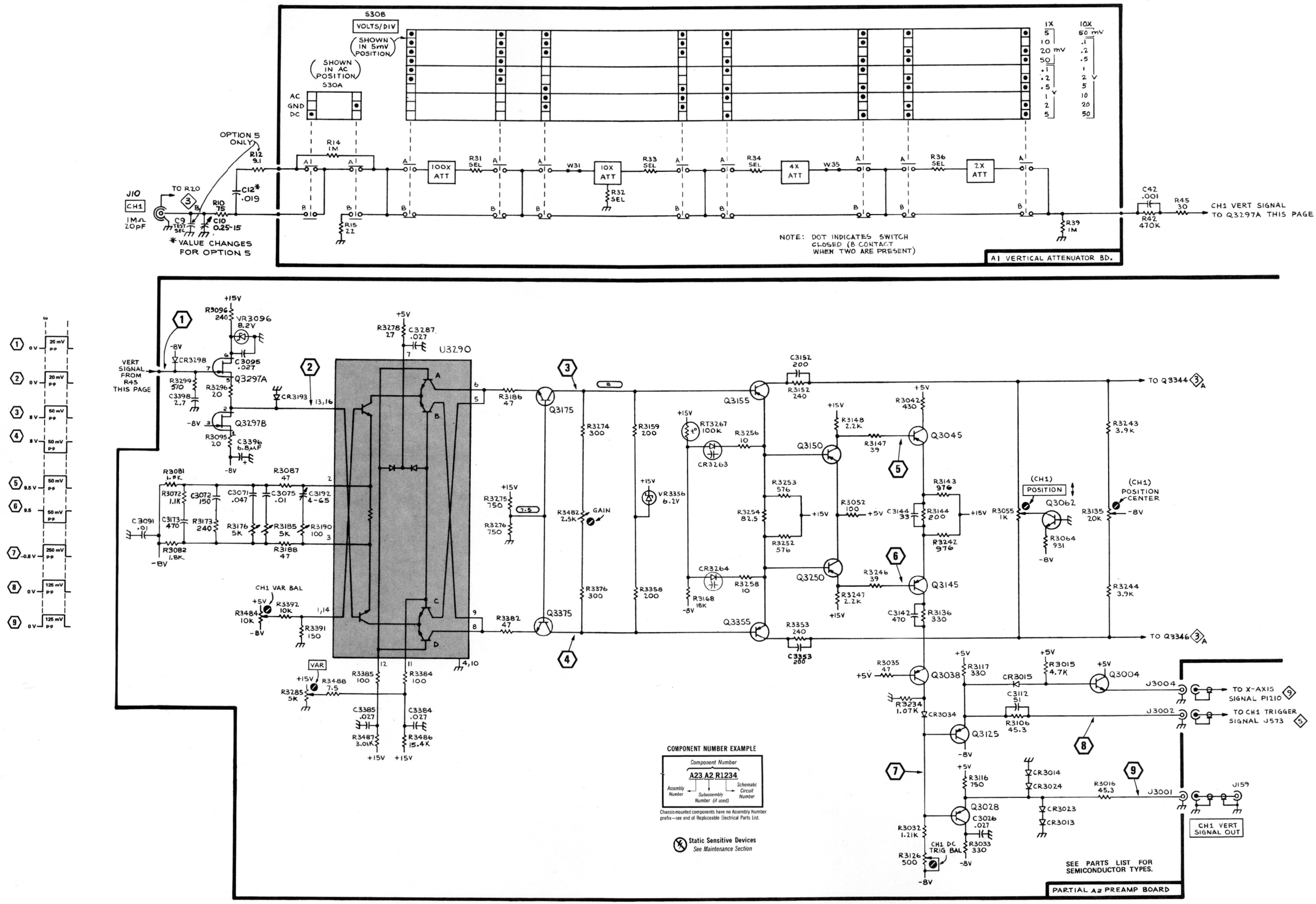

http://manoman.sqhill.com

VOLTAGES AND WAVEFORM CONDITIONS

Voltages and waveforms similar to those shown on this diagram can be obtained by using the recommended test equipment and test set-ups listed below.

RECOMMENDED TEST EQUIPMENT

ITEM	SPECIFICATIONS		RECOMMENDED TYPE
OSCILLOSCOPE	Bandwidth	DC to 100 MHz	TEKTRONIX 465B Oscilloscope with P6065 or P6062B 10X probe.
	Minimum Deflection Factor	5 mV/div	
	Input Impedance	1 MΩ/20 pF	
DIGITAL MULTIMETER (For voltage up to 1 kV)	Input Impedance	10 MΩ	TEKTRONIX DM 501A.
	Range	0 to 1 kV	
DC VOLTMETER (For voltages above 1 kV)	Input Impedance	20,000 Ω/volt	TRIPLETT Model 630NA.
	Range	0 to 6 kV	

Voltages and waveforms on this diagram were obtained under the following 466 conditions, unless noted otherwise.

POWER & CRT CONTROLS

POWER	ON (pulled out)
INTENSITY	Midrange (pushed in, Full Scan)
FOCUS	Adjusted for focused trace
Storage Mode	NON STORE (pushed in)
VIEWTIME	NORM

VERTICAL CONTROLS (BOTH CHANNELS)

VOLTS/DIV	5 mV
VAR	CAL
AC-DC-GND	DC
VERT MODE	CH 2
INVERT	Out
20 MHz BW	OUT (full bandwidth)

A TRIGGER CONTROLS

A TRIGGER HOLDOFF	NORM
TRIG MODE	AUTO
COUPLING	AC
SOURCE	NORM
LEVEL	0
SLOPE	+

B TRIGGER CONTROLS

SOURCE	STARTS AFTER DELAY
COUPLING	AC
LEVEL	0
SLOPE	+

SWEEP CONTROLS

X10 MAG	Out
POSITION	Midrange
FINE	Midrange
HORIZ DISPLAY	A
DELAY TIME POSITION	0.02
A AND B TIME/DIV and DELAY TIME (Knobs Locked)	.2 ms

Signal Applied (For Waveforms Only)

20 mV positive going square wave.

http://manoman.sqhill.com

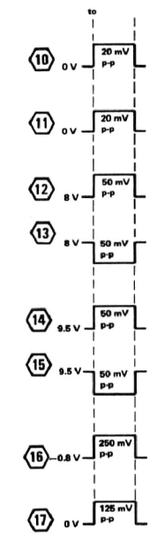

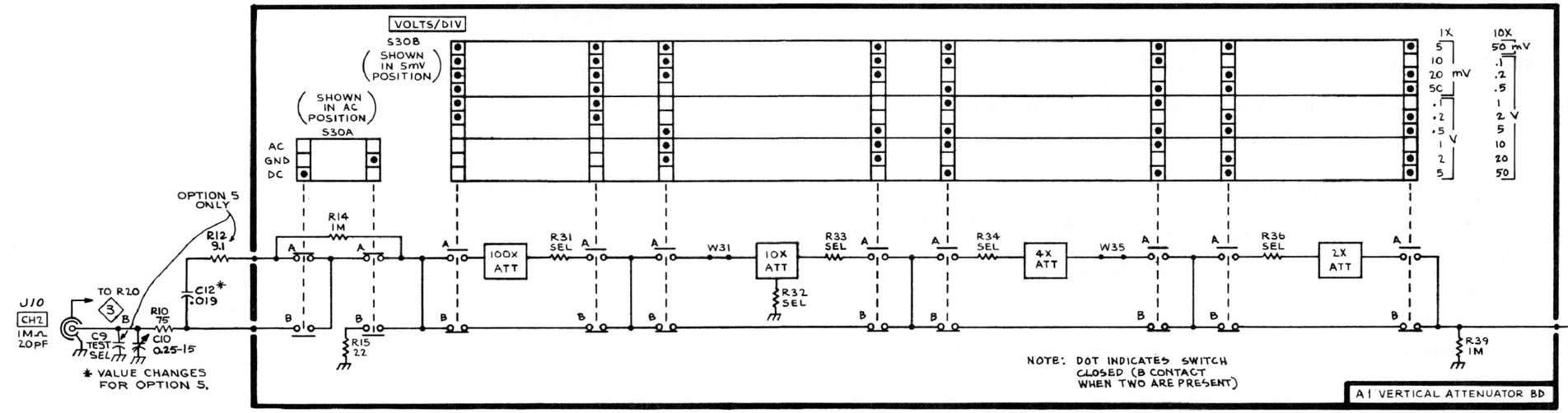

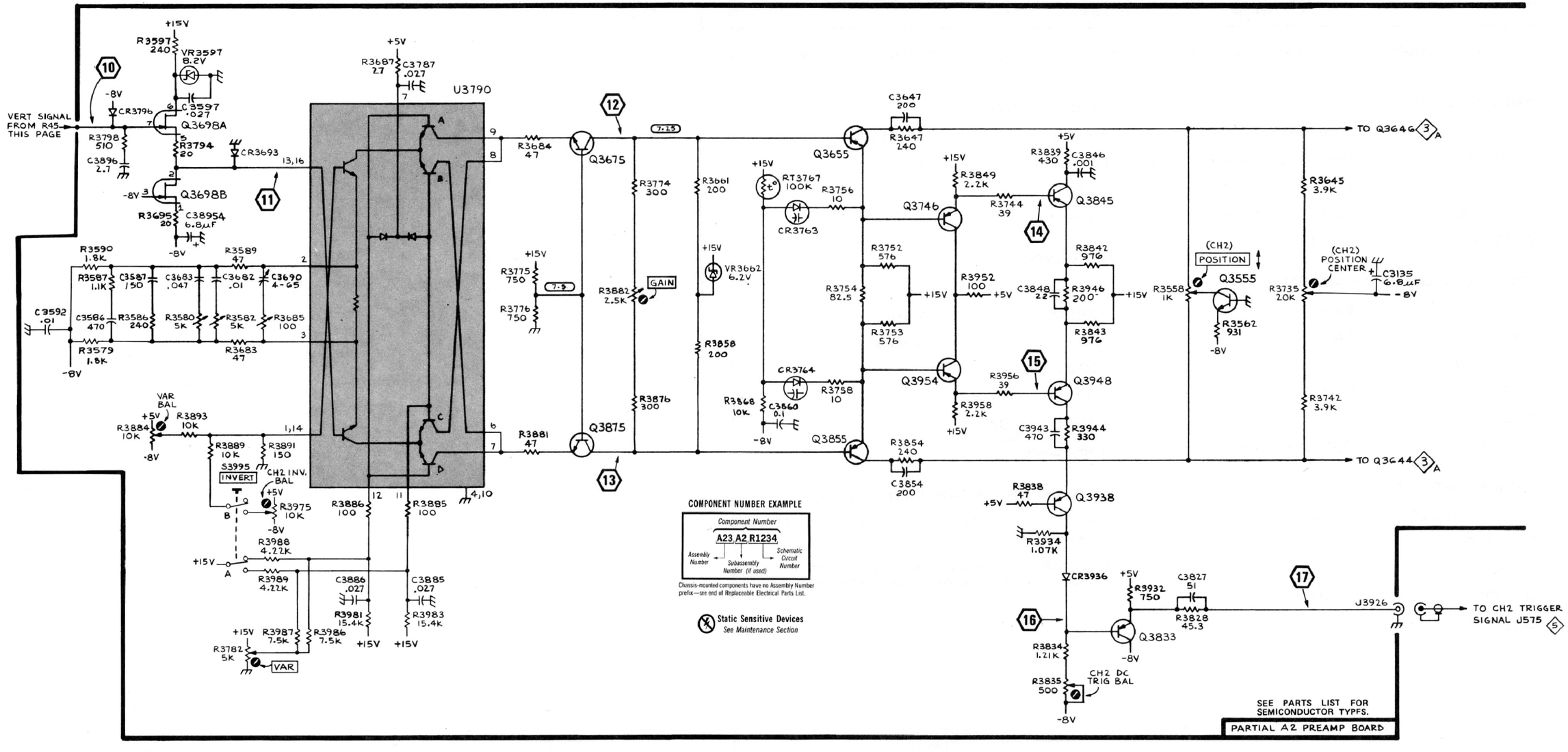

(1753-113) 4796-12
REV JUL 1984

CH2 VERTICAL PREAMP 2

http://manoman.sqhill.com

VOLTAGES AND WAVEFORM CONDITIONS

Voltages and waveforms similar to those shown on this diagram can be obtained by using the recommended test equipment and test set-ups listed below.

RECOMMENDED TEST EQUIPMENT

ITEM	SPECIFICATIONS		RECOMMENDED TYPE
OSCILLOSCOPE	Bandwidth	DC to 100 MHz	TEKTRONIX 465B Oscilloscope with P6066B 10X probe.
	Minimum Deflection Factor	5 mV/div	
	Input Impedance	1 MΩ/20 pF	
DIGITAL MULTIMETER (For voltage up to 1 kV)	Input Impedance	10 MΩ	TEKTRONIX DM 501A.
	Range	0 to 1 kV	
DC VOLTMETER (For voltages above 1 kV)	Input Impedance	20,000 Ω/volt	TRIPLETT Model 630NA.
	Range	0 to 6 kV	

Voltages and waveforms on this diagram were obtained under the following 466 conditions, unless noted otherwise.

POWER & CRT CONTROLS

POWER	ON (pulled out)
INTENSITY	Midrange (pushed in, Full Scan)
FOCUS	Adjusted for focused trace
Storage Mode	NON STORE (pushed in)
VIEWTIME	NORM

VERTICAL CONTROLS (BOTH CHANNELS)

VOLTS/DIV	5 mV
VAR	CAL
AC-DC-GND	DC
VERT MODE	CH 1
INVERT	Out
20 MHz BW	OUT (full bandwidth)

A TRIGGER CONTROLS

A TRIGGER HOLDOFF	NORM
TRIG MODE	AUTO
COUPLING	AC
SOURCE	NORM
LEVEL	0
SLOPE	+

B TRIGGER CONTROLS

SOURCE	STARTS AFTER DELAY
COUPLING	AC
LEVEL	0
SLOPE	+

SWEEP CONTROLS

X10 MAG	Out
POSITION	Midrange
FINE	Midrange
HORIZ DISPLAY	A
DELAY TIME POSITION	0.02
A AND B TIME/DIV and DELAY TIME (Knobs Locked)	.2 ms

Signal Applied (For Waveforms Only)

The 466 Calibrator signal is applied to the CH 1 input through a compensated 10X probe.

Test Oscilloscope Vertical input is ac coupled unless noted otherwise by a 0 volt reference on the waveform drawing.

REV JUL 1984

http://manoman.sqhill.com

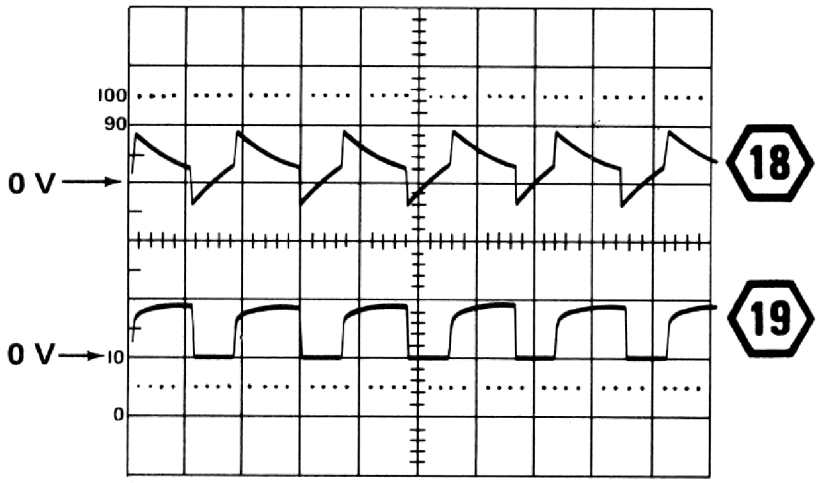

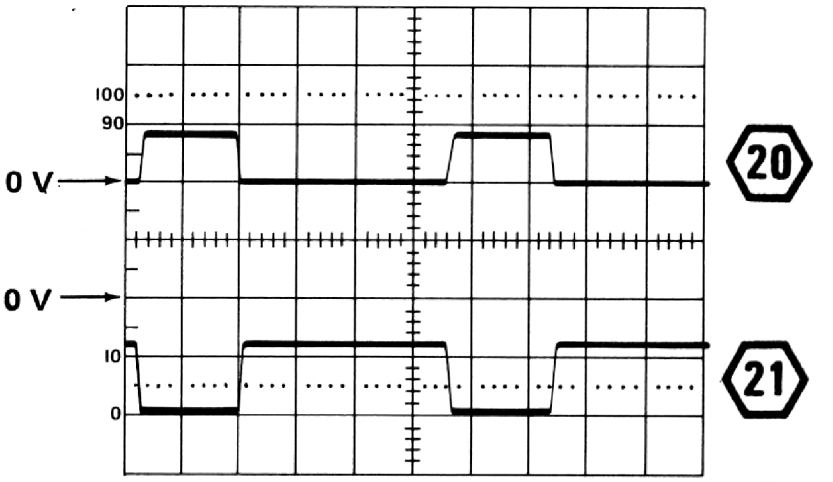

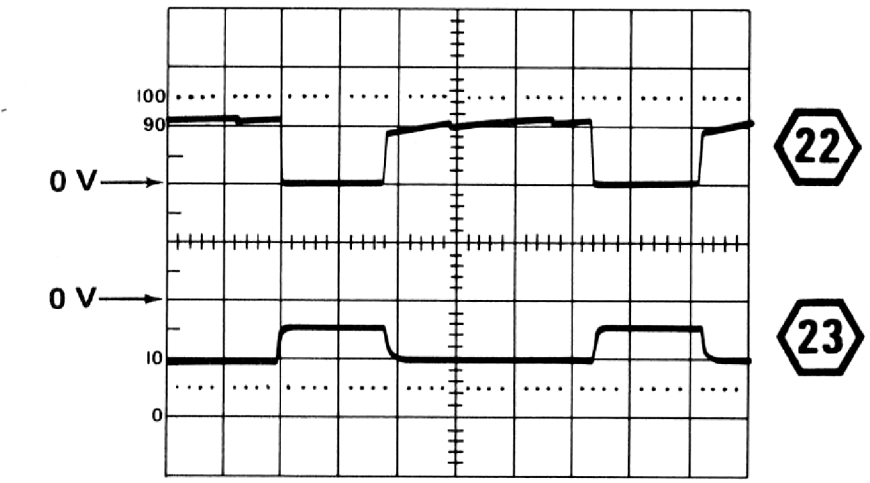

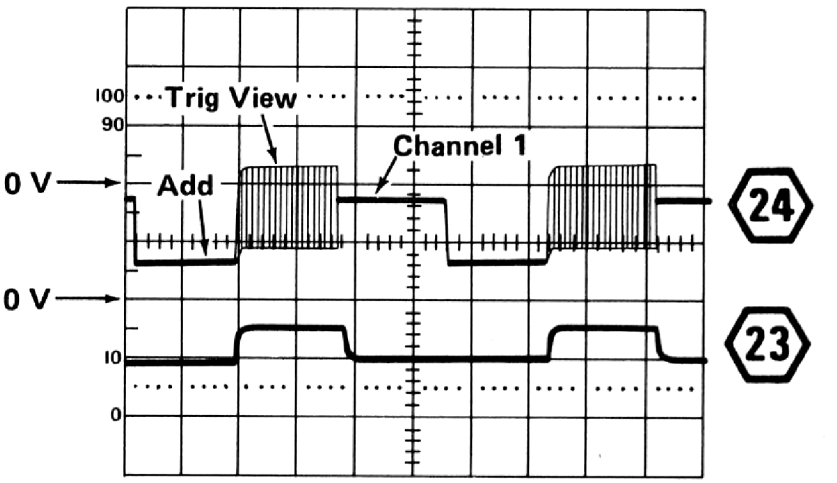

Trigger View pressed in.
With signal applied.

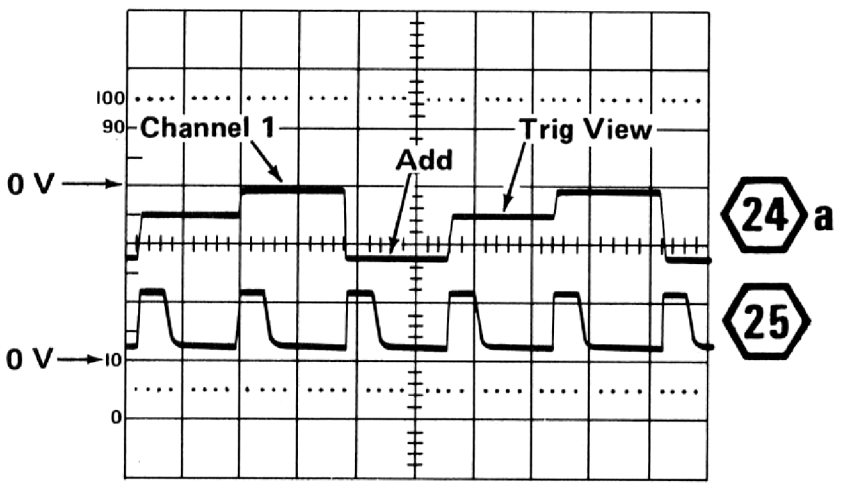

Trigger View pressed in.
No signal applied to external input.

http://manoman.sqhill.com

PARTIAL A5 TRIGGER GENERATOR & SWEEP LOGIC BOARD

NOTE: SHOWN IN CH1 POSITION

PARTIAL S610 SOURCE: NORM, CH1, CH2, LINE, EXT, EXT÷10

PARTIAL A3 VERTICAL MODE SWITCH BOARD

CH 1 VERT SIG FROM R3152 — C3342 2-22 — CH1 HF COMP R3355 1K — L3245 .09µH — Q3344 — Q3346 — CH 1 VERT SIG FROM R3353

R3449 750 — R3448 510 — +5V

CR3445 — CR3447 — CR3443 — CR3441

J3224 −TRIG VIEW FROM J688 (5) — C5048 0.1µF — P3505 — P5001 — TRIG VIEW ENABLE — R3232 43 — Q3235 — C3517 .01µF — CR3327 — R3334 820 — C3334 .01µF — R3233 5.1K — R3333 820 — R3438 3.0K — R3439 3.0K — CR3438 — CR3432 — CR3434 — CR3436

J3320 +TRIG VIEW FROM J678 (5) — R3326 43 — Q3226

TO (3) P500 5-1 — P500 — P5005 — +15V FROM INTERFACE BOARD (11) — PARTIAL TRIG VIEW S350

CH 2 VERT SIG FROM R3647 — L3642 .09µH — CH2 HF COMP R3634 1K — C3643 2-22 — Q3646 — Q3644 — CH 2 VERT SIG FROM R3854

R3548 750 — R3549 510 — +5V

CR3545 — CR3547 — CR3543 — CR3541

P3505 — PIN 5 CH1 SELECT (+5.0) — PIN 3 CH2 SELECT (0V) — PIN 2 ADD SELECT (0V) — PIN 1 TRIG VIEW SELECT (0V) — PIN 4 XY SELECT — P5001 (3) B

U3605 6201 — A3 A4 A5 A6 A7 A2 A1 A0 — O1 O2 O3 O4 — E1 E2

U3705 74LS175 — D0 D1 D2 CLK — Q0 Q1 Q2 Q̄2

U3805 74LS08 — U3905 74LS00 — +5V

POSITIVE EDGE CLOCKS FLIP-FLOPS

U3805D 74LS08 — R3922 1K — R3924 1.2K — VR3824 3.1V — Q3636 — R3825 1K — C3822 47 — -8V DURING "ADD" — (20) — (21)

LOW FOR CH1 — R3616 7.5K — C3615 100 — Q3619 — R3625 365 — R3626 316 — C3723 100

LOW FOR CH2 — R3714 7.5K — C3714 100 — Q3719 — R3725 365 — R3724 316 — C3726 100

LOW FOR TRIG VIEW — R3612 7.5K — C3611 100 — Q3617 — R3622 365 — R3624 316 — C3623 100 — (22) — (23)

R3712 10K — R3716 10K — R3613 10K — -8V — +5V

CR3727 — CR3529 — CR3818 — R3817 3K — R3816 3K

P3920 — DM44 (ONLY) TO P3201-1 (3) DM44 MANUAL

+15V — NORM TRIG DC BAL R3202 500 — R3205 1.37K — Q3118 — C3119 6.8µF — R3208 412 — R3207 270 — Q3215 — R3311 31.6 — R3206 681 — R3108 200 — R3216 510 — CR3312 — (24)

COMP TRIG — R3107 49.9 — J3101 ≈25mV/DIV NORM TRIG SIG TO J571 (5)

25mV/DIV — DL339 DELAY LINE — VERT SIG TO (4) — 50mV/DIV (DIFFERENTIAL)

L3412 0.3µH — BW LIMIT S3414 — (PUSH) — 4R — 5R — L3512 0.3µH

R3422 75 — C3422 470 TP3319 — R3314 46.4 — R3328 200 — Q3426 — R3532 845 — R3538 237 — C3832 6.8µF — R3632 124 — R3536 237 — R3534 845 — Q3428 — TP3519 — R3522 200 — R3521 75 — C3521 470 — R3514 46.4 — R3516 464

C3306 21 — C3405 170 — 4L 6L 5L — 2L 1L 3L

S3414 — NOTE: S3414 AS VIEWED FROM COMPONENT SIDE OF BOARD.

COMPONENT NUMBER EXAMPLE: Component Number A23 A2 R1234 — Assembly Number — Subassembly Number (if used) — Schematic Circuit Number

Chassis-mounted components have no Assembly Number prefix—see end of Replaceable Electrical Parts List.

Static Sensitive Devices See Maintenance Section

U3805B 74LS08 — U3905B 74LS00 — R3903 1.1K — R3904 220 — C3804 390 — U3805A 74LS08 — U3905A 74LS00 — U3805C 74LS08 — U3905C 74LS00 — U3905D 74LS00 — (18) — (19)

HIGH WHEN TWO OR MORE CHANNELS ARE SELECTED

ALT/CHOP SELECT FROM P5001-6 (3) B — P3505 — LOW FOR CHOPPED — HIGH ENABLES CHOPPED CLOCK AND CHOPPED BLANKING

LOW TRANSITION BLANKS CRT — R3916 470 — CR3918 — C3912 6.8µF — C3813 200 — R3815 1K — Q3812 — (25) — R3914 1.2K — R3915 10K

J3902 CHOPPED BLANKING TO CR1411 (10)

P3920 — DM44 (ONLY) TO P3215-1 (3) DM44 MANUAL — DM44 (ONLY) TO P3201-2

VERT ALT SYNC PULSE FROM J919 (5) — J3901 — C3911 .01µF — HIGH PULSE AT END OF SWP WHEN IN ALT — LOW DURING SWP HIGH PULSE AT END OF SWP

R3906 20K — C3906 100

PARTIAL A2 PREAMP BOARD

(1753-116) 4796-18
REV JUL 1984

VERTICAL SWITCHING LOGIC (3) A

http://manoman.sghill.com

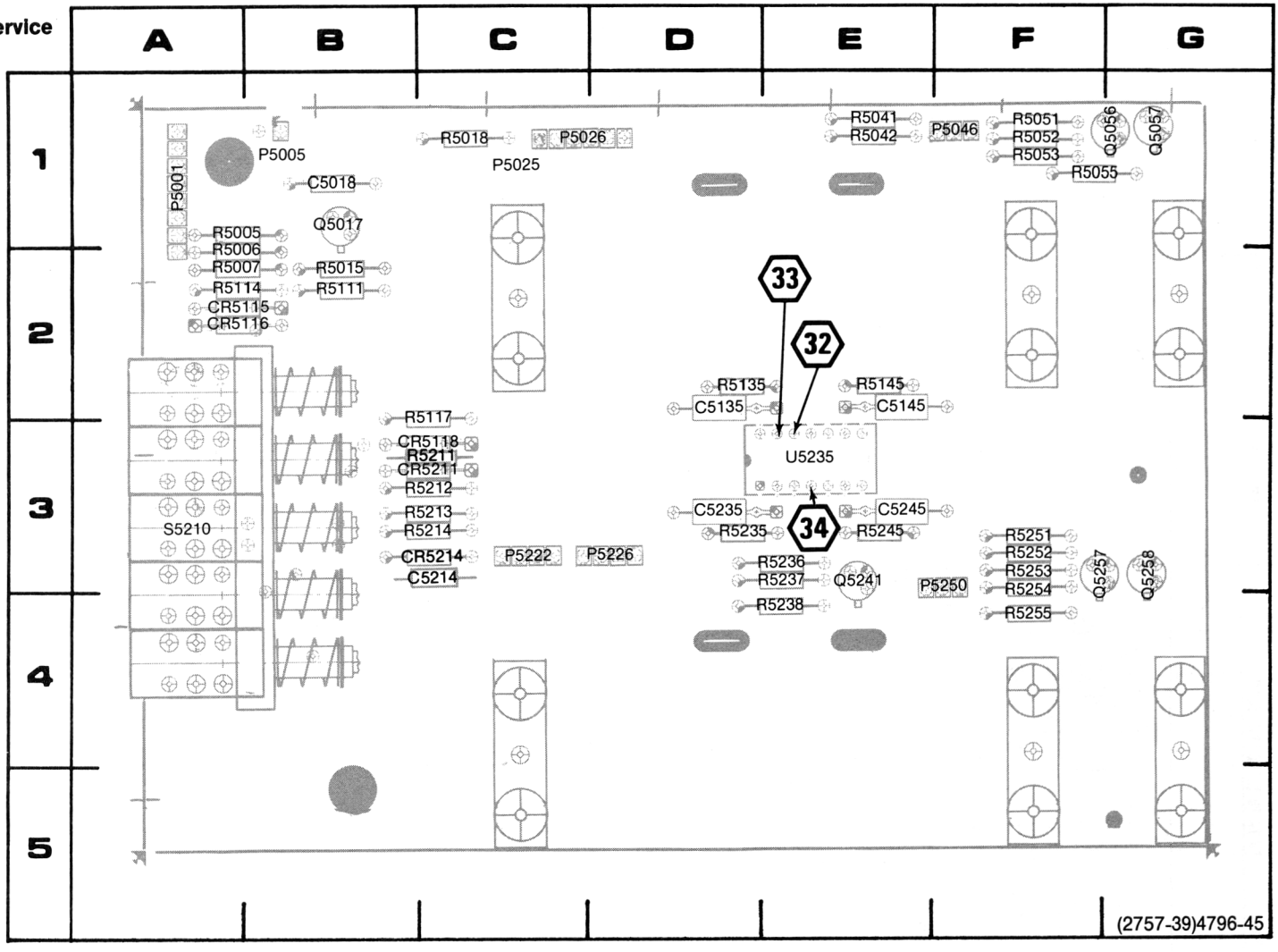

Figure 7-5. A3—Vertical Mode Switch Board.

REV JUL 1984

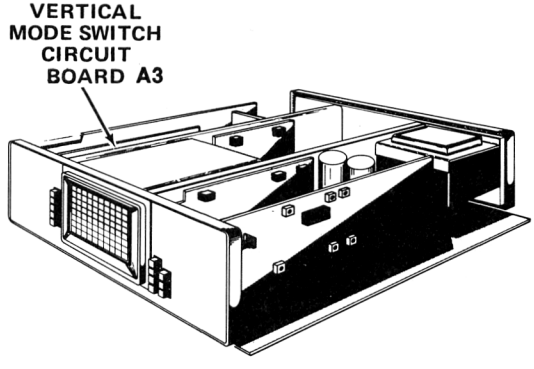

http://manoman.sqhill.com

CKT NO	GRID LOC	CKT NO	GRIC LOC	CKT NO	GRID LOC
C5018	1B	Q5017	1B	R5117	2C
C5135	2D	Q5056	1G	R5135	2D
C5145	2E	Q5057	1G	R5145	2E
C5214	3C	Q5241	3E	R5211	3C
C5235	3D	Q5257	3F	R5212	3C
C5245	3E	Q5258	3G	R5213	3C
CR5115	2A	R5005	1A	R5214	3C
CR5116	2A	R5006	1A	R5235	3D
CR5118	3C	R5007	2A	R5236	3E
CR5211	3C	R5015	2B	R5237	3E
CR5214	3C	R5018	1C	R5238	4E
P5001	1A	R5041	1E	R5245	3E
P5005	1B	R5042	1E	R5251	3F
P5025	1C	R5051	1F	R5252	3F
P5026	1C	R5052	1F	R5253	3F
P5046	1F	R5053	1F	R5254	3F
P5222	3C	R5055	1F	R5255	4F
P5226	3D	R5111	2B	U5235	3E
P5250	3F	R5114	2A	S5210	3A

http://manoman.sqhill.com

VOLTAGES AND WAVEFORM CONDITIONS

Voltages and waveforms similar to those shown on this diagram can be obtained by using the recommended test equipment and test set-ups listed below.

RECOMMENDED TEST EQUIPMENT

ITEM	SPECIFICATIONS		RECOMMENDED TYPE
OSCILLOSCOPE	Bandwidth	DC to 100 MHz	TEKTRONIX 465B Oscilloscope with P6065 or P6062B 10X probe.
	Minimum Deflection Factor	5 mV/div	
	Input Impedance	1 MΩ/20 pF	
DIGITAL MULTIMETER (For voltage up to 1 kV)	Input Impedance	10 MΩ	TEKTRONIX DM 501A.
	Range	0 to 1 kV	
DC VOLTMETER (For voltages above 1 kV)	Input Impedance	20,000 Ω/volt	TRIPLETT Model 630NA.
	Range	0 to 6 kV	

Voltages and waveforms on this diagram were obtained under the following 466 conditions, unless noted otherwise.

POWER & CRT CONTROLS

POWER	ON (pulled out)
INTENSITY	Midrange (pushed in, Full Scan)
FOCUS	Adjusted for focused trace
Storage Mode	NON STORE (pushed in)
VIEWTIME	NORM

VERTICAL CONTROLS (BOTH CHANNELS)

VOLTS/DIV	5 mV
VAR	CAL
AC-DC-GND	DC
VERT MODE	CH 1
INVERT	Out
20 MHz BW	OUT (full bandwidth)

A TRIGGER CONTROLS

A TRIGGER HOLDOFF	NORM
TRIG MODE	AUTO
COUPLING	AC
SOURCE	NORM
LEVEL	0
SLOPE	+

B TRIGGER CONTROLS

SOURCE	STARTS AFTER DELAY
COUPLING	AC
LEVEL	0
SLOPE	+

SWEEP CONTROLS

X10 MAG	Out
POSITION	Midrange
FINE	Midrange
HORIZ DISPLAY	A
DELAY TIME POSITION	0.02
A AND B TIME/DIV and DELAY TIME (Knobs Locked)	.2 ms

Signal Applied (For Waveforms Only)

The 466 Calibrator signal is applied to the CH 1 input through a compensated 10X probe.

Test Oscilloscope Vertical input is ac coupled unless noted otherwise by a 0 volt reference on the waveform drawing.

http://manoman.sqhill.com

466 CONTROL SETTINGS

DC Voltages

A TRIG MODE	NORM (sweep not triggered)
VERT MODE	CH 1 and CHOP
AC-GND-DC (both)	GND

AC Waveforms

A TRIG MODE	AUTO (no trigger signal)
A and B TIME/DIV	1 ms
AC-GND-DC (both)	GND

H = HI logic level >2 vdc
L = LO logic level <0.8 vdc

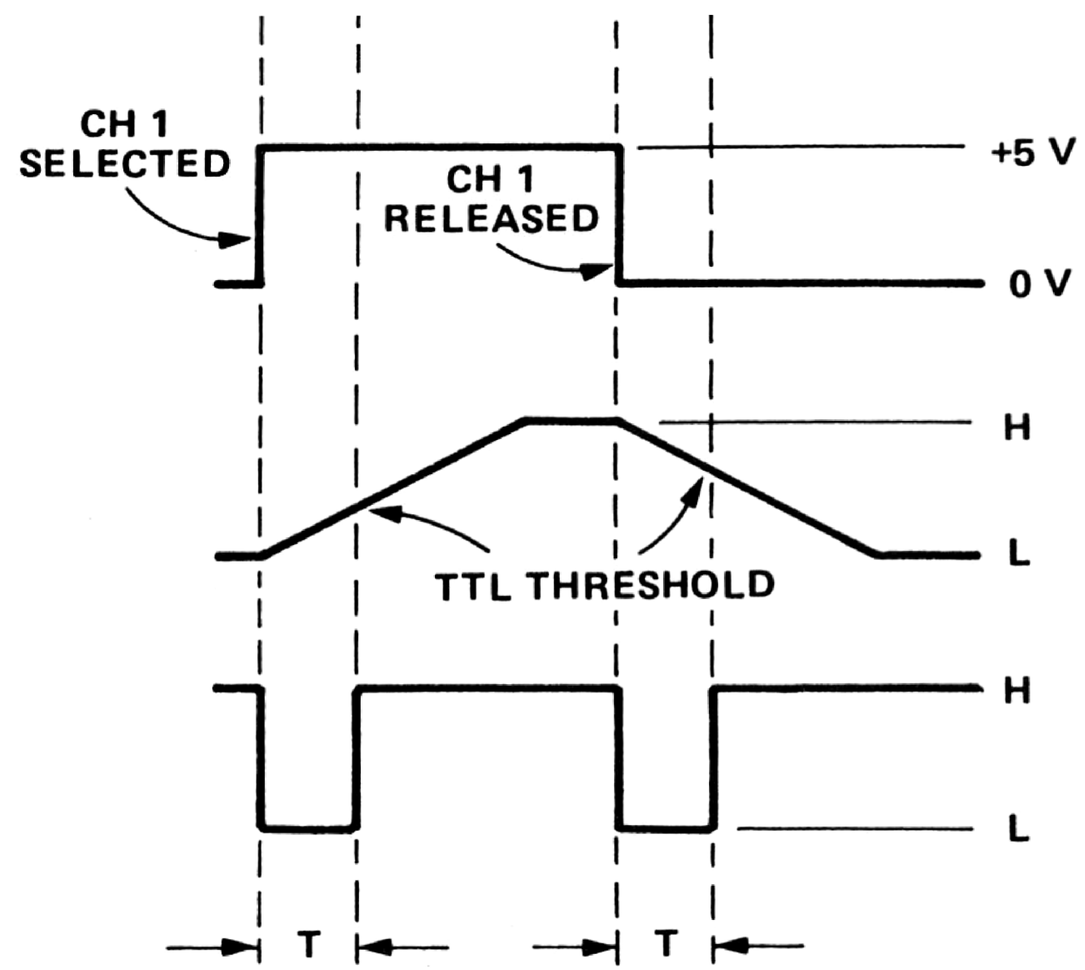

NEGATIVE TRANSITION OCCURS WHEN CH 1, TRIG VIEW, ADD, OR CH 2 BUTTONS ARE PRESSED OR RELEASED.

http://manoman.sghill.com

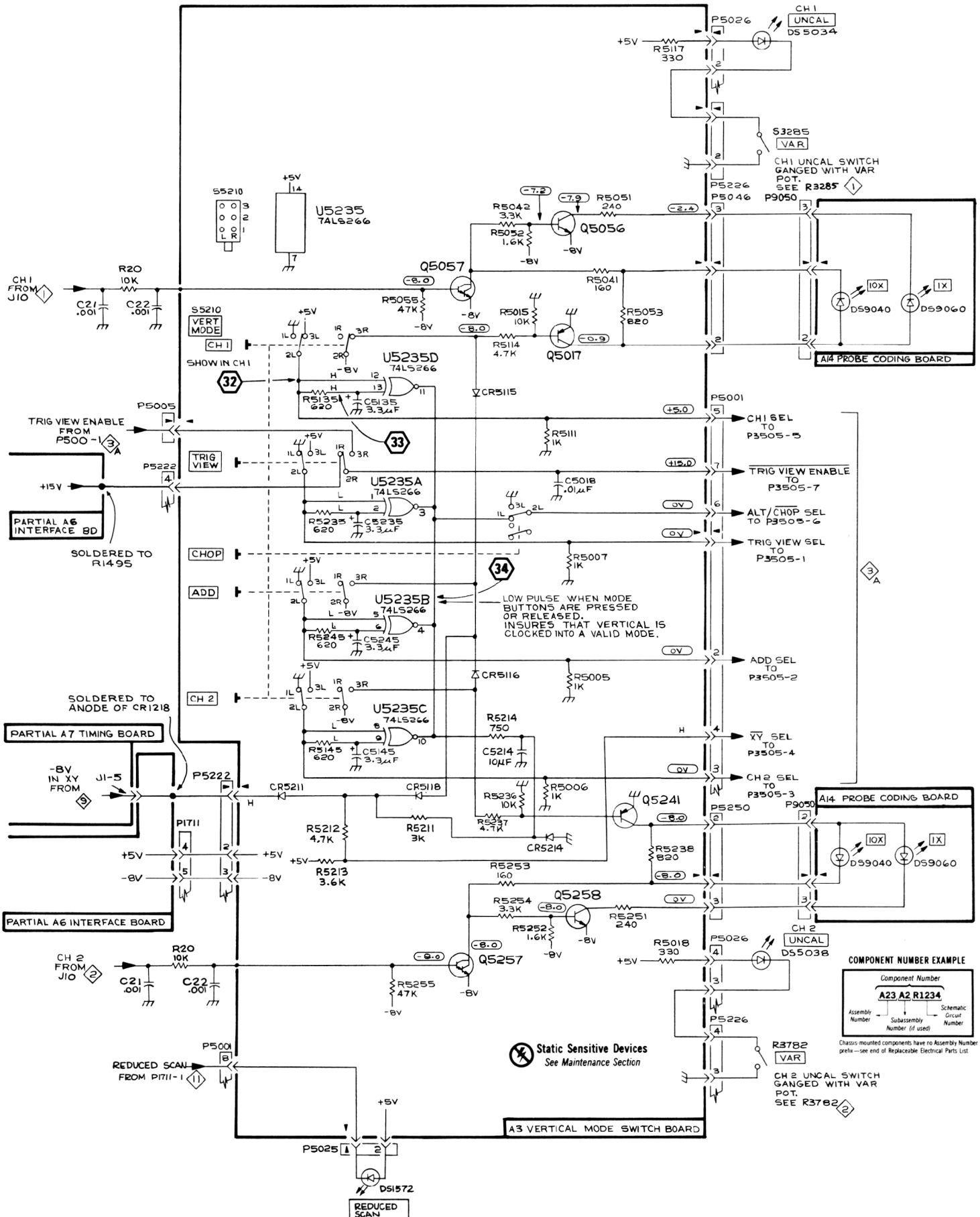

(2157-78)(4273-14) 4796-14

VERTICAL MODE SWITCH (3B)

http://manoman.sqhill.com

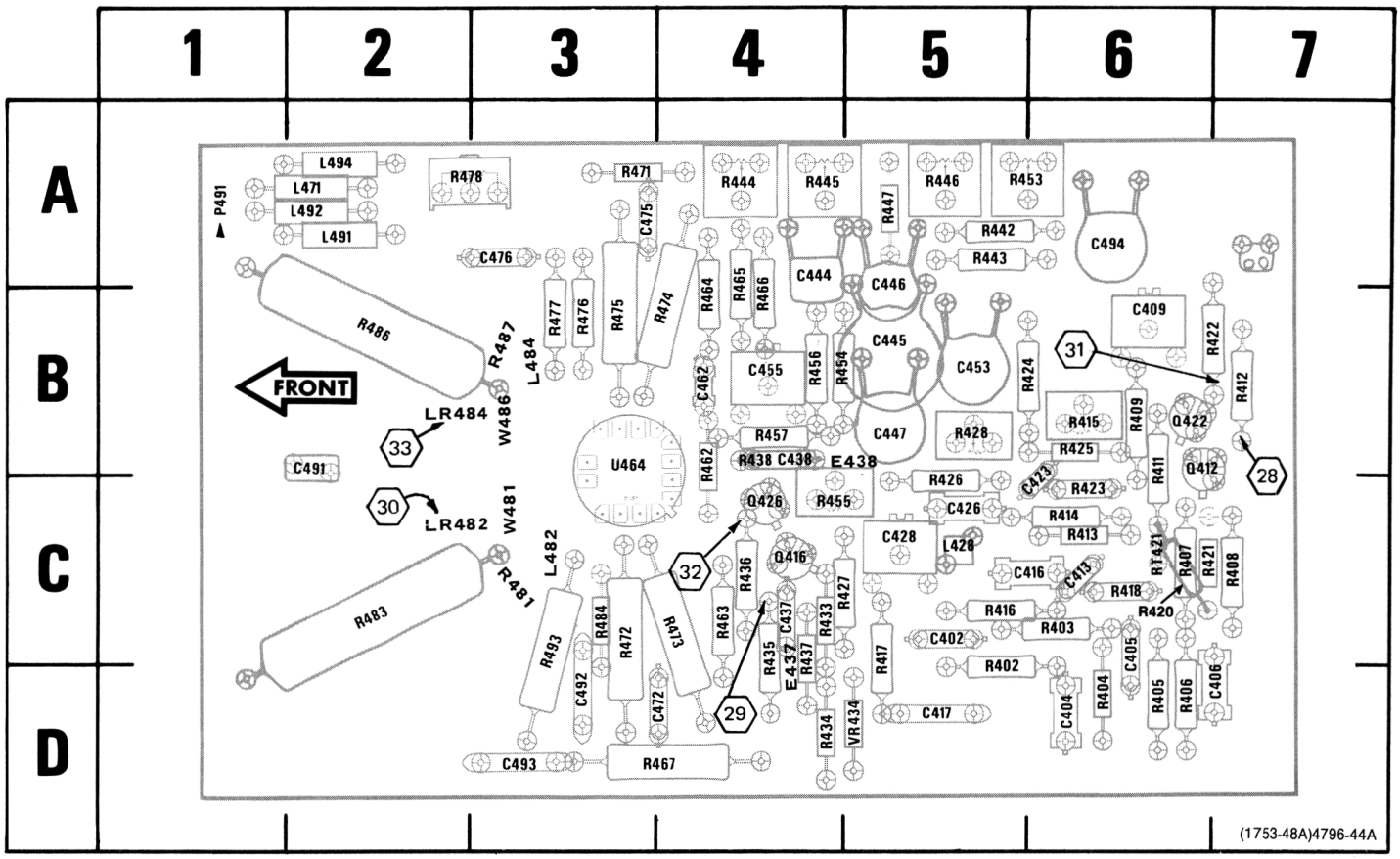

Figure 7-6. A4—Vertical Output Amplifier Bd.

CKT NO	GRID LOC	CKT NO	GRID LOC	CKT NO	GRID LOC	CKT NO	GRID LOC	CKT NO	GRID LOC
C402	5C	C493	3D	R402	5D	R435	4C	R475	3B
C404	6D	C494	6A	R403	6C	R436	4C	R476	3B
C405	6C			R404	6D	R437	4C	R477	3B
C406	7D	E437	4D	R405	6D	R438	4B	R478	2A
C409	6B	E438	5B	R406	6D	R442	5A	R481	3C
C413	6C			R407	6C	R443	5A	R482	3C
C416	6C			R408	7C	R444	4A	R483	2C
C417	5D	L428	5C	R409	6B	R445	4A	R484	3C
C423	6C	L471	2A	R411	6B	R446	5A	R485	3B
C426	5C	L483	3C	R412	7B	R447	5A	R486	2B
C428	5C	L486	3B	R413	6C	R453	5A	R487	3B
C437	4C	L491	2A	R414	6C	R454	4B	R493	3C
C438	4B	L492	2A	R415	6B	R455	4C		
C444	4A	L494	2A	R416	5C	R456	4B	RT421	6C
C445	5B			R417	5C	R457	4B		
C446	5A	LR482	3C	R418	6C	R462	4B	U464	3B
C447	5B	LR484	2B	R421	6C	R463	4C		
C453	5B			R422	6B	R464	4B	VR434	5D
C455	4B	P491	1A	R423	6C	R465	4A		
C462	4B			R424	5B	R466	4B		
C472	4D	Q412	6B	R425	6B	R467	4D		
C475	3A	Q416	4C	R426	5C	R471	3A	W481	3C
C476	3A	Q422	6B	R427	4C	R472	3C	W486	3B
C491	2B	Q426	4C	R428	5B	R473	4C		
C492	3D			R433	4C	R474	4B		
				R434	4D				

http://manoman.sqhill.com

VERTICAL OUTPUT AMPLIFIER A4

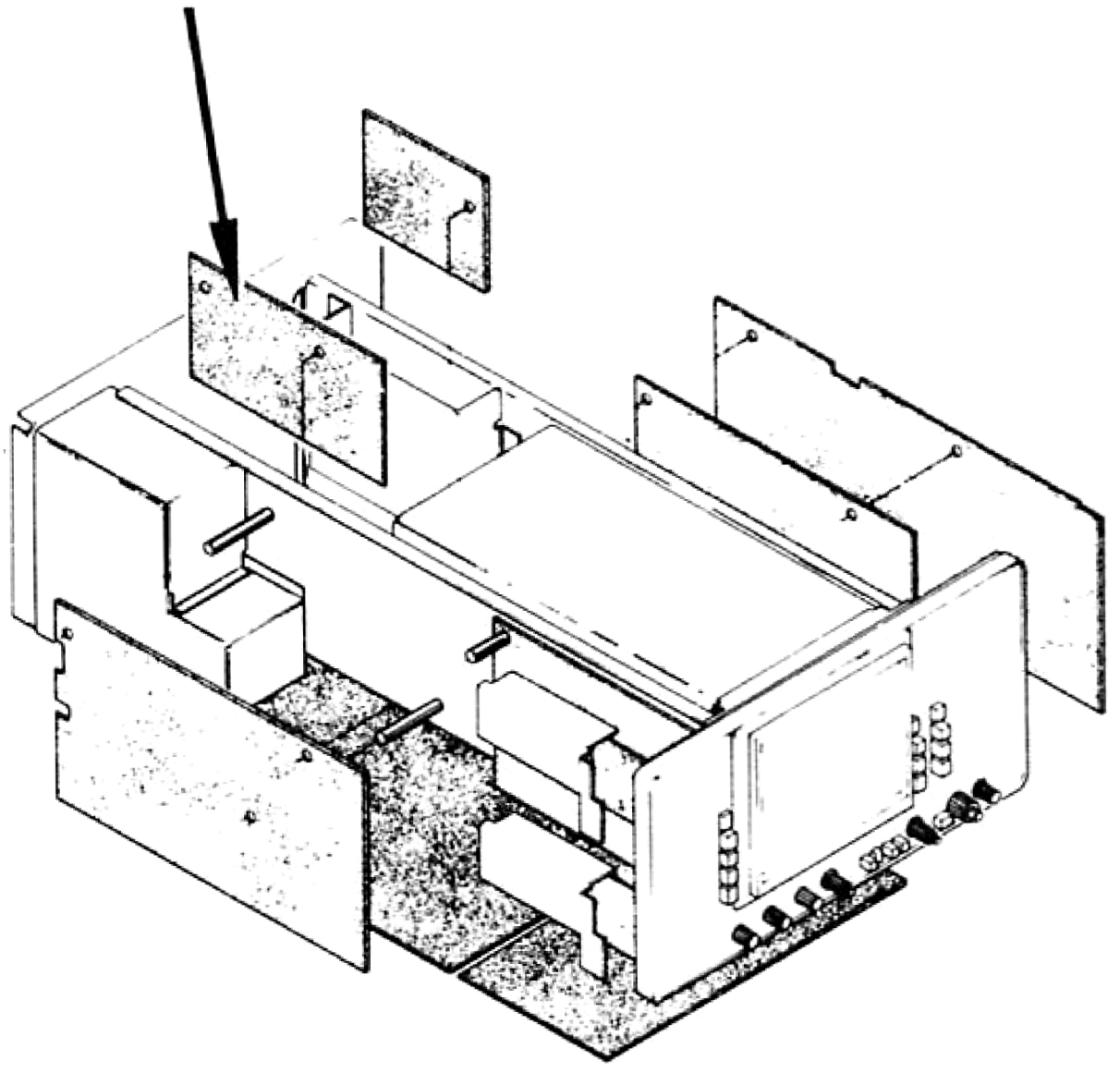

http://manoman.sqhill.com

VOLTAGES AND WAVEFORM CONDITIONS

Voltages and waveforms similar to those shown on this diagram can be obtained by using the recommended test equipment and test set-ups listed below.

RECOMMENDED TEST EQUIPMENT

ITEM	SPECIFICATIONS		RECOMMENDED TYPE
OSCILLOSCOPE	Bandwidth	DC to 100 MHz	TEKTRONIX 465B Oscilloscope with P6065 or P6062B 10X probe.
	Minimum Deflection Factor	5 mV/div	
	Input Impedance	1 MΩ/20 pF	
DIGITAL MULTIMETER (For voltage up to 1 kV)	Input Impedance	10 MΩ	TEKTRONIX DM 501A.
	Range	0 to 1 kV	
DC VOLTMETER (For voltages above 1 kV)	Input Impedance	20,000 Ω/volt	TRIPLETT Model 630NA.
	Range	0 to 6 kV	

Voltages and waveforms on this diagram were obtained under the following 466 conditions, unless noted otherwise.

POWER & CRT CONTROLS

POWER	ON (pulled out)
INTENSITY	Midrange (pushed in, Full Scan)
FOCUS	Adjusted for focused trace
Storage Mode	NON STORE (pushed in)
VIEWTIME	NORM

VERTICAL CONTROLS (BOTH CHANNELS)

VOLTS/DIV	5 mV
VAR	CAL
AC-DC-GND	DC
VERT MODE	CH 1
INVERT	Out
20 MHz BW	OUT (full bandwidth)

A TRIGGER CONTROLS

A TRIGGER HOLDOFF	NORM
TRIG MODE	AUTO
COUPLING	AC
SOURCE	NORM
LEVEL	0
SLOPE	+

B TRIGGER CONTROLS

SOURCE	STARTS AFTER DELAY
COUPLING	AC
LEVEL	0
SLOPE	+

SWEEP CONTROLS

X10 MAG	Out
POSITION	Midrange
FINE	Midrange
HORIZ DISPLAY	A
DELAY TIME POSITION	0.02
A AND B TIME/DIV and DELAY TIME (Knobs Locked)	.2 ms

Signal Applied (For Waveforms Only)

The 466 Calibrator signal is applied to the CH 1 input through a compensated 10X probe.

Test Oscilloscope Vertical input is ac coupled unless noted otherwise by a 0 volt reference on the waveform drawing.

http://manoman.sqhill.com

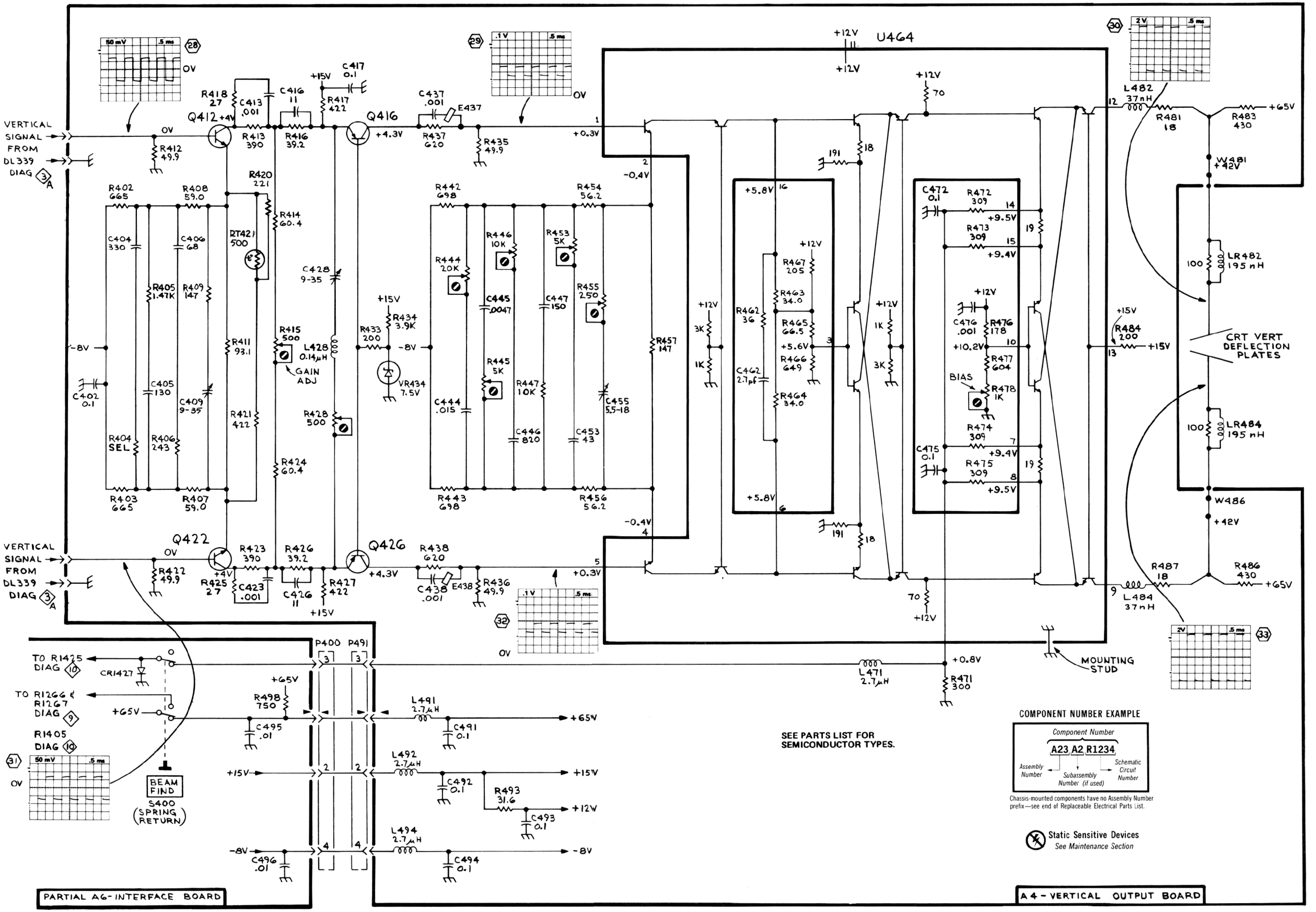

466

VERTICAL OUTPUT AMPLIFIER 4

(1753-85) 4796-15
REV JUL 1984

http://manoman.sqhill.com

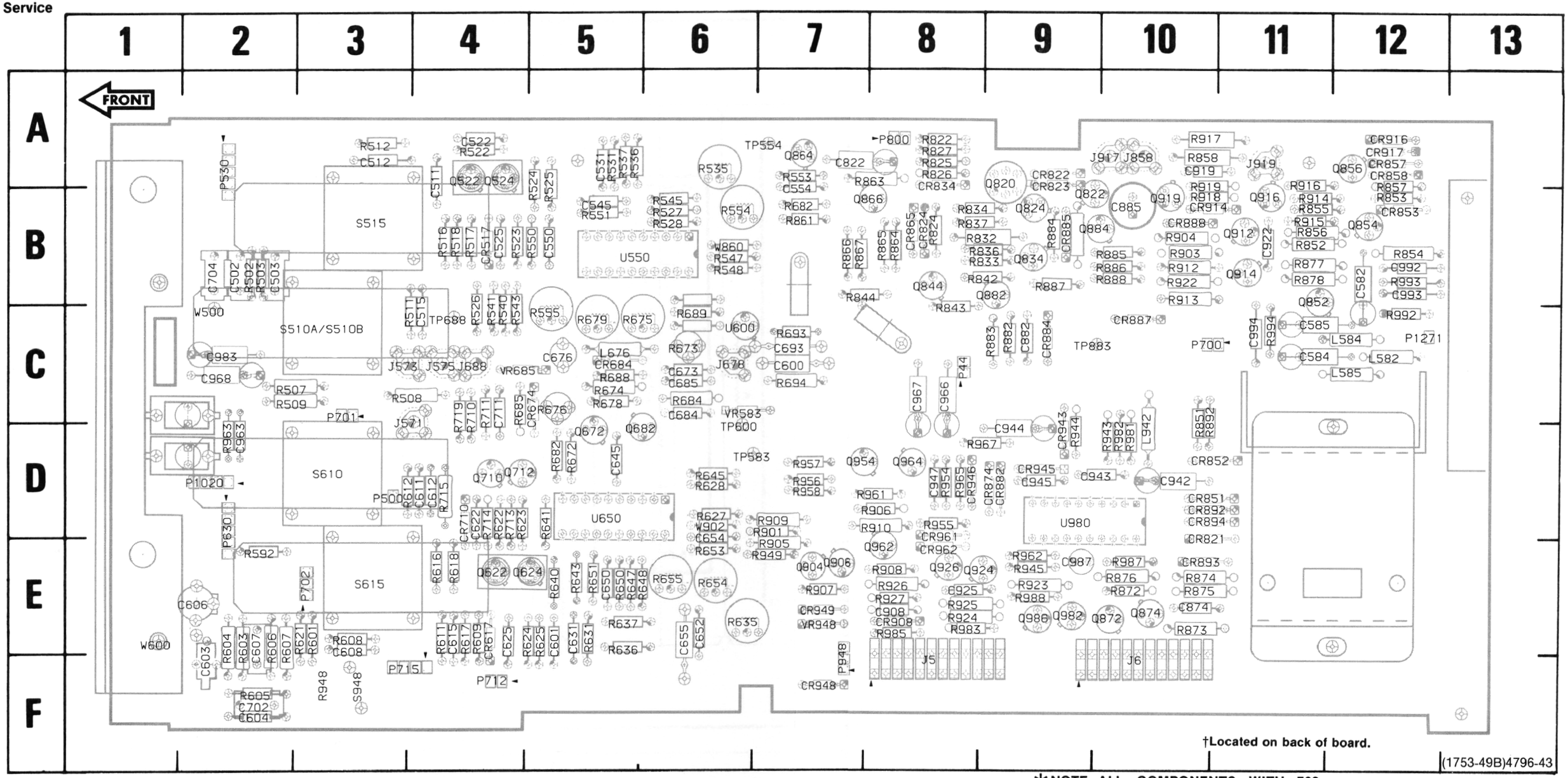

†Located on back of board.

(1753-49B)4796-43

✱NOTE: ALL COMPONENTS WITH 700 CIRCUIT NUMBERS, OPTION 5 ONLY.

Figure 7-7. A5—Trigger Generator and Sweep Logic Board.

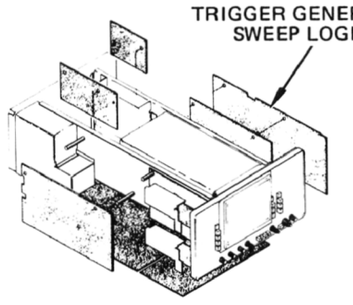

http://manoman.sqhill.com

CKT NO	GRID LOC
C502	2B
C503	2B
C511	4A
C511	4B
C512	3A
C515	4C
C522	4A
C525	4B
C531	5A
C545	5B
C550	5B
C554	7B
C582	12B
C584	11C
C585	11C
C600	7C
C601	5E
C603	2F
C604	2F
C606	2E
C607	2E
C608	3E
C611	4D
C612	4D
C615	4E
C622	4D
C625	4E
C631	5E
C650	5E
C652	6E
C654	6E
C655	6E
C673	6C
C676	5C
C684	6C
C685	6C
C693	7C
C696	8C
C697	8C
C702*	2F
C704*	2B
C711*	4C
C822	7A
C874	10E
C885	10B
C908	8E
C919	10A
C922	11B
C925	8E
C942	10D
C943	9D
C944	9D
C945	9D
C947	8D
C963	2D
C967	8C
C968	2C
C983	2C
C987	9E
C992	12B
C993	12B
C994	11C
CR517	4B
CR617	4E
CR674	5C
CR684	5C
CR710*	4D
CR821	10E
CR824	8B
CR834	8A
CR851	10D
CR852	10D
CR853	12B
CR857	12A
CR858	12A
CR865	8B
CR884	9C
CR885	9B
CR887	10C
CR888	10B
CR892	10D
CR893	10E
CR894	10D
CR908	8E
CR914	10B
CR916	12A
CR917	12A
CR943	9D
CR945	9D
CR946	8D
CR948	7F
CR949	7E
CR961	8E
CR962	8E
J5	8F
J6	10F
J571	3D
J573	3C
J575	4C
J678	6C
J688	4C
J858†	10A
J917†	10A
J919†	11A
L582	12C
L584	12C
L585	12C
L676	5C
L942	10D
P44	8C
P500	3D
P530	2A
P630	2D
P630	2E
P700*	10C
P701*	3C
P702*	3E
P712*	4F
P715*	3F
P800	8A
P948	7F
P1020	2D
P1271	12C
Q522	4A
Q524	4A
Q622	4E
Q624	4E
Q672	5D
Q682	6D
Q710*	4D
Q712*	4D
Q820	9A
Q822	9B
Q824	9B
Q834	9B
Q844	8B
Q852	11B
Q854	12B
Q856	12A
Q864	7A
Q866	8B
Q872	10E
Q874	10E
Q882	9B
Q884	10B
Q904	7E
Q906	7E
Q912	11B
Q914	11B
Q916	11B
Q919	10B
Q924	8E
Q926	8E
Q954	7D
Q962	8E
Q964	8D
Q982	9E
Q986	9E
R502	2B
R507	2C
R508	3C
R509	2C
R511	3C
R512	3A
R516	4B
R517	4B
R518	4B
R522	4A
R523	4B
R524	5A
R525	5A
R526	4C
R527	6B
R528	6B
R531	5A
R535	6A
R536	5A
R537	5A
R540	4C
R541	4C
R543	4C
R545	6B
R547	6B
R548	6B
R550	5B
R551	5B
R553	7A
R554	6B
R601	3E
R603	2E
R604	2E
R605	2F
R606	2E
R607	2E
R608	3E
R609	4E
R611	4E
R612	4D
R616	4E
R617	4E
R618	4E
R621	3E
R622	4D
R623	4D
R624	5E
R625	5E
R627	6D
R628	6D
R631	5E
R635	6E
R636	5E
R637	5E
R640	5E
R641	5D
R643	5E
R645	6D
R647	5E
R648	6E
R650	5E
R651	5E
R653	6E
R654	6E
R655	6E
R672	5D
R673	6C
R674	5C
R675	5C
R676	5C
R678	5C
R679	5C
R681	7B
R682	5D
R682	7B
R684	6C
R685	4C
R685	4C
R688	5C
R689	6C
R693	7C
R694	7C
R710*	4C
R711*	4C
R712*	4D
R713*	4D
R715*	4D
R719*	4C
R822	8A
R822	9A
R823	9A
R825	8A
R826	8A
R827	8A
R832	8B
R833	9B
R834	8B
R836	9B
R837	8B
R842	9B
R843	8C
R844	7B
R851	10D
R852	11B
R853	12B
R855	11B
R856	11B
R857	12B
R858	10A
R863	8A
R864	8B
R865	8B
R866	7B
R867	7B
R872	10E
R873	10E
R874	10E
R875	10E
R876	10E
R877	11B
R878	11B
R882	9C
R883	9C
R884	9B
R885	10B
R886	10B
R887	9B
R888	10B
R892	10D
R901	7D
R903	10B
R904	10B
R905	7E
R906	8D
R907	7E
R908	8E
R909	7D
R910	8D
R912	10B
R913	10B
R914	11B
R915	11B
R916	11A
R917	10A
R918	10B
R919	10B
R922	10B
R923	9E
R924	8E
R925	8E
R926	8E
R927	8E
R943	10D
R944	9D
R945	9E
R948†	3F
R949	7E
R954	8D
R955	8D
R956	7D
R957	7D
R958	7D
R961	8D
R962	9E
R963	2D
R965	8D
R967	8D
R981	10D
R982	10D
R983	8E
R985	8E
R987	10E
R988	9E
R992	12C
R993	12B
R994	11C
S510A†	3C
S510B†	3C
S515†	3B
S610†	3D
S615†	3E
S948†	3F
TP554	7A
TP583	6D
TP600	6D
TP688	4C
TP883	9C
U550	5B
U600	6C
U650	5D
U980	9D
VR583	6C
VR685	4C
VR948	7E
W500	2C
W600	1E
W860	6B
W902	6D

http://manoman.sqhill.com

VOLTAGES AND WAVEFORM CONDITIONS

Voltages and waveforms similar to those shown on this diagram can be obtained by using the recommended test equipment and test set-ups listed below.

RECOMMENDED TEST EQUIPMENT

ITEM	SPECIFICATIONS		RECOMMENDED TYPE
OSCILLOSCOPE	Bandwidth	DC to 100 MHz	TEKTRONIX 465B Oscilloscope with P6066B 10X probe.
	Minimum Deflection Factor	5 mV/div	
	Input Impedance	1 MΩ/20 pF	
DIGITAL MULTIMETER (For voltage up to 1 kV)	Input Impedance	10 MΩ	TEKTRONIX DM 501A.
	Range	0 to 1 kV	
DC VOLTMETER (For voltages above 1 kV)	Input Impedance	20,000 Ω/volt	TRIPLETT Model 630NA.
	Range	0 to 6 kV	

Voltages and waveforms on this diagram were obtained under the following 466 conditions, unless noted otherwise.

POWER & CRT CONTROLS

POWER	ON (pulled out)
INTENSITY	Midrange (pushed in, Full Scan)
FOCUS	Adjusted for focused trace
Storage Mode	NON STORE (pushed in)
VIEWTIME	NORM

VERTICAL CONTROLS (BOTH CHANNELS)

VOLTS/DIV	5 mV
VAR	CAL
AC-DC-GND	DC
VERT MODE	CH 1
INVERT	Out
20 MHz BW	OUT (full bandwidth)

A TRIGGER CONTROLS

A TRIGGER HOLDOFF	NORM
TRIG MODE	AUTO
COUPLING	AC
SOURCE	NORM
LEVEL	0
SLOPE	+

B TRIGGER CONTROLS

SOURCE	STARTS AFTER DELAY
COUPLING	AC
LEVEL	0
SLOPE	+

SWEEP CONTROLS

X10 MAG	Out
POSITION	Midrange
FINE	Midrange
HORIZ DISPLAY	A
DELAY TIME POSITION	0.02
A AND B TIME/DIV and DELAY TIME (Knobs Locked)	.2 ms

Signal Applied (For Waveforms Only)

The 466 Calibrator signal is applied to the CH 1 input through a compensated 10X probe.

Test Oscilloscope Vertical input is ac coupled unless noted otherwise by a 0 volt reference on the waveform drawing.

http://manoman.sqhill.com

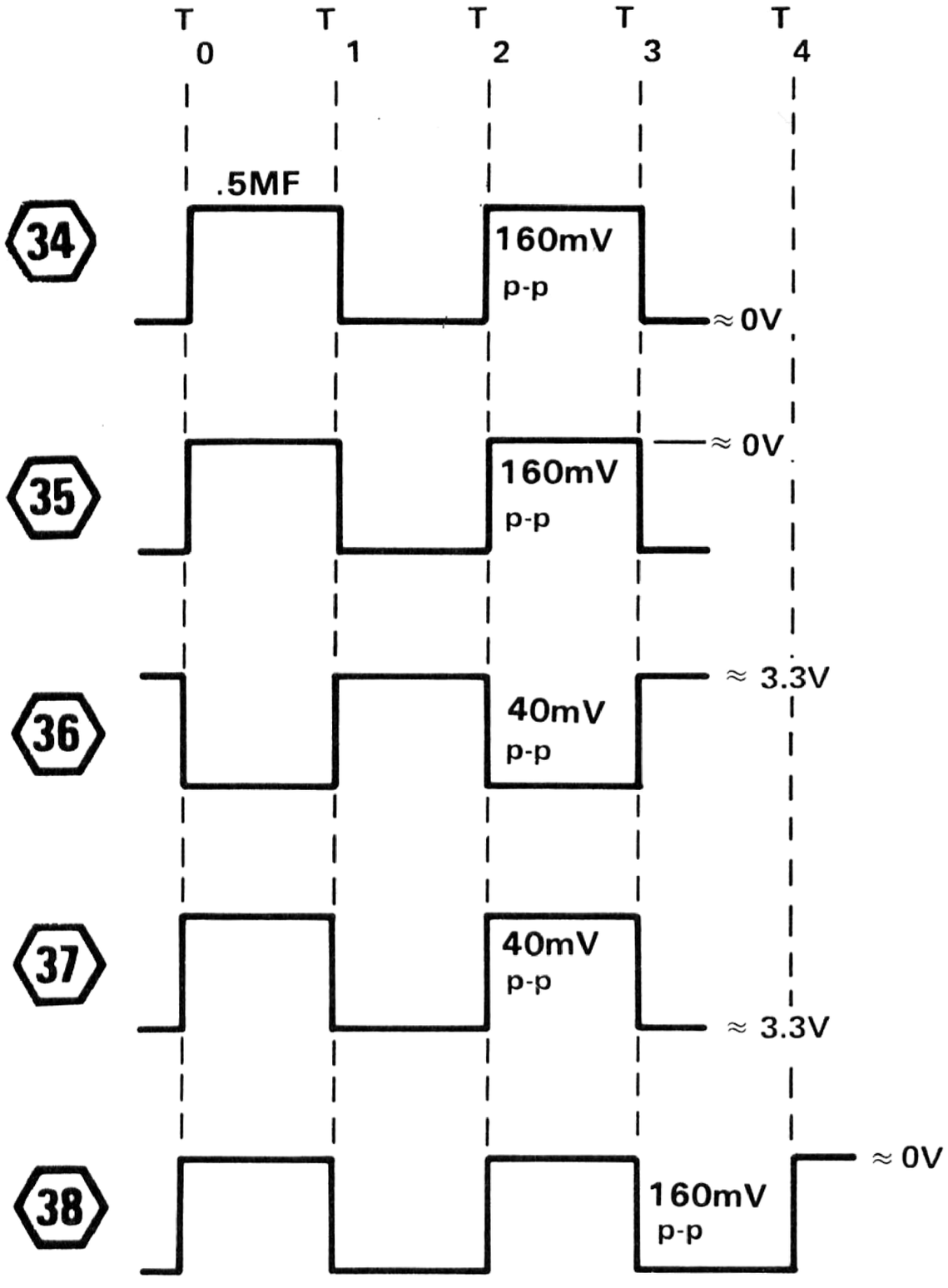

(measured with B Trigger source switch in norm.)

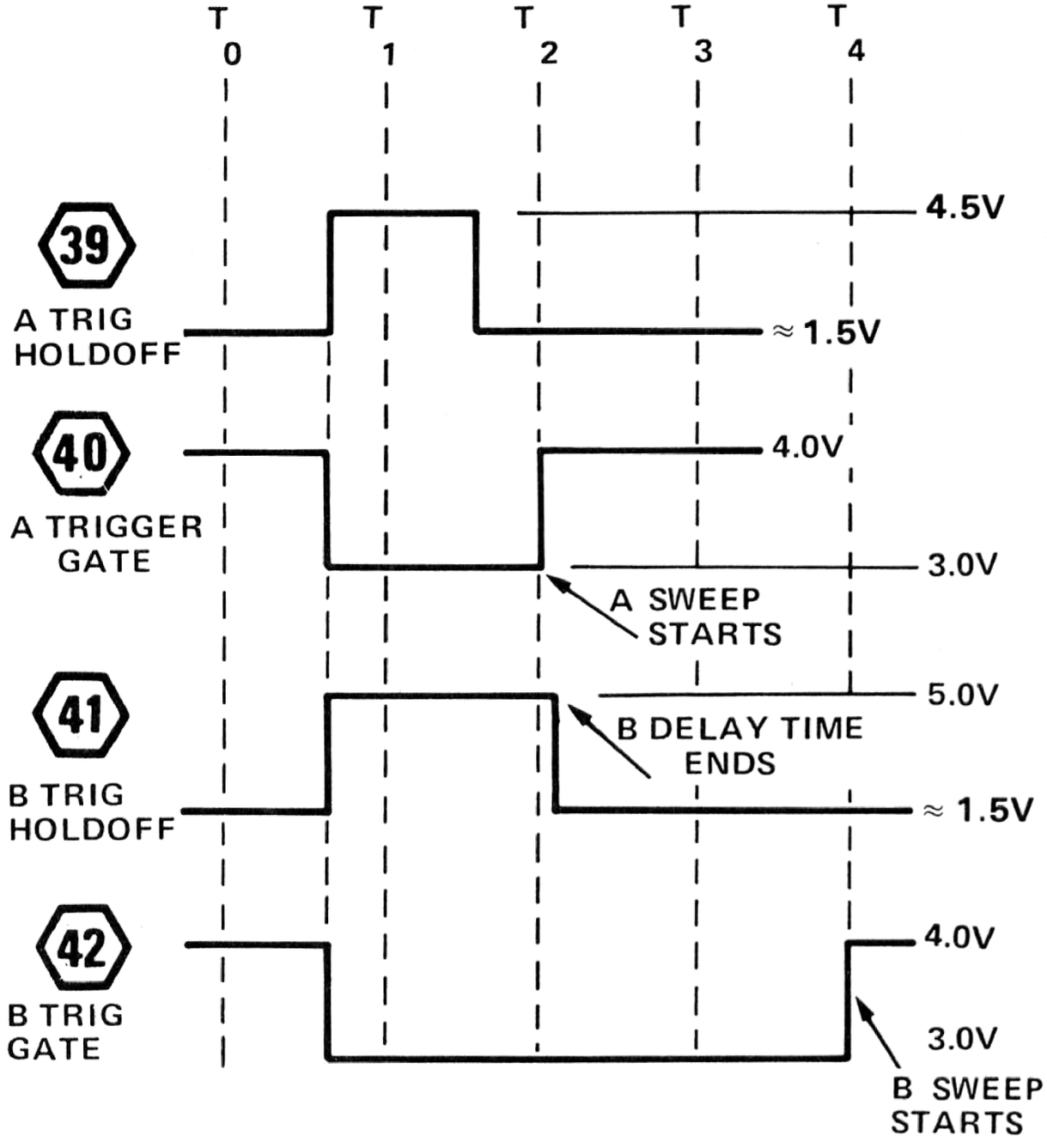

(3516-14)4796-48

http://manoman.sqhill.com

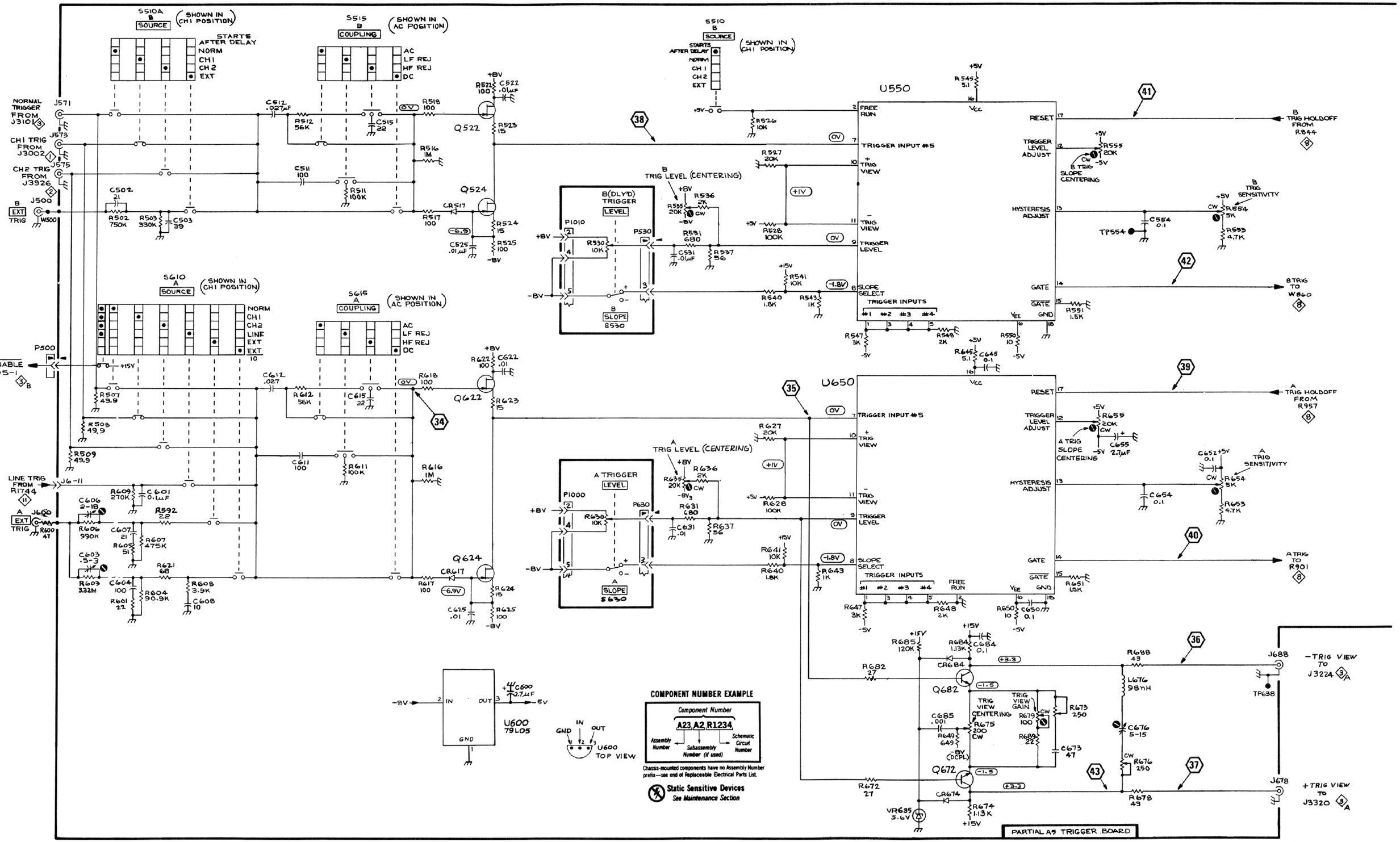

http://manoman.sqhill.com

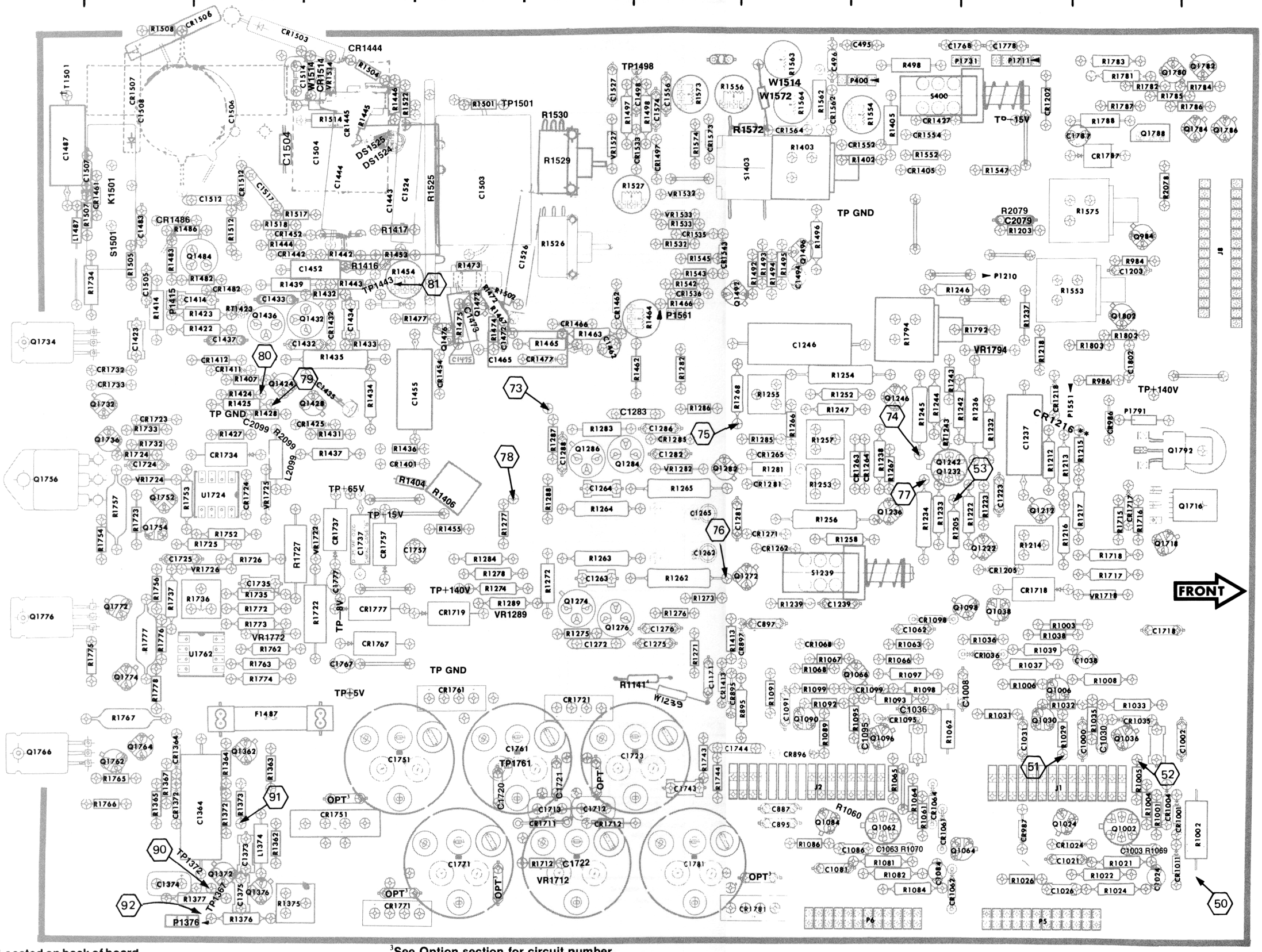

Figure 7-8. A6—Interface Board.

http://manoman.sqhill.com

CKT NO	GRID LOC
C495	9A
C496	8A
C887	8H
C895	8H
C897	8F
C1000	11G
C1002	12G
C1003	11H
C1008	10G
C1021	10H
C1024	11I
C1026	10I
C1030	11G
C1031	10G
C1036	9G
C1038	11G
C1062	9F
C1063	9H
C1081	8I
C1084	9I
C1086	9H
C1091	8G
C1095	9G
C1171	7G
C1203	11C
C1223	10E
C1237	10E
C1239	8F
C1246	8D
C1262	7F
C1263	6F
C1264	6E
C1265	7E
C1272	6F
C1275	7F
C1276	7F
C1281	7E
C1282	7E
C1283	7D
C1286	7E
C1288	6E
C1364	3H
C1373	3H
C1374	2I
C1375	3I
C1414	3C
C1423	2D
C1432	4D
C1433	3C
C1434	4D
C1435	4D
C1437	3D
C1443	4B
C1444	4B
C1452	4C
C1455	5D
C1462	6D
C1465	5D
C1472	5D
C1473	5D
C1475	5D
C1483	2C
C1487	1B
C1494	8C
C1498	7A
C1503	5B
C1504	4B
C1505	2C
C1506	3B
C1507	2B
C1508	2B
C1512	3B
C1514	3A
C1517	3B
C1524	4B
C1526	5C
C1527	6A
C1556	7A
C1574	7B
C1712	6H
C1713	6H
C1718	11F
C1720	6H
C1721	5H
C1722	6H
C1723	6G
C1724	2E
C1725	2F
C1735	3F
C1737	4F
C1743	7H
C1744	7G
C1751	4H
C1757	4F
C1761	5G
C1767	4G
C1768	10A
C1771	5H
C1777	4F
C1778	10A
C1781	7H
C1787	11B
C1802	11D
C2079	10C
C2099	3D
CR895	7G
CR896	8G
CR897	8F
CR986	11D
CR987	10H
CR1001	12H
CR1004	11H
CR1011	12H
CR1024	10H
CR1035	11G
CR1036	10G
CR1061	9H
CR1062	9I
CR1064	9H
CR1068	8F
CR1095	9G
CR1098	9F
CR1099	9G
CR1202	10B
CR1205	10F
CR1216	10D
CR1218	10D
CR1262	8F
CR1263	9E
CR1264	9E
CR1265	8E
CR1271	8E
CR1281	8E
CR1285	7E
CR1364	2G
CR1372	2H
CR1401	4E
CR1405	9B
CR1411	3D
CR1412	3D
CR1413	7G
CR1425	4D
CR1427	9B
CR1432	4D
CR1439	4C
CR1439	3C
CR1442	3C
CR1444	4A
CR1445	4B
CR1452	3C
CR1454	5D
CR1461	2B
CR1462	6C
CR1466	6D
CR1477	6D
CR1482	3C
CR1486	2C
CR1497	7B
CR1503	3A
CR1506	3A
CR1507	2A
CR1512	3B
CR1514	4A
CR1533	7B
CR1535	7C
CR1536	7C
CR1543	7C
CR1552	9B
CR1554	9B
CR1562	8B
CR1564	8B
CR1573	7B
CR1711	6H
CR1712	6H
CR1717	11E
CR1718	10F
CR1719	5F
CR1721	6G
CR1723	2D
CR1724	3E
CR1732	2D
CR1733	2D
CR1734	3E
CR1737	4E
CR1751	4H
CR1757	4F
CR1761	5G
CR1767	4F
CR1771	4I
CR1777	4F
CR1781	8I
CR1787	11B
DS1524	4B
DS1525	4B
F1487	3G
J1	10H
J2	8H
J8	12C
K1501	2B
L1374	3H
L1487	1C
L2099	3E
P5	10I
P6	9I
P400	9A
P1210	10C
P1376	2I
P1415	2C
P1551	10D
P1561	7C
P1711	10A
P1731	10A
P1791	11D
Q984	11C
Q1002	11H
Q1006	10G
Q1024	10H
Q1030	10G
Q1036	11G
Q1038	10F
Q1062	9H
Q1064	10H
Q1066	9G
Q1084	8H
Q1090	8G
Q1096	9G
Q1098	10F
Q1212	10E
Q1222	10F
Q1232	9E
Q1236	9E
Q1242	9E
Q1246	9D
Q1272	8F
Q1274	6F
Q1276	6F
Q1282	7E
Q1284	6E
Q1286	6E
Q1362	3G
Q1372	3I
Q1376	3I
Q1424	3D
Q1428	4D
Q1432	4D
Q1436	3C
Q1472	5C
Q1476	5D
Q1484	3C
Q1492	7C
Q1496	8C
Q1716	12E
Q1718	11F
Q1732	2D
Q1734	1D
Q1736	2E
Q1752	2E
Q1754	2E
Q1756	1E
Q1762	2H
Q1764	2G
Q1766	1G
Q1772	2F
Q1774	2G
Q1776	1F
Q1780	11A
Q1782	12A
Q1784	12B
Q1786	12B
Q1788	11B
Q1792	12E
Q1802	11C
R498	9A
R895	8G
R984	11C
R986	11D
R1001	11H
R1002	12H
R1003	10F
R1004	11H
R1005	11H
R1006	10G
R1008	11G
R1021	11H
R1022	11I
R1024	11I
R1026	10I
R1029	10G
R1031	10G
R1032	10G
R1033	11G
R1035	11G
R1036	10F
R1037	10G
R1038	10F
R1039	10F
R1060 †	9H
R1061	9H
R1062	9G
R1063	9F
R1064	9H
R1065	9H
R1066	9G
R1067	8G
R1068	8G
R1069	11H
R1070	9H
R1081	9H
R1082	9I
R1084	9I
R1086	8H
R1089	8G
R1091	8G
R1092	8G
R1093	9G
R1095	9G
R1097	9G
R1098	9G
R1099	8G
R1141	7G
R1203	10C
R1205	9E
R1212	10E
R1213	10E
R1214	10F
R1215	11E
R1216	10E
R1217	11E
R1218	10D
R1222	10E
R1223	10E
R1232	10E
R1233	9E
R1234	9E
R1236	10D
R1237	10C
R1238	9E
R1239	8F
R1242	10D
R1243	9D
R1244	9D
R1245	9D
R1246	9C
R1247	8D
R1252	8D
R1253	8E
R1254	8D
R1255	8D
R1256	8E
R1257	8E
R1258	8F
R1262	7F
R1263	6F
R1264	6E
R1265	7E
R1266	8D
R1267	9E
R1268	7D
R1271	7G
R1272	6F
R1273	7F
R1274	5F
R1275	6F
R1276	7F
R1277	5E
R1278	5F
R1281	8E
R1282	7D
R1283	6E
R1284	5F
R1285	8E
R1286	7D
R1287	6E
R1288	6E
R1289	5F
R1362	3H
R1363	3H
R1364	3H
R1365	2H
R1367	2H
R1372	3H
R1373	3H
R1375	3I
R1376	3I
R1377	3I
R1402	9B
R1403	8B
R1404	4E
R1405	9B
R1406	5E
R1407	3D
R1413	7F
R1414	2C
R1416	4C
R1417	4C
R1422	3D
R1423	3C
R1424	3D
R1425	3D
R1427	3E
R1428	3D
R1431	4E
R1432	4C
R1433	4D
R1434	4D
R1435	4D
R1436	4E
R1437	4E
R1439	3C
R1442	4C
R1443	4C
R1444	3C
R1445	4B
R1446	4B
R1453	4C
R1454	4C
R1455	5E
R1462	7D
R1463	6D
R1464	7C
R1465	6D
R1466	7C
R1467	5C
R1472	5C
R1473	5C
R1474	5D
R1475	5D
R1477	5D
R1482	3C
R1483	2C
R1486	2C
R1492	8C
R1493	8C
R1494	8C
R1495	8C
R1496	8C
R1497	6B
R1498	7B
R1501	5B
R1502	5C
R1504	4A
R1505	2C
R1507	2C
R1508	2A
R1512	3C
R1514	4B
R1517	3C
R1518	3C
R1522	4B
R1525	5B
R1526	6C
R1527	6B
R1529	6B
R1530	6B
R1532	7C
R1533	7C
R1542	7C
R1543	7C
R1545	7C
R1547	10B
R1552	9B
R1553	10C
R1554	9B
R1556	7A
R1562	8B
R1563	8A
R1564	8B
R1572	8A
R1573	7A
R1574	7B
R1575	11C
R1712	6H
R1715	11E
R1717	11F
R1718	11F
R1722	4F
R1723	2E
R1724	2E
R1725	3F
R1726	3F
R1727	3F
R1732	2E
R1733	2E
R1734	2C
R1735	3F
R1736	3F
R1737	2F
R1743	7H
R1744	7H
R1752	3E
R1753	2E
R1754	2F
R1756	2F
R1757	2E
R1762	3G
R1763	3G
R1765	2H
R1766	2H
R1767	2G
R1772	3F
R1773	3F
R1774	3G
R1775	2G
R1776	2F
R1777	2F
R1778	2G
R1781	11A
R1782	11A
R1783	11A
R1784	12A
R1785	11B
R1786	12B
R1787	11B
R1788	11B
R1792	10D
R1794	9D
R1802	11D
R1803	11D
R2078	11B
R2079	10C
R2099	3E
RT1243	9E
RT1423	3C
S400	9B
S1239	8F
S1403	8B
S1501	2C
T1501 †	1A
TP−15V	10B
TP−8V	4F
TP+5V	4G
TP+15V	4E
TP+65V	4E
TP+140V	5F
TP+140V	11D
TP1367	3I
TP1372	2I
TP1498	7A
TP1501	5B
VR1282	7E
VR1289	5F
VR1514	4B
VR1527	6B
VR1532	7B
VR1533	7C
VR1712	6I
VR1718	11F
VR1722	4F
VR1724	2E
VR1725	3E
VR1726	3F
VR1772	3F
VR1794	10D
U1724	3E
U1762	3G
W1239	7G
W1514	4A
W1572	8A

http://manoman.sqhill.com

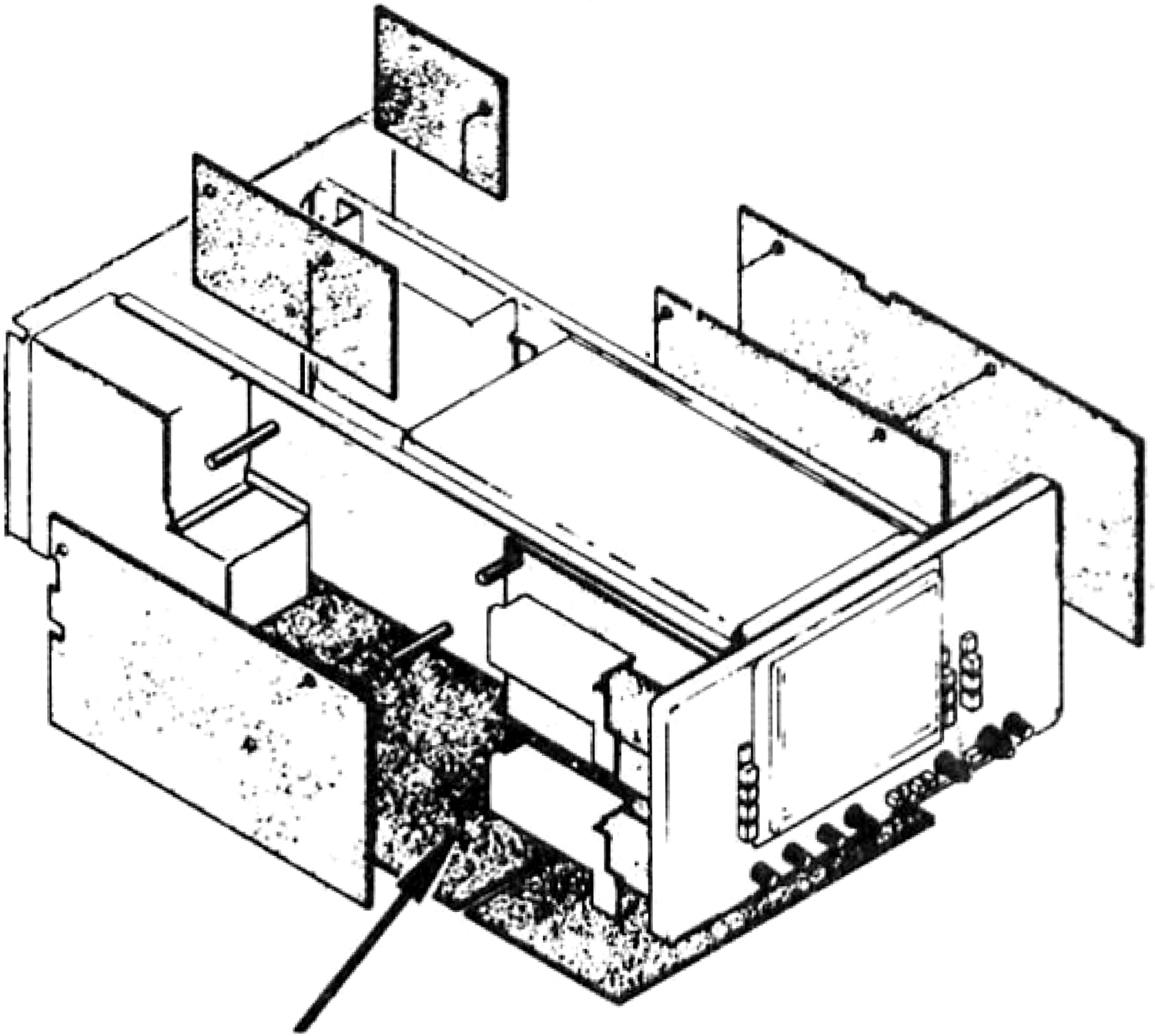

INTERFACE A6

http://manoman.sqhill.com

VOLTAGES AND WAVEFORM CONDITIONS

Voltages and waveforms similar to those shown on this diagram can be obtained by using the recommended test equipment and test set-ups listed below.

RECOMMENDED TEST EQUIPMENT

ITEM	SPECIFICATIONS		RECOMMENDED TYPE
OSCILLOSCOPE	Bandwidth	DC to 100 MHz	TEKTRONIX 465B Oscilloscope with P6065 or P6062B 10X probe.
	Minimum Deflection Factor	5 mV/div	
	Input Impedance	1 MΩ/20 pF	
DIGITAL MULTIMETER (For voltage up to 1 kV)	Input Impedance	10 MΩ	TEKTRONIX DM 501A.
	Range	0 to 1 kV	
DC VOLTMETER (For voltages above 1 kV)	Input Impedance	20,000 Ω/volt	TRIPLETT Model 630NA.
	Range	0 to 6 kV	

Voltages and waveforms on this diagram were obtained under the following 466 conditions, unless noted otherwise.

POWER & CRT CONTROLS

POWER	ON (pulled out)
INTENSITY	Midrange (pushed in, Full Scan)
FOCUS	Adjusted for focused trace
Storage Mode	NON STORE (pushed in)
VIEWTIME	NORM

VERTICAL CONTROLS (BOTH CHANNELS)

VOLTS/DIV	5 mV
VAR	CAL
AC-DC-GND	DC
VERT MODE	CH 1
INVERT	Out
20 MHz BW	OUT (full bandwidth)

A TRIGGER CONTROLS

A TRIGGER HOLDOFF	NORM
TRIG MODE	AUTO
COUPLING	AC
SOURCE	NORM
LEVEL	0
SLOPE	+

B TRIGGER CONTROLS

SOURCE	STARTS AFTER DELAY
COUPLING	AC
LEVEL	0
SLOPE	+

SWEEP CONTROLS

X10 MAG	Out
POSITION	Midrange
FINE	Midrange
HORIZ DISPLAY	A
DELAY TIME POSITION	0.02
A AND B TIME/DIV and DELAY TIME (Knobs Locked)	.2 ms

Signal Applied (For Waveforms Only)

The 466 Calibrator signal is applied to the CH 1 input through a compensated 10X probe.

Test Oscilloscope Vertical input is ac coupled unless noted otherwise by a 0 volt reference on the waveform drawing.

http://manoman.sghill.com

'A' SWP FROM P1-3
DIAG 7

MIX S1120 7

+65V
R1063 100
R1062 5.6K
C1062 0.1
+15V
Q1064
+14.4V
CR1061
R1061 36
CR1064
R1064 36
CR1062
P6-1
'B' SWEEP END TO Q872
DIAG 8

J2-5
+12.7V R1060 100
Q1062A
R1069 150
C1063 91
Q1062B
R1065 22

B TIME/DIV S1150 7
+VT RT CT
PARTIAL A7 TIMING BOARD
J2-3
J2-7

R1081 1.0K
C1081 .02
-4V
R1082 1.0K
-8V
'B' SWEEP START FROM Q866
DIAG 8
P6-4
-4.5V
C1086 100
R1086 180
R1084 511
C1084 15μF
-8V
Q1084
-9V

+15V
R1068 180
CR1068
R1067 100
+15V
R1066 56
Q1066
+15V
R1098 2.37K
CR1098
+13V
R1097 4.02K
-0.6V
Q1098
'B' SWEEP TO Q1232
DIAG 9
CR1099
R1099 560

+15V
R1091 47
C1091 .02
Q1090
R1089 100
+0.85V
R1092 100
C1095 10
CR1095
R1095 100
+0.6V
Q1096
R1093 4.53K
-8V

J2-6
-8V
DLY'D
INTEN
MIX
A

7 S1120 HORIZ DISPLAY

SEE PARTS LIST FOR EARLIER VALUES AND SERIAL NUMBER RANGES OF PARTS OUTLINED OR DEPICTED IN GREY.

+65V
R1003 100
R1002 5.6K
C1002 0.1
50 2V 1ms 0V
+14.4V
CR1001
R1001 36
CR1004
R1004 36
CR1011
P5-3
'A' SWEEP END TO Q926
DIAG 8

8 R1115
SWP START
J1-4 +12.7V
C1000 .02
+13.4V
Q1002A
+13.7V
R1070 150
C1003 91
Q1002B
R1005 22

TO R827 8
A TIME/DIV S1150 7
+VT RT CT
PARTIAL A7 TIMING BOARD
J1-3
J1-7

+15V
R1006 56
Q1006
+13.3V
R1008 2.05K
C1008 .01
52 2V 1ms 0V
+13V
R1037 4.02K
+15V
R1038 47
C1038 15μF
R1039 2.32K
+0.6V
Q1038
'A' SWEEP TO Q1232
DIAG 9
CR1036
R1036 560
C1036 0.1
53 50mV 1ms 0V
J2-2

R1021 1.0K
C1021 .002
-4V
R1022 1.0K
CR1024
-8V
-4.5V
'A' SWEEP START FROM CR908
DIAG 8
P5-5
C1026 100
R1026 180
R1024 511
C1024 15μF
-8V
Q1024
51 2V 1ms 0V
-0.6V

+15V
R1031 47
C1031 .02
Q1030
R1029 100
+0.85V
R1032 100
C1030 10
CR1035
R1035 100
+0.6V
Q1036
R1033 4.53K
-8V

SEE PARTS LIST FOR SEMICONDUCTOR TYPES.

COMPONENT NUMBER EXAMPLE
Component Number: A23 A2 R1234
Assembly Number · Subassembly Number (if used) · Schematic Circuit Number
Chassis-mounted components have no Assembly Number prefix—see end of Replaceable Electrical Parts List.

Static Sensitive Devices
See Maintenance Section

PARTIAL A7 TIMING BOARD
PARTIAL A6 INTERFACE BOARD
PARTIAL A7 TIMING BOARD

http://manoman.sqhill.com
(1753-87) 4796-17
REV MAR 1986

A&B SWEEP GENERATORS 6

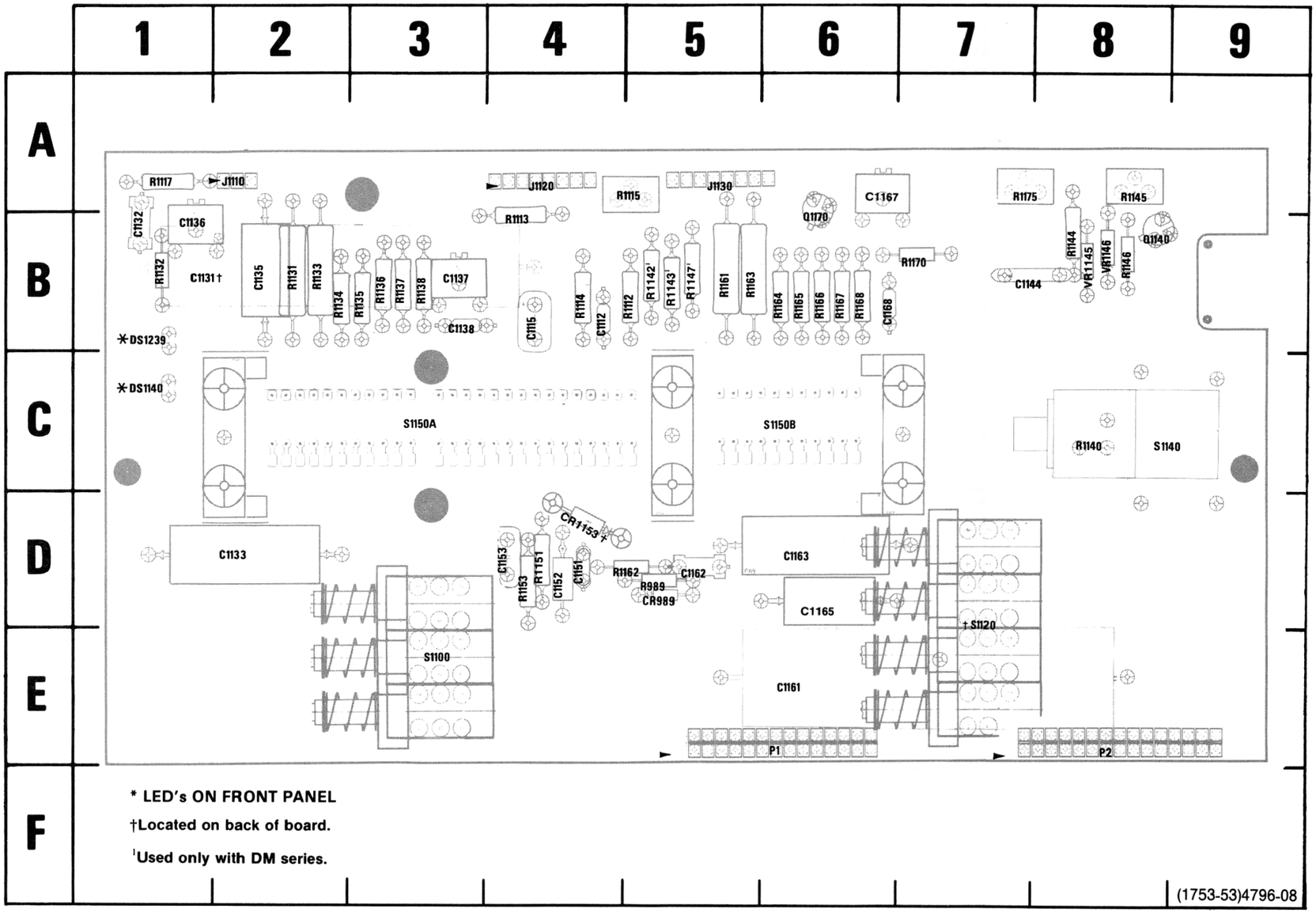

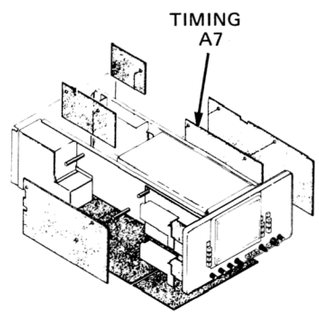

Figure 7-9. A7—Timing Board.

CKT NO	GRID LOC	CKT NO	GRID LOC	CKT NO	GRID LOC	CKT NO	GRID LOC	CKT NO	GRID LOC
C1112	4B	C1163	6D	Q1140	8B	R1137	3B	R1165	6B
C1115	4B	C1165	6D	Q1170	6B	R1138	3B	R1166	6B
C1131†	1B	C1167	6A			R1140	8C	R1167	6B
C1132	1B	C1168	6B	R989	5D	R1142'	5B	R1168	6B
C1133	2D			R1112	5B	R1143'	5B	R1170	7B
C1135	2B	CR989	5D	R1113	4B	R1144	8B	R1175	7A
C1136	1B	CR1153 †	4D	R1114	4B	R1145	8A		
C1137	3B			R1115	5A	R1146	8B	S1100	3E
C1138	3B	DS1140*	1C	R1117	1A	R1147'	5B	S1120†	7D
C1144	7B	DS1239*	1B	R1131	2B	R1151	4D	S1140	8C
C1151	4D			R1132	1B	R1153	4D	S1150A	3C
C1152	4D	J1110	2A	R1133	2B	R1161	5B	S1150B	6C
C1153	4D	J1120	4A	R1134	2B	R1162	5D		
C1161	6E	J1130	5A	R1135	3B	R1163	5B	VR1145	8B
C1162	5D			R1136	3B	R1164	6B	VR1146	8B
		P1	6E						
		P2	8E						

http://manoman.sqhill.com

VOLTAGES AND WAVEFORM CONDITIONS

Voltages and waveforms similar to those shown on this diagram can be obtained by using the recommended test equipment and test set-ups listed below.

RECOMMENDED TEST EQUIPMENT

ITEM	SPECIFICATIONS		RECOMMENDED TYPE
OSCILLOSCOPE	Bandwidth	DC to 100 MHz	TEKTRONIX 465B Oscilloscope with P6065 or P6062B 10X probe.
	Minimum Deflection Factor	5 mV/div	
	Input Impedance	1 MΩ/20 pF	
DIGITAL MULTIMETER (For voltage up to 1 kV)	Input Impedance	10 MΩ	TEKTRONIX DM 501A.
	Range	0 to 1 kV	
DC VOLTMETER (For voltages above 1 kV)	Input Impedance	20,000 Ω/volt	TRIPLETT Model 630NA.
	Range	0 to 6 kV	

Voltages and waveforms on this diagram were obtained under the following 466 conditions, unless noted otherwise.

POWER & CRT CONTROLS

POWER	ON (pulled out)
INTENSITY	Midrange (pushed in, Full Scan)
FOCUS	Adjusted for focused trace
Storage Mode	NON STORE (pushed in)
VIEWTIME	NORM

VERTICAL CONTROLS (BOTH CHANNELS)

VOLTS/DIV	5 mV
VAR	CAL
AC-DC-GND	DC
VERT MODE	CH 1
INVERT	Out
20 MHz BW	OUT (full bandwidth)

A TRIGGER CONTROLS

A TRIGGER HOLDOFF	NORM
TRIG MODE	AUTO
COUPLING	AC
SOURCE	NORM
LEVEL	0
SLOPE	+

B TRIGGER CONTROLS

SOURCE	STARTS AFTER DELAY
COUPLING	AC
LEVEL	0
SLOPE	+

SWEEP CONTROLS

X10 MAG	Out
POSITION	Midrange
FINE	Midrange
HORIZ DISPLAY	A
DELAY TIME POSITION	0.02
A AND B TIME/DIV and DELAY TIME (Knobs Locked)	.2 ms

Signal Applied (For Waveforms Only)

The 466 Calibrator signal is applied to the CH 1 input through a compensated 10X probe.

Test Oscilloscope Vertical input is ac coupled unless noted otherwise by a 0 volt reference on the waveform drawing.

http://manoman.sqhill.com

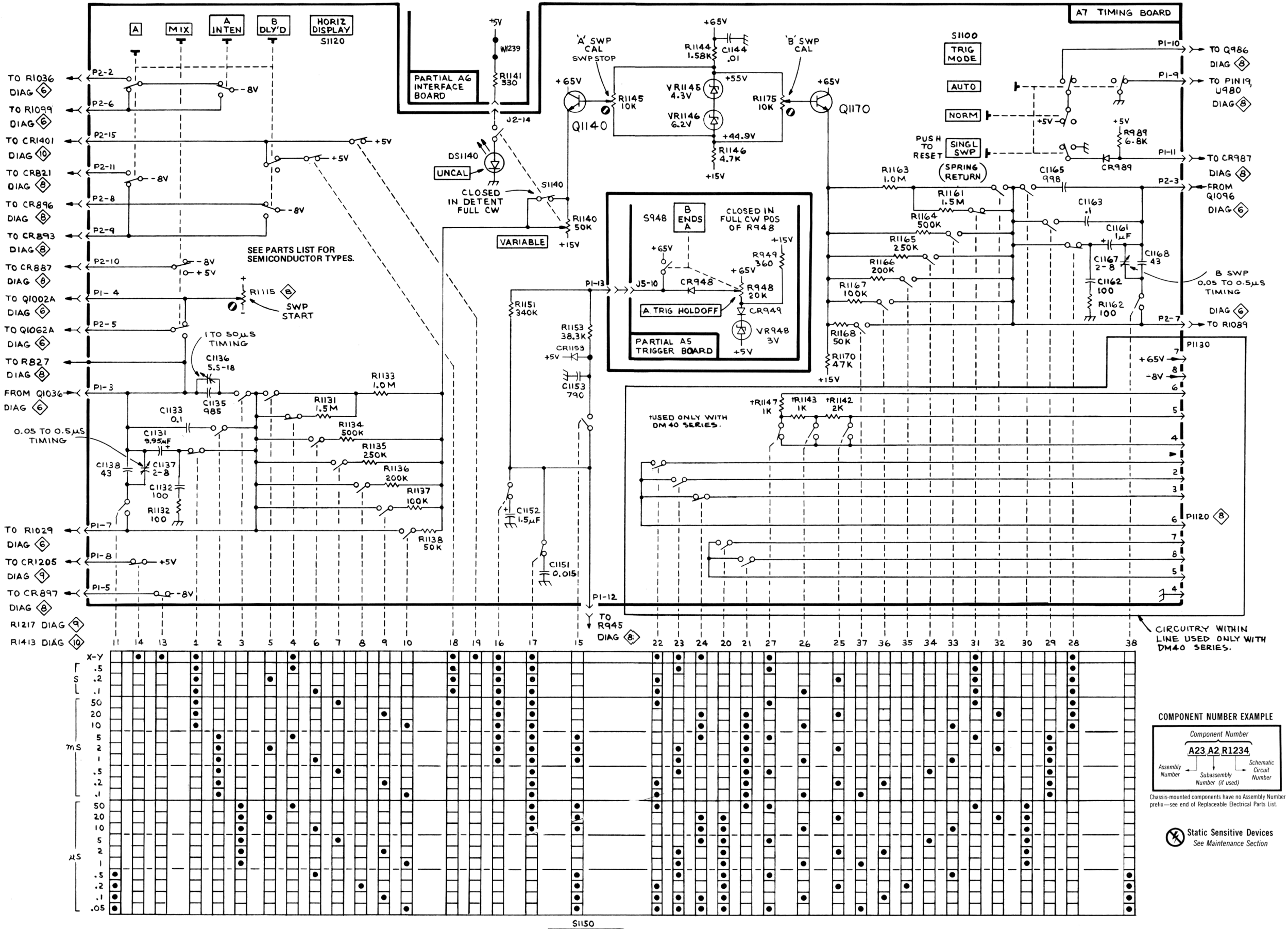

COMPONENT NUMBER EXAMPLE

Chassis-mounted components have no Assembly Number prefix—see end of Replaceable Electrical Parts List.

Static Sensitive Devices
See Maintenance Section

A & B TIMING SWITCH 7

http://manoman.sqhill.com

54

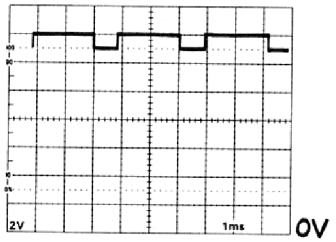

55

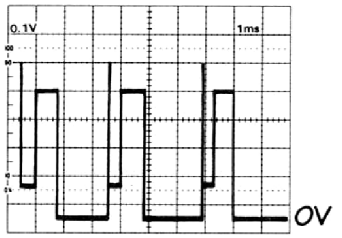

57

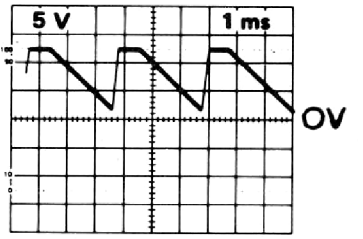

59

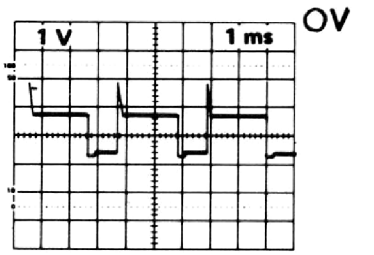

60

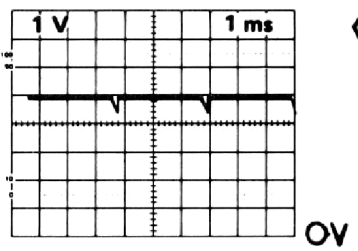

61

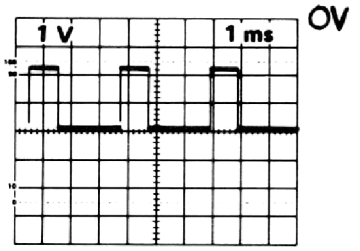

62

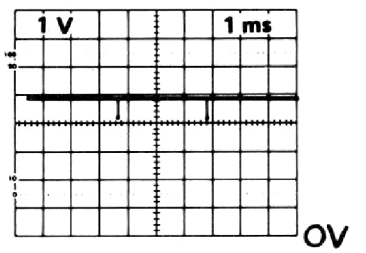

63

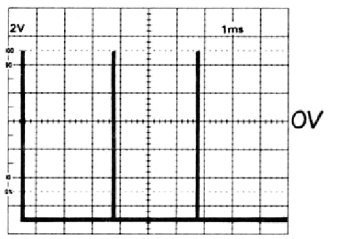

64

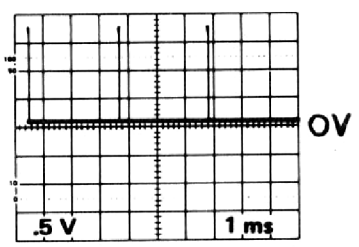

65

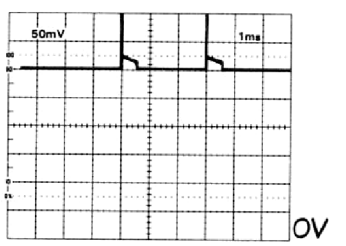

66

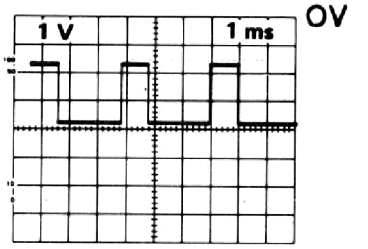

67

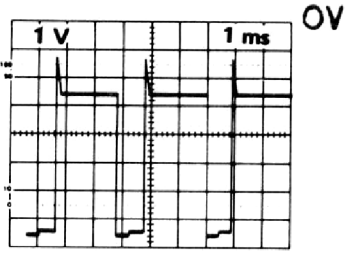

68

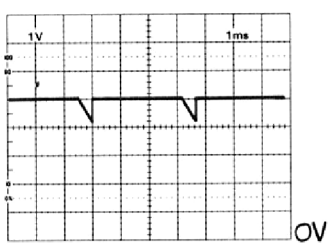

69

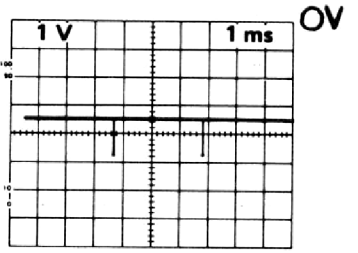

70

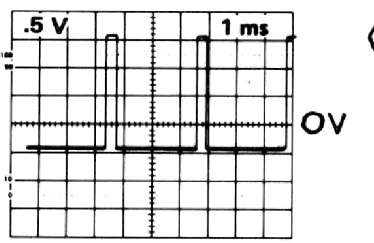

71

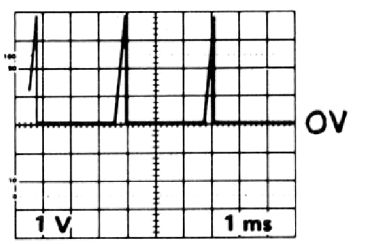

NOTE

WAVEFORMS 54 THROUGH 64 WERE OBTAINED WITH B SWEEP RUNNING.

http://manoman.sqhill.com

http://manoman.sqhill.com

* SEE DM MANUAL, VALUES DIFFER WHEN DM IS USED.

COMPONENT NUMBER EXAMPLE

Component Number: A23 A2 R1234 (Assembly Number; Subassembly Number (if used); Schematic Circuit Number)

Chassis-mounted components have no Assembly Number prefix—see end of Replaceable Electrical Parts List.

Static Sensitive Devices — See Maintenance Section

SEE PARTS LIST FOR EARLIER VALUES AND SERIAL NUMBER RANGES OF PARTS OUTLINED OR DEPICTED IN GREY.

DMM ONLY

DELAY TIME POSITION

SWP START (+12.7)

'A' SWP START LEVEL TO Q1002A DIAG 6

'B' SWP START LEVEL TO Q1062A DIAG 6

'A' SWP FROM Q1036 DIAG 6

S1120 MIX

P1-4, P1-3, P2-5

R1112* 196, R1113 49.9, R1115 100, C1115 100µF, C1112 .022, R1114 2.49K, R1116* 2K, R1117* 562, J1110

PARTIAL A7 TIMING BOARD — P1120

P800

R822 100, C822 1.0µF (NOT USED WITH DM44), CR822, CR823, Q820 (A, B), Q822, R827 100

+15V, +65V, CR824, R824 430, R825 100K, R832 8.2K, R833 100K, CR834, R834 240, R826 2K, R836 1.1K, R837 12K, R842 1.8K, -8V

Q824, Q834, Q844, R844 1K, R843 27

B TRIG HOLDOFF TO U550 PIN 17 DIAG 5

+5V (DCPL I), R851 1.1K, CR851, CR821, R823 2.26K, CR852

B TRIG FROM U550 PIN 14 DIAG 5, W860, R862 39, R861 2.7K

Q864, Q866, R863 909, R866 300, R867 680

R864 680, R865 680, CR865, CR857

+15V (DCPL), +5V (DCPL I), R857 910, R853 4.7K, CR853, Q856, R854 453, R855 220

R876 2.43K, R872 10K, R875 1.05K, Q874, R874 3.92K, C874 22, R878 976, R877 590, CR874

'B' SWP END FROM CR1062 DIAG 6, J6-1, Q872, R873 499

Q852, Q854, R852 1.47K, R856 453

R885 22, C885 47µF, R886 1K, Q884, R884 10K, R887 1K, CR885

LOCATION SN B102860- UP, R888 1K, C882 22, R882 10K, CR884, Q882, R883 15K, TP883, CR882, CR887, CR888

S1120 MIX, -8V, +5V, J2-10, C887 .01

PARTIAL A7 TIMING BOARD, PARTIAL A6 INTERFACE BOARD

A TRIG FROM U650 PIN 14 DIAG 5, W902, R901 39

Q904, Q906, R905 806, R906 470, R907 1K, R904 453, R909 750, R910 2K, R903 453, L942 2.7µH

SWEEP LOCKOUT FROM R1874 DIAG 12, J8-1

PARTIAL A7 TIMING BOARD

S1150 TIME/DIV, S1100 TRIGGER MODE, NORM, AUTO

PUSH TO RESET, SINGL SWP (SPRING RETURN), R989 6.8K, CR989

FROM CR1205 DIAG 9

R984 1.2K, Q984, R985 1.2K, R982 240, R983 1K, Q982

J1-8, J5-1, J1-9, J5-6, J1-10, J5-7, J1-11, J5-8

CR987, CR986, TO C1802 DIAG 12, R986 10K

C987 10µF

U980

+TD IN, H-O START, -TD IN, +TD OUT, -TD OUT, AUTO RC, LOCKOUT IN, HO OUT, HO RC, AUTO, SINGLE SWEEP, SWP DISABLE, RESET TIMING, TRIG'D, RESET START, READY

C943 15, R944 330K, CR943, C944 1µF, C945 150, CR945, R945 100

R967 330, C967 2.7µF, R965 330, C965 2.7µF, Q964, CR962

W963, C968 2.7µF, R987 1K, R988 3.9K

P1020, TRIG'D DS967, READY DS965

A TRIG HOLDOFF TO U650 PIN 17 DIAG 5

R954 1.3K, R955 1.8K, Q954, R956 27, R958 10K, Q962, R961 39K, R962 5.6K

PARTIAL A5 TRIGGER BOARD

PARTIAL A6 INTERFACE BOARD

PARTIAL AIO STORAGE BOARD

S1921D FAST

J5-11, J8-8

S1120 HORIZ DISPLAY

A, MIX, INTEN, DLY'D

S1150 TIME/DIV (X-Y)

J2-11, J2-9, PARTIAL A6 INTERFACE BOARD

J6-8, J6-6, J6-9

+5V (DCPL-I), R892 1.8K, CR892, CR893, CR894, C895 .01

R895 1.5K, CR895, CR896, CR897, J2-8, J1-5, C897 0.1

UNBLANKING TO Q1424 DIAG 10

'B' SWP START GATE TO Q1084 DIAG 6

PARTIAL A7 TIMING BOARD

J6-4

R858 470, J858, B+GATE

CR858, +5V (DCPL2), R914 4.7K

+15V (DCPL), R916 910, CR916, CR914, Q916, CR917, C919 150, R915 220, R917 470 (DCPL2), R918 1K, R919 7.5K, Q919, J917, J918, A+GATE, J919, ALT SYNC PULSE TO J3901 VERT PREAMP

R923 866, Q924, R924 2.26K, R925 8.87K, Q926, R927 10K, C925 22, C922 2.2, R926 200, J5-3, J5-2, 'A' SWP END FROM CR1011 DIAG 6, 'A' SWP END TO PIN 5 U1866B DIAG 12

Q912, Q914, R913 357, R912 1.47K, C908 100, CR908, R922 215

S948 B ENDS A CLOSED IN FULL CW POS OF R948

J5-5, 'A' SWP START TO Q1024 DIAG 6

C947 270, A TRIG HOLDOFF, +65V, CR946, R949 360, R948 20K, CW, CR948, CR949, VR948 3V, J5-10

S1150 TIME/DIV, P1-13, P1-12, R HO, C HO, J5-9

R945 100, CR945, +5V

NOTE: DC VOLTAGES OBTAINED WITH A SWEEP ONLY RUNNING.

SWEEP & Z AXIS LOGIC 8

VOLTAGES AND WAVEFORM CONDITIONS

Voltages and waveforms similar to those shown on this diagram can be obtained by using the recommended test equipment and test set-ups listed below.

RECOMMENDED TEST EQUIPMENT

ITEM	SPECIFICATIONS		RECOMMENDED TYPE
OSCILLOSCOPE	Bandwidth	DC to 100 MHz	TEKTRONIX 465B Oscilloscope with P6065 or P6062B 10X probe.
	Minimum Deflection Factor	5 mV/div	
	Input Impedance	1 MΩ/20 pF	
DIGITAL MULTIMETER (For voltage up to 1 kV)	Input Impedance	10 MΩ	TEKTRONIX DM 501A.
	Range	0 to 1 kV	
DC VOLTMETER (For voltages above 1 kV)	Input Impedance	20,000 Ω/volt	TRIPLETT Model 630NA.
	Range	0 to 6 kV	

Voltages and waveforms on this diagram were obtained under the following 466 conditions, unless noted otherwise.

POWER & CRT CONTROLS

POWER	ON (pulled out)
INTENSITY	Midrange (pushed in, Full Scan)
FOCUS	Adjusted for focused trace
Storage Mode	NON STORE (pushed in)
VIEWTIME	NORM

VERTICAL CONTROLS (BOTH CHANNELS)

VOLTS/DIV	5 mV
VAR	CAL
AC-DC-GND	DC
VERT MODE	CH 1
INVERT	Out
20 MHz BW	OUT (full bandwidth)

A TRIGGER CONTROLS

A TRIGGER HOLDOFF	NORM
TRIG MODE	AUTO
COUPLING	AC
SOURCE	NORM
LEVEL	0
SLOPE	+

B TRIGGER CONTROLS

SOURCE	STARTS AFTER DELAY
COUPLING	AC
LEVEL	0
SLOPE	+

SWEEP CONTROLS

X10 MAG	Out
POSITION	Midrange
FINE	Midrange
HORIZ DISPLAY	A
DELAY TIME POSITION	0.02
A AND B TIME/DIV and DELAY TIME (Knobs Locked)	.2 ms

Signal Applied (For Waveforms Only)

The 466 Calibrator signal is applied to the CH 1 input through a compensated 10X probe.

Test Oscilloscope Vertical input is ac coupled unless noted otherwise by a 0 volt reference on the waveform drawing.

http://manoman.sqhill.com

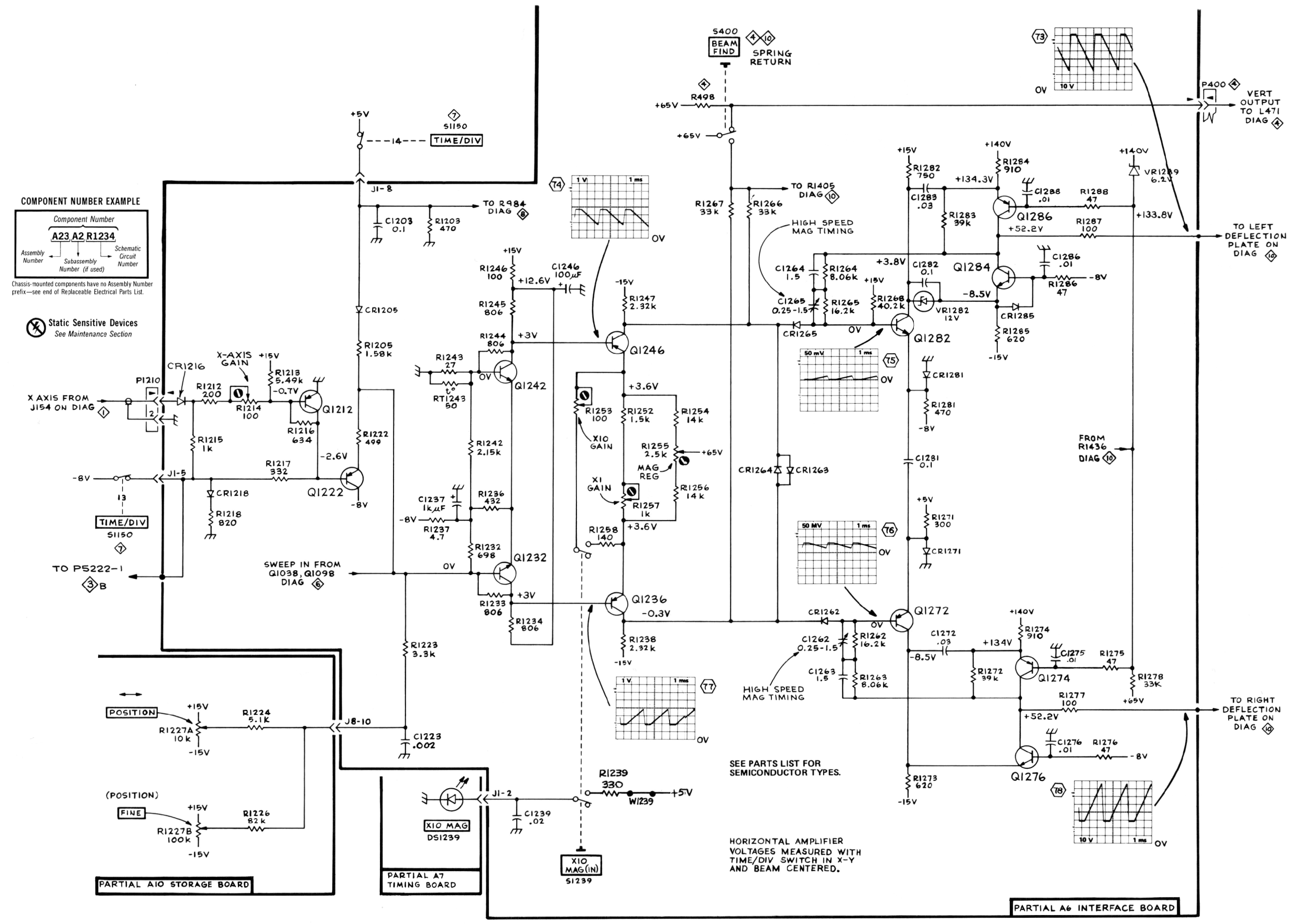

HORIZONTAL AMPLIFIER 9

(1753-90) 4796-20

http://manoman.sq

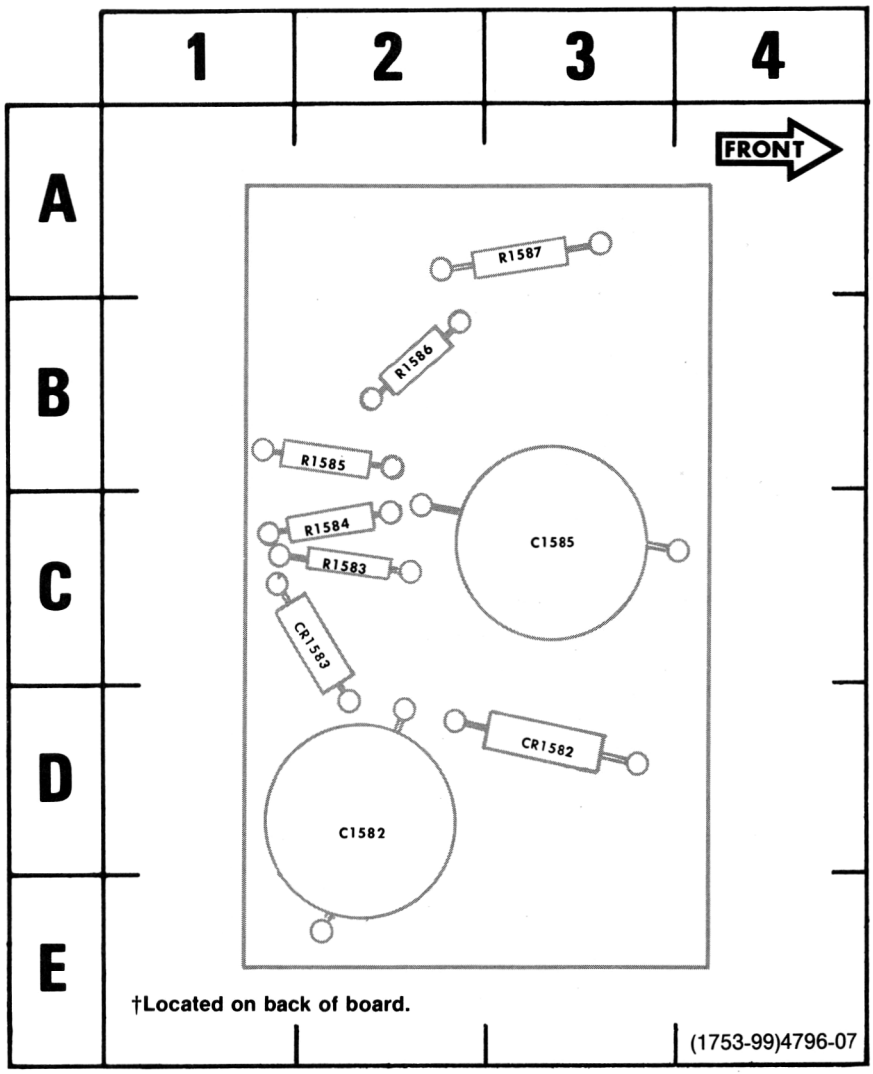

Figure 7-10. A8—High Voltage Multiplier Board.

CKT NO	GRID LOC
C1582	2D
†C1583	
C1585	3C
CR1582	3D
CR1583	2C
R1583	2C
R1584	2C
R1585	2B
R1586	2B
R1587	3A

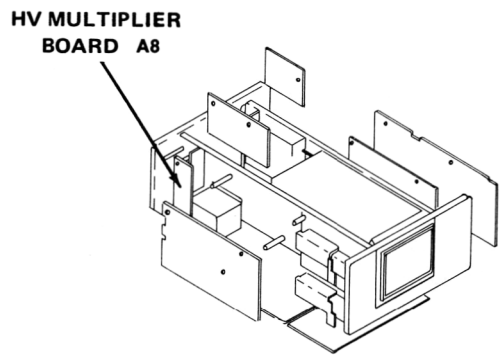

http://manoman.sqhill.com

VOLTAGES AND WAVEFORM CONDITIONS

Voltages and waveforms similar to those shown on this diagram can be obtained by using the recommended test equipment and test set-ups listed below.

RECOMMENDED TEST EQUIPMENT

ITEM	SPECIFICATIONS		RECOMMENDED TYPE
OSCILLOSCOPE	Bandwidth	DC to 100 MHz	TEKTRONIX 465B Oscilloscope with P6065 or P6062B 10X probe.
	Minimum Deflection Factor	5 mV/div	
	Input Impedance	1 MΩ/20 pF	
DIGITAL MULTIMETER (For voltage up to 1 kV)	Input Impedance	10 MΩ	TEKTRONIX DM 501A.
	Range	0 to 1 kV	
DC VOLTMETER (For voltages above 1 kV)	Input Impedance	20,000 Ω/volt	TRIPLETT Model 630NA.
	Range	0 to 6 kV	

Voltages and waveforms on this diagram were obtained under the following 466 conditions, unless noted otherwise.

POWER & CRT CONTROLS

POWER	ON (pulled out)
INTENSITY	Midrange (pushed in, Full Scan)
FOCUS	Adjusted for focused trace
Storage Mode	NON STORE (pushed in)
VIEWTIME	NORM

VERTICAL CONTROLS (BOTH CHANNELS)

VOLTS/DIV	5 mV
VAR	CAL
AC-DC-GND	DC
VERT MODE	CH 1
INVERT	Out
20 MHz BW	OUT (full bandwidth)

A TRIGGER CONTROLS

A TRIGGER HOLDOFF	NORM
TRIG MODE	AUTO
COUPLING	AC
SOURCE	NORM
LEVEL	0
SLOPE	+

B TRIGGER CONTROLS

SOURCE	STARTS AFTER DELAY
COUPLING	AC
LEVEL	0
SLOPE	+

SWEEP CONTROLS

X10 MAG	Out
POSITION	Midrange
FINE	Midrange
HORIZ DISPLAY	A
DELAY TIME POSITION	0.02
A AND B TIME/DIV and DELAY TIME (Knobs Locked)	.2 ms

Signal Applied (For Waveforms Only)

The 466 Calibrator signal is applied to the CH 1 input through a compensated 10X probe.

Test Oscilloscope Vertical input is ac coupled unless noted otherwise by a 0 volt reference on the waveform drawing.

http://manoman.sqhill.com

PARTIAL A6 INTERFACE BOARD

PARTIAL A7 TIMING BOARD

S1120 HORIZ DISPLAY

B DLY'D

S1150 TIME/DIV

P2-15

CR1401

INTENSITY LIMIT

R1404 3.3K

R1406 10K +15V

R1403 5k

INTENSITY

PART OF S1403A, S1403B GANGED WITH R1529

R1402 2.7k

S400B BEAM FIND

SPRING RETURN

+65V

R498 750

P400

TO L487 DIAG

C495

TO R1266 DIAG

CR1405

R1405 7.5k

+5V

R1422 5.23k

+1.1V

R1423 1.5k

C1423 .001

RT1423 100k

R1407 2.0k

UNBLANKING FROM CR894, Q914 DIAG

P6-9

Q1424

+0.5V

R1424 15k

-8V

FROM VERT OUTPUT AMP DIAG

CHOP BLANKING FROM J359 DIAG

CR1411

CR1412

CR1427

R1427 1k

+0.8V

R1425 12.1k

+15V

Q1428

+6.2V

CR1425

R1428 100

C1432 .001

+15V

R1431 390

Q1432

CR1432

+6.2V

R1432 1k

C1433 1.0

R1433 100

+5V

C1435 0.25-1.5pF

R1434 3.83k

R1435 22.1k

C1434 0.8pF

TO R1275, R1288 DIAG 9

+140V

R1436 1k

R1437 910

+135V

Q1436

CR1439

C1437 0.1

R1439 39k

79

50 mV 1 ms

S1403A REDUCED SCAN PULL

TP1443

C1443 .0068

R1443 220

+27V

R1442 1k

CR1442

R1444 1k

C1444 .0012

CR1444

R1445 22M

CR1445

R1530 2.2M

R1529 1.5M

FOCUS TRACKING

R1525A 2.5M

R1446 10k

DS1525

DS1524

80

1 ms

CRT BIAS

+140V

R1453 10k

R1454 200 k

CR1452

C1452 0.1

CR1454

+65V

C1455 10 µF

R1455 1k

81

1 µs

TP1501

R1501 100k

-3000V*

-1470V

CR1461

CR1462

C1462 15 µF

+15V (UNREG)

T1501

F1487 1.5A FAST

L1487 80 µH

C1487 47 µF

+15.1V *

+0.4V

OV

R1508 10k

C1506 .0068

C1505 .02

CR1507

C1508 .0068

R1505 20k

K1501

S1501

CR1506

C1507 .02

R1507 1k

+65V

R1502 2M

R1522 10k

R1504 10k

C1503 .0068

R1525D 28.3609M

C1524 .0012

CR1503

C1504 .0068

R1518 750k

R1517 750k

C1517 82

R1512 1k

CR1512

C1512 .01

+600V DIAG 13

R1514 7.5

W1514

Q1492

-8V

R1492 270

SEE PARTS LIST FOR SEMICONDUCTOR TYPES.

Q1486

ORANGE

RED

BROWN

+22V

R1483 5.6k

C1483 .05

-3.4V

-3.8V

CR1477

Q1484

CR1482

R1482 100 k

+1V

R1486 4.7k

CR1486

R1473 10k

+0.5V

Q1472

R1472 2.7 k

C1473 .01

R1474 1k

C1472 1 µF

R1467 200 k

C1465 3 µF

R1464 100k

R1414 24k

R1465 316k

REDUCED SCAN HORIZ CAL

R1463 61.9k

R1525C 1.25 M

Q1476

+4.5V

-2.8V

R1477 1.2k

C1475 82

R1475 68k

+5V

R1466 10k

CR1466

EXT Z AXIS

J145

P1415

J1-5

CR1413

R1413 3k

-8V

13

TIME/DIV S1150 7

(CLOSED IN XY)

C1414 470

R1417 47

R1416 220

A8 HIGH VOLTAGE MULTIPLIER BRD

CR1582

CR1583

R1583 3M

R1584 3M

R1585 3M

R1586 3M

R1587 3M

C1582 .001

C1583 .001

C1585 .001

+7KV

V1555

L1551

A10 PARTIAL STORAGE BOARD

S1921 FAST VAR PERS

-15V

(SHOWN IN NON-STORE)

J8-5

J8-6

CR1533

R1545 3.9M

CR1543

R1538 120k

CR1535

R1542 10M

R1543 13M

R1532 6.2M

CR1536

R1547 20M

VR1533 100V

VR1532 43V

VR1527 10V

C1527 .01

R1527 2M

VERT CAL REDUCED SCAN

-110V *

-15V

FOCUS

R1525B 12.5M

C1526 .0012

R1526 2.5M

GANGED WITH R1403

-24.5V *

-23V

-2300V *

-950V

FROM HORIZ DIAG 9

FROM VERT DIAG 9

L1561

+113V *

+60V

-4V *

-2.2V

P1551

CR1552

R1552 360

R1554 2.5k

TRACE ROTATION (REDUCED SCAN)

CR1554

R1553 2k

-8V

TRACE ROTATION

CR1562

GEOM

+140V

R1556 200k

C1557 .02

C1556 .01

R1562 300

R1564 2.5k

CR1564

Y AXIS 1.5kV

P1561

-7.5V

-7.5V

R1563 2.5k

-8V

Y AXIS 3 kV REDUCED SCAN

S1403 REDUCED SCAN

PULL

+5V

+160V

W1572

P1711

P5001

PARTIAL A3 VERTICAL MODE SWITCH BOARD

+5V

P5025

REDUCED SCAN

DS1572

R1572 330

R1573 500k

ASTIG REDUCED SCAN

+15V

CR1573

ASTIG

R1574 68k

+140V

R1575 100k

C1574 .01

+15V

-1540V *

+68V 13

TP1498

+65V

R1498 12.1k

+40V

C1498 .01

C1499 .02

R1497 10k

+16V

R1495 1k

CR1497

+18.4V

Q1496

R1496 8.87k

C1494 2.2 µF

-8V

R1494 10k

R1493 22 k

-8V

COMPONENT NUMBER EXAMPLE

Component Number: A23 A2 R1234

Assembly Number — Subassembly Number (if used) — Schematic Circuit Number

Chassis-mounted components have no Assembly Number prefix—see end of Replaceable Electrical Parts List.

Static Sensitive Devices
See Maintenance Section

NOTE:

* REDUCED SCAN

(1753-91) 4796-21

REV JUL 1984

Z AXIS/CRT CIRCUIT 10

12-73

http://manoman.sghill.com

VOLTAGES AND WAVEFORM CONDITIONS

Voltages and waveforms similar to those shown on this diagram can be obtained by using the recommended test equipment and test set-ups listed below.

RECOMMENDED TEST EQUIPMENT

ITEM	SPECIFICATIONS		RECOMMENDED TYPE
OSCILLOSCOPE	Bandwidth	DC to 100 MHz	TEKTRONIX 465B Oscilloscope with P6065 or P6062B 10X probe.
	Minimum Deflection Factor	5 mV/div	
	Input Impedance	1 MΩ/20 pF	
DIGITAL MULTIMETER (For voltage up to 1 kV)	Input Impedance	10 MΩ	TEKTRONIX DM 501A.
	Range	0 to 1 kV	
DC VOLTMETER (For voltages above 1 kV)	Input Impedance	20,000 Ω/volt	TRIPLETT Model 630NA.
	Range	0 to 6 kV	

Voltages and waveforms on this diagram were obtained under the following 466 conditions, unless noted otherwise.

POWER & CRT CONTROLS

POWER	ON (pulled out)
INTENSITY	Midrange (pushed in, Full Scan)
FOCUS	Adjusted for focused trace
Storage Mode	NON STORE (pushed in)
VIEWTIME	NORM

VERTICAL CONTROLS (BOTH CHANNELS)

VOLTS/DIV	5 mV
VAR	CAL
AC-DC-GND	DC
VERT MODE	CH 1
INVERT	Out
20 MHz BW	OUT (full bandwidth)

A TRIGGER CONTROLS

A TRIGGER HOLDOFF	NORM
TRIG MODE	AUTO
COUPLING	AC
SOURCE	NORM
LEVEL	0
SLOPE	+

B TRIGGER CONTROLS

SOURCE	STARTS AFTER DELAY
COUPLING	AC
LEVEL	0
SLOPE	+

SWEEP CONTROLS

X10 MAG	Out
POSITION	Midrange
FINE	Midrange
HORIZ DISPLAY	A
DELAY TIME POSITION	0.02
A AND B TIME/DIV and DELAY TIME (Knobs Locked)	.2 ms

Signal Applied (For Waveforms Only)

The 466 Calibrator signal is applied to the CH 1 input through a compensated 10X probe.

Test Oscilloscope Vertical input is ac coupled unless noted otherwise by a 0 volt reference on the waveform drawing.

http://manoman.sqhill.com

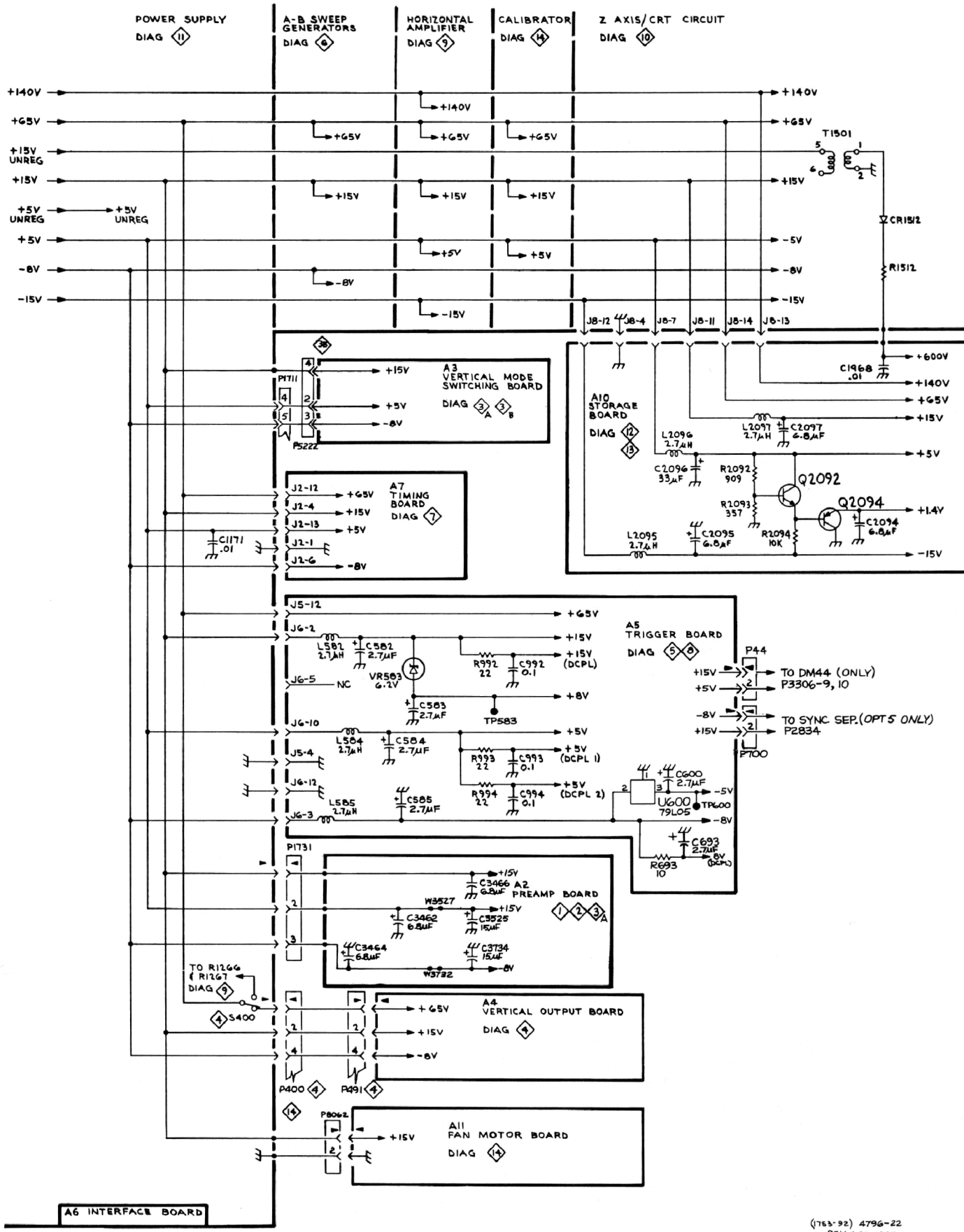

(1763-92) 4796-22
REV APR 1985

http://manoman.sqhill.com

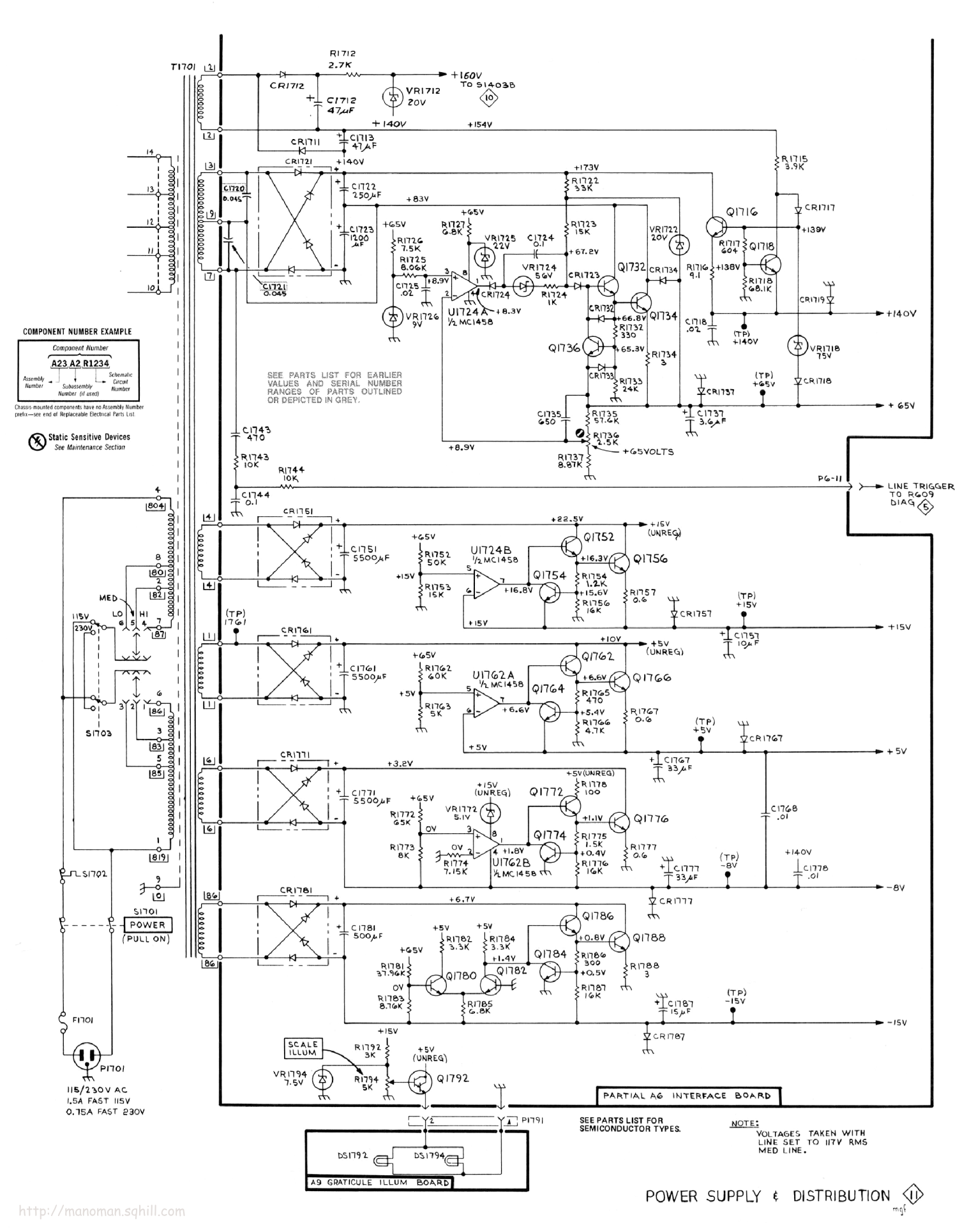

http://manoman.sqhill.com

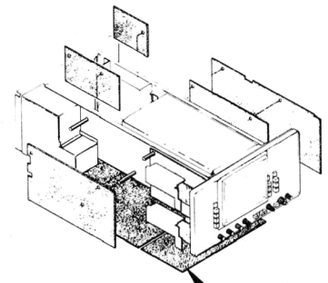

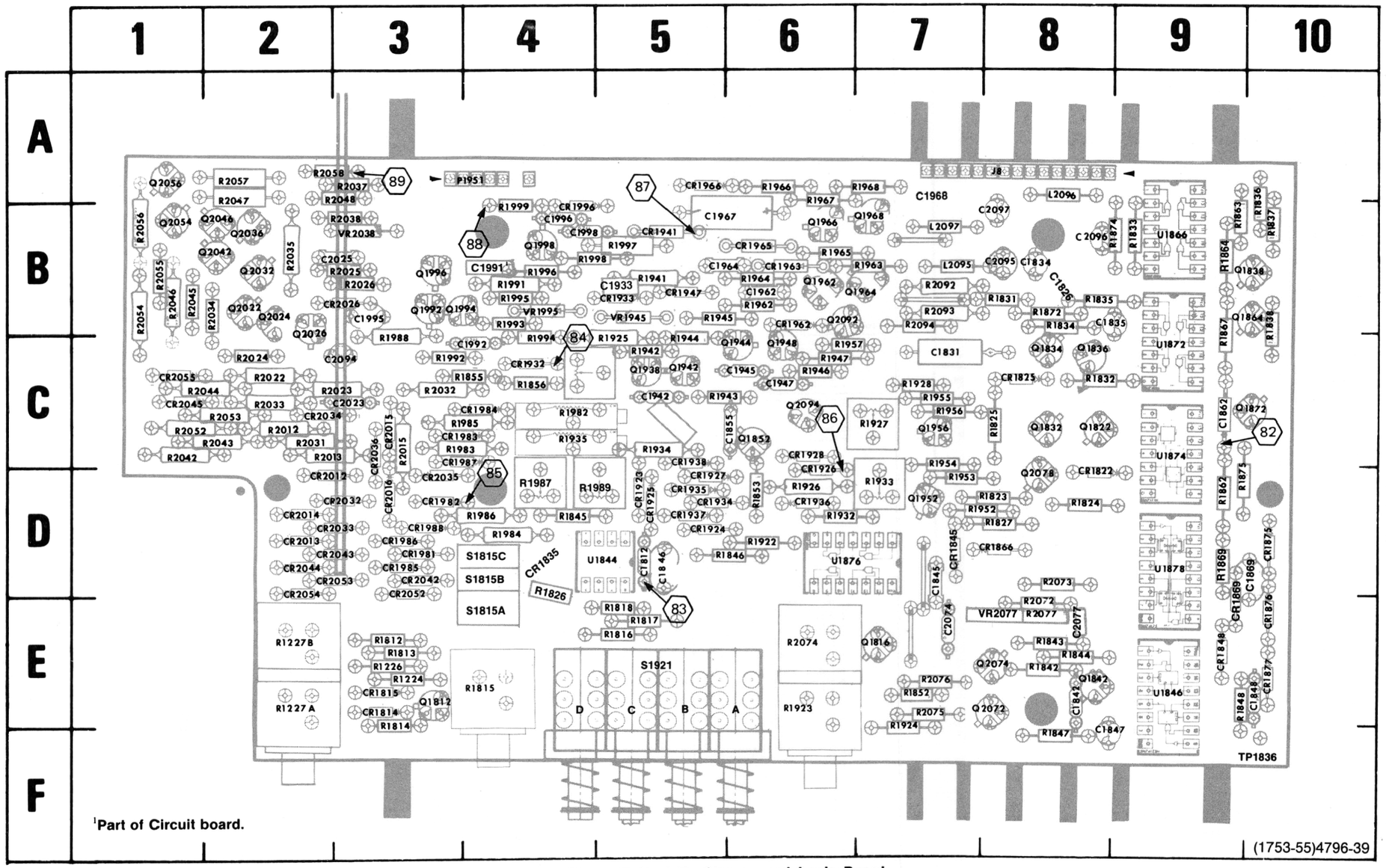

Figure 7-11. A10—Storage and Logic Board.

CKT NO	GRID LOC
R1862	9D
R1863	9B
R1864	9B
R1867	9B
R1869	9D
R1872	8B
R1874	9B
R1875	9D
R1922	6D
R1923	6E
R1924	7E
R1925	5C
R1926	6D
R1927	7C
R1928	7C
R1932	6D
R1933	7D
R1934	5C
R1935	4C
R1941	5B
R1942	5C
R1943	5C
R1944	5C
R1945	6B
R1946	6C
R1947	6C
R1952	8D
R1953	7D
R1954	7C
R1955	7C
R1956	7C
R1957	6C
R1962	6B
R1963	7B
R1964	6B
R1965	6B
R1966	6A
R1967	6B
R1968	7A
R1982	4C
R1983	4C
R1984	4D
R1985	4C
R1986	4D
R1987	4D
R1989	4D
R1988	3C
R1991	4B
R1992	3C
R1993	4B
R1994	4C
R1995	4B
R1996	4B
R1997	5B
R1998	4B
R1999	4B
R2012	2C
R2013	2C
R2015	3C
R2022	2C
R2023	3C
R2024	2C
R2025	3B
R2026	3B
R2031	2C
R2032	3C
R2033	2C
R2034	2B
R2035	2B
R2037	3A
R2038	3B
R2042	1C
R2043	2C
R2044	2C
R2045	1B
R2046	1B
R2047	2A
R2048	3A
R2052	1C
R2053	2C
R2054	1B
R2055	1B
R2056	1B
R2057	2A
R2058	2A
R2072	8E
R2073	8D
R2074	6E
R2075	7E
R2076	7E
R2077	8E
R2092	7B
R2093	7B
R2094	7B
S1815A	4E
S1815B	4D
S1815C	4D
S1921	5E
TP1836	10F
U1844	5D
U1846	9E
U1866	9B
U1872	9C
U1874	9C
U1876	6D
U1878	9D
VR1945	5B
VR1995	4B
VR2038	3B
VR2077	8E

CKT NO	GRID LOC
C1812	5D
C1826	8B
C1831	7C
C1834	8B
C1835	8B
C1842	8E
C1845	7D
C1846	5D
C1847	9F
C1848	10E
C1855	6C
C1862	9C
C1869	10D
C1933	5B
C1942	5C
C1945	6C
C1947	6C
C1962	6B
C1964	5B
C1967	5B
C1968	7A
C1991[1]	4B
C1992	4C
C1995	3B
C1996	4B
C1998	4B
C2023	3C
C2025	3B
C2074	7E
C2077	8E
C2094	3C
C2095	8B
C2096	8B
C2097	8B
CR1814	3E
CR1815	3E
CR1822	8D
CR1825	8C
CR1835	4D
CR1845	7D
CR1848	9E
CR1866	8D
CR1869	9E
CR1875	10D
CR1876	10E
CR1877	10E
CR1923	5D
CR1924	5D
CR1925	5D
CR1926	6D
CR1927	5D
CR1928	6C
CR1932	4C
CR1933	5B
CR1934	5D
CR1935	5D
CR1936	6D
CR1937	5D
CR1938	5C
CR1941	5B
CR1947	5B
CR1962	6B
CR1963	6B
CR1965	6B
CR1966	5A
CR1981	3D
CR1982	3D
CR1983	4C
CR1984	4C
CR1985	3D
CR1986	3D
CR1987	4C
CR1988	3D
CR1996	4B
CR2012	2D
CR2013	2D
CR2014	2D
CR2015	3C
CR2016	3D
CR2026	3B
CR2032	3D
CR2033	3D
CR2034	2C
CR2035	3D
CR2036	3C
CR2042	3D
CR2043	3D
CR2044	2D
CR2045	1C
CR2052	3D
CR2053	3D
CR2054	2D
CR2055	1C
J8	8A
L2095	7B
L2096	8A
L2097	7B
P1951	4A
Q1812	3E
Q1816	7E
Q1822	8C
Q1832	8C
Q1834	8C
Q1836	8C
Q1838	10B
Q1842	8E
Q1852	6C
Q1864	10B
Q1872	10C
Q1938	5C
Q1942	5C
Q1944	6C
Q1948	6C
Q1952	7D
Q1956	7C
Q1962	6B
Q1964	7B
Q1966	6B
Q1968	7B
Q1992	3B
Q1994	3B
Q1996	3B
Q1998	4B
Q2026	2B
Q2032	2B
Q2036	2B
Q2042	2B
Q2046	2B
Q2054	1B
Q2056	1A
Q2072	8E
Q2074	8E
Q2078	8D
Q2092	6B
Q2094	6C
R1224	3E
R1226	3E
R1227A	2E
R1227B	2E
R1812	3E
R1813	3E
R1814	3E
R1815	4E
R1816	5E
R1817	5E
R1818	5E
R1823	8D
R1824	8D
R1825	8C
R1826	4D
R1827	8D
R1831	8B
R1832	8C
R1833	9B
R1834	8B
R1835	8B
R1836	10B
R1837	10B
R1838	10B
R1842	8E
R1843	8E
R1844	8E
R1845	4D
R1846	6D
R1847	8F
R1848	9E
R1852	7E
R1853	6D
R1855	4C
R1856	4C

[1]Part of Circuit board.

http://manoman.sqhill.com

VOLTAGES AND WAVEFORM CONDITIONS

Voltages and waveforms similar to those shown on this diagram can be obtained by using the recommended test equipment and test set-ups listed below.

RECOMMENDED TEST EQUIPMENT

ITEM	SPECIFICATIONS		RECOMMENDED TYPE
OSCILLOSCOPE	Bandwidth	DC to 100 MHz	TEKTRONIX 465B Oscilloscope with P6065 or P6062B 10X probe.
	Minimum Deflection Factor	5 mV/div	
	Input Impedance	1 MΩ/20 pF	
DIGITAL MULTIMETER (For voltage up to 1 kV)	Input Impedance	10 MΩ	TEKTRONIX DM 501A.
	Range	0 to 1 kV	
DC VOLTMETER (For voltages above 1 kV)	Input Impedance	20,000 Ω/volt	TRIPLETT Model 630NA.
	Range	0 to 6 kV	

Voltages and waveforms on this diagram were obtained under the following 466 conditions, unless noted otherwise.

POWER & CRT CONTROLS

POWER	ON (pulled out)
INTENSITY	Midrange (pushed in, Full Scan)
FOCUS	Adjusted for focused trace
Storage Mode	NON STORE (pushed in)
VIEWTIME	NORM

VERTICAL CONTROLS (BOTH CHANNELS)

VOLTS/DIV	5 mV
VAR	CAL
AC-DC-GND	DC
VERT MODE	CH 1
INVERT	Out
20 MHz BW	OUT (full bandwidth)

A TRIGGER CONTROLS

A TRIGGER HOLDOFF	NORM
TRIG MODE	AUTO
COUPLING	AC
SOURCE	NORM
LEVEL	0
SLOPE	+

SWEEP CONTROLS

X10 MAG	Out
POSITION	Midrange
FINE	Midrange
HORIZ DISPLAY	A
DELAY TIME POSITION	0.02
A AND B TIME/DIV and DELAY TIME (Knobs Locked)	.2 ms

Signal Applied (For Waveforms Only)

The 466 Calibrator signal is applied to the CH 1 input through a compensated 10X probe.

Test Oscilloscope Vertical input is ac coupled unless noted otherwise by a 0 volt reference on the waveform drawing.

http://manoman.sqhill.com

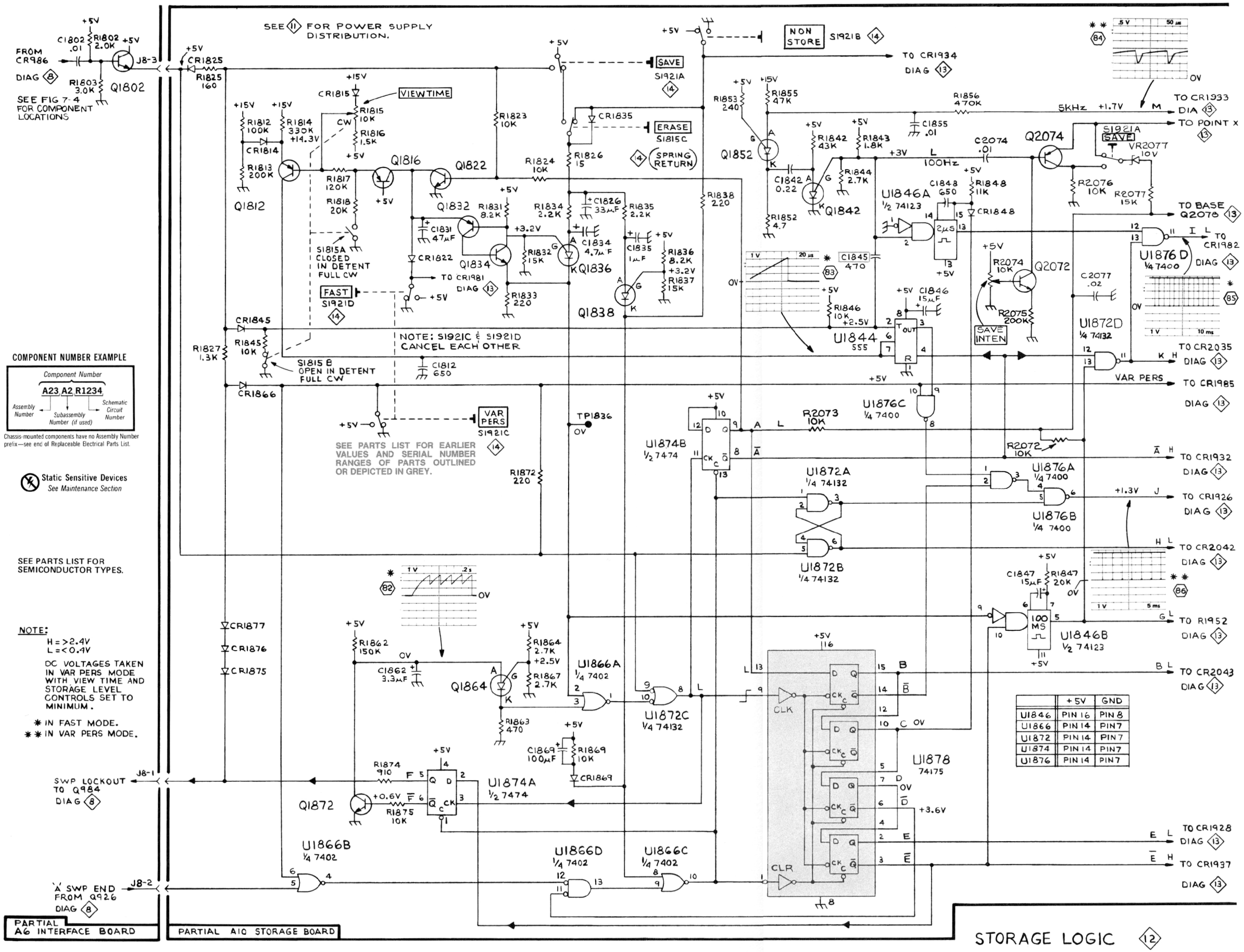

	+5V	GND
U1846	PIN 16	PIN 8
U1866	PIN 14	PIN 7
U1872	PIN 14	PIN 7
U1874	PIN 14	PIN 7
U1876	PIN 14	PIN 7

COMPONENT NUMBER EXAMPLE

Component Number: A23 A2 R1234

Assembly Number — Subassembly Number (if used) — Schematic Circuit Number

Chassis-mounted components have no Assembly Number prefix—see end of Replaceable Electrical Parts List.

Static Sensitive Devices
See Maintenance Section

SEE PARTS LIST FOR SEMICONDUCTOR TYPES.

NOTE:
H = >2.4V
L = <0.4V
DC VOLTAGES TAKEN IN VAR PERS MODE WITH VIEW TIME AND STORAGE LEVEL CONTROLS SET TO MINIMUM.
* IN FAST MODE.
** IN VAR PERS MODE.

STORAGE LOGIC 12

(1753-93) 4796-23
REV MAY 1986

http://manoman.sqhill.com

VOLTAGES AND WAVEFORM CONDITIONS

Voltages and waveforms similar to those shown on this diagram can be obtained by using the recommended test equipment and test set-ups listed below.

RECOMMENDED TEST EQUIPMENT

ITEM	SPECIFICATIONS		RECOMMENDED TYPE
OSCILLOSCOPE	Bandwidth	DC to 100 MHz	TEKTRONIX 465B Oscilloscope with P6065 or P6062B 10X probe.
	Minimum Deflection Factor	5 mV/div	
	Input Impedance	1 MΩ/20 pF	
DIGITAL MULTIMETER (For voltage up to 1 kV)	Input Impedance	10 MΩ	TEKTRONIX DM 501A.
	Range	0 to 1 kV	
DC VOLTMETER (For voltages above 1 kV)	Input Impedance	20,000 Ω/volt	TRIPLETT Model 630NA.
	Range	0 to 6 kV	

Voltages and waveforms on this diagram were obtained under the following 466 conditions, unless noted otherwise.

POWER & CRT CONTROLS

POWER	ON (pulled out)
INTENSITY	Midrange (pushed in, Full Scan)
FOCUS	Adjusted for focused trace
Storage Mode	NON STORE (pushed in)
VIEWTIME	NORM

VERTICAL CONTROLS (BOTH CHANNELS)

VOLTS/DIV	5 mV
VAR	CAL
AC-DC-GND	DC
VERT MODE	CH 1
INVERT	Out
20 MHz BW	OUT (full bandwidth)

A TRIGGER CONTROLS

A TRIGGER HOLDOFF	NORM
TRIG MODE	AUTO
COUPLING	AC
SOURCE	NORM
LEVEL	0
SLOPE	+

B TRIGGER CONTROLS

SOURCE	STARTS AFTER DELAY
COUPLING	AC
LEVEL	0
SLOPE	+

SWEEP CONTROLS

X10 MAG	Out
POSITION	Midrange
FINE	Midrange
HORIZ DISPLAY	A
DELAY TIME POSITION	0.02
A AND B TIME/DIV and DELAY TIME (Knobs Locked)	.2 ms

Signal Applied (For Waveforms Only)

The 466 Calibrator signal is applied to the CH 1 input through a compensated 10X probe.

Test Oscilloscope Vertical input is ac coupled unless noted otherwise by a 0 volt reference on the waveform drawing.

http://manoman.sqhill.com

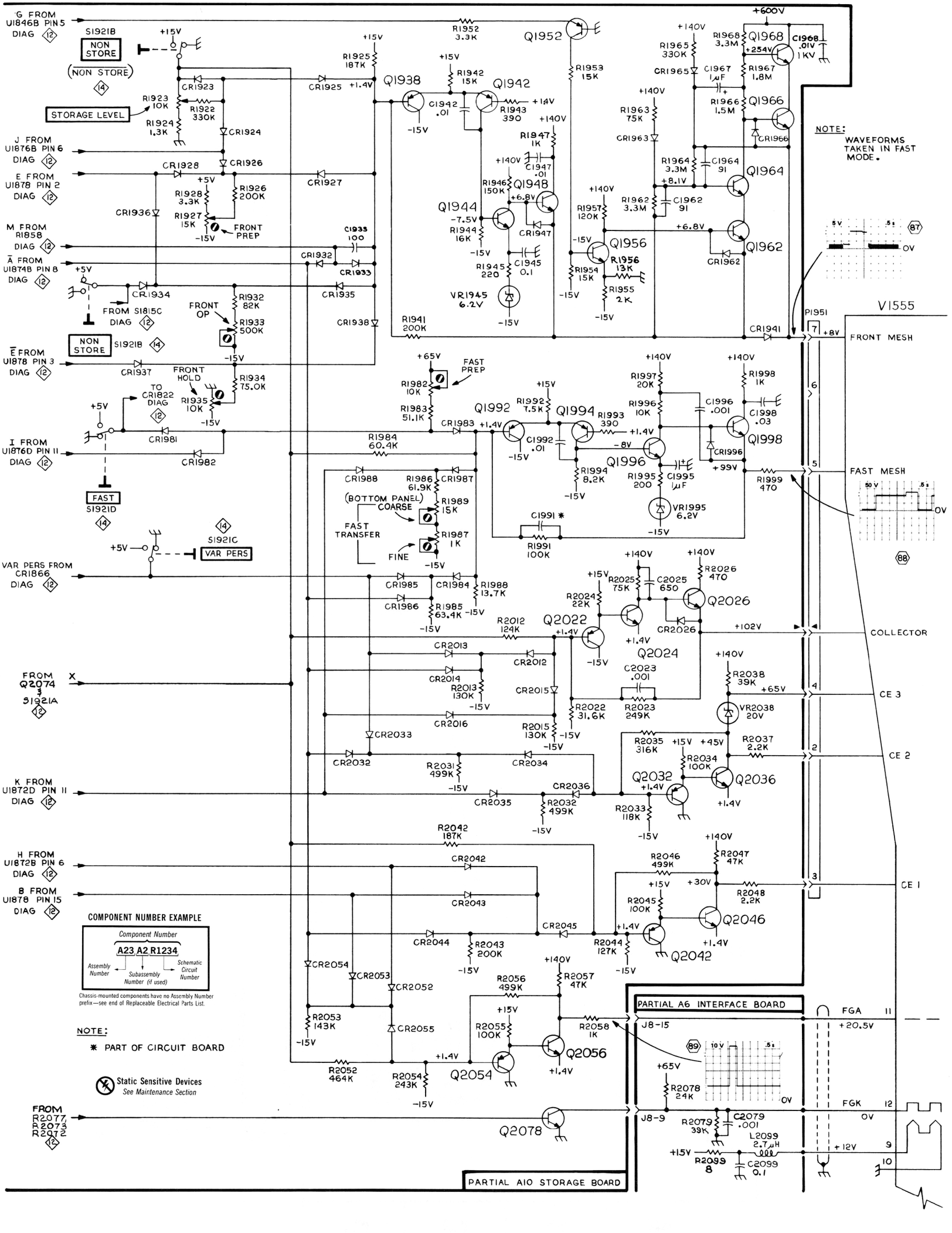

http://manoman.sqhill.com

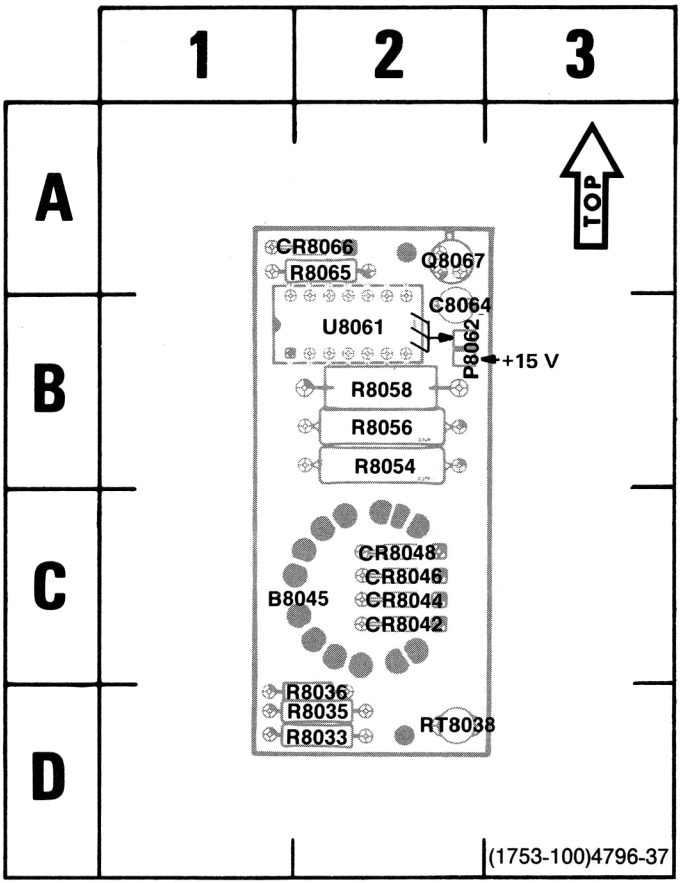

Figure 7-12. A11—Fan Motor Board.

CKT NO	GRID LOC	CKT NO	GRID LOC
B8045	1C	R8033	2D
		R8035	2D
C8064	2B	R8036	2D
		R8054	2B
CR8042	2C	R8056	2B
CR8044	2C	R8058	2B
CR8046	2C	R8065	2A
CR8048	2C		
CR8066	2A	RT8038	2D
P8062	2B	U8061	2B
Q8067	2A		

CAUTION

Observe and note orientation of P8062 before disconnecting it from A11 board. Index mark may be incorrect on some boards.

http://manoman.sqhill.com

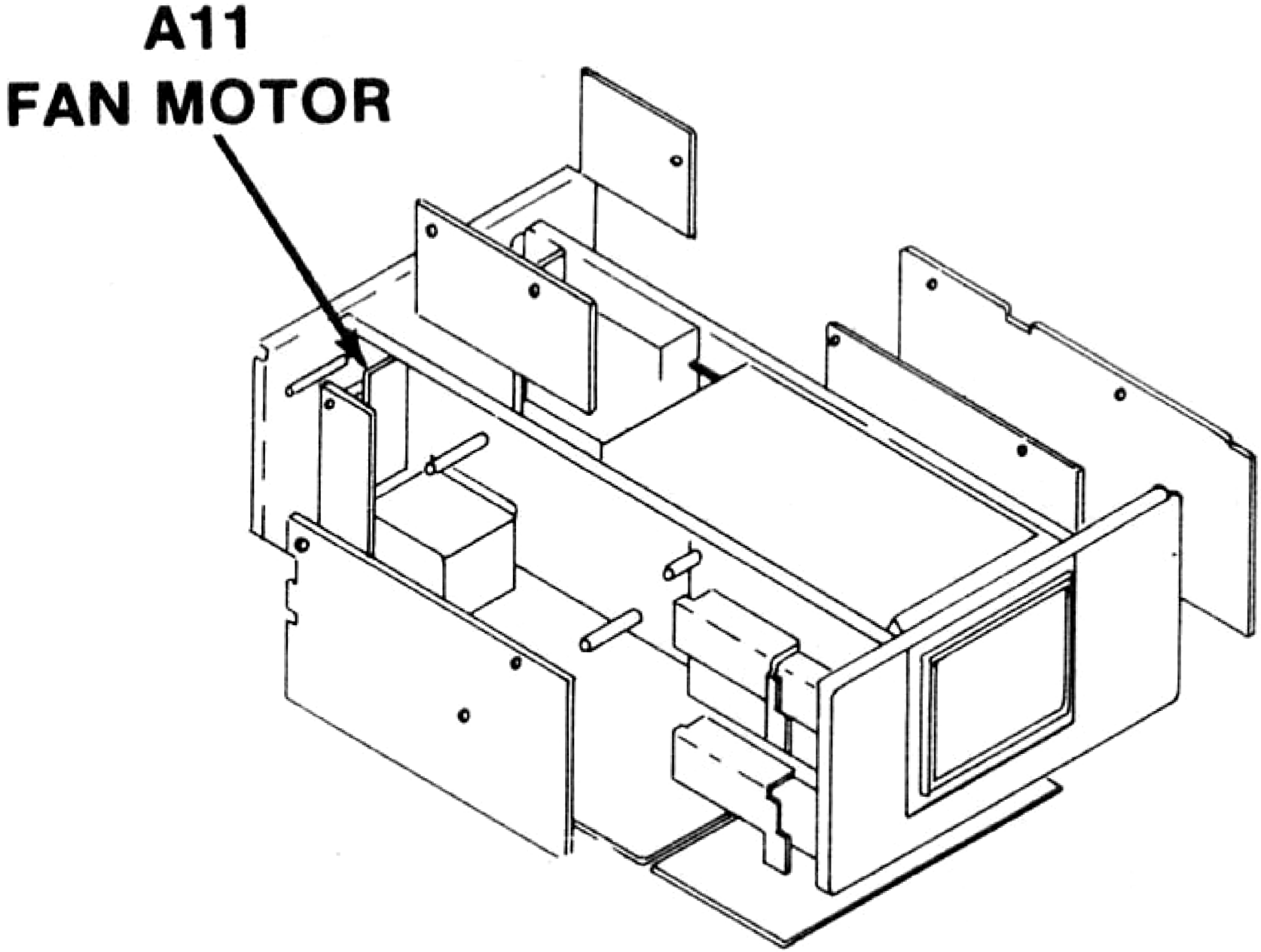

http://manoman.sqhill.com

VOLTAGES AND WAVEFORM CONDITIONS

Voltages and waveforms similar to those shown on this diagram can be obtained by using the recommended test equipment and test set-ups listed below.

RECOMMENDED TEST EQUIPMENT

ITEM	SPECIFICATIONS		RECOMMENDED TYPE
OSCILLOSCOPE	Bandwidth	DC to 100 MHz	TEKTRONIX 465B Oscilloscope with P6065 or P6062B 10X probe.
	Minimum Deflection Factor	5 mV/div	
	Input Impedance	1 MΩ/20 pF	
DIGITAL MULTIMETER (For voltage up to 1 kV)	Input Impedance	10 MΩ	TEKTRONIX DM 501A.
	Range	0 to 1 kV	
DC VOLTMETER (For voltages above 1 kV)	Input Impedance	20,000 Ω/volt	TRIPLETT Model 630NA.
	Range	0 to 6 kV	

Voltages and waveforms on this diagram were obtained under the following 466 conditions, unless noted otherwise.

POWER & CRT CONTROLS

POWER	ON (pulled out)
INTENSITY	Midrange (pushed in, Full Scan)
FOCUS	Adjusted for focused trace
Storage Mode	NON STORE (pushed in)
VIEWTIME	NORM

VERTICAL CONTROLS (BOTH CHANNELS)

VOLTS/DIV	5 mV
VAR	CAL
AC-DC-GND	DC
VERT MODE	CH 1
INVERT	Out
20 MHz BW	OUT (full bandwidth)

A TRIGGER CONTROLS

A TRIGGER HOLDOFF	NORM
TRIG MODE	AUTO
COUPLING	AC
SOURCE	NORM
LEVEL	0
SLOPE	+

B TRIGGER CONTROLS

SOURCE	STARTS AFTER DELAY
COUPLING	AC
LEVEL	0
SLOPE	+

SWEEP CONTROLS

X10 MAG	Out
POSITION	Midrange
FINE	Midrange
HORIZ DISPLAY	A
DELAY TIME POSITION	0.02
A AND B TIME/DIV and DELAY TIME (Knobs Locked)	.2 ms

Signal Applied (For Waveforms Only)

The 466 Calibrator signal is applied to the CH 1 input through a compensated 10X probe.

Test Oscilloscope Vertical input is ac coupled unless noted otherwise by a 0 volt reference on the waveform drawing.

http://manoman.sqhill.com

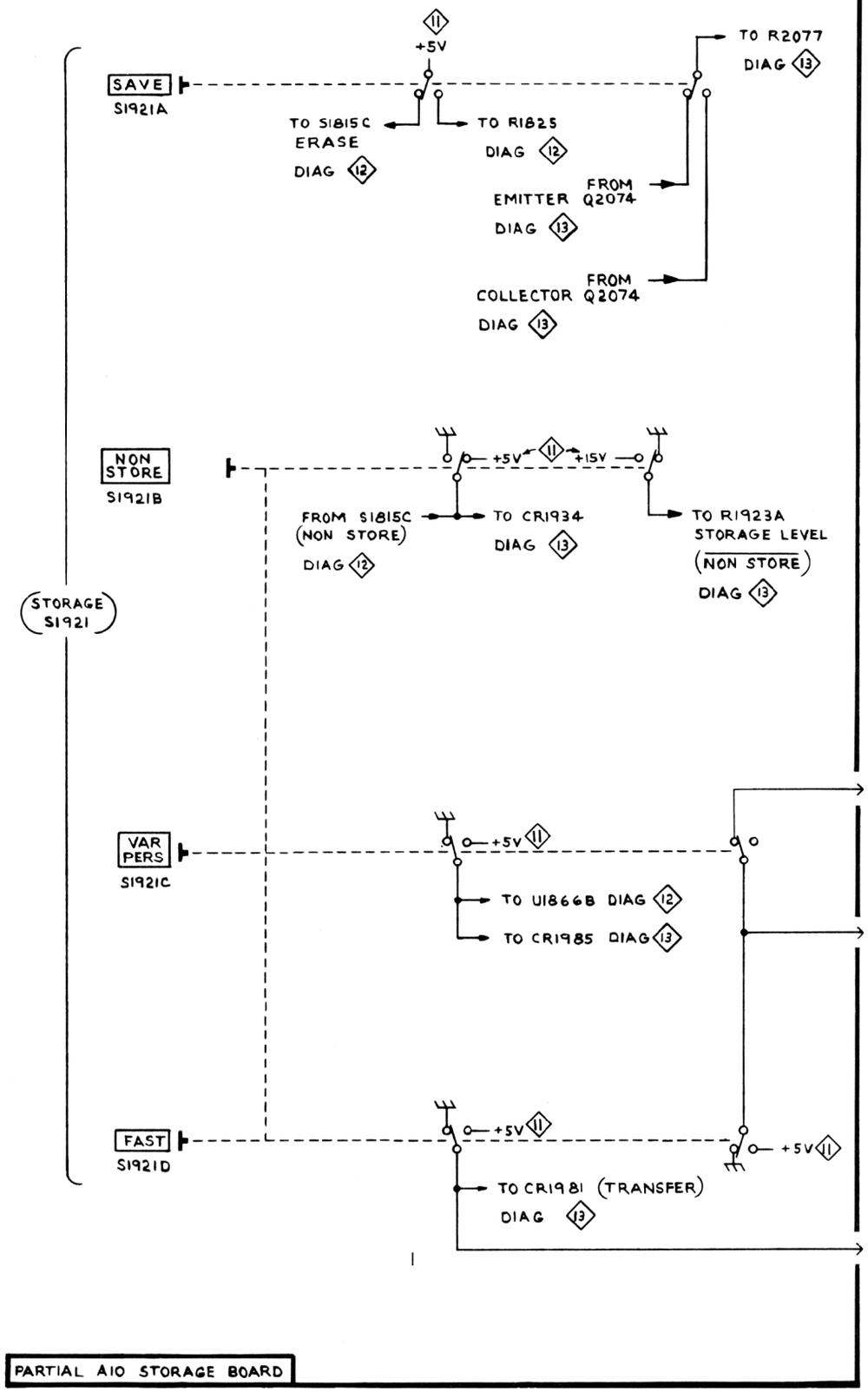

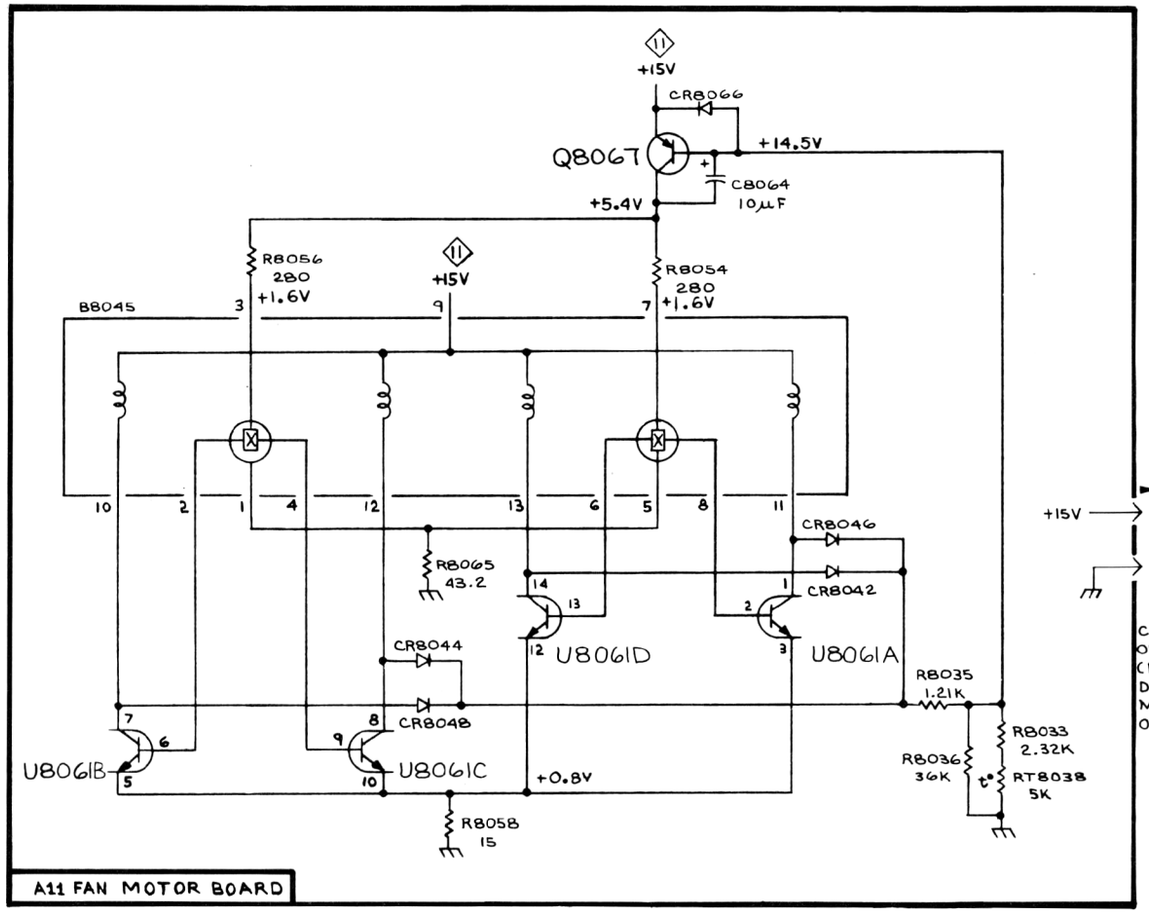

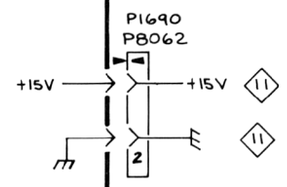

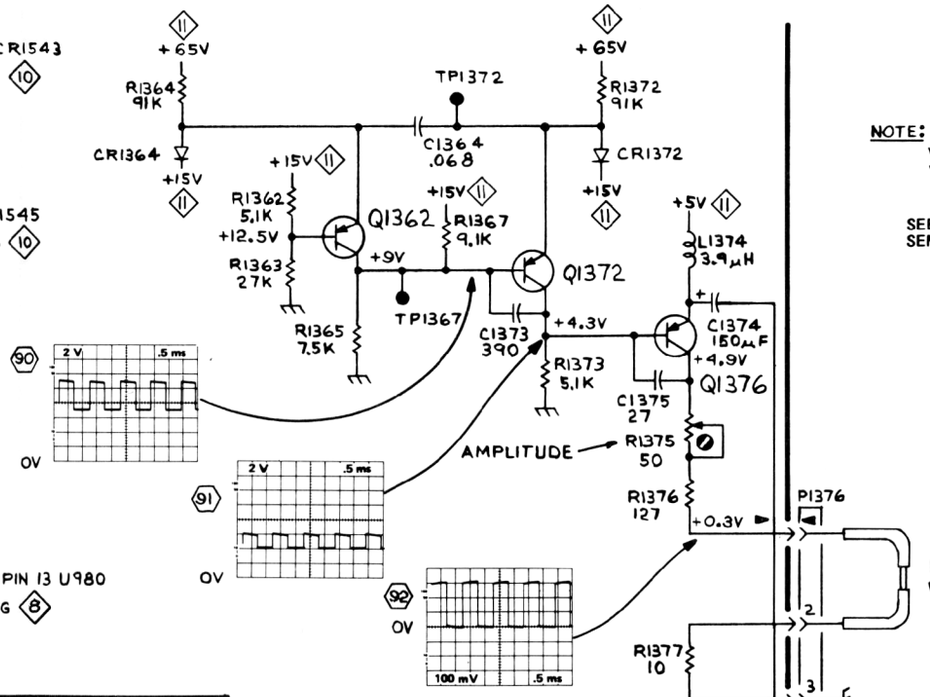

Static Sensitive Devices
See Maintenance Section

NOTE:
VOLTAGES TAKEN WITH Q1372 REMOVED.

SEE PARTS LIST FOR SEMICONDUCTOR TYPES.

COMPONENT NUMBER EXAMPLE

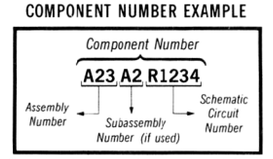

Chassis-mounted components have no Assembly Number prefix—see end of Replaceable Electrical Parts List.

(1753-95) 4796-25

STORAGE SWITCH, FAN MOTOR & CALIBRATOR 14

http://manoman.sqhill.com

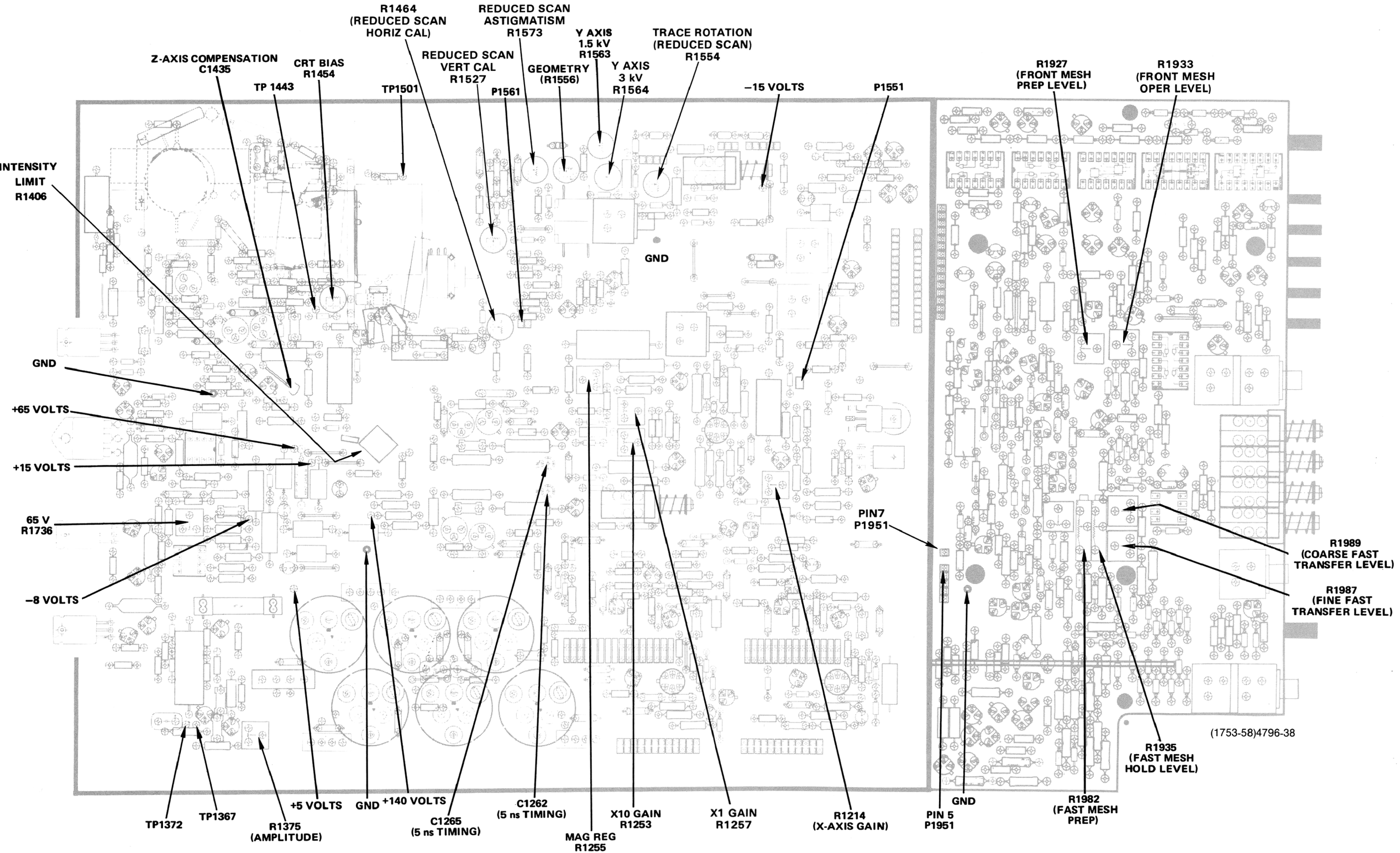

Main Interface circuit board adjustment locations.

Storage circuit board adjustment locations.

Figure 7-13. A6—Interface, A10—Storage Logic Adjustment Locations 1.

http://manoman.sqhill.com

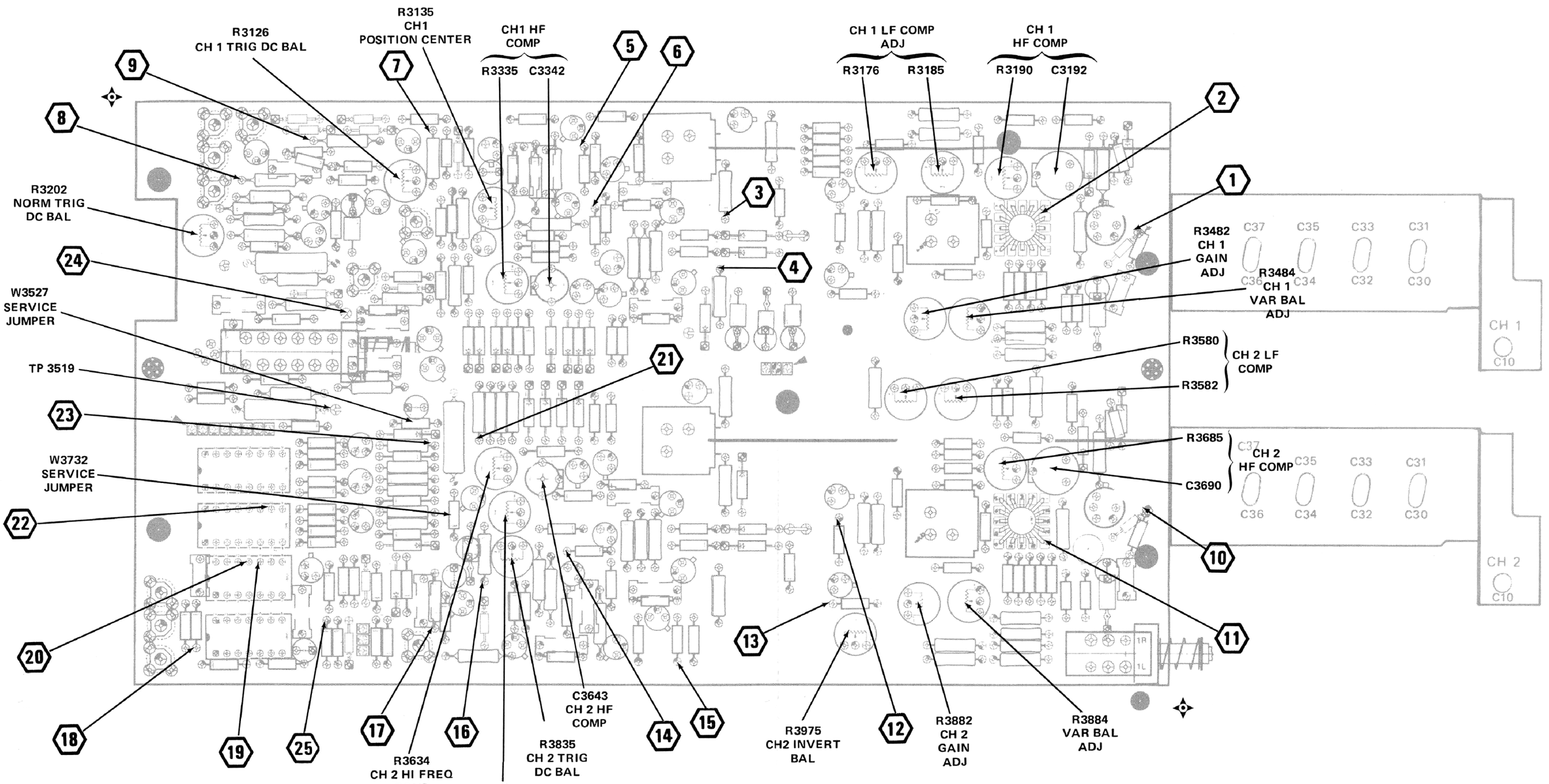

A2 Vertical Preamplifier board.

REV JUL 1984

Figure 7-14. A2—Vertical Preamp, A4—Vertical Output Adjustment Locations 2.

http://manoman.sghill.com

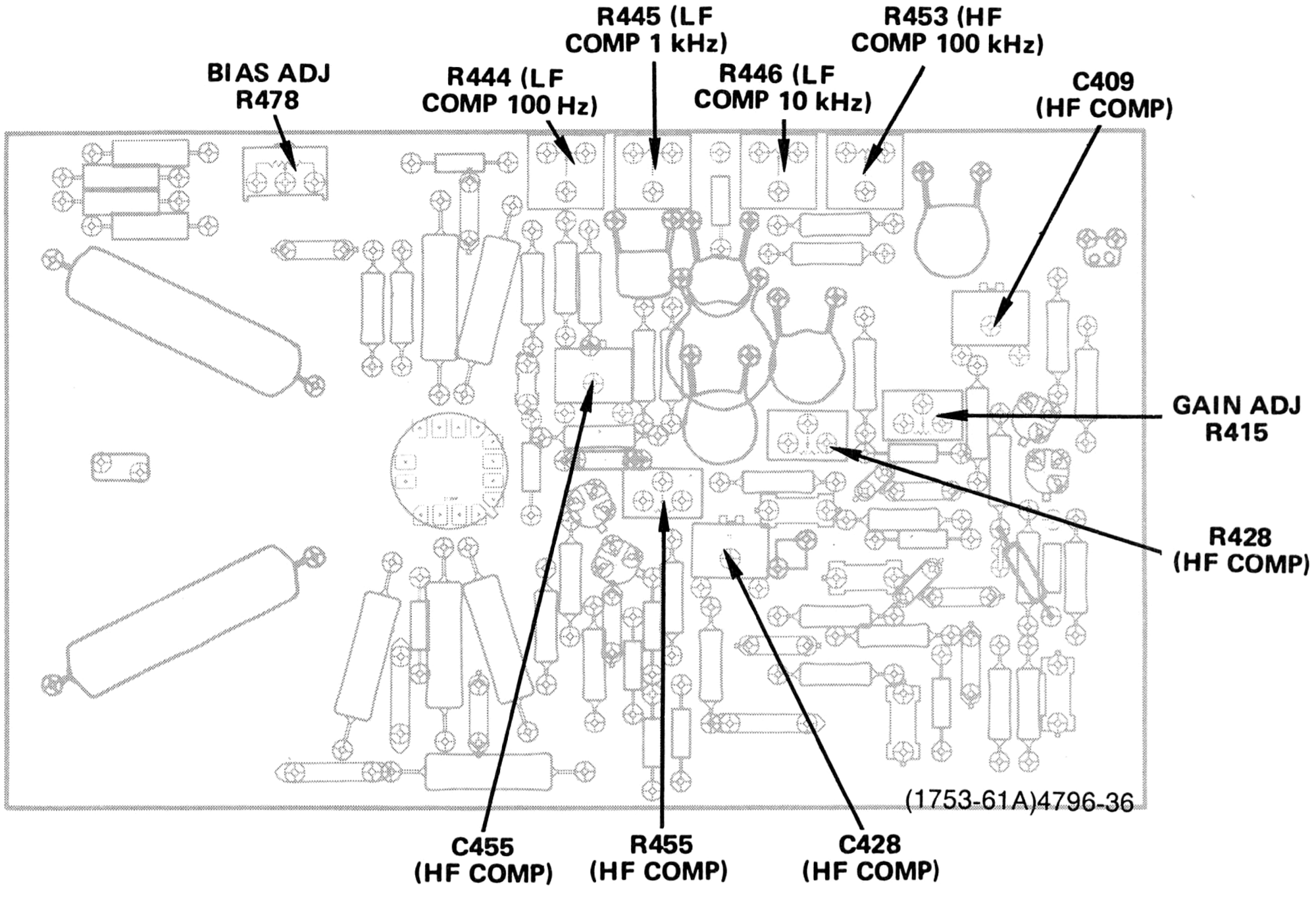

Vertical Output circuit board adjustment locations.

http://manoman.sqhill.com

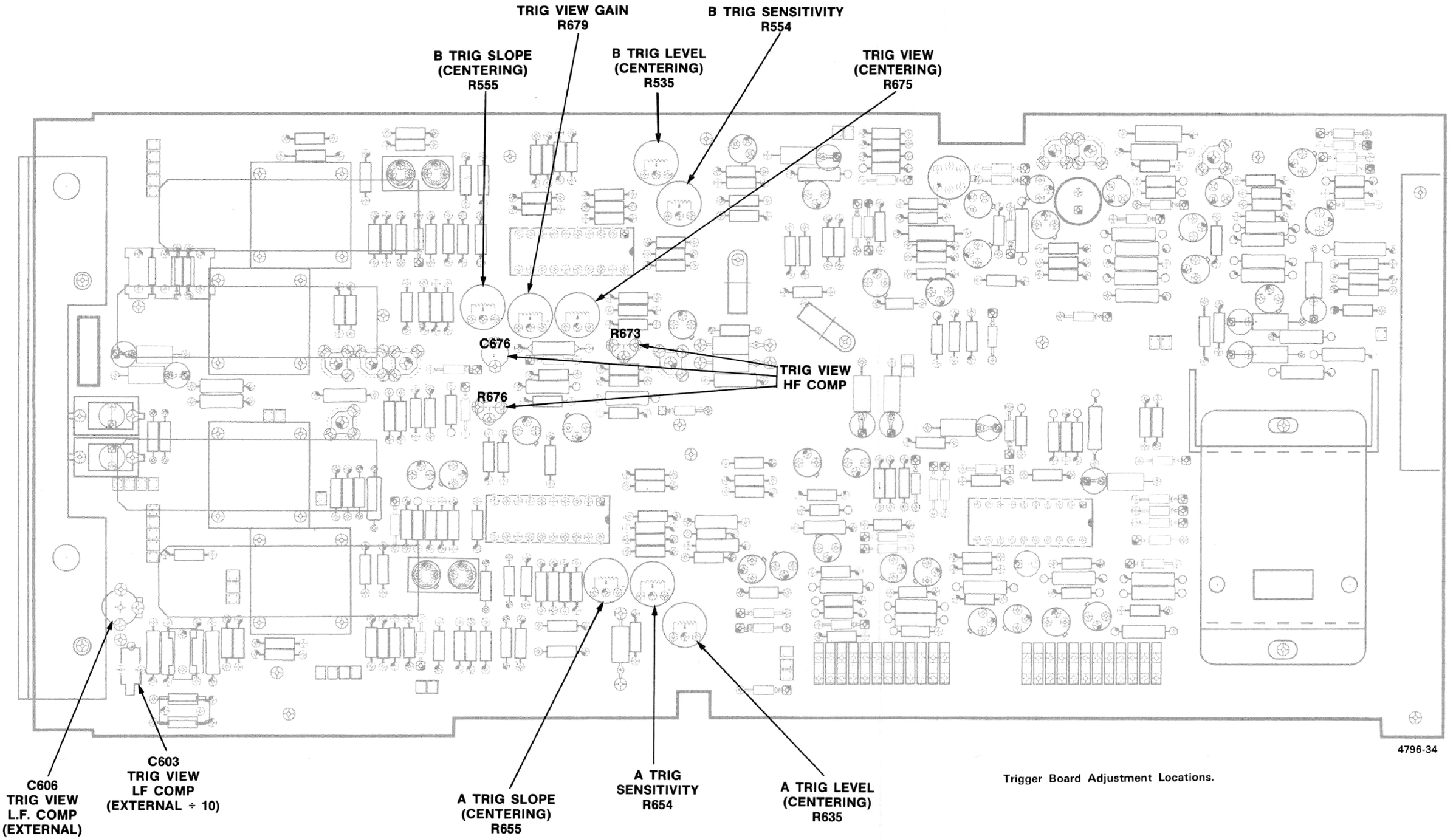

Trigger Board Adjustment Locations.

http://manoman.sqhill.com

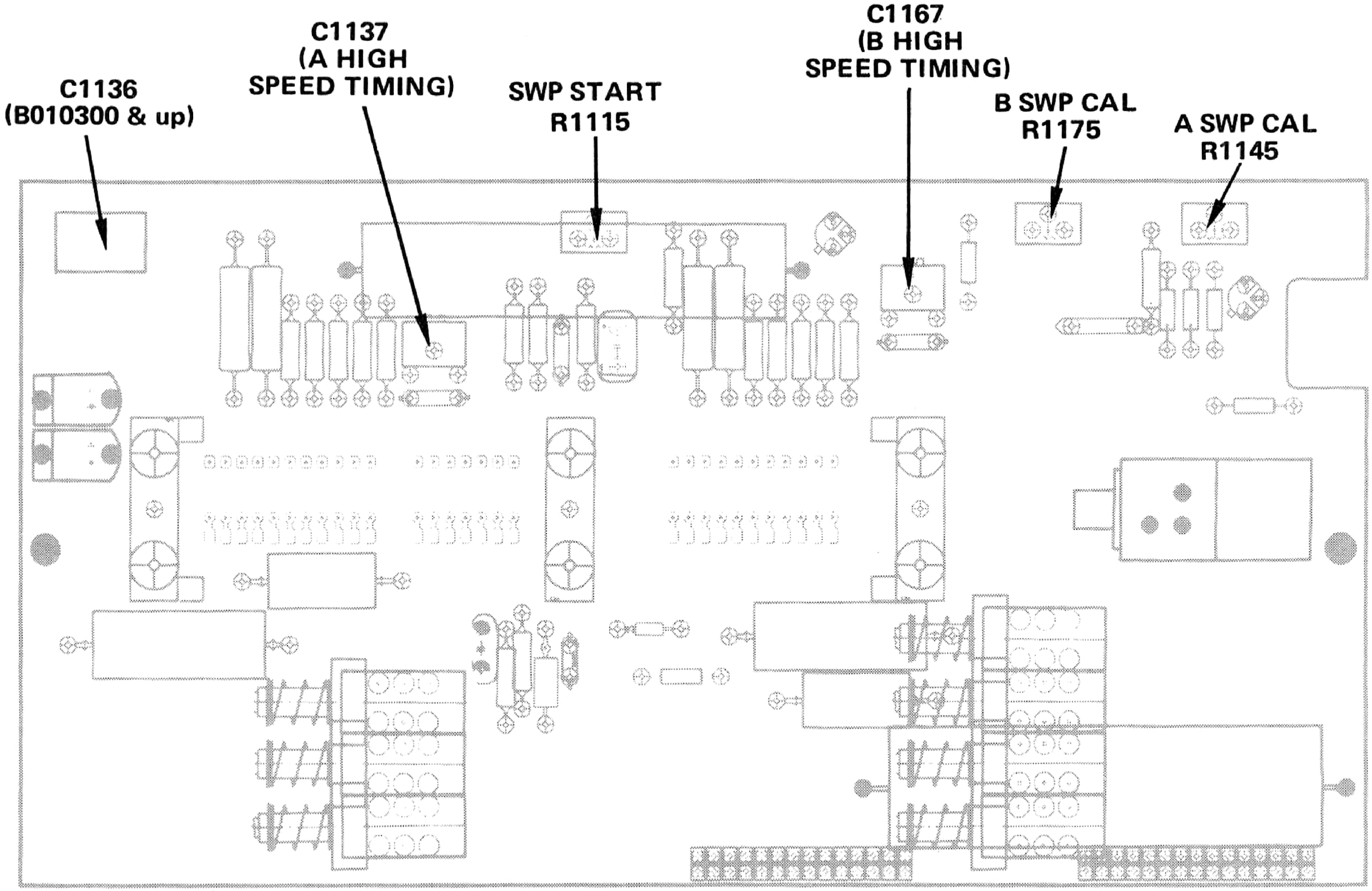

(1753-68)4796-49

Timing circuit board adjustment locations.

http://manoman.sqhill.com

REPLACEABLE MECHANICAL PARTS

PARTS ORDERING INFORMATION

Replacement parts are available from or through your local Tektronix, Inc. Field Office or representative.

Changes to Tektronix instruments are sometimes made to accommodate improved components as they become available, and to give you the benefit of the latest circuit improvements developed in our engineering department. It is therefore important, when ordering parts, to include the following information in your order: Part number, instrument type or number, serial number, and modification number if applicable.

If a part you have ordered has been replaced with a new or improved part, your local Tektronix, Inc. Field Office or representative will contact you concerning any change in part number.

Change information, if any, is located at the rear of this manual.

ITEM NAME

In the Parts List, an Item Name is separated from the description by a colon (:). Because of space limitations, an Item Name may sometimes appear as incomplete. For further Item Name identification, the U.S. Federal Cataloging Handbook H6-1 can be utilized where possible.

FIGURE AND INDEX NUMBERS

Items in this section are referenced by figure and index numbers to the illustrations.

INDENTATION SYSTEM

This mechanical parts list is indented to indicate item relationships. Following is an example of the indentation system used in the description column.

1 2 3 4 5	*Name & Description*
	Assembly and/or Component
	Attaching parts for Assembly and/or Component
	····END ATTACHING PARTS····
	Detail Part of Assembly and/or Component
	Attaching parts for Detail Part
	····END ATTACHING PARTS····
	Parts of Detail Part
	Attaching parts for Parts of Detail Part
	····END ATTACHING PARTS····

Attaching Parts always appear in the same indentation as the item it mounts, while the detail parts are indented to the right. Indented items are part of, and included with, the next higher indentation.

Attaching parts must be purchased separately, unless otherwise specified.

ABBREVIATIONS

"	INCH
#	NUMBER SIZE
ACTR	ACTUATOR
ADPTR	ADAPTER
ALIGN	ALIGNMENT
AL	ALUMINUM
ASSEM	ASSEMBLED
ASSY	ASSEMBLY
ATTEN	ATTENUATOR
AWG	AMERICAN WIRE GAGE
BD	BOARD
BRKT	BRACKET
BRS	BRASS
BRZ	BRONZE
BSHG	BUSHING
CAB	CABINET
CAP	CAPACITOR
CER	CERAMIC
CHAS	CHASSIS
CKT	CIRCUIT
COMP	COMPOSITION
CONN	CONNECTOR
COV	COVER
CPLG	COUPLING
CRT	CATHODE RAY TUBE
DEG	DEGREE
DWR	DRAWER
ELCTRN	ELECTRON
ELEC	ELECTRICAL
ELCTLT	ELECTROLYTIC
ELEM	ELEMENT
EPL	ELECTRICAL PARTS LIST
EQPT	EQUIPMENT
EXT	EXTERNAL
FIL	FILLISTER HEAD
FLEX	FLEXIBLE
FLH	FLAT HEAD
FLTR	FILTER
FR	FRAME or FRONT
FSTNR	FASTENER
FT	FOOT
FXD	FIXED
GSKT	GASKET
HDL	HANDLE
HEX	HEXAGON
HEX HD	HEXAGONAL HEAD
HEX SOC	HEXAGONAL SOCKET
HLCPS	HELICAL COMPRESSION
HLEXT	HELICAL EXTENSION
HV	HIGH VOLTAGE
IC	INTEGRATED CIRCUIT
ID	INSIDE DIAMETER
IDENT	IDENTIFICATION
IMPLR	IMPELLER
IN	INCH
INCAND	INCANDESCENT
INSUL	INSULATOR
INTL	INTERNAL
LPHLDR	LAMPHOLDER
MACH	MACHINE
MECH	MECHANICAL
MTG	MOUNTING
NIP	NIPPLE
NON WIRE	NOT WIRE WOUND
OBD	ORDER BY DESCRIPTION
OD	OUTSIDE DIAMETER
OVH	OVAL HEAD
PH BRZ	PHOSPHOR BRONZE
PL	PLAIN or PLATE
PLSTC	PLASTIC
PN	PART NUMBER
PNH	PAN HEAD
PWR	POWER
RCPT	RECEPTACLE
RES	RESISTOR
RGD	RIGID
RLF	RELIEF
RTNR	RETAINER
SCH	SOCKET HEAD
SCOPE	OSCILLOSCOPE
SCR	SCREW
SE	SINGLE END
SECT	SECTION
SEMICOND	SEMICONDUCTOR
SHLD	SHIELD
SHLDR	SHOULDERED
SKT	SOCKET
SL	SLIDE
SLFLKG	SELF-LOCKING
SLVG	SLEEVING
SPR	SPRING
SQ	SQUARE
SST	STAINLESS STEEL
STL	STEEL
SW	SWITCH
T	TUBE
TERM	TERMINAL
THD	THREAD
THK	THICK
TNSN	TENSION
TPG	TAPPING
TRH	TRUSS HEAD
V	VOLTAGE
VAR	VARIABLE
W/	WITH
WSHR	WASHER
XFMR	TRANSFORMER
XSTR	TRANSISTOR

http://manoman.sqhill.com

CROSS INDEX - MFR. CODE NUMBER TO MANUFACTURER

Mfr. Code	Manufacturer	Address	City, State, Zip Code
00779	AMP INC	2800 FULLING MILL PO BOX 3608	HARRISBURG PA 17105
01536	TEXTRON INC CAMCAR DIV SEMS PRODUCTS UNIT	1818 CHRISTINA ST	ROCKFORD IL 61108
01963	CHERRY ELECTRICAL PRODUCTS CORP	3600 SUNSET AVE	WAUKEGAN IL 60087-3214
04811	PRECISION COIL SPRING CO	10107 ROSE ST P O BOX 5450	EL MONTE CA 91734
05006	20TH CENTURY PLASTICS INC	3628 CRENSHAW BLVD PO BOX 30231	LOS ANGELES CA 90030
05129	KILO ENGINEERING CO	2118 D ST	LA VERNE CA 91750-5422
06383	PANDUIT CORP	17301 RIDGELAND	TINLEY PARK IL 07094-2917
06950	SCREWCORP VSI AEROSPACE PRODUCTS DIV SUB OF FAIRCHILD INDUSTRIES INC	13001 E TEMPLE AVE PO BOX 730	CITY OF INDUSTRY CA 91746-1417
07416	NELSON NAME PLATE CO	3191 CASITAS	LOS ANGELES CA 90039-2410
07700	TECHNICAL WIRE PRODUCTS INC DBA TECKNIT INC	129 DERMODY ST	CRANFORD NJ 07016-3217
08530	RELIANCE MICA CORP	341-39TH ST	BROOKLYN NY 11212-2903
09353	C AND K COMPONENTS INC	15 RIVERDALE AVE	NEWTON MA 02158-1057
09772	WEST COAST LOCKWASHER CO INC	16730 E JOHNSON DRIVE P O BOX 3588	CITY OF INDUSTRY CA 91744
09922	BURNDY CORP	RICHARDS AVE	NORWALK CT 06852
10392	GENERAL STAPLE CO INC	59-12 37TH ST	WOODSIDE NY 11377-2523
12327	FREEWAY CORP	9301 ALLEN DR	CLEVELAND OH 44125-4632
12360	ALBANY FASTENERS PAWTUCKET FASTERNER DIV	327 PINE ST PO BOX 879	PAWTUCKET RI 02862
13511	AMPHENOL CADRE DIV BUNKER RAMO CORP		LOS GATOS CA
16428	COOPER BELDEN ELECTRONIC WIRE AND CA SUB OF COOPER INDUSTRIES INC	NW N ST	RICHMOND IN 47374
22526	DU PONT E I DE NEMOURS AND CO INC DU PONT CONNECTOR SYSTEMS DIV MILITARY PRODUCTS GROUP	515 FISHING CREEK RD	NEW CUMBERLAND PA 17070-3007
22670	G M NAMEPLATE INC	2040 15TH AVE WEST	SEATTLE WA 98119-2728
24546	CORNING GLASS WORKS	550 HIGH ST	BRADFORD PA 16701-3737
24931	SPECIALTY CONNECTOR CO INC	2100 EARLYWOOD DR PO BOX 547	FRANKLIN IN 46131
26233	NYLOK FASTENER CORP	1161 E SANDHILL AVE SUITE D PO BOX 5228	CARSON CA 90749
28520	HEYCO MOLDED PRODUCTS	750 BOULEVARD P O BOX 160	KENILWORTH NJ 07033-1721
56878	SPS TECHNOLOGIES INC AEROSPACE & INDUSTRIAL PRODUCTS INC	HIGHLAND AVE	JENKINTOWN PA 19046
70278	ALLIED STEEL AND CONVEYORS, DIV. OF SPARTON CORP.	17333 HEALY	DETROIT, MI 48212
70318	ALLMETAL SCREW PRODUCTS CO INC	821 STEWART AVE	GARDEN CITY NY 11530-4810
70903	COOPER BELDEN ELECTRONICS WIRE AND C SUB OF COOPER INDUSTRIES INC	2000 S BATAVIA AVE	GENEVA IL 60134-3325
71159	BRISTOL SOCKET SCREW CO		WATERBURY CT
71279	MIDLAND-ROSS CORP CAMBION DIV	ONE ALEWIFE PLACE	CAMBRIDGE MA 02138-2310
71400	BUSSMANN DIV OF COOPER INDUSTRIES INC	114 OLD STATE RD PO BOX 14460	ST LOUIS MO 63178
71590	MEPCO/CENTRALAB INC A NORTH AMERICAN PHILIPS CO	HWY 20 W P O BOX 858	FORT DODGE IA 50501
72228	AMCA INTERNATIONAL CORP CONTINENTAL SCREW CO DIV	459 MT PLEASANT	NEW BEDFORD MA 02742
73743	FISCHER SPECIAL MFG CO	111 INDUSTRIAL RD	COLD SPRING KY 41076-9749
74445	HOLO-KROME CO	31 BROOK ST	ELMWOOD CT 06110-2350
75915	LITTELFUSE TRACTOR INC SUB TRACTOR INC	800 E NORTHWEST HWY	DES PLAINES IL 60016-3049
77900	SHAKEPROOF DIV OF ILLINOIS TOOL WORKS	SAINT CHARLES RD	ELGIN IL 60120
78189	ILLINOIS TOOL WORKS INC SHAKEPROOF DIV	ST CHARLES ROAD	ELGIN IL 60120
79136	WALDES KOHINOR IN	47-16 AUSTEL PLACE	LONG ISLAND CITY NY 11101-4402

http://manoman.sqhill.com

CROSS INDEX - MFR. CODE NUMBER TO MANUFACTURER

Mfr. Code	Manufacturer	Address	City, State, Zip Code
80009	TEKTRONIX INC	14150 SW KARL BRAUM DR PO BOX 500 MS 53-111	BEAVERTON OR 97077
83385	MICRODOT MFG INC GREER-CENTRAL DIV	3221 W BIG BEAVER RD	TROY MI 48098
83486	ELCO INDUSTRIES INC	1101 SAMUELSON RD	ROCKFORD IL 61101
86445	PENN FIBRE AND SPECIALTY CO INC SUB OF PACIFIC TUBE CO	4343 G ST PO BOX 4890A	PHILADELPHIA PA 19124-4325
86928	SEASTROM MFG CO INC	701 SONORA AVE	GLENDALE CA 91201-2431
89663	REESE J RAMSEY INC	555 WHITE PLAINS RD	TARRYTOWN NY 10591-5109
91260	CONNOR SPRING AND MFG CO	1729 JUNCTION AVE	SAN JOSE CA 95112
93907	TEXTRON INC CAMCAR DIV	600 18TH AVE	ROCKFORD IL 61101
97464	INDUSTRIAL RETAINING RING CO	57 CORDIER ST	IRVINGTON NJ 07111-4035
S3109	FELLER ASA ADOLF AG C/O PANEL COMPONENTS CORP	355 TESCONI CIRCLE	SANTA ROSA CA 95401
TK0392	NORTHWEST FASTENER SALES INC	7923 SW CIRRUS DRIVE	BEAVERTON OR 97005-6448
TK0433	PORTLAND SCREW CO	6520 N BASIN	PORTLAND OR 97217-3920
TK0435	LEWIS SCREW CO	4300 S RACINE AVE	CHICAGO IL 60609-3320
TK0507	O HARA METAL PRODUCTS CO	542 BRANNAN ST	SAN FRANCISCO CA 94107
TK0508	NORTHWEST SPRING AND MFG CO	5858 WILLOW LANE	LAKE OSWEGO OR 97034-5343
TK0588	UNIVERSAL PRECISION PRODUCTS	1775 NW 216TH	HILLSBORO OR 97123
TK0858	STAUFFER SUPPLY CO	105 SE TAYLOR	PORTLAND OR 97214
TK1319	MORELLIS Q & D PLASTICS	1812 16-TH AVE	FOREST GROVE OR 97116
TK1373	PATELEC-CEM (ITALY)	10156 TORINO	VAICENTALLO 62/45S ITALY
TK1684	TECHNICAL IMAGES INC	2206 MOUNTAIN VIEW DR	NEWBURG OR 97132-9265
TK2038	MULTICOMP INC	3005 SW 154TH TERRACE #3	BEAVERTON OR 97006
TK2042	ZMAN & ASSOCIATES	7633 SO. 180TH	KENT, WA 98032
TK2165	TRI-QUEST CORP	3000 LEWIS AND CLARK HWY	VANCOUVER WA 98661-2999

http://manoman.sqhill.com

Fig. & Index No.	Tektronix Part No.	Serial/Assembly No. Effective	Dscont	Qty	12345 Name & Description	Mfr. Code	Mfr. Part No.
1-1	200-1411-00			1	RTNR,IMPLOSION:5.422 X 4.743 X 0.441	TK2165	ORDER BY DESCR
-2	213-0313-00			4	.THUMBSCREW:4-40 X 0.45,0.25 OD HD,SST	80009	213-0313-00
-3	337-1674-07			1	SHLD,IMPLOSION:SMOKE GRAY	80009	337-1674-07
	337-1674-08			1	SHLD,IMPLOSION:FILTER,MKD FOR NTSC (OPTION 05 ONLY)	80009	337-1674-08
	337-1674-09			1	SHLD,IMPLOSION:FILTER,MKD FOR CCIR (OPTION 05 ONLY)	80009	337-1674-09
-4	366-0494-00			2	KNOB:GRAY WITH SETSCREW	80009	366-0494-00
	213-0246-00			2	.SETSCREW:5-40 X 0.094,STL	71159	ORDER BY DESCR
-5	366-1031-02			2	KNOB:RED,VAR,0.127 ID X 0.392 OD X 0.466 H	TK2165	ORDER BY DESCR
	213-0246-00			2	.SETSCREW:5-40 X 0.094,STL	71159	ORDER BY DESCR
-6	366-1426-00			2	KNOB:GY,VOLT/DIV,0.191 X 1.125 X 0.79	80009	366-1426-00
	213-0153-00			2	.SETSCREW:5-40 X 0.125,STL	TK0392	ORDER BY DESCR
-7	366-0215-02			2	KNOB:LEVER SWITCH	80009	366-0215-02
-8	366-1023-01			3	KNOB:GY,0.127 ID X 0.392 OD X 0.531 H	80009	366-1023-01
	213-0246-00			3	.SETSCREW:5-40 X 0.094,STL	71159	ORDER BY DESCR
-9	366-1319-02			1	KNOB:GY,0.079 ID X 0.28 OD X 0.32 H	80009	366-1319-02
	213-0075-00			1	.SETSCREW:4-40 X 0.094,STL	74445	ORDER BY DESCR
-10	366-1215-03			1	KNOB:GY,0.127 ID X 0.5 OD X 0.531 H	TK2165	ORDER BY DESCR
	213-0153-00			1	.SETSCREW:5-40 X 0.125,STL	TK0392	ORDER BY DESCR
-11	366-1059-00			1	PUSH BUTTON:GRAY,0.227 OD X 0.3	80009	366-1059-00
-12	366-1215-03			1	KNOB:GY,0.127 ID X 0.5 OD X 0.531 H	TK2165	ORDER BY DESCR
	213-0153-00			1	.SETSCREW:5-40 X 0.125,STL	TK0392	ORDER BY DESCR
-13	331-0328-00			1	DIAL,CONTROL:10 TURN,0.0 TO 9.99	05129	461-S-70
	213-0048-00			1	.SETSCREW:4-40 X 0.125,STL	TK0392	ORDER BY DESCR
-14	366-1346-02			1	KNOB:RED,VAR,0.08 ID X 0.392 OD X 0.466 H	80009	366-1346-02
	213-0153-00			1	.SETSCREW:5-40 X 0.125,STL	TK0392	ORDER BY DESCR
-15	366-1219-01			1	KNOB:GY,DLYD SWP,0.203 X 0.97 X 0.89	TK2165	ORDER BY DESCR
	213-0890-00			2	.SETSCREW:6-32 X 0.25 L,STL	56878	ORDER BY DESCR
-16	354-0442-01			1	RING,KNOB SKIRT:CLEAR,1.45 OD	TK2165	ORDER BY DESCR
	213-0005-00			2	.SETSCREW:8-32 X 0.125,STL	TK0392	ORDER BY DESCR
-17	401-0080-00			1	BRG,KNOB SKIRT:0.789 ID X 0.866"OD PLASTIC	80009	401-0080-00
-18	366-1327-00			1	KNOB:GY,0.8 ID X 0.392 OD X 0.466 H	80009	366-1327-00
	213-0153-00			1	.SETSCREW:5-40 X 0.125,STL	TK0392	ORDER BY DESCR
-19	366-1280-00			1	KNOB:GY,0.127 ID X 0.588 OD X 0.6 H	TK2165	ORDER BY DESCR
	213-0153-00			1	.SETSCREW:5-40 X 0.125,STL	TK0392	ORDER BY DESCR
-20	366-0494-00			1	KNOB:GRAY WITH SETSCREW	80009	366-0494-00
	213-0246-00			1	.SETSCREW:5-40 X 0.094,STL	71159	ORDER BY DESCR
-21	366-1278-00			2	KNOB:GY,0.08 ID X 0.392 OD X 0.466 H	TK2165	ORDER BY DESCR
	213-0153-00			2	.SETSCREW:5-40 X 0.125,STL	TK0392	ORDER BY DESCR
-22	366-1280-00			2	KNOB:GY,0.127 ID X 0.588 OD X 0.6 H	TK2165	ORDER BY DESCR
	213-0153-00			2	.SETSCREW:5-40 X 0.125,STL	TK0392	ORDER BY DESCR
-23	426-0681-00			16	FRAME,PUSH BTN:	80009	426-0681-00
-24	426-1072-00			4	FRAME,PUSH BTN:SILVER GRAY PLSTC	80009	426-1072-00
-25	358-0378-01			2	BUSHING,SLEEVE:0.131 ID X 0.18 OD X 0.125 L	80009	358-0378-01
-26	358-0599-00			5	BUSHING,SLEEVE:0.125 ID X 0.25 OD X 0.234	28520	B-187-125
-27	358-0540-00			2	BSHG,MACH THD:0.25-32 X 0.128 X 0.24,AL ATTACHING PARTS	80009	358-0540-00
-28	210-0583-00			2	NUT,PLAIN,HEX:0.25-32 X 0.312,BRS CD PL	73743	2X-20319-402
-29	210-0940-00			2	WASHER,FLAT:0.25 ID X 0.375 OD X 0.02,STL END ATTACHING PARTS	12327	ORDER BY DESCR
-30	358-0539-00			1	BSHG,MACH THD:0.25-32 X 0.144 X 0.315,AL ATTACHING PARTS	80009	358-0539-00
-31	210-0583-00			1	NUT,PLAIN,HEX:0.25-32 X 0.312,BRS CD PL	73743	2X-20319-402
-32	210-0940-00			2	WASHER,FLAT:0.25 ID X 0.375 OD X 0.02,STL END ATTACHING PARTS	12327	ORDER BY DESCR
-33	358-0539-00			1	BSHG,MACH THD:0.25-32 X 0.144 X 0.315,AL ATTACHING PARTS	80009	358-0539-00
-34	129-0213-00			1	SPACER,POST:1.156 L,0.25-32 EA END,AL	80009	129-0213-00
-35	210-0940-00			1	WASHER,FLAT:0.25 ID X 0.375 OD X 0.02,STL END ATTACHING PARTS	12327	ORDER BY DESCR
-36	358-0216-01			2	GROMMET,PLASTIC:WHITE,ROUND,0.252 ID	TK2165	ORDER BY DESCR
-37	358-0216-00			1	GROMMET,PLASTIC:GRAY,ROUND,0.257 ID	80009	358-0216-00
-38	378-0635-00			4	LENS,LIGHT:WHITE	80009	378-0635-00
-39	333-2580-01			1	PANEL,FRONT:	80009	333-2580-01
	333-1810-04			1	PANEL,FRONT: (OPTION 05 ONLY)	TK1684	ORDER BY DESCR
-40	352-0477-00			6	HOLDER,LED:GRAY POLYCARBONATE	TK2165	ORDER BY DESCR

http://manoman.sqhill.com

Fig. & Index No.	Tektronix Part No.	Serial/Assembly No. Effective	Dscont	Qty	12345 Name & Description	Mfr. Code	Mfr. Part No.
1-41	----- -----			1	CKT BRD ASSY:CRT SCALE ILLUM(SEE A9 REPL)		
-42	352-0329-00			1	.LAMPHOLDER:SCALE ILLUM,WHITE DELRIN	TK2165	ORDER BY DESCR
-43	378-0728-00			1	.REFLECTOR,LIGHT:SCALE ILLUMINATION	80009	378-0728-00
-44	175-0825-00			AR	.CABLE,SP,ELEC:2,26 AWG,STRD,PVC JKT,RBN	80009	175-0825-00
-45	131-0707-00			2	.CONTACT,ELEC:22-26 AWG,BRS,CU BE GLD PL	22526	47439-000
-46	352-0169-00			1	.HLDR,TERM CONN:2 WIRE,BLACK	80009	352-0169-00
-47	348-0276-00			AR	SHLD GSKT,ELEK:MESH TYPE,0.124 OD,BULK	TK0646	01-0404-3719
-48	386-2801-02	B200000	B200681	1	SUBPANEL,FRONT:	80009	386-2801-02
	386-2801-05	B200682		1	SUBPANEL,FRONT:	80009	386-2801-05
	386-2801-02	B200000	B200818	1	SUBPANEL,FRONT: (WITH DM44)	80009	386-2801-02
	386-2801-05	B200819		1	SUBPANEL,FRONT: (WITH DM44) ATTACHING PARTS	80009	386-2801-05
-49	213-0107-00			7	SCREW,TPG,TF:4-40 X 0.25,TYPE C,FLH,100 DEG END ATTACHING PARTS	83385	ORDER BY DESCR
-50	386-2340-00			4	SUPPORT,CRT:FRONT	80009	386-2340-00
-51	342-0184-00			1	INSULATOR,FILM:CRT,MYLAR	80009	342-0184-00
-52	426-0926-02			1	FRAME SECT,CAB.:FRONT ATTACHING PARTS	80009	426-0926-02
-53	213-0183-00			4	SCREW,TPG,TF:6-20 X 0.5,TYPE B,PNH,STL END ATTACHING PARTS	83385	ORDER BY DESCR

http://manoman.sqhill.com

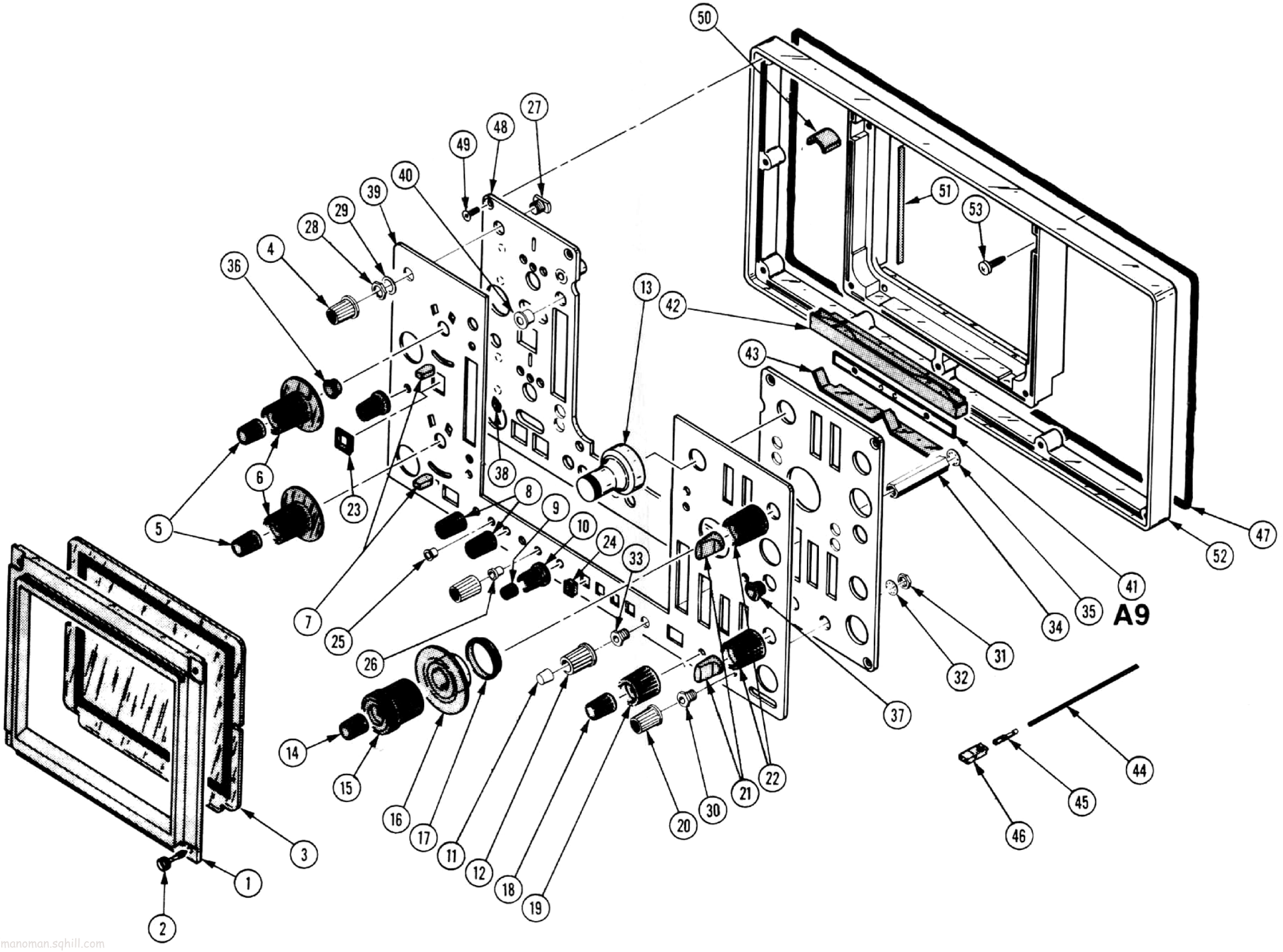

http://manoman.sqhill.com

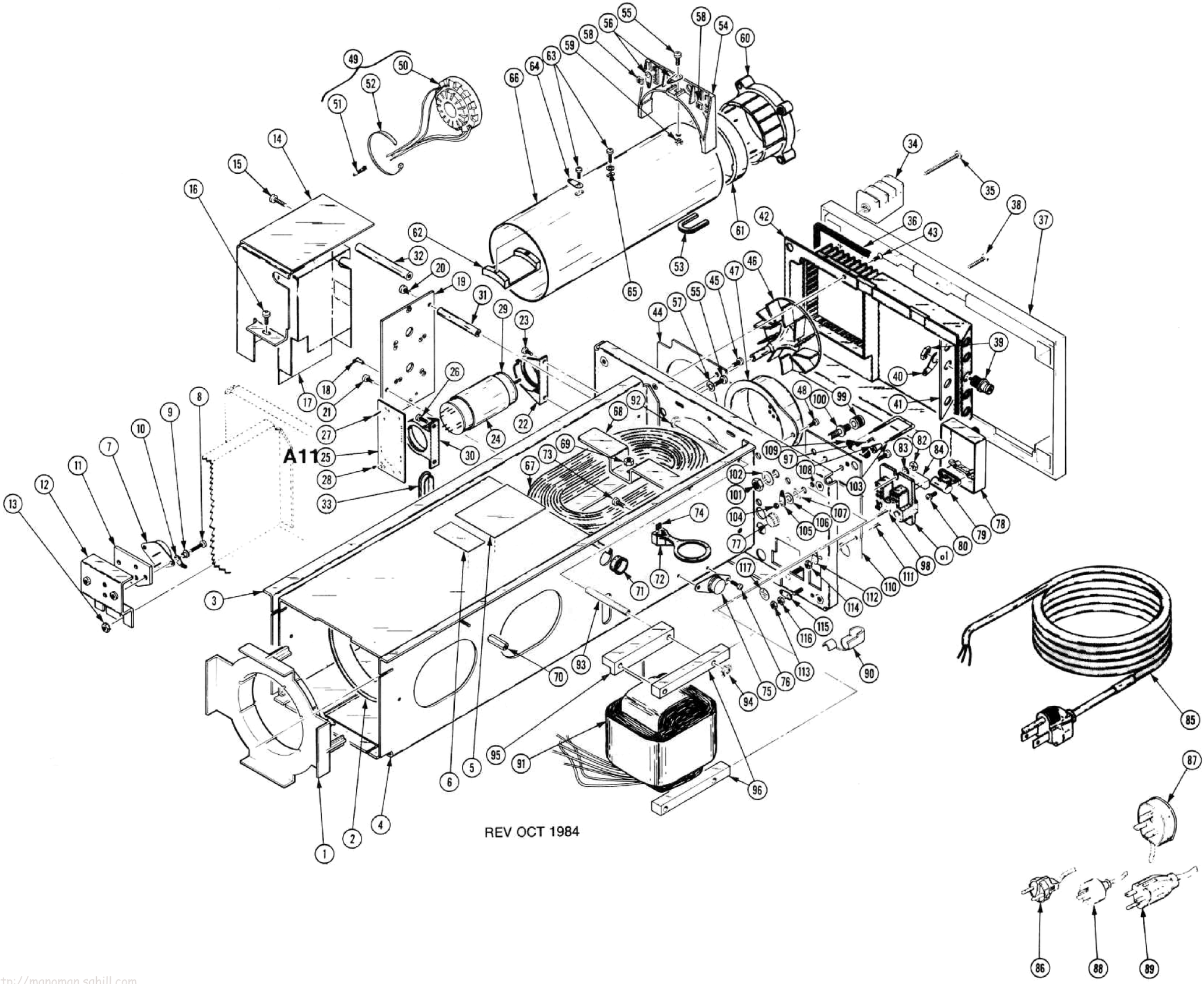

http://manoman.sqhill.com

Fig. & Index No.	Tektronix Part No.	Serial/Assembly No. Effective	Dscont	Qty	12345 Name & Description	Mfr. Code	Mfr. Part No.
2-1	386-2876-00			1	SUPPORT,CRT:CENTER	80009	386-2876-00
-2	----- -----			1	COIL,TUBE DEFL:(SEE L1551 REPL CHASS PARTS)		
-3	441-1202-01			1	CHASSIS,SCOPE:MAIN W/BRACKETS	80009	441-1202-01
-4	337-2081-00			1	.SHIELD,CRT:FRONT	80009	337-2081-00
-5	334-1951-00			1	MARKER,IDENT:MKD WARNING,CRT VOLTAGES	22670	ORDER BY DESCR
-6	334-1379-00			1	MARKER,IDENT:MKD HI VACUUM	07416	ORDER BY DESCR
-7	----- -----			1	TRANSISTOR:(SEE Q1486 REPL CHASSIS PARTS)		
					ATTACHING PARTS		
-8	211-0012-00			2	SCREW,MACHINE:4-40 X 0.375,PNH,STL	TK0435	ORDER BY DESCR
-9	361-0007-00			2	SPACER,SLEEVE:0.188 L X 0.111 ID,POLTHN	80009	361-0007-00
-10	210-0205-00			1	TERMINAL,LUG:0.172 ID,LOCKING,BRS TIN PL	86928	5442-7
					END ATTACHING PARTS		
-11	214-1610-00			1	HEAT SINK,XSTR:TO-3,ALUMINA	80009	214-1610-00
-12	407-1153-00			1	BRACKET,XSTR:ALUMINUM	80009	407-1153-00
					ATTACHING PARTS		
-13	210-0586-00			2	NUT,PL,ASSEM WA:4-40 X 0.25,STL CD PL	78189	211-041800-00
					END ATTACHING PARTS		
-14	337-2000-00			1	SHIELD,ELEC:HV MULTIPLIER	80009	337-2000-00
					ATTACHING PARTS		
-15	211-0503-00			2	SCREW,MACHINE:6-32 X 0.188,PNH,STL	TK0435	ORDER BY DESCR
-16	211-0008-00			1	SCREW,MACHINE:4-40 X 0.25,PNH,STL	93907	ORDER BY DESCR
					END ATTACHING PARTS		
-17	342-0225-00			1	INSUL,CKT BOARD:POLYCARBONATE	80009	342-0225-00
-18	343-0088-00			1	CLAMP,CABLE:0.062 DIA,PLASTIC	80009	343-0088-00
-19	----- -----			1	CKT BOARD ASSY:HV MULTIPLIER(SEE A8 REPL)		
					ATTACHING PARTS		
-20	211-0601-00			1	SCR,ASSEM WSHR:6-32 X 0.312,PNH,BRS NP,POZ	TK0435	ORDER BY DESCR
-21	211-0244-00			1	SCR,ASSEM WSHR:4-40 X 0.312,PNH STL	TK0858	211-0244-00
					END ATTACHING PARTS		
-22	426-0781-00			1	MOUNT,FAN MOTOR:	80009	426-0781-00
					ATTACHING PARTS		
-23	213-0088-00			2	SCREW,TPG,TF:4-24 X 0.25,TYPE B,PNH,STL	83385	ORDER BY DESCR
					END ATTACHING PARTS		
-24	337-1762-00			1	SHIELD,ELEC:FAN MOTOR	80009	337-1762-00
-25	----- -----			1	CKT BOARD ASSY:FAN MOTOR(SEE A11 REPL)		
					ATTACHING PARTS		
-26	213-0088-00			2	SCREW,TPG,TF:4-24 X 0.25,TYPE B,PNH,STL	83385	ORDER BY DESCR
					END ATTACHING PARTS		
					CKT BOARD ASSY INCLUDES:		
-27	131-0608-00			2	.TERMINAL,PIN:0.365 L X 0.025 BRZ GLD PL	22526	48283-036
-28	136-0252-07			3	.SOCKET,PIN CONN:W/O DIMPLE	22526	75060-012
-29	----- -----			1	.MOTOR,DC:BRUSHLESS(SEE A11B8045 REPL)		
-30	426-0781-00			1	.MOUNT,FAN MOTOR:	80009	426-0781-00
-31	385-0060-00			1	SPACER,POST:1.75 L W/6-32 THD EA END,NYL	80009	385-0060-00
-32	385-0125-00			2	SPACER,POST:2.343 L W/6-32 THD EA END,AL	80009	385-0125-00
-33	348-0253-00			1	GROMMET,PLASTIC:BLACK,OBLONG,3.0 X 0.925	80009	348-0253-00
-34	348-0339-00			4	FOOT,CABINET:W/CORD WRAP,BLACK PU	TK2165	ORDER BY DESCR
					ATTACHING PARTS		
-35	212-0020-00			4	SCREW,MACHINE:8-32 X 1.0,PNH,STL	83385	ORDER BY DESCR
					END ATTACHING PARTS		
-36	348-0349-00			AR	SHLD GSKT,ELEK:MESH,0.24 SQ,BULK	07700	21-43951
-37	426-0970-00			1	FRAME SECT,CAB.:REAR	80009	426-0970-00
					ATTACHING PARTS		
-38	211-0516-00			2	SCREW,MACHINE:6-32 X 0.875,PNH,STL	TK0435	ORDER BY DESCR
					END ATTACHING PARTS		
-39	----- -----			4	CONN,RCPT,:(SEE J145,J159,J859,J918 REPL		
					CHASSIS PARTS)		
-40	210-0255-00			4	TERMINAL,LUG:0.391 ID,LOCKING,BRS CD PL	12327	ORDER BY DESCR
-41	386-2408-00			1	PLATE,CONN MTG:ALUMINUM	80009	386-2408-00
-42	200-1634-00			1	COVER,SCOPE:REAR	TK2165	ORDER BY DESCR
					ATTACHING PARTS		
-43	211-0101-00			2	SCREW,MACHINE:4-40 X 0.25,FLH,100 DEG,STL	TK0435	ORDER BY DESCR
					END ATTACHING PARTS		
-44	200-1635-00			1	COVER,FAN IMPLR:	80009	200-1635-00
					ATTACHING PARTS		
-45	211-0534-00			2	SCR,ASSEM WSHR:6-32 X 0.312,PNH,STL,CD PL	01536	ORDER BY DESCR
					END ATTACHING PARTS		
-46	369-0038-02	B020000	B200398	1	IMPLR,FAN,CENTR:	80009	369-0038-02

http://manoman.sqhill.com

Fig. & Index No.	Tektronix Part No.	Serial/Assembly No. Effective	Dscont	Qty	12345 Name & Description	Mfr. Code	Mfr. Part No.
2-	369-0038-03	B200399		1	IMPLR,FAN,CTR:	80009	369-0038-03
	213-0075-00			1	.SETSCREW:4-40 X 0.094,STL	74445	ORDER BY DESCR
-47	200-1459-00			1	COVER,CRT:REAR	80009	200-1459-00
					ATTACHING PARTS		
-48	211-0008-00			2	SCREW,MACHINE:4-40 X 0.25,PNH,STL	93907	ORDER BY DESCR
					END ATTACHING PARTS		
-49	136-0581-00			1	SKT,PL-IN ELEK:ELCTRN TUBE,14 CONT W/LEADS	80009	136-0581-00
-50	136-0202-05			1	.SKT,PL-IN ELEK:ELECTRON TUBE,14 CONTACT	80009	136-0202-05
-51	214-0464-00			14	.CONTACT,ELEC:CRT SOCKET,CD PL	80009	214-0464-00
-52	343-0549-00			3	STRAP,TIEDOWN,E:0.091 W X 4.0 L,ZYTEL	06383	PLT1M
-53	348-0145-00			1	GROMMET,PLASTIC:GRAY,U SHAPE,0.48 ID	80009	348-0145-00
-54	407-1128-00			1	BRKT,CRT SHIELD:REAR,NYLON	80009	407-1128-00
					ATTACHING PARTS		
-55	211-0507-00			3	SCREW,MACHINE:6-32 X 0.312,PNH,STL	83385	ORDER BY DESCR
-56	210-0202-00			3	TERMINAL,LUG:0.146 ID,LOCKING,BRZ TIN PL	86928	A-373-158-2
-57	210-0803-00			1	WASHER,FLAT:0.15 ID X 0.375 OD X 0.032,STL	12327	ORDER BY DESCR
-58	220-0419-00			2	NUT,PLAIN,SQ:6-32 X 0.312 SQ,STL CD PL	83385	ORDER BY DESCR
-59	210-0457-00			1	NUT,PL,ASSEM WA:6-32 X 0.312,STL CD PL	78189	511-061800-00
					END ATTACHING PARTS		
-60	386-2246-00			1	SUPPORT,CRT:REAR	80009	386-2246-00
-61	----- -----			1	COIL,RF:Y AXIS(SEE L1561 REPL CHASSIS PART)		
					ATTACHING PARTS		
-62	343-0217-00			1	CLAMP,COIL:POLYPROPYLENE	80009	343-0217-00
-63	211-0147-00			2	SCREW,MACHINE:4-40 X 0.250,PNH,SST	TK0435	ORDER BY DESCR
-64	210-0201-00			1	TERMINAL,LUG:0.12 ID,LOCKING,BRZ TIN PL	86928	A373-157-2
-65	210-1092-00			1	WASHER,FLAT:0.147 ID X 0.312 OD X 0.028	86928	5714-33-32N
					END ATTACHING PARTS		
-66	337-1971-00			1	SHIELD,CRT:REAR	80009	337-1971-00
-67	----- -----			1	DELAY LINE,:(SEE DL339 REPL CHASSIS PARTS)		
					ATTACHING PARTS		
-68	407-1138-00			1	BRKT,DELAY LINE:ALUMINUM	80009	407-1138-00
-69	210-0457-00			1	NUT,PL,ASSEM WA:6-32 X 0.312,STL CD PL	78189	511-061800-00
					END ATTACHING PARTS		
-70	129-0419-00	B020000	B200646	1	SPACER,POST:0.588 L,4-40,AL,0.25 HEX	80009	129-0419-00
	129-0123-00	B200647		1	SPACER,POST:0.688 L,4-40 THRU,AL,0.25 HEX	80009	129-0123-00
-71	348-0064-00			4	GROMMET,PLASTIC:GRAY,ROUND,0.582 ID	80009	348-0064-00
-72	386-2889-00			1	SUPPORT,CAP.:	TK1319	N/A
					ATTACHING PARTS		
-73	211-0507-00			1	SCREW,MACHINE:6-32 X 0.312,PNH,STL	83385	ORDER BY DESCR
-74	220-0444-00			1	NUT,PLAIN,SQ:6-32 X 0.25 SQ,SST	70318	ORDER BY DESCR
					END ATTACHING PARTS		
-75	----- -----			1	SW,THERMO:(SEE S1702 REPL CHASSIS PARTS)		
					ATTACHING PARTS		
-76	213-0138-00			2	SCREW,TPG,TF:4-24 X 0.188,TYPE B,PNH,STL	TK0435	ORDER BY DESCR
					END ATTACHING PARTS		
-77	348-0067-00			1	GROMMET,PLASTIC:GRAY,ROUND,0.252 ID	80009	348-0067-00
-78	200-1445-01			1	COV,LINE V SEL:W/HARDWARE	80009	200-1445-01
-79	352-0102-00			1	.FUSEHOLDER:(1)3AG	80009	352-0102-00
					ATTACHING PARTS		
-80	213-0717-00			2	.SCREW,TPG,TF:4-20 X 0.312,PNH,STL	72228	0004604M24
					END ATTACHING PARTS		
-81	204-0549-03			1	BODY ASSY,LINE:	80009	204-0549-03
					ATTACHING PARTS		
-82	210-0407-00			2	NUT,PLAIN,HEX:6-32 X 0.25,BRS CD PL	73743	3038-402
-83	210-0006-00			2	WASHER,LOCK:#6 INTL,0.018 THK,STL	77900	1206-00-00-0541C
					END ATTACHING PARTS		
					BODY ASSY,LINE INCLUDES:		
-84	214-0778-01			1	.CONT ASSY,ELEC:LINE V SEL,LOW/MED/HI	80009	214-0778-01
-85	161-0033-07			1	CABLE ASSY,PWR,:3,18 AWG,125V,92.0 L	16428	KH8389
-86	161-0033-27			1	CABLE ASSY,PWR,:3,0.75MM SQ,220V,98.0 L	TK1373	A25BF-X
					(OPTION A1)		
-87	161-0033-28			1	CABLE ASSY,PWR,:3,0.75MM SQ,240V,98.0 L	TK1373	A25UK-X
					(OPTION A2)		
-88	161-0033-29			1	CABLE ASSY,PWR,:3,0,75MM SQ,240V,98.0 L	S3109	ORDER BY DESCR
					(OPTION A3)		
-89	161-0033-38			1	CABLE ASSY,PWR,:3,18 AWG,240V,91.0 L	70903	ORDER BY DESCR
					(OPTION A4)		
					ATTACHING PARTS		

http://manoman.sqhill.com

Fig. & Index No.	Tektronix Part No.	Serial/Assembly No. Effective	Dscont	Qty	12345 Name & Description	Mfr. Code	Mfr. Part No.
2-90	358-0323-00			1	BSHG,STRAIN RLF:U/W 0.29 DIA CABLE,R ANGLE SAFETY CONTROLLED	28520	SR-15-1
					END ATTACHING PARTS		
-91	----- -----			1	XFMR:POWER(SEE T1701 REPL CHASSIS PARTS)		
					ATTACHING PARTS		
-92	212-0511-00			4	SCREW,MACHINE:10-32 X 3.0 HEX HD,STL	83385	ORDER BY DESCR
-93	166-0228-00			4	INSUL SLVG,ELEC:0.187 ID X 2.75 L,MYLAR	80009	166-0228-00
-94	220-0410-00			2	NUT,PL,ASSEM WA:10-32 X 0.375 HEX,STL CD PL	78189	511-101800-50
-95	361-0609-01			2	SPACER,XFMR:0.479 X 0.6 X 2.8,AL	80009	361-0609-01
					END ATTACHING PARTS		
-96	343-0475-00			2	RETAINER,XFMR:ALUMINUM	80009	343-0475-00
					ATTACHING PARTS		
-97	211-0559-00			1	SCREW,MACHINE:6-32 X 0.375,FLH,100 DEG	TK0435	1593-300
-98	211-0507-00			1	SCREW,MACHINE:6-32 X 0.312,PNH,STL	83385	ORDER BY DESCR
					END ATTACHING PARTS		
-99	200-0103-00			1	NUT,PLAIN,KNURL:0.25-28 X 0.375"OD BRASS	80009	200-0103-00
-100	355-0507-00			1	STUD,SHOULDERED:BINDING POST,BRS NP	80009	355-0507-00
					ATTACHING PARTS		
-101	210-0455-00			1	NUT,PLAIN,HEX:0.25-28 X 0.375,BRS NP	73743	3089-402
-102	210-0011-00			1	WASHER,LOCK:0.25 ID,INTL,0.025 THK,STL	09772	1214-00-00-0541C
					END ATTACHING PARTS		
-103	119-0373-00			1	COIL,CAL:	80009	119-0373-00
					ATTACHING PARTS		
-104	210-0442-00			2	NUT,PLAIN,HEX:3-48 X 0.188,BRS CD PL	73743	3014-402
-105	210-0201-00			2	TERMINAL,LUG:0.12 ID,LOCKING,BRZ TIN PL	86928	A373-157-2
-106	210-0851-00			2	WASHER,FLAT:0.119 ID X 0.375 OD X 0.025,STL	12327	ORDER BY DESCR
-107	210-0811-00			2	WASHER,SHLDR:0.14 X 0.313 X 0.062,FBR	86928	5604-47
-108	210-0593-00			2	NUT,FINISHING:3-48 X 0.25 HEX,BRS NP	80009	210-0593-00
					END ATTACHING PARTS		
-109	361-0059-01			1	INSULATOR,PLATE:1.093 X 0.343 X 0.125,DLRN	80009	361-0059-01
-110	386-2748-01			1	PANEL,REAR:SAFETY CONTROLLED	80009	386-2748-01
					ATTACHING PARTS		
-111	211-0114-00			1	SCREW,MACHINE:4-40 X 0.438,FLH,100 DEG,STL	83385	ORDER BY DESCR
-112	210-0201-00			1	TERMINAL,LUG:0.12 ID,LOCKING,BRZ TIN PL	86928	A373-157-2
-113	210-0551-00			1	NUT,PLAIN,HEX:4-40 X 0.25,ST CD PL	TK0435	ORDER BY DESCR
-114	210-0586-00			1	NUT,PL,ASSEM WA:4-40 X 0.25,STL CD PL	78189	211-041800-00
					END ATTACHING PARTS		
-115	210-0202-00			1	TERMINAL,LUG:0.146 ID,LOCKING,BRZ TIN PL	86928	A-373-158-2
					ATTACHING PARTS		
-116	210-0586-00			1	NUT,PL,ASSEM WA:4-40 X 0.25,STL CD PL	78189	211-041800-00
					END ATTACHING PARTS		
-117	334-3379-00			1	MARKER,IDENT:MARKED GROUND SYMBOL	07416	ORDER BY DESCR
	198-2218-01			1	WIRE SET,ELEC:	80009	198-2218-01
					.CA ASSY,SP,ELEC:4,26 AWG,4.0 L,RIBBON		
					.CA ASSY,SP,ELEC:4,26 AWG,8.0 L,RIBBON		
					.CA ASSY,SP,ELEC:4,26 AWG,9.0 L,RIBBON		
					.CA ASSY,SP,ELEC:2,22 AWG,6.0 L,RIBBON		
					.CA ASSY,RF:50 OHM COAX,11.0L		
					.CA ASSY,RF:50 OHM COAX,11.0L		
					.CA ASSY,SP,ELEC:26AWG,9.5 L RIBBON		
					.CA ASSY,SP,ELEC:26AWG,7.0 L RIBBON		
					.CA ASSY,SP,ELEC:26AWG,8.0 L RIBBON		
					.CA ASSY,SP,ELEC:3,26 AWG,4.5 L RIBBON		
					.CA ASSY,SP,ELEC:3,26 AWG 4.0 L RIBBON		
					.CA ASSY,SP,ELEC:5,26 AWG,13.0 L RIBBON		
					.BRAID,WIRE:0.156 W,FLAT		

http://manoman.sqhill.com

Fig. & Index No.	Tektronix Part No.	Serial/Assembly No. Effective	Dscont	Qty	12345 Name & Description	Mfr. Code	Mfr. Part No.
3-1	384-1007-01			2	EXTENSION SHAFT:8.428 L X 0.124 OD,PLSTC	80009	384-1007-01
-2	376-0051-00			4	CPLG,SHAFT,FLEX:0.127 ID X 0.375 OD,DELRIN	80009	376-0051-00
	213-0022-00			16	.SETSCREW:4-40 X 0.188,STL	74445	ORDER BY DESCR
-3	384-1149-00			2	EXTENSION SHAFT:7.0 L X 0.124 OD,EPOXY GL	80009	384-1149-00
-4	366-1402-31			1	PUSH BUTTON:SIL GY,INVERT	80009	366-1402-31
-5	384-1560-00			1	EXTENSION SHAFT:4.834 L,GL FILLED NYLON	80009	384-1560-00
-6	384-1542-00			1	EXTENSION SHAFT:11.682 L X 0.187 SQ,PLASTIC	80009	384-1542-00
-7	366-1557-85			1	PUSH BUTTON:366-1257-00 MKD BW LIMIT	80009	366-1557-85
-8	343-0213-00			1	CLAMP,CABLE:0.2 ID,PLASTIC	80009	343-0213-00
-9	131-1428-00			1	CONTACT,ELEC:GROUNDING,CU BE CD PL	80009	131-1428-00
					ATTACHING PARTS		
-10	211-0661-00			1	SCR,ASSEM WSHR:4-40 X 0.25,PNH,STL,POZ	01536	821-01655-024
					END ATTACHING PARTS		
-11	----- -----			1	CKT BOARD ASSY:VERT PRE AMPL(SEE A2 REPL)		
					ATTACHING PARTS		
-12	211-0244-00			6	SCR,ASSEM WSHR:4-40 X 0.312,PNH STL	TK0858	211-0244-00
-13	129-0413-01			1	SPACER,POST:0.538 L,4-40 TAP/STUD,STL	80009	129-0413-01
-14	210-0994-00			1	WASHER,FLAT:0.125 ID X 0.25 OD X 0.022,STL	86928	A371-283-20
					END ATTACHING PARTS		
					CKT BOARD ASSY INCLUDES:		
-15	----- -----			2	.RESISTOR:(SEE A2R3055,R3558 REPL)		
-16	----- -----			2	.RESISTOR:(SEE A2R3285,R3782 REPL)		
-17	----- -----			1	.SWITCH:(SEE A2S3414 REPL)		
-18	361-0411-00			2	.SPACER,PUSH SW:0.109 L,BLUE POLYCARBONATE	80009	361-0411-00
-19	361-0515-00			2	.SPACER,SWITCH:0.176 L,ACETAL	80009	361-0515-00
-20	----- -----			1	.SWITCH:(SEE A2S3995 REPL)		
-21	361-0411-00			2	.SPACER,PUSH SW:0.109 L,BLUE POLYCARBONATE	80009	361-0411-00
-22	131-0566-00			2	.BUS,CONDUCTOR:DUMMY RES,0.094 OD X 0.225 L	24546	OMA 07
-23	214-0579-00			5	.TERM,TEST POINT:BRS CD PL	80009	214-0579-00
-24	131-1003-00			9	.CONN,RCPT,ELEC:CKT BD MT,3 PRONG	80009	131-1003-00
-25	136-0252-07			77	.SOCKET,PIN CONN:W/O DIMPLE	22526	75060-012
-26	129-0385-00			2	SPACER,POST:1.77 L,6-32 & 4-40 ENDS,BRS,CU	80009	129-0385-00
					SN ZN PL,0.25 HEX		
-27	366-1257-19			1	PUSH BUTTON:SIL,GY,CH 1	80009	366-1257-19
-28	366-1557-84			1	PUSH BUTTON:366-1257-00 MKD TRIG VIEW	80009	366-1557-84
-29	366-1257-16			1	PUSH BUTTON:SIL GY,ADD	80009	366-1257-16
-30	366-1402-37			1	PUSH BUTTON:SIL GY,CHOP	80009	366-1402-37
-31	366-1257-20			1	PUSH BUTTON:SIL GY,CH 2	80009	366-1257-20
-32	384-1129-00			5	EXTENSION SHAFT:5.607 INCH LONG	80009	384-1129-00
-33	----- -----			1	CKT BOARD ASSY:PROBE CODING(SEE A14 REPL)		
					ATTACHING PARTS		
-34	211-0008-00			2	SCREW,MACHINE:4-40 X 0.25,PNH,STL	93907	ORDER BY DESCR
					END ATTACHING PARTS		
-35	131-1428-00			2	CONTACT,ELEC:GROUNDING,CU BE CD PL	80009	131-1428-00
					ATTACHING PARTS		
-36	211-0012-00			2	SCREW,MACHINE:4-40 X 0.375,PNH,STL	TK0435	ORDER BY DESCR
-37	210-0851-00			2	WASHER,FLAT:0.119 ID X 0.375 OD X 0.025,STL	12327	ORDER BY DESCR
-38	166-0030-00			2	SPACER,SLEEVE:0.188 L X 0.18 ID,AL	80009	166-0030-00
					END ATTACHING PARTS		
-39	200-1760-00			2	COVER,ATTEN:	80009	200-1760-00
					ATTACHING PARTS		
-40	211-0008-00			2	SCREW,MACHINE:4-40 X 0.25,PNH,STL	93907	ORDER BY DESCR
-41	210-0851-00			2	WASHER,FLAT:0.119 ID X 0.375 OD X 0.025,STL	12327	ORDER BY DESCR
					END ATTACHING PARTS		
-42	200-1439-00			2	COVER,CHASSIS:ATTENUATOR	80009	200-1439-00
					ATTACHING PARTS		
-43	213-0055-00			2	SCREW,TPG,TF:2-32 X 0.188,TYPE B,PNH,STL	93907	ORDER BY DESCR
-44	210-0938-00			2	WASHER,FLAT:0.109 ID X 0.25 OD X 0.032,STL	86928	ORDER BY DESCR
-45	211-0008-00			4	SCREW,MACHINE:4-40 X 0.25,PNH,STL	93907	ORDER BY DESCR
-46	210-0851-00			4	WASHER,FLAT:0.119 ID X 0.375 OD X 0.025,STL	12327	ORDER BY DESCR
					END ATTACHING PARTS		
-47	----- -----			1	ATTENUATOR ASSEMBLY:(SEE A1 ASSY REPL)		
					ATTACHING PARTS		
-48	129-0457-00			1	SPACER,POST:1.07 L,4-40 TAP/STUD,BRS	80009	129-0457-00
-49	211-0244-00			1	SCR,ASSEM WSHR:4-40 X 0.312,PNH STL	TK0858	211-0244-00
-50	210-0586-00			4	NUT,PL,ASSEM WA:4-40 X 0.25,STL CD PL	78189	211-041800-00
					END ATTACHING PARTS		
					ATTENUATOR ASSY INCLUDES:		

http://manoman.sqhill.com

Fig. & Index No.	Tektronix Part No.	Serial/Assembly No. Effective	Dscont	Qty	12345 Name & Description	Mfr. Code	Mfr. Part No.
3-51	131-0679-02			2	.CONN,RCPT,ELEC:BNC,MALE,3 CONTACT	24931	28JR270-1
					ATTACHING PARTS		
-52	220-0695-00			2	.NUT,PLAIN,DODEC:0.5-28 X 0.562,BRS NP	80009	220-0695-00
-53	210-1039-00			2	.WASHER,LOCK:0.521 ID,INT,0.025 THK,SST	24931	ORDER BY DESCR
-54	210-0845-00			2	.WASHER,FLAT:0.5 ID X 0.625 OD X 0.02,STL	89663	634-R
					END ATTACHING PARTS		
-55	----- -----			2	.CKT BOARD ASSY:ATTENUATOR(SEE A1 REPL)		
					ATTACHING PARTS		
-56	211-0292-00			12	.SCR,ASSEM WSHR:4-40 X 0.29,PNH,BRS NI PL	78189	51-040445-01
					END ATTACHING PARTS		
					.ATTENUATOR BOARD INCLUDES		
-57	211-0001-00			4	..SCREW,MACHINE:2-56 X 0.25,PNH,STL	TK0435	ORDER BY DESCR
-58	210-0053-00			4	..WASHER,LOCK:#2 SPLIT,0.02 THK STL	78189	ORDER BY DESCR
-59	210-1008-00			4	..WASHER,FLAT:0.09 ID X 0.188 OD X 0.02,BRS	12327	ORDER BY DESCR
-60	210-0405-00			4	..NUT,PLAIN,HEX:2-56 X 0.188,BRS CD PL	73743	12157-50
-61	441-1058-00			2	..CHASSIS,SCOPE:ATTENUATOR	80009	441-1058-00
-62	136-0252-01			44	..SOCKET,PIN TERM:U/W 0.0.19 DIA PINS	00779	1-332095-2
	136-0333-00			4	..SOCKET,PIN TERM:U/W 0.03 DIA PINS	00779	1-331677-4
-63	337-1406-00			2	..SHIELD,ELEC:CAM CONT	80009	337-1406-00
-64	105-0243-00			2	..ACTUATOR,SWITCH:AC,DC	80009	105-0243-00
					ATTACHING PARTS		
-65	213-0214-00			2	..SCREW,CAP:2-56 X 0.375,SKT HD,STL CD PL	70278	ORDER BY DESC
					END ATTACHING PARTS		
-66	129-0299-00			8	..SPACER,POST:0.333 L,0.188 HEX,BRS	80009	129-0299-00
-67	210-0004-00			8	..WASHER,LOCK:#4 INTL,0.015 THK,STL	77900	1204-00-00-0541C
-68	211-0097-00			4	..SCREW,MACHINE:4-40 X 0.312,PNH,STL	TK0435	ORDER BY DESCR
-69	210-0004-00			4	..WASHER,LOCK:#4 INTL,0.015 THK,STL	77900	1204-00-00-0541C
-70	----- -----			2	..SW CAM ACTR AS:VOLTS/DIV(SEE A1S30 REPL)		
-71	131-0963-00			4	...CONTACT,ELEC:GROUNDING,PH BRZ,W/BRACKET	TK0507	ORDER BY DESCR
-72	210-0406-00			4	...NUT,PLAIN,HEX:4-40 X 0.188,BRS CD PL	73743	12161-50
-73	214-1139-03			4	...SPRING,FLAT:0.885 X 0.156 CU BE RED CLR	80009	214-1139-03
-74	214-1752-00			4	...ROLLER,DETENT:0.125 OD X 0.16,SST	80009	214-1752-00
-75	401-0180-00			2	...BEARING,CAM SW:FR & REAR,0.80 & 0.83 DIA	80009	401-0180-00
					ATTACHING PARTS		
-76	354-0390-00			2	...RING,RETAINING:BASIC EXT,U/O 0.375 DIA SFT	79136	5100-37-ZD
					END ATTACHING PARTS		
-77	384-0878-02			2	...SHAFT,CAM SW:0.904 L X 0.248 OD W/DRIVER	80009	384-0878-02
-78	105-0282-01			2	...ACTUATOR,CAM SW:DC,GND,AC	80009	105-0282-01
-79	210-0406-00			8	...NUT,PLAIN,HEX:4-40 X 0.188,BRS CD PL	73743	12161-50
-80	401-0178-00			2	...BEARING,CAM SW:CENTER/REAR	80009	401-0178-00
					ATTACHING PARTS		
-81	354-0443-00			2	...RING,RTNG:EXT CRESCENT,U/O 0.375 DIA SHAFT	79136	5103-37-MD
					END ATTACHING PARTS		
-82	210-1189-00			2	...WASHER,FLAT:0.195 ID X 0.367 OD X 0.008,BRS	80009	210-1189-00
-83	214-2043-00			2	...SPRING,HLCPS:0.23 OD X 0.2 L,CLE,MUW	TK0508	ORDER BY DESCR
-84	105-0521-00			2	...ACTUATOR,CAM SW:ATTEN	80009	105-0521-00
-85	384-0880-00			2	...SHAFT,CAM SW:2.438 L X 0.188 OD INTMD	80009	384-0880-00
					...CONCENTRIC W/DRIVER		
-86	210-0406-00			8	...NUT,PLAIN,HEX:4-40 X 0.188,BRS CD PL	73743	12161-50
-87	214-1139-02			2	...SPRING,FLAT:0.885 X 0.156 CU BE GRN CLR	80009	214-1139-02
	214-1139-03			2	...SPRING,FLAT:0.885 X 0.156 CU BE RED CLR	80009	214-1139-03
-88	214-1752-00			4	...ROLLER,DETENT:0.125 OD X 0.16,SST	80009	214-1752-00
-89	401-0180-00			2	...BEARING,CAM SW:FR & REAR,0.80 & 0.83 DIA	80009	401-0180-00
-90	----- -----			1	.CKT BOARD ASSY:VERT MODE SW(SEE A3 REPL)		
-91	131-0589-00			8	..TERMINAL,PIN:0.46 L X 0.025 SQ PH BRZ	22526	48283-029
-92	131-0608-00			21	..TERMINAL,PIN:0.365 L X 0.025 BRZ GLD PL	22526	48283-036
-93	136-0728-00			1	..SKT,PL-IN ELEK:MICROCKT,14 CONTACT	09922	DILB14P-108
-94	136-0252-07			18	..SOCKET,PIN CONN:W/O DIMPLE	22526	75060-012
-95	----- -----			1	..SWITCH,PUSH:VERT MODE(SEE S350 REPL)		
-96	361-0411-00			4	..SPACER,PUSH SW:0.109 L,BLUE POLYCARBONATE	80009	361-0411-00
-97	337-0896-00			2	..PLATE,ELEC SHLD:B SWEEP CKT BD	80009	337-0896-00
-98	366-1402-33			1	PUSH BUTTON:SIL GY,X10 MAG(IN)	80009	366-1402-33
-99	384-1236-01			1	EXTENSION SHAFT:9.055 L,PLSTC,GRAY,1.5 OFS	80009	384-1236-01
-100	366-1512-00			4	PUSH BUTTON:SIL GY,0.18 SQ X 0.83	80009	366-1512-00
-101	366-1402-42			1	PUSH BUTTON:SIL GY,BEAM FINDER	80009	366-1402-42
-102	384-1060-00			1	EXTENSION SHAFT:7.831 L	80009	384-1060-00
-103	386-2834-00			1	SUPPORT,SHAFT:PLASTIC	TK1319	N/A
-104	384-1179-00			1	EXTENSION SHAFT:9.4 L X 0.123 OD,EPOXY GL	80009	384-1179-00

http://manoman.sqhill.com

Fig. & Index No.	Tektronix Part No.	Serial/Assembly No. Effective	Dscont	Qty	12345 Name & Description	Mfr. Code	Mfr. Part No.
3-105	384-0376-00			2	EXTENSION SHAFT:6.238 L X 0.125 OD,AL	80009	384-0376-00
-106	384-1233-00			1	EXTENSION SHAFT:12.15 L X 0.123 OD,EPOXY GL	80009	384-1233-00
-107	376-0029-00			4	CPLG,SHAFT,RGD:0.128 ID X 0.312 OD,AL	80009	376-0029-00
	213-0075-00			8	.SETSCREW:4-40 X 0.094,STL	74445	ORDER BY DESCR
-108	384-1007-00			1	EXTENSION SHAFT:8.328 L X 0.123 OD,EPOXY GL	80009	384-1007-00
-109	376-0051-00			2	CPLG,SHAFT,FLEX:0.127 ID X 0.375 OD,DELRIN	80009	376-0051-00
	213-0022-00			8	.SETSCREW:4-40 X 0.188,STL	74445	ORDER BY DESCR
-110	----- -----			1	CKT BOARD ASSY:STORAGE & LOG(SEE A10 REPL)		
					ATTACHING PARTS		
-111	211-0244-00			4	SCR,ASSEM WSHR:4-40 X 0.312,PNH STL	TK0858	211-0244-00
					END ATTACHING PARTS		
					CKT BOARD ASSY INCLUDES:		
-112	131-0566-00			4	.BUS,CONDUCTOR:DUMMY RES,0.094 OD X 0.225 L	24546	OMA 07
-113	131-0608-00			6	.TERMINAL,PIN:0.365 L X 0.025 BRZ GLD PL	22526	48283-036
-114	131-0787-00			15	.TERMINAL,PIN:0.64 L X 0.025 SQ PH BRZ	22526	47359-000
-115	136-0252-07			27	.SOCKET,PIN CONN:W/O DIMPLE	22526	75060-012
-116	214-0579-00			3	.TERM,TEST POINT:BRS CD PL	80009	214-0579-00
-117	----- -----			1	.SWITCH,PUSH:STRG(SEE A10S1921A,B REPL)		
-118	361-0608-00			4	.SPACER,PUSH SW:0.17 L,BRN POLYCARBONATE	80009	361-0608-00
-119	407-1481-00			1	BRACKET,ANGLE:CKT BOARD,ALUMINUM	80009	407-1481-00
					ATTACHING PARTS		
-120	210-0586-00			1	NUT,PL,ASSEM WA:4-40 X 0.25,STL CD PL	78189	211-041800-00
-121	210-0810-00			1	WASHER,FLAT:0.125 ID X 0.5 OD X 0.031,FBR	86445	ORDER BY DESCR
-122	355-0175-00			1	STUD,PRESSMOUNT:4-40 X 0.35,BRS CU-SN-ZN PL	80009	355-0175-00
					END ATTACHING PARTS		
-123	337-1999-00			1	SHIELD,ELEC:HIGH VOLTAGE	80009	337-1999-00
					ATTACHING PARTS		
-124	211-0008-00			3	SCREW,MACHINE:4-40 X 0.25,PNH,STL	93907	ORDER BY DESCR
					END ATTACHING PARTS		
-125	131-1428-00			1	CONTACT,ELEC:GROUNDING,CU BE CD PL	80009	131-1428-00
					ATTACHING PARTS		
-126	211-0097-00			1	SCREW,MACHINE:4-40 X 0.312,PNH,STL	TK0435	ORDER BY DESCR
-127	210-0851-00			1	WASHER,FLAT:0.119 ID X 0.375 OD X 0.025,STL	12327	ORDER BY DESCR
					END ATTACHING PARTS		
-128	342-0222-00			1	INSULATOR,PLATE:HIGH VOLTAGE,POLYESTER	80009	342-0222-00
-129	343-0088-00			1	CLAMP,CABLE:0.062 DIA,PLASTIC	80009	343-0088-00
-130	343-0213-00			2	CLAMP,CABLE:0.2 ID,PLASTIC	80009	343-0213-00
-131	----- -----			4	TRANSISTOR:(SEE Q1734,Q1756,Q1766,Q1776		
					REPL CHASSIS PARTS)		
					ATTACHING PARTS		
-132	343-0473-00			1	RETAINER,XSTR:ALUMINUM	80009	343-0473-00
-133	210-0457-00			3	NUT,PL,ASSEM WA:6-32 X 0.312,STL CD PL	78189	511-061800-00
					END ATTACHING PARTS		
-134	342-0214-00			1	INSULATOR,PLATE:TRANSISTOR	80009	342-0214-00
-135	----- -----			1	TRANSISTOR:(SEE Q1716 REPL CHASSIS PARTS)		
					ATTACHING PARTS		
-136	211-0097-00			1	SCREW,MACHINE:4-40 X 0.312,PNH,STL	TK0435	ORDER BY DESCR
-137	210-1122-00			1	WASHER,LOCK:0.12 ID,DISHED,0.025 THK,STL	86928	ORDER BY DESCR
					END ATTACHING PARTS		
-138	342-0224-00			1	INSULATOR,PLATE:TRANSISTOR,MICA	08530	ORDER BY DESCR
-139	----- -----			1	TRANSISTOR:(SEE Q1792 REPL CHASSIS PARTS)		
					ATTACHING PARTS		
-140	211-0182-00			1	SCR,ASSEM WSHR:2-56 X 0.312,PNH,BRS,NP,POZ	12360	ORDER BY DESCR
-141	210-1156-00			1	WASHER,SHLDR:0.091D X 0.20D X0.085D,NYL	80009	210-1156-00
					END ATTACHING PARTS		
-142	342-0166-00			1	INSULATOR,PLATE:TRANSISTOR,MICA	08530	ORDER BY DESCR
-143	214-1979-00			1	HEAT SINK,XSTR:1 EA 2-56/4-40 THD HOLES,AL	80009	214-1979-00
					ATTACHING PARTS		
-144	210-0586-00			2	NUT,PL,ASSEM WA:4-40 X 0.25,STL CD PL	78189	211-041800-00
					END ATTACHING PARTS		
-145	129-0413-01			1	SPACER,POST:0.538 L,4-40 TAP/STUD,STL	80009	129-0413-01
					ATTACHING PARTS		
-146	210-0994-00			1	WASHER,FLAT:0.125 ID X 0.25 OD X 0.022,STL	86928	A371-283-20
-147	210-0586-00			1	NUT,PL,ASSEM WA:4-40 X 0.25,STL CD PL	78189	211-041800-00
					END ATTACHING PARTS		
-148	385-0149-00			1	SPACER,POST:0.625 L W/4-40 THD EA END,NYL	TK0588	ORDER BY DESCR
					ATTACHING PARTS		
-149	211-0244-00			1	SCR,ASSEM WSHR:4-40 X 0.312,PNH STL	TK0858	211-0244-00

http://manoman.sqhill.com

Fig. & Index No.	Tektronix Part No.	Serial/Assembly No. Effective	Dscont	Qty	12345 Name & Description	Mfr. Code	Mfr. Part No.
3-150	210-0008-00			1	WASHER,LOCK:#8 INTL,0.02 THK,STL	77900	1208-00-00-0541C
					END ATTACHING PARTS		
-151	131-0382-00			1	TERMINAL,STUD:0.812 L,INSULATED	71279	5724822010516
					ATTACHING PARTS		
-152	210-0586-00			1	NUT,PL,ASSEM WA:4-40 X 0.25,STL CD PL	78189	211-041800-00
					END ATTACHING PARTS		
-153	----- -----			1	CKT BOARD ASSY:INTERFACE(SEE A6 REPL)		
					ATTACHING PARTS		
-154	129-0413-01			2	SPACER,POST:0.538 L,4-40 TAP/STUD,STL	80009	129-0413-01
-155	210-0994-00			2	WASHER,FLAT:0.125 ID X 0.25 OD X 0.022,STL	86928	A371-283-20
-156	211-0244-00			6	SCR,ASSEM WSHR:4-40 X 0.312,PNH STL	TK0858	211-0244-00
					END ATTACHING PARTS		
					CKT BOARD ASSY INCLUDES:		
-157	131-0566-00			19	.BUS,CONDUCTOR:DUMMY RES,0.094 OD X 0.225 L	24546	OMA 07
-158	136-0577-00			1	.CONN,RCPT,ELEC:CKT BOARD,15 CONTACT	22526	65001-015
-159	136-0499-14			1	.CONN,RCPT,ELEC:CIRCUIT BD,14 CONTACTS	00779	4-380949-4
-160	136-0499-16			1	.CONN,RCPT,ELEC:CIRCUIT BD,16 CONTACTS	00779	4-380949-6
-161	136-0252-07			29	.SOCKET,PIN CONN:W/O DIMPLE	22526	75060-012
-162	124-0175-01			1	.TERMINAL BOARD:2 NOTCH,CERAMIC,STUD MTD	80009	124-0175-01
	124-0119-00			1	.TERMINAL BOARD:2 NOTCH,CERAMIC,CLIP MTD	80009	124-0119-00
					ATTACHING PARTS		
-163	361-0007-00			2	.SPACER,SLEEVE:0.188 L X 0.111 ID,POLTHN	80009	361-0007-00
					END ATTACHING PARTS		
-164	131-0608-00			25	.TERMINAL,PIN:0.365 L X 0.025 BRZ GLD PL	22526	48283-036
-165	131-0787-00			24	.TERMINAL,PIN:0.64 L X 0.025 SQ PH BRZ	22526	47359-000
-166	----- -----			1	.SWITCH,PUSH:X10 MAG(SEE A6S1239 REPL)		
-167	361-0385-00			2	.SPACER,PB SW:0.164 L,GREEN POLYCARBONATE	80009	361-0385-00
-168	----- -----			1	.SWITCH,PUSH:BEAM FIND(SEE A6S400 REPL)		
-169	361-0385-00			2	.SPACER,PB SW:0.164 L,GREEN POLYCARBONATE	80009	361-0385-00
-170	376-0072-00			2	.CPLG HALF,SHAFT:0.125 ID X 0.562 OD,ACETAL	80009	376-0072-00
	213-0048-00			1	..SETSCREW:4-40 X 0.125,STL	TK0392	ORDER BY DESCR
-171	----- -----			2	.RES.,VARIABLE:(SEE A6R1526,R1529 REPL)		
					ATTACHING PARTS		
-172	210-0583-00			2	.NUT,PLAIN,HEX:0.25-32 X 0.312,BRS CD PL	73743	2X-20319-402
-173	210-0046-00			2	.WASHER,LOCK:0.261 ID,INTL,0.018 THK,STL	77900	1214-05-00-0541C
-174	210-0940-00			2	.WASHER,FLAT:0.25 ID X 0.375 OD X 0.02,STL	12327	ORDER BY DESCR
					END ATTACHING PARTS		
-175	342-0242-00			1	.INSUL,VAR RES:.700X.500 POLY	80009	342-0242-00
-176	386-2433-00			2	.SUPPORT,VAR RES:CIRCUIT BOARD MOUNTING	80009	386-2433-00
-177	214-0579-02	B020000	B020085	19	.TERM,TEST POINT:BRASS	10392	ORDER BY DESCR
	214-0579-02	B020086		16	.TERM,TEST POINT:BRASS	10392	ORDER BY DESCR
	131-0608-00	B020086		3	.TERMINAL,PIN:0.365 L X 0.025 BRZ GLD PL	22526	48283-036
-178	214-0973-00			1	.HEAT SINK,XSTR:TO-92,CU BE CD PL	80009	214-0973-00
-179	344-0154-00			2	.CLIP,ELECTRICAL:FUSE,CKT BD MT	80009	344-0154-00
-180	342-0221-00			1	INSULATOR,FILM:MAIN CHASSIS,MYLAR	80009	342-0221-00
	179-2741-01			1	WIRING HARNESS:	80009	179-2741-01
					.CA ASSY,RF:50 OHM COAX 18.0 L 9-6		
					.CA ASSY,RF:50 OHM COAX 22.0 L 9-8		
					.CA ASSY,RF:50 OHM COAX 123.0 L 9-04		
					.CA ASSY,RF:50 OHM COAX 28.0 L 9-2		
					.CA ASSY,RF:50 OHM COAX 22.0 L 9-3		
					.CA ASSY,RF:50 OHM COAX 22.0 L 9-1		
					.CA ASSY,RF:50 OHM COAX 22.0 L 9-4		
					.CA ASSY,RF:50 OHM COAX 19.0 L 9-5		
					.CA ASSY,RF:50 OHM COAX 22.0 L 9-03		
					.CA ASSY,RF:50 OHM COAX 30.0 L 9-0		
					.EYELET,METALLIC:0.152 OD X 0.245 INCH L,BR		
					.EYELET,METALLIC:0.126 OD X 0.23 INCH L,BR		
	343-0549-00			18	.STRAP,TIEDOWN,E:0.091 W X 4.0 L,ZYTEL	06383	PLT1M
	175-2219-00			1	CA ASSY,SP,ELEC:2,1.2MM OD,500MM L	80009	175-2219-00
					.CABLE ASSY:2,26 AWG,STRD PVC JKT RBN		
	179-2169-00			1	WIRING HARNESS:POWER ON	80009	179-2169-00
	343-0549-00			3	.STRAP,TIEDOWN,E:0.091 W X 4.0 L,ZYTEL	06383	PLT1M

http://manoman.sqhill.com

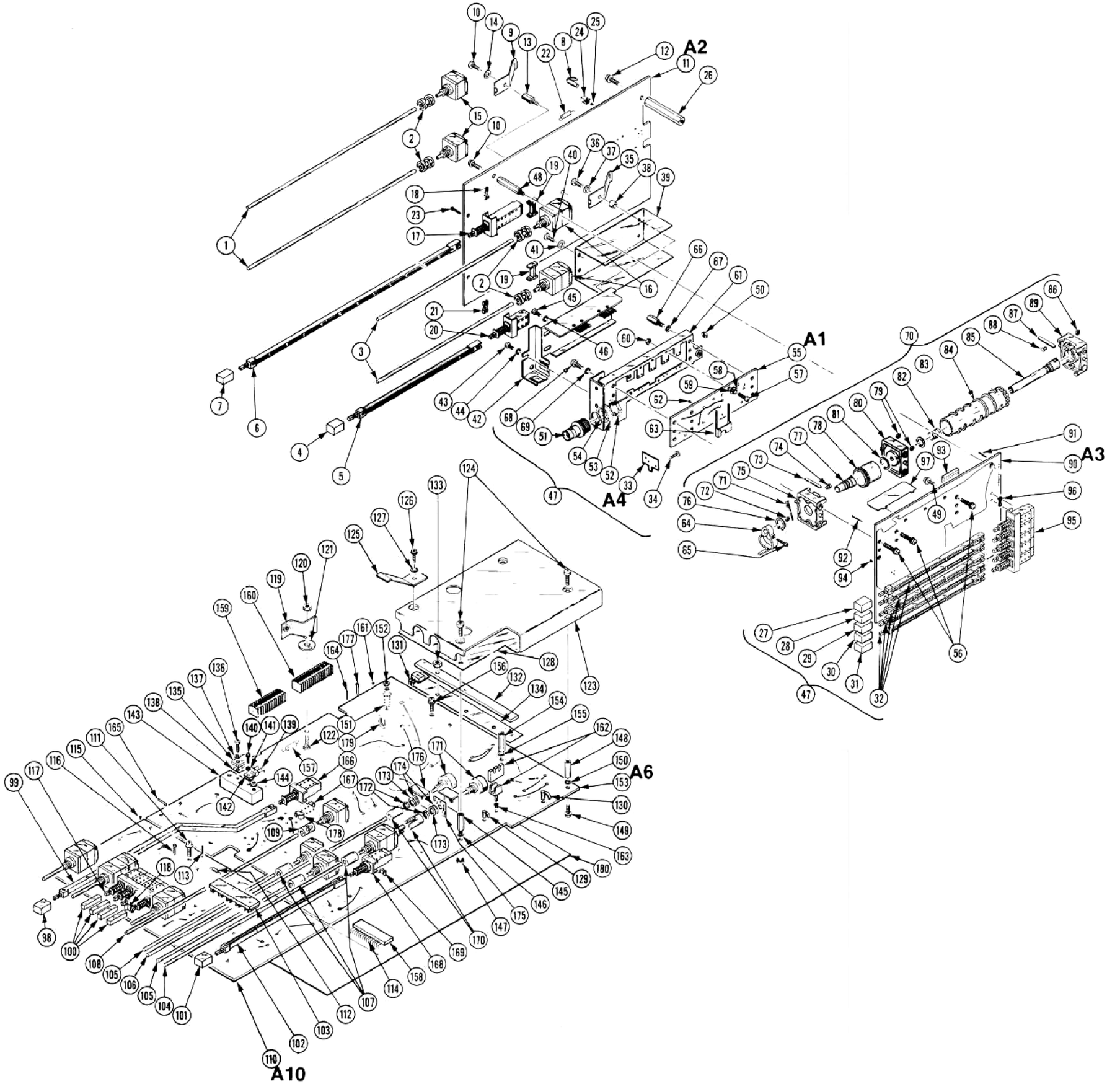

REV OCT 1984

http://manoman.sqhill.com

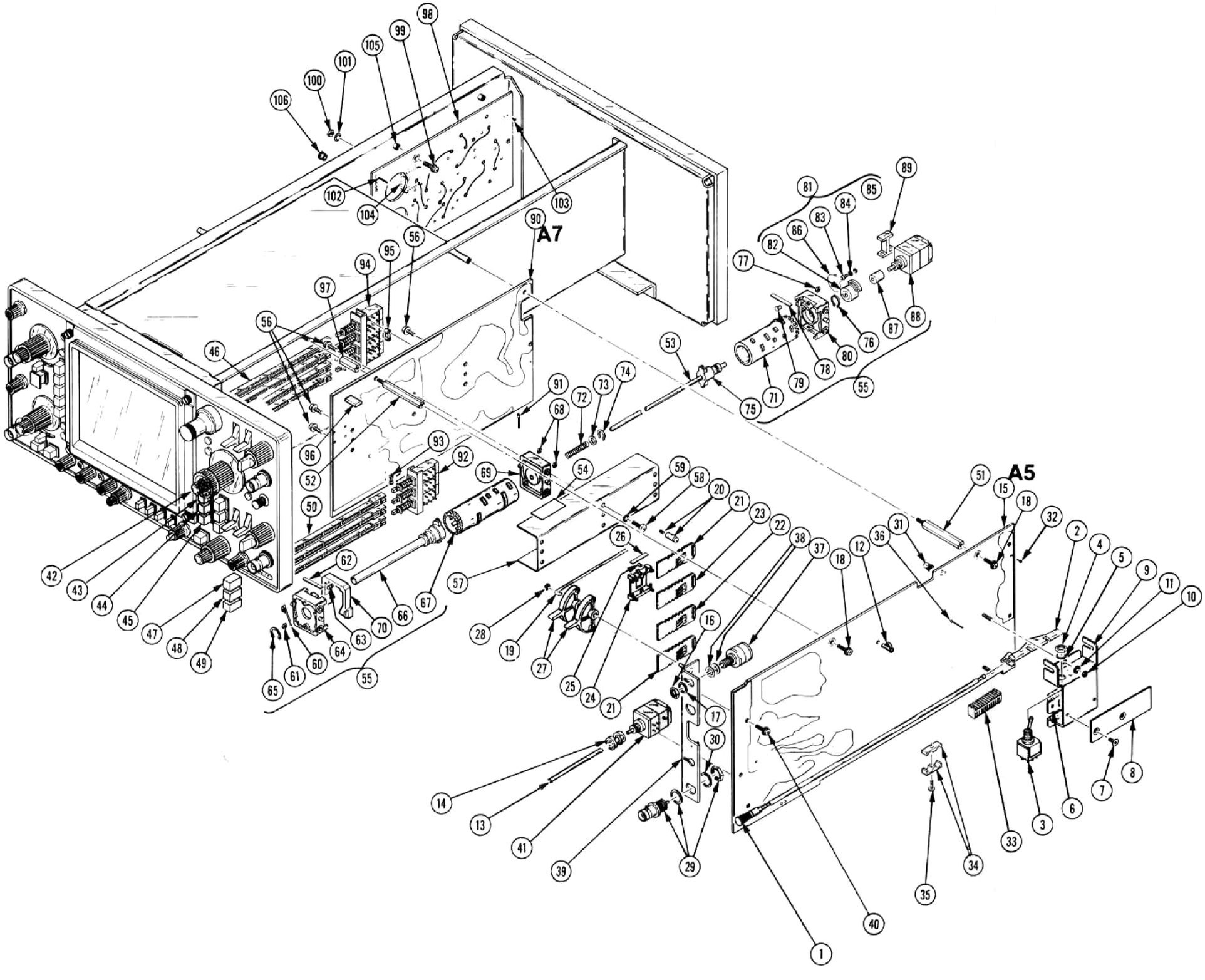

ADD OCT 1984

http://manoman.sqhill.com

Fig. & Index No.	Tektronix Part No.	Serial/Assembly No. Effective	Dscont	Qty	12345 Name & Description	Mfr. Code	Mfr. Part No.
4-1	384-1159-00			1	KNOB:10.384 L X 0.125 OD,AL	80009	384-1159-00
-2	214-1756-00			1	ACTUATOR,SWITCH:POWER	80009	214-1756-00
-3	----- -----			1	SWITCH,TOGGLE:POWER ON(SEE S1701 REPL)		
					ATTACHING PARTS		
-4	210-0562-00			1	NUT,PLAIN,HEX:0.25-40 X 0.312 BRS CD PL	73743	20224-402
-5	210-0046-00			1	WASHER,LOCK:0.261 ID,INTL,0.018 THK,STL	77900	1214-05-00-0541C
					END ATTACHING PARTS		
-6	----- -----			1	SWITCH,SLIDE:LINE SELECT(SEE S1703 REPL)		
					ATTACHING PARTS		
-7	211-0101-00			2	SCREW,MACHINE:4-40 X 0.25,FLH,100 DEG,STL	TK0435	ORDER BY DESCR
					END ATTACHING PARTS		
-8	200-1526-00			1	COV,INV SW HOLE:	80009	200-1526-00
-9	407-1133-00			1	BRACKET,ELEC SW:ALUMINUM	80009	407-1133-00
					ATTACHING PARTS		
-10	210-0406-00			2	NUT,PLAIN,HEX:4-40 X 0.188,BRS CD PL	73743	12161-50
-11	210-0994-00			2	WASHER,FLAT:0.125 ID X 0.25 OD X 0.022,STL	86928	A371-283-20
					END ATTACHING PARTS		
-12	343-0213-00			1	CLAMP,CABLE:0.2 ID,PLASTIC	80009	343-0213-00
-13	384-1238-00			1	EXTENSION SHAFT:1.375 L X 0.125 OD,AL	80009	384-1238-00
-14	376-0051-00			1	CPLG,SHAFT,FLEX:0.127 ID X 0.375 OD,DELRIN	80009	376-0051-00
	213-0022-00			4	.SETSCREW:4-40 X 0.188,STL	74445	ORDER BY DESCR
-15	----- -----			1	CKT BOARD ASSY:TRIG GEN/SWP (SEE A5 REPL)		
					ATTACHING PARTS		
-16	210-0583-00			2	NUT,PLAIN,HEX:0.25-32 X 0.312,BRS CD PL	73743	2X-20319-402
-17	210-0940-00			2	WASHER,FLAT:0.25 ID X 0.375 OD X 0.02,STL	12327	ORDER BY DESCR
-18	211-0244-00			3	SCR,ASSEM WSHR:4-40 X 0.312,PNH STL	TK0858	211-0244-00
					END ATTACHING PARTS		
					CKT BOARD ASSY INCLUDES:		
-19	384-1160-00			4	.EXTENSION SHAFT:LEVER SWITCH	91260	ORDER BY DESCR
-20	376-0212-00			4	.COUPLER,SL SW:	80009	376-0212-00
	213-0048-00			1	..SETSCREW:4-40 X 0.125,STL	TK0392	ORDER BY DESCR
-21	----- -----			2	.ACTUATOR,SL SW:A,B (SEE A5S515,S615 REPL)		
-22	----- -----			1	.ACTUATOR,SL SW:A SOURCE(SEE A5S610 REPL)		
-23	----- -----			1	.ACTUATOR,SL SW:B SRCE(SEE A5S510A,B REPL)		
-24	351-0355-01			4	.GUIDE,SLIDE SW:W/SPR & DETENT. 465/475	80009	351-0355-01
-25	214-1127-00			8	..ROLLER,DETENT:0.125 DIA X 0.125,SST	80009	214-1127-00
-26	214-1126-02			8	..SPRING,FLAT:0.7 X 0.125,CU BE RED CLR	80009	214-1126-02
-27	214-1770-00			4	.LEVER,SLIDE SW:	80009	214-1770-00
					ATTACHING PARTS		
-28	354-0165-00			2	.RING,RETAINING:TYPE E EXT,U/O 0.156 OD SFT	97464	1000-15-ZD
					END ATTACHING PARTS		
-29	----- -----			2	.CONNECTOR,RCPT:BNC(SEE A5J500,600 REPL)		
					ATTACHING PARTS		
-30	210-0012-00			2	.WASHER,LOCK:0.384 ID,INTL,0.022 THK,STL	09772	ORDER BY DESCR
					END ATTACHING PARTS		
-31	131-1003-00			8	.CONN,RCPT,ELEC:CKT BD MT,3 PRONG	80009	131-1003-00
-32	136-0252-07			20	.SOCKET,PIN CONN:W/O DIMPLE	22526	75060-012
-33	136-0499-12			2	.CONN,RCPT,ELEC:CKT BD,1X12,0.1 SPACING,TIN	00779	4-380949-2
-34	200-0945-00			2	.COVER HALF,XSTR:DUAL TO-18 ALUMINUM	80009	200-0945-00
	200-0945-01			2	.COVER HALF,XSTR:DUAL TO-18 W/2-56 THD AL	80009	200-0945-01
					ATTACHING PARTS		
-35	211-0062-00			2	.SCREW,MACHINE:2-56 X 0.312,PNH,STL	06950	ORDER BY DESCR
					END ATTACHING PARTS		
-36	131-0608-00			22	.TERMINAL,PIN:0.365 L X 0.025 BRZ GLD PL	22526	48283-036
-37	----- -----			2	.RES.,VAR,NONWIR:TRIG(SEE A5R530,R630 REPL)		
-38	210-0940-00			4	.WASHER,FLAT:0.25 ID X 0.375 OD X 0.02,STL	12327	ORDER BY DESCR
-39	407-1442-00			1	.BRACKET,CKT BD:	80009	407-1442-00
					ATTACHING PARTS		
-40	211-0207-00			2	.SCR,ASSEM WSHR:4-40 X 0.312,PNH,STL,CD PL	78189	ORDER BY DESCR
					END ATTACHING PARTS		
-41	----- -----			1	.RES.,VARIABLE:(SEE A5R948 REPL)		
-42	366-1489-36			1	PUSH BUTTON:SIL GY,A LOCK KNOBS	80009	366-1489-36
-43	366-1402-29			1	PUSH BUTTON:SIL GY,MIX	80009	366-1402-29
-44	366-1402-44			1	PUSH BUTTON:SIL GY,A INTEN	80009	366-1402-44
-45	366-1402-35			1	PUSH BUTTON:SIL GY,B DLY'D	80009	366-1402-35
-46	384-1058-00			4	EXTENSION SHAFT:8.157 L	80009	384-1058-00
-47	366-1402-38			1	PUSH BUTTON:SIL GY,AUTO	80009	366-1402-38
-48	366-1402-39			1	PUSH BUTTON:SIL GY,NORM	80009	366-1402-39

http://manoman.sqhill.com

Fig. & Index No.	Tektronix Part No.	Serial/Assembly No. Effective	Dscont	Qty	12345 Name & Description	Mfr. Code	Mfr. Part No.
4-49	366-1257-29			1	PUSH BUTTON:SIL GY,SINGL SWP	80009	366-1257-29
-50	384-1101-00			3	EXTENSION SHAFT:4.14 L X 0.187 SQ,PLASTIC	80009	384-1101-00
-51	----- -----			1	CKT BOARD ASSY:TIME/DIV(SEE A7 ASSY REPL)		
					ATTACHING PARTS		
-52	129-0386-01			2	SPACER,POST:1.593 L,4-40 TAP/STUD,STL	80009	129-0386-01
					END ATTACHING PARTS		
					TIMING BOARD ASSY INCLUDES:		
-53	384-1279-00			1	.EXTENSION SHAFT:10.275 L X 0.081 OD,SST	80009	384-1279-00
-54	334-3448-00			2	.MARKER,IDENT:MARKED NOTICE	07416	ORDER BY DESCR
-55	----- -----			1	.SW CAM ACTR AS:TIME/CM(SEE A7S1150 REPL)		
					ATTACHING PARTS		
-56	211-0244-00			8	.SCR,ASSEM WSHR:4-40 X 0.312,PNH STL	TK0858	211-0244-00
					END ATTACHING PARTS		
					.ACTUATOR ASSY INCLUDES:		
-57	200-1747-00			1	..COVER,CAM SW:11 & 27 ELEMENTS	80009	200-1747-00
					ATTACHING PARTS		
-58	211-0008-00			8	..SCREW,MACHINE:4-40 X 0.25,PNH,STL	93907	ORDER BY DESCR
-59	210-0004-00			8	..WASHER,LOCK:#4 INTL,0.015 THK,STL	77900	1204-00-00-0541C
					END ATTACHING PARTS		
-60	131-0963-00			1	..CONTACT,ELEC:GROUNDING,PH BRZ,W/BRACKET	TK0507	ORDER BY DESCR
-61	210-0406-00			6	..NUT,PLAIN,HEX:4-40 X 0.188,BRS CD PL	73743	12161-50
-62	214-1139-02			1	..SPRING,FLAT:0.885 X 0.156 CU BE GRN CLR	80009	214-1139-02
	214-1139-03			1	..SPRING,FLAT:0.885 X 0.156 CU BE RED CLR	80009	214-1139-03
-63	214-1752-00			2	..ROLLER,DETENT:0.125 OD X 0.16,SST	80009	214-1752-00
-64	401-0180-00			1	..BEARING,CAM SW:FR & REAR,0.80 & 0.83 DIA	80009	401-0180-00
					ATTACHING PARTS		
-65	354-0390-00			1	..RING,RETAINING:BASIC EXT,U/O 0.375 DIA SFT	79136	5100-37-ZD
					END ATTACHING PARTS		
-66	384-0878-03			1	..SHAFT,CAM SW:3.779 L X 0.248 OD OUTER CONCE	80009	384-0878-03
					..NTRIC W/DRIVER		
-67	105-0626-01			1	..ACTUATOR,CAM SW:TIME/CM,FRONT	80009	105-0626-01
-68	210-0406-00			4	..NUT,PLAIN,HEX:4-40 X 0.188,BRS CD PL	73743	12161-50
-69	401-0178-03			1	..BEARING,CAM SW:CENTER/REAR	80009	401-0178-03
-70	407-1199-03			3	..BRACKET,COVER:PLASTIC,FINISHED	80009	407-1199-03
-71	105-0627-01			1	..ACTUATOR,CAM SW:TIME/CM,REAR	80009	105-0627-01
					ATTACHING PARTS		
-72	214-1416-00			1	..SPRING,HLCPS:0.176 X 0.835,CLSD END,STL	80009	214-1416-00
-73	210-1160-00			1	..WASHER,FLAT:0.129 ID X 0.25 OD X 0.031	86928	5612-32-31
-74	354-0392-00			1	..RING,RETAINING:EXT GRIP,U/O 0.125 DIA SFT	79136	5555-12ZD
-75	384-0882-04			1	..SHAFT,CAM SW:9.325 L,0.125 OD INTMD CNCTRC	80009	384-0882-04
-76	354-0445-00			1	..RING,RETAINING:BASIC EXT,U/O 0.25 DIA SFT	79136	5100-25
					END ATTACHING PARTS		
-77	210-0406-00			4	..NUT,PLAIN,HEX:4-40 X 0.188,BRS CD PL	73743	12161-50
-78	214-1139-02			1	..SPRING,FLAT:0.885 X 0.156 CU BE GRN CLR	80009	214-1139-02
	214-1139-03			1	..SPRING,FLAT:0.885 X 0.156 CU BE RED CLR	80009	214-1139-03
-79	214-1752-00			2	..ROLLER,DETENT:0.125 OD X 0.16,SST	80009	214-1752-00
-80	401-0204-01			1	..BEARING,CAM SW:W/INSERT	80009	401-0204-01
-81	105-0449-00			1	..STOP ASSY,CAM:CAM SW ACTUATOR	80009	105-0449-00
-82	352-0349-00			1	...HOLDER,STOP PIN:ZAMAK	80009	352-0349-00
	213-0048-00			1	...SETSCREW:4-40 X 0.125,STL	TK0392	ORDER BY DESCR
-83	105-0409-00			1	...STOP,SHAFT:CAM SW DRUM	80009	105-0409-00
-84	361-0535-00			1	...SPACER,RING:0.03 L X 0.13 ID,BRS	80009	361-0535-00
-85	354-0291-00			1	...RING,RETAINING:EXT,CRESCENT,U/O 0.125 DIA	79136	5103-12MD
-86	214-1812-00			1	...SPR,HLCL,TRSN:0.832 OD,LOOP ENDS,MUW	80009	214-1812-00
-87	376-0039-00			1	.CPLG,SHAFT,RGD:0.082 & 0.128 ID,AL	80009	376-0039-00
	213-0075-00			2	..SETSCREW:4-40 X 0.094,STL	74445	ORDER BY DESCR
-88	----- -----			1	.RES.,VARIABLE:(SEE A7R1140/S1140 REPL)		
-89	361-0515-00			1	.SPACER,SWITCH:0.176 L,ACETAL	80009	361-0515-00
-90	----- -----			1	.CKT BOARD ASSY:TIMING(SEE A7 REPL)		
-91	131-0787-00			29	..TERMINAL,PIN:0.64 L X 0.025 SQ PH BRZ	22526	47359-000
-92	----- -----			1	..SWITCH,PUSH:TRIG MODE (SEE A7S1100 REPL)		
-93	361-0542-00			4	..SPACER,PUSH SW:0.078 L,POLYPROPYLENE	71590	PCS-078
-94	----- -----			1	..SWITCH,PUSH:HORIZ DISP(SEE A7S1120 REPL)		
-95	361-0385-00			4	..SPACER,PB SW:0.164 L,GREEN POLYCARBONATE	80009	361-0385-00
-96	131-0993-00			1	BUS,CONDUCTOR:SHUNT ASSEMBLY,BLACK	22526	65474-005
-97	129-0419-00			1	SPACER,POST:0.588 L,4-40,AL,0.25 HEX	80009	129-0419-00
-98	----- -----			1	CKT BOARD ASSY:VERT OUTPUT(SEE A4 REPL)		
					ATTACHING PARTS		

http://manoman.sqhill.com

Fig. & Index No.	Tektronix Part No.	Serial/Assembly No. Effective	Dscont	Qty	12345 Name & Description	Mfr. Code	Mfr. Part No.
4-99	211-0244-00			2	SCR,ASSEM WSHR:4-40 X 0.312,PNH STL	TK0858	211-0244-00
-100	220-0456-00			1	NUT,PLAIN,HEX:6-32 X 0.25 HEX,SST	73743	9038
-101	210-1092-00			1	WASHER,FLAT:0.147 ID X 0.312 OD X 0.028	86928	5714-33-32N
					END ATTACHING PARTS		
					CKT BOARD ASSY INCLUDES:		
-102	131-0608-00			5	.TERMINAL,PIN:0.365 L X 0.025 BRZ GLD PL	22526	48283-036
-103	136-0252-07	B200000	B201060	3	.SOCKET,PIN CONN:W/O DIMPLE .(DM44)	22526	75060-012
	136-0252-07	B201061		2	.SOCKET,PIN CONN:W/O DIMPLE .(466)	22526	75060-012
	136-0252-00			16	.SOCKET,PIN TERM:U/W 0.019 DIA PINS	00779	2-330808-7
	136-0252-07	B200000	B200998	3	.SOCKET,PIN CONN:W/O DIMPLE	22526	75060-012
	136-0252-07	B200999		2	.SOCKET,PIN CONN:W/O DIMPLE	22526	75060-012
-104	407-1149-00			1	.BRKT,MICROCKT:GROUNDING,BRASS	80009	407-1149-00
-105	361-0008-00			3	SPACER,SLEEVE:0.28 L X 0.111 ID,PP	80009	361-0008-00
-106	348-0063-00			1	GROMMET,PLASTIC:GRAY,ROUND,0.0457 ID	80009	348-0063-00

http://manoman.sghill.com

Fig. & Index No.	Tektronix Part No.	Serial/Assembly No. Effective	Dscont	Qty	12345 Name & Description	Mfr. Code	Mfr. Part No.
5-1	200-1412-00			1	COVER,SCOPE:FRONT	TK2165	ORDER BY DESCR
	200-1723-00			1	COVER,SCOPE:FRONT	TK2165	ORDER BY DESCR
	367-0172-03			1	HANDLE,CARRYING:12.722 L,BLK VNL W/HRDWR	80009	367-0172-03
-2	334-2320-00			1	.PLATE,IDENT:MKD 466 OSCILLOSCOPE	80009	334-2320-00
-3	200-0602-00			2	.COVER,HDL LATCH:2.12 DIA X 0.7,ACETAL	TK2165	ORDER BY DESCR
-4	367-0172-00			1	.HANDLE,CARRYING:12.722 L,BLACK VINYL	80009	367-0172-00
					ATTACHING PARTS		
-5	213-0227-00			4	.SCREW,TPG,TF:6-32 X 0.5,SPCL TYPE,FLH	83486	ORDER BY DESCR
					END ATTACHING PARTS		
-6	214-0516-00	B200000	B201738	2	.SPRING,HLCPS:0.959 OD X 1.281 L,CLE,SST	04811	ORDER BY DESCR
	214-3024-00	B201739		2	.SPRING,HLCPS:0.96 OD X 1.35 ,CLE,SST	80009	214-3024-00
-7	214-1987-00			2	.INDEX,HDL RING:	80009	214-1987-00
-8	214-0515-02			2	.HUB,HDL INDEX:1.42 DIA X 0.565 THK	80009	214-0515-02
					ATTACHING PARTS		
-9	210-0805-00			2	.WASHER,FLAT:0.204 ID X 0.438 OD X 0.032,STL	12327	ORDER BY DESCR
-10	213-0139-01			2	.SCREW,SLFLKG:10-24 X 0.375,HEX HD,STL	26233	P38AS 1024 6C
					END ATTACHING PARTS		
-11	437-0169-00			1	CABINET,SCOPE:	80009	437-0169-00
-12	348-0080-01			4	.FOOT,CABINET:CHARCOAL GRAY,POLYURETHANE	80009	348-0080-01
-13	352-0263-01			1	.HLDR,POUCH ASSY:TEK BLUE POLYCARBONATE	80009	352-0263-01
					.(SUBPART OF STANDARD CABINET ONLY)		

http://manoman.sghill.com

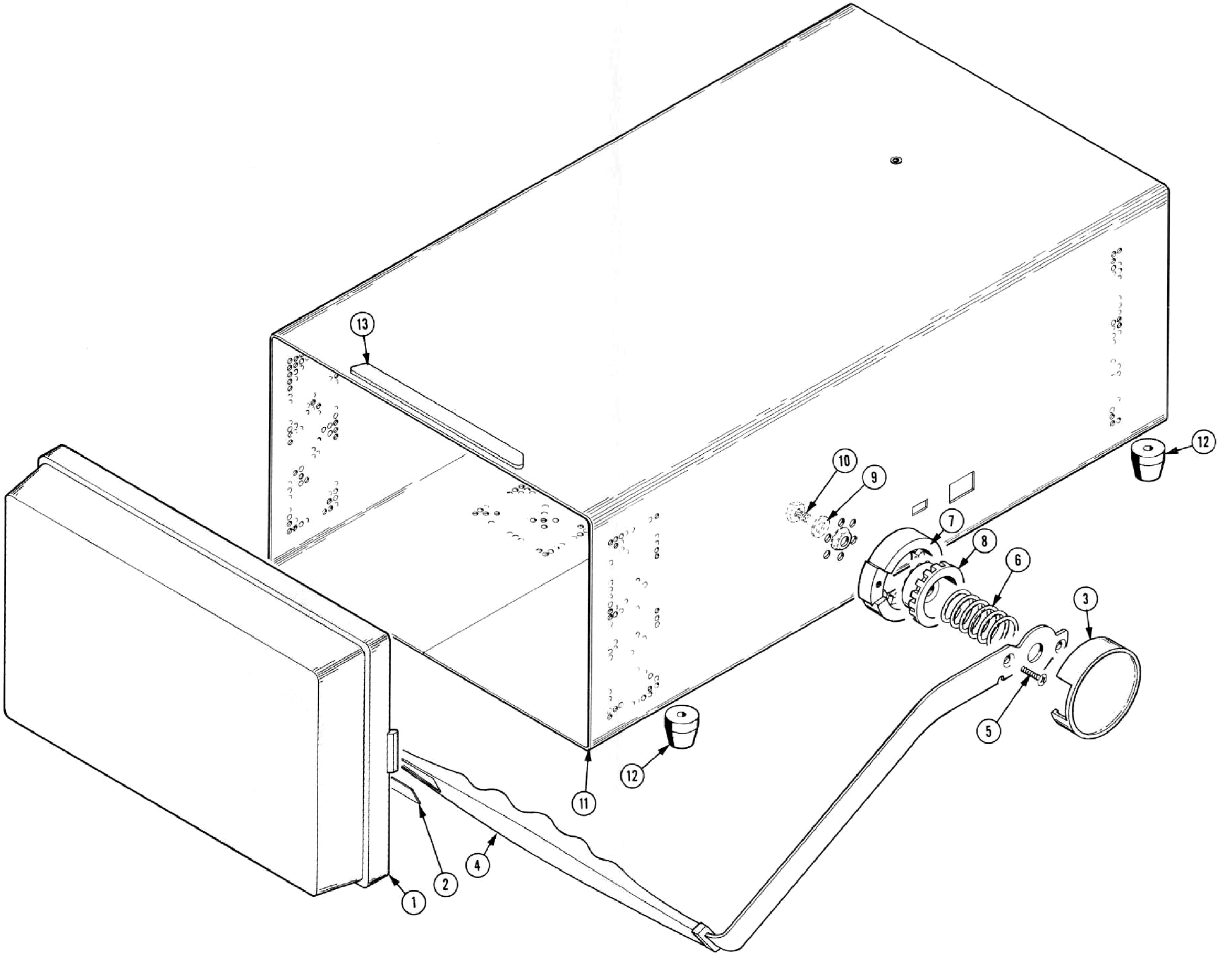

http://manoman.sqhill.com

Fig. & Index No.	Tektronix Part No.	Serial/Assembly No. Effective	Dscont	Qty	12345 Name & Description	Mfr. Code	Mfr. Part No.
6-							
					OPTION 04		
	119-0376-01			1	FILTER,RFI:2 X 3A,250VAC,400HZ	TK2038	ORDER BY DESCR
					ATTACHING PARTS		
	211-0038-00			1	SCREW,MACHINE:4-40 X 0.312,FLH,100 DEG,STL	TK0435	ORDER BY DESCR
	210-0586-00			1	NUT,PL,ASSEM WA:4-40 X 0.25,STL CD PL	78189	211-041800-00
					END ATTACHING PARTS		
	131-0707-00			1	CONTACT,ELEC:22-26 AWG,BRS,CU BE GLD PL	22526	47439-000
	131-0708-00			1	CONTACT,ELEC:28-32 AWG,BRS,CU BE GLD PL	22526	47437-000
	131-1310-00			1	CONTACT,ELEC:MESH FILTER GROUND	80009	131-1310-00
	----- -----			4	CONN,RCPT,ELEC:BNC,FEMALE		
					(SEE J145,J159,J859,J918 REPL)		
	179-2741-02			1	WIRING HARNESS:	80009	179-2741-02
	210-0774-00			2	EYELET,METALLIC:0.152 X 0.218,BRS	80009	210-0774-00
	210-0775-00			2	EYELET,METALLIC:0.126 X 0.205,BRS	80009	210-0775-00
	378-0726-00			1	FILTER,MESH:EMI	80009	378-0726-00
	348-0239-00			1	GROMMET,PLASTIC:DK GRAY,U-SHAPE,0.27 ID	80009	348-0239-00
					OPTION 05		
	441-1205-00			1	CHASSIS,SCOPE:SYNC SEPARATOR	80009	441-1205-00
	179-2194-01			1	WIRING HARNESS:	80009	179-2194-01
	198-2318-00			1	WIRE SET,ELEC:	80009	198-2318-00
					OPTION 07		
-1	441-1171-00			1	CHASSIS,SCOPE:INVERTER	80009	441-1171-00
					ATTACHING PARTS		
-2	211-0008-00			2	SCREW,MACHINE:4-40 X 0.25,PNH,STL	93907	ORDER BY DESCR
-3	210-0994-00			2	WASHER,FLAT:0.125 ID X 0.25 OD X 0.022,STL	86928	A371-283-20
					END ATTACHING PARTS		
-4	----- -----			1	CIRCUIT BD ASSY:INVERTER		
					(SEE A13 REPL)		
					ATTACHING PARTS		
-5	211-0244-00			2	SCR,ASSEM WSHR:4-40 X 0.312,PNH STL	TK0858	211-0244-00
					END ATTACHING PARTS		
-6	136-0252-07			12	.SOCKET,PIN CONN:W/O DIMPLE	22526	75060-012
-7	----- -----			1	.XFMR,TOROID:		
					.(SEE A13T1601 REPL)		
					ATTACHING PARTS		
-8	343-0443-00			1	.RETAINER,XFMR:ACETAL,NATURAL	TK1319	N/A
-9	212-0011-00			1	.SCREW,MACHINE:8-32 X 0.75,FLH,100 DEG,STL	TK0433	ORDER BY DESCR
-10	210-0409-00			1	.NUT,PLAIN,HEX:8-32 X 0.312,BRS CD PL	73743	3046-402
					END ATTACHING PARTS		
-11	----- -----			4	TRANSISTOR:SELECTED		
					(SEE Q1652,Q1654,Q1662,Q1664 REPL)		
					ATTACHING PARTS		
-12	210-0586-00			3	NUT,PL,ASSEM WA:4-40 X 0.25,STL CD PL	78189	211-041800-00
-13	343-0451-00			1	RETAINER,XSTR:ALUMINUM	80009	343-0451-00
					END ATTACHING PARTS		
-14	342-0195-00			1	INSULATOR,PLATE:TRANSISTOR,MICA	08530	ORDER BY DESCR
-15	348-0141-00			1	GROMMET,PLASTIC:BLACK,U-SHAPE,0.524 ID	80009	348-0141-00
-16	348-0055-00			1	GROMMET,PLASTIC:GRAY,ROUND,0.207 ID	80009	348-0055-00
-17	352-0031-00			1	FUSEHOLDER,BLK:3AG,15A,250V	75915	357-001
					ATTACHING PARTS		
-18	211-0507-00			1	SCREW,MACHINE:6-32 X 0.312,PNH,STL	83385	ORDER BY DESCR
-19	210-0006-00			1	WASHER,LOCK:#6 INTL,0.018 THK,STL	77900	1206-00-00-0541C
-20	210-0407-00			1	NUT,PLAIN,HEX:6-32 X 0.25,BRS CD PL	73743	3038-402
					END ATTACHING PARTS		
-21	407-1341-00			1	BRACKET,ELEC SW:ALUMINUM	80009	407-1341-00
-22	----- -----			6	SWITCH,SENS:SUBMINIATURE,10A,125/240VAC		
					(SEE S1765 REPL)		
-23	105-0479-00			1	ACTUATOR,SWITCH:SLIDE,INVERTER	TK1319	N/A
					(SEE S1765 REPL)		
					ATTACHING PARTS		
-24	211-0212-00			2	SCREW,MACHINE:2-56 X 1.75,PNH,STL	TK0435	8484-300
-25	210-0405-00			2	NUT,PLAIN,HEX:2-56 X 0.188,BRS CD PL	73743	12157-50

http://manoman.sqhill.com

Fig. & Index No.	Tektronix Part No.	Serial/Assembly No. Effective	Dscont	Qty	12345 Name & Description	Mfr. Code	Mfr. Part No.
6-					END ATTACHING PARTS		
-26	214-1925-00			1	SPRING,SW ACTR:POWER SOURCE	80009	214-1925-00
-27	386-2649-00			1	PL,ACTR GUIDE:INVERTER	80009	386-2649-00
-28	----- -----			1	SWITCH,TOGGLE:DPDT,5A,125VAC,ON-ON (SEE S1601 REPL)		
					ATTACHING PARTS		
-29	210-0562-00			1	NUT,PLAIN,HEX:0.25-40 X 0.312 BRS CD PL	73743	20224-402
-30	210-0046-00			1	WASHER,LOCK:0.261 ID,INTL,0.018 THK,STL	77900	1214-05-00-0541C
					END ATTACHING PARTS		
-31	----- -----			1	CONN,RCPT,ELEC:PWR,MALE,125VAC,15A (SEE P1601 REPL)		
					ATTACHING PARTS		
-32	211-0038-00			2	SCREW,MACHINE:4-40 X 0.312,FLH,100 DEG,STL	TK0435	ORDER BY DESCR
-33	210-0586-00			2	NUT,PL,ASSEM WA:4-40 X 0.25,STL CD PL	78189	211-041800-00
					END ATTACHING PARTS		
-34	210-0204-00			1	TERMINAL,LUG:0.142 ID,LOCKING,BRZ TINNED	86928	A373-175
	210-0202-00			1	TERMINAL,LUG:0.146 ID,LOCKING,BRZ TIN PL	86928	A-373-158-2
-35	334-2268-00			1	MARKER,IDENT:MKD DC POWER DATA	80009	334-2268-00
-36	348-0365-00			4	FOOT,CABINET:BLACK ANODIZED AL	TK2165	ORDER BY DESCR
					ACCESSORIES FOR OPTION 07		
	161-0094-00			1	CABLE ASSY,PWR,:3,18AWG,125V,36.0 L	70903	ORDER BY DESCR

http://manoman.sqhill.com

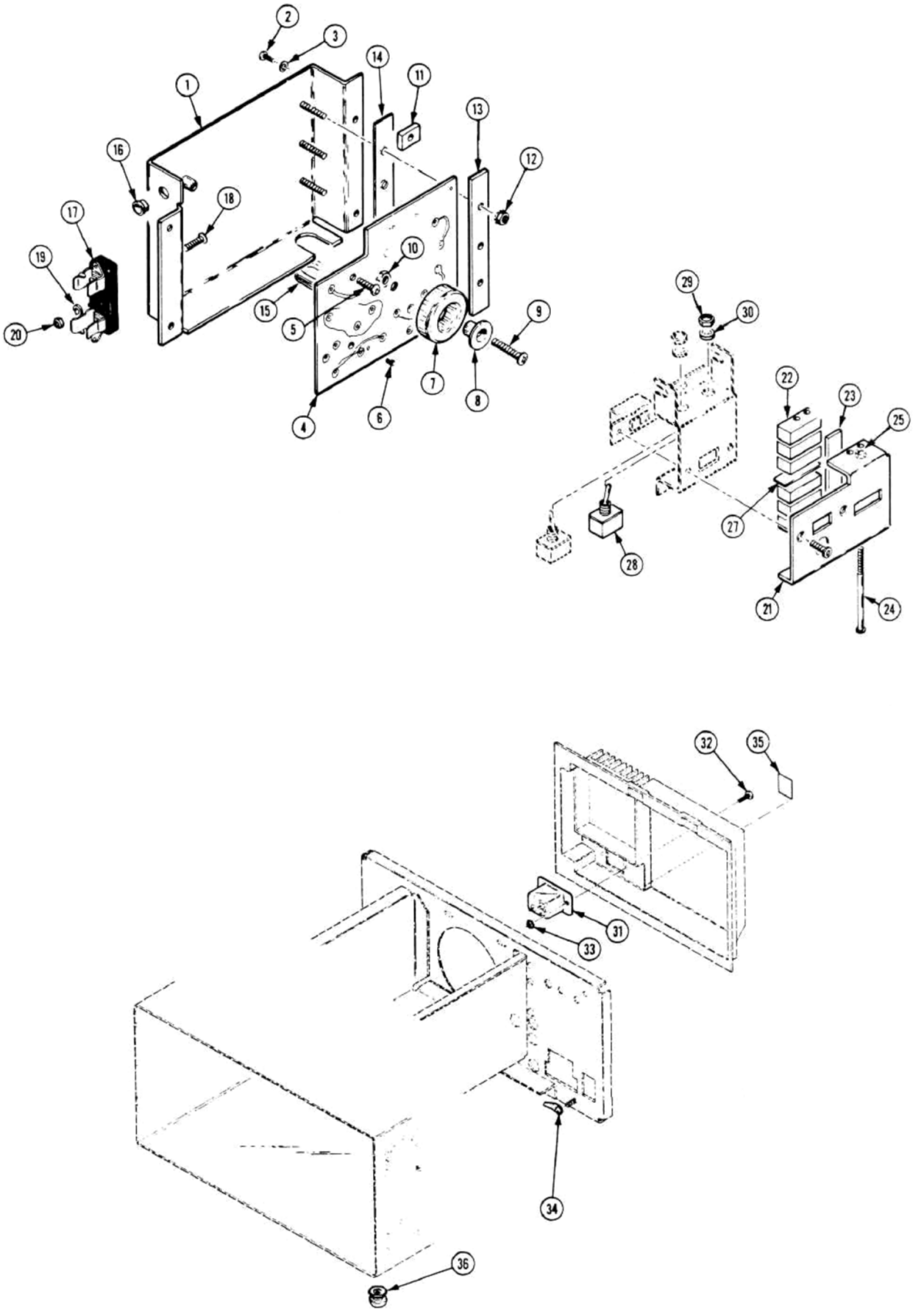

REV OCT 1985

466 OSCILLOSCOPE

http://manoman.sqhill.com

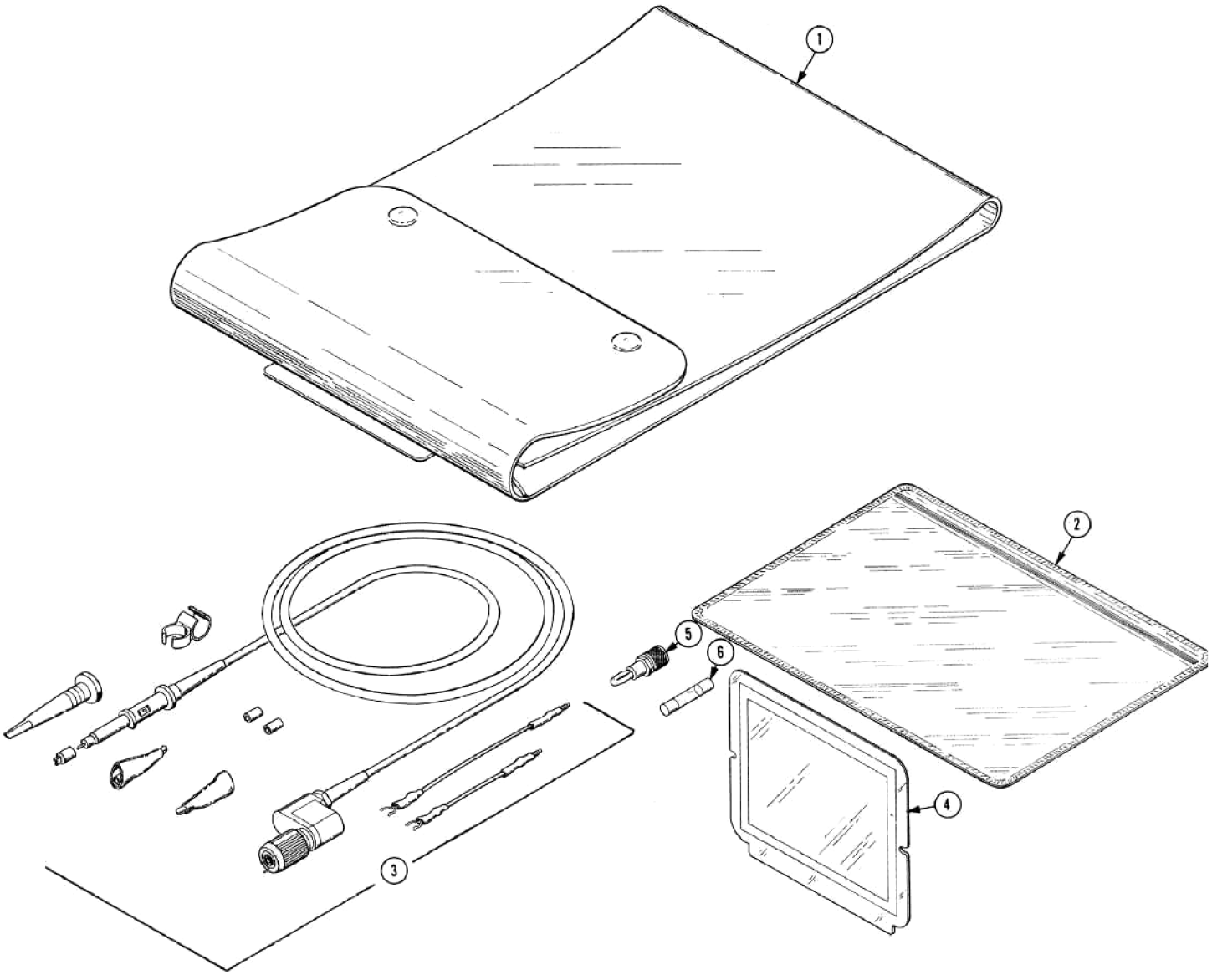

http://manoman.sqhill.com

Fig. & Index No.	Tektronix Part No.	Serial/Assembly No. Effective	Dscont	Qty	12345 Name & Description	Mfr. Code	Mfr. Part No.
7-					STANDARD ACCESSORIES		
-1	016-0535-04	B200000	B200631	1	ACCESSORY POUCH:W/HARDWARE (W/O DM)	80009	016-0535-04
	016-0535-10	B200632		1	ACCESSORY POUCH:W/HARDWARE (W/O DM)	80009	016-0535-10
	016-0594-02	B200000	B200771	1	ACCESSORY POUCH: (WITH DM)	80009	016-0594-02
	016-0594-07	B200772		1	ACCESSORY POUCH: (WITH DM)	80009	016-0594-07
-2	016-0537-00			1	POUCH,ACCESSORY:6 IN X 9 IN W/ZIPPER	05006	ZIP-6X9ID
-3	----- -----	B200000	B200631	2	PROBE,VOLTAGE:P6062B,72.0 L,W/ACCESSORIES		
	----- -----	B200632		2	PROBE,VOLTAGE:P6105A,10X,2 M,W/ACCESS		
-4	337-1674-01			1	SHLD,IMPLOSION:4.295 X 4.92,CLEAR	80009	337-1674-01
-5	134-0016-01			1	ADAPTER,CONN:BANANA W/BINDING POST	80009	134-0016-01
	003-0120-00			1	LEAD,TEST:ONE PAIR	80009	003-0120-00
-6	159-0016-00			2	FUSE,CARTRIDGE:3AG,1.5,250V,FAST BLOW (FOR 115V OPERATION)	71400	AGC-CW-1 1/2
	159-0042-00			2	FUSE,CARTRIDGE:3AG,0.75A,250V,0.15SEC (FOR 230V OPERATION)	75915	312.750
	016-0592-00			1	VISOR,CRT:	TK2165	ORDER BY DESCR
	070-2037-00			1	MANUAL,TECH:OPERATORS	80009	070-2037-00
	070-4796-00			1	MANUAL,TECH:SERVICE,466	80009	070-4796-00
					OPTIONAL ACCESSORIES		
	016-0365-00			1	COVER,PROT:	80009	016-0365-00
	016-0566-00			1	VISOR,CRT:	TK2165	ORDER BY DESCR
	016-0180-00			1	VISOR,CRT:FOLDING	TK2165	ORDER BY DESCR
	016-0676-00			1	RACK MT CONV AS: (NOT FOR USE WITH DM44)	80009	016-0676-00
	378-0726-01			1	FILTER,MESH:EMI W/FRAME	80009	378-0726-01

http://manoman.sghill.com