Tektronix®
COMMITTED TO EXCELLENCE

WARNING

THE FOLLOWING SERVICING INSTRUCTIONS ARE FOR USE BY QUALIFIED PERSONNEL ONLY. TO AVOID PERSONAL INJURY, DO NOT PERFORM ANY SERVICING OTHER THAN THAT CONTAINED IN OPERATING INSTRUCTIONS UNLESS YOU ARE QUALIFIED TO DO SO.

PLEASE CHECK FOR CHANGE INFORMATION AT THE REAR OF THIS MANUAL.

7854
OSCILLOSCOPE
WITH OPTIONS
SERVICE

INSTRUCTION MANUAL

Tektronix, Inc.
P.O. Box 500
Beaverton, Oregon 97077

070-2874-01

Serial Number _____

First Printing APR 1980
Revised SEP 1981

http://manoman.sqhill.com

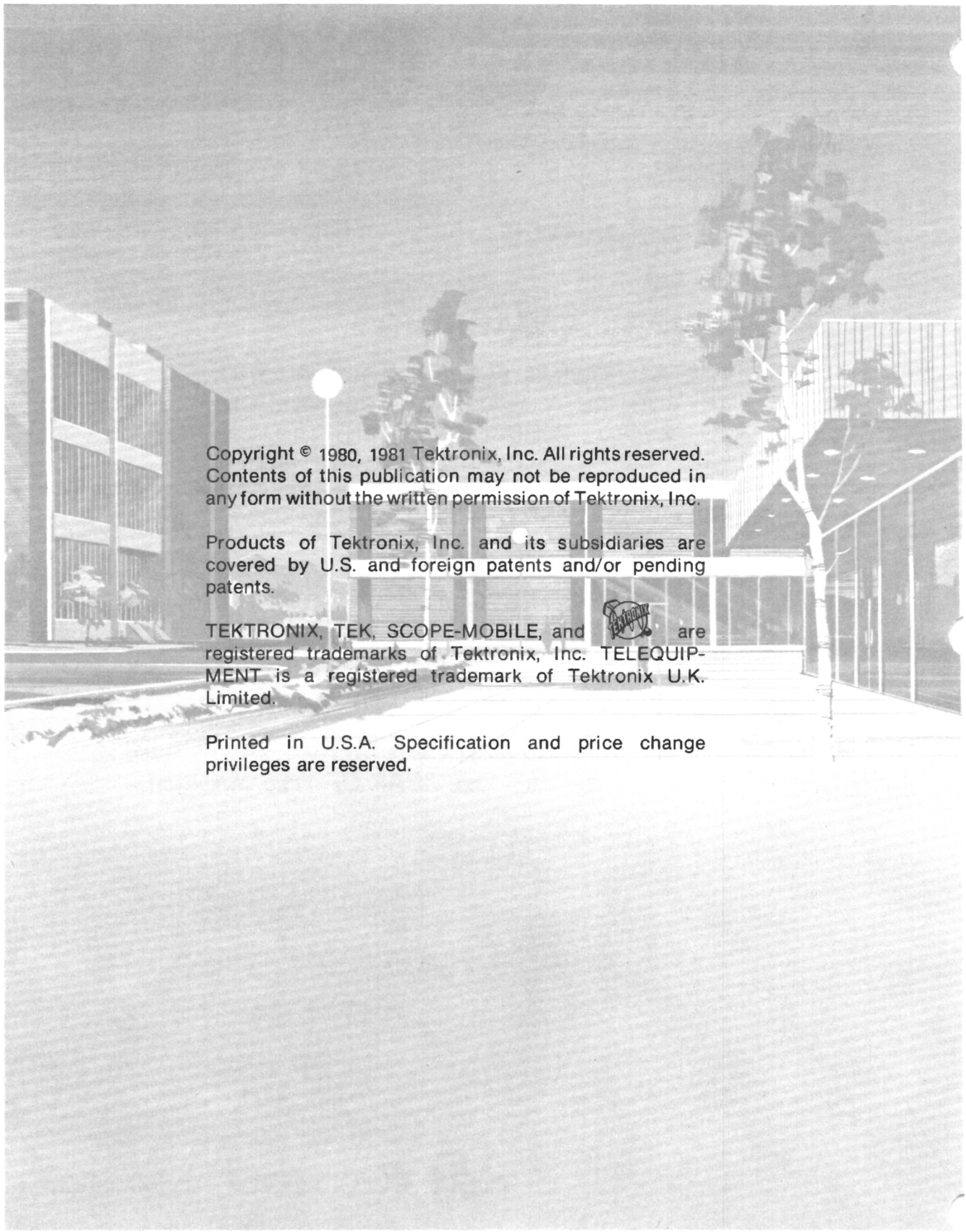

Copyright © 1980, 1981 Tektronix, Inc. All rights reserved. Contents of this publication may not be reproduced in any form without the written permission of Tektronix, Inc.

Products of Tektronix, Inc. and its subsidiaries are covered by U.S. and foreign patents and/or pending patents.

TEKTRONIX, TEK, SCOPE-MOBILE, and are registered trademarks of Tektronix, Inc. TELEQUIPMENT is a registered trademark of Tektronix U.K. Limited.

Printed in U.S.A. Specification and price change privileges are reserved.

http://manoman.sqhill.com

TABLE OF CONTENTS

PAGE

LIST OF ILLUSTRATIONS iv
LIST OF TABLES v
SERVICING SAFETY SUMMARY vi

SECTION 1—GENERAL INFORMATION

SERVICE MANUAL 1-1
7854 RELATED DOCUMENTATION 1-1
INSTALLATION 1-2
INITIAL INSPECTION 1-2
POWER SOURCE INFORMATION 1-2
POWER-UP CONDITIONS 1-3
PRESET CONDITIONS 1-4
OPERATING POSITION 1-4
OPERATING TEMPERATURE 1-4
TEKTRONIX FIELD SERVICE 1-4
PACKAGING FOR SHIPMENT 1-4

SECTION 2—THEORY OF OPERATION

BLOCK DIAGRAM 2-1
DESCRIPTION 2-1
DETAILED CIRCUIT OPERATION 2-5
TEKTRONIX DRAFTING CONVENTION 2-5
CABLING 2-5
MODE SWITCH AND CALIBRATOR 2-5
MODE SWITCH 2-5
CALIBRATOR 2-8
MAIN INTERFACE 2-8
PLUG-IN INTERFACE 2-8
VERTICAL CHANNEL SELECT LOGIC 2-8
HORIZONTAL CHANNEL SELECT LOGIC 2-11
MAINFRAME LOGIC 2-11
HORIZONTAL LOGIC 2-12
Z-AXIS LOGIC 2-15
HORIZONTAL BINARY 2-17
VERTICAL BINARY 2-19
PLUG-IN BINARY 2-21
CLOCK GENERATOR 2-23
VERTICAL CHOPPED BLANKING 2-25
CHOP COUNTER 2-26
VERTICAL MODE LOGIC 2-28
TRACE SEPARATION 2-29
A TRIGGER SELECTOR 2-30
A TRIGGER CHANNEL SWITCH 2-30
LEFT AND RIGHT TRIGGER PREAMPLIFIERS 2-31
A TRIGGER OUTPUT AMPLIFIER 2-31
VERTICAL SIGNAL OUT AMPLIFIER 2-32
B TRIGGER SELECTOR 2-32
B TRIGGER CHANNEL SWITCH 2-33
LEFT AND RIGHT TRIGGER PREAMPLIFIERS 2-33
B TRIGGER OUTPUT AMPLIFIER 2-34
VERTICAL CHANNEL SWITCH 2-34
CHANNEL SWITCH 2-36
OUTPUT VOLTAGE REGULATORS 2-36
VERTICAL CHANNEL SELECTOR 2-37
RIGHT AND LEFT CHANNEL FEEDBESIDE 2-37
SECONDARY SUPPLY REGULATORS 2-37
VERTICAL PICKOFF AMPLIFIER 2-38
PICKOFF AMPLIFIER 2-38
VOLTAGE/CURRENT REGULATOR 2-38

PAGE

VERTICAL AMPLIFIER 2-38
DELAY LINE 2-38
AUXILIARY INPUT AMPLIFIER 2-39
HIGH-FREQUENCY AMPLIFIER 2-39
OUTPUT AMPLIFIER 2-39
OUTPUT PROTECTION 2-40
BEAM FINDER/BEAM FINDER OVERRIDE 2-40
HORIZONTAL CHANNEL SWITCH AND PICKOFF AMPLIFIER 2-40
HORIZONTAL CHANNEL SWITCH 2-40
PICKOFF AMPLIFIER 2-40
X-Y DELAY COMPENSATION (OPTION 02) 2-41
HORIZONTAL AMPLIFIER 2-41
INPUT AMPLIFIER/BEAMFINDER 2-41
DRIVER AMPLIFIERS AND ACTIVE PEAKING 2-42
OUTPUT AMPLIFIERS 2-42
OUTPUT SIGNALS 2-42
SAWTOOTH AMPLIFIER 2-42
GATE AMPLIFIER 2-43
SINGLE SWEEP RESET 2-43
Z-AXIS AND FOCUS AMPLIFIER 2-43
Z-AXIS AMPLIFIER 2-43
AUTO-FOCUS CHANNEL SWITCH AND AMPLIFIER 2-44
HIGH VOLTAGE POWER SUPPLY AND CRT 2-44
POWER TRANSFORMER 2-44
+130 V SUPPLY 2-44
CRT HEATER 2-44
ANODE VOLTAGE MULTIPLIER 2-44
CRT CATHODE SUPPLY 2-45
CATHODE SUPPLY REGULATOR 2-45
CONTROL-GRID DC RESTORER 2-45
FOCUS-GRID DC RESTORER 2-45
CRT CONTROL 2-45
CONVERTER/RECTIFIERS 2-46
LINE INPUT 2-46
INVERTER START 2-47
INVERTER 2-47
OVER-VOLTAGE STOP 2-49
INVERTER CONTROL 2-49
POWER UP LOGIC 2-50
LOW-VOLTAGE RECTIFIERS 2-50
LOW-VOLTAGE REGULATORS AND FAN BOARD 2-50
OPERATIONAL AMPLIFIER POWER SUPPLIES 2-51
+50 V REGULATOR 2-51
-15 V REGULATOR 2-51
+5 V REGULATOR 2-53
+15 V REGULATOR 2-53
-50 V REGULATOR 2-53
FAN CIRCUIT 2-53
GRATICULE LIGHT SUPPLY 2-53
FRONT-PANEL CONTROLS 2-53
KEYBOARD SYSTEM 2-54
CLOCK DIVIDER 2-54
KEYBOARD SCANNER 2-54
DATA BUS BUFFER 2-57
KEYBOARD STOP/SCAN 2-57
KEYBOARD FLAGS 2-57
KEYBOARDS 2-57

http://manoman.sqhill.com

TABLE OF CONTENTS (CONT)

PAGE

COLUMN SCANNER 2-58
ROW SCANNER 2-58
LED DRIVERS 2-58
VERTICAL AND HORIZONTAL SAMPLER 2-58
SAMPLING BRIDGE 2-58
STROBE INPUT 2-59
VERTICAL AND HORIZONTAL STROBE 2-59
VOLTAGE FOLLOWERS 2-59
CHANNEL SWITCH 2-59
DECOUPLING FILTERS 2-60
DIGITIZER CONTROL LOGIC 2-60
DATA/CLOCK SELECT 2-60
BUS CONTROL 2-61
ADDRESS SELECT 2-62
INTERNAL ACQUIRE ADDRESS GENERATOR .. 2-63
ADDRESS GENERATOR 2-63
COUNTER 2-63
MODE WORD LATCH 2-63
A WORD BUFFER 2-63
END-OF-COUNT DETECTOR 2-63
WORD/CLOCK SELECT 2-64
B WORD ADDRESS COUNTER 2-64
ADDRESS OUTPUT 2-64
DIGITIZER CLOCK 2-65
CLOCK/SOURCE SELECT 2-65
CLOCK DELAY 2-66
SOURCE RESTART 2-66
GATED OSCILLATOR 2-66
BURST COUNTER 2-67
DMA CONTROL 2-67
BUS REQUEST LOGIC 2-68
BUS GRANT LOGIC 2-68
DMA TIMING LOGIC 2-68
DIGITIZER SWEEP COUNTER 2-69
ACQUIRE WORD REGISTER 2-70
SWEEP COUNTER 2-70
GATE SELECT 2-70
COMPLETE SWEEP DETECTOR 2-70
ACQUIRE STOP 2-70
DIGITIZER 2-71
COMPARATOR 2-71
APPROXIMATION GENERATOR 2-71
D/A CONVERTER 2-72
APPROXIMATION DATA LATCH 2-72
VOLTAGE REFERENCE 2-74
CLOCK CONDITIONER 2-74
SIGNATURE ANALYSIS 2-74
MICROPROCESSOR AND CONTROL 2-75
CLOCK 2-75
INTERRUPTS AND CONTROL 2-76
DATA BUS TRANSCEIVERS 2-76
TRANSCEIVER CONTROL 2-77
CONTROL BUS 2-77
CRU OUTPUTS 2-77
ADDRESS DECODER 2-78
ADDRESS BUFFERS 2-78
READ ONLY MEMORY 2-78
ADDRESS BUS BUFFER 2-78
MEMORY 2-78
ROM CONTROL 2-79
FPLA 2-80

PAGE

DATA BUS BUFFER 2-80
RANDOM ACCESS MEMORY 2-80
MEMORY 2-80
ADDRESS BUFFERS 2-80
RAM CONTROL 2-80
INPUT/OUTPUT DATA BUFFERS 2-81
MEMORY BACK-UP POWER SWITCH 2-81
WRITE PROTECT 2-81
READOUT ACQUIRE 2-81
TIMER 2-86
TIME-SLOT COUNTER 2-86
CHANNEL COUNTER 2-87
COLUMN AND ROW DATA SWITCHES 2-90
COLUMN AND ROW DECODERS 2-91
CHARACTER ENCODERS 2-91
POSITION ADDRESS COUNTER 2-91
BUFFERS 2-92
READOUT BUS CONTROL 2-92
VERTICAL/HORIZONTAL DISPLAY AND CONTROL 2-92
BLOCK DESCRIPTION 2-93
DISPLAY D/A AND AMPLIFIER 2-109
HORIZONTAL AND VERTICAL D/A CONVERTER 2-109
HORIZONTAL CURRENT SUMMER AND AMPLIFIER 2-109
VERTICAL CURRENT SUMMER AND AMPLIFIER 2-111
VERTICAL AND HORIZONTAL VECTOR GENERATOR 2-111
OUTPUT SELECTOR 2-113
Z-AXIS DRIVE 2-113
ANALOG SCOPE CONTROL LOGIC 2-113
GPIB 2-113
THE IEEE 488-1978 STANDARD 2-114
THE HANDSHAKE PROCESS 2-114
GPIA 2-117
MPU INTERFACE 2-117
GPIB INTERFACE 2-117
CONTROL AND TIMING LOGIC 2-117
GPIB ADDRESS SELECTOR 2-120
REAR PANEL CONNECTOR 2-120
MOTHER BOARD 2-120
AUXILIARY REGULATOR 2-124
+12 VOLT REGULATOR 2-124
+5 VOLT REGULATOR 2-124
-5 VOLT SWITCHING 2-124
EXCESSIVE CURRENT STOP 2-125
FAULT PROTECTION 2-125

SECTION 3—MAINTENANCE
PREVENTATIVE MAINTENANCE 3-1
CABINET PANEL REMOVAL 3-1
CLEANING 3-1
EXTERIOR 3-1
CRT 3-1
INTERIOR 3-2
VISUAL INSPECTION 3-2
SEMICONDUCTOR CHECKS 3-2
PERIODIC ELECTRICAL ADJUSTMENT 3-2

http://manoman.sqhill.com

TABLE OF CONTENTS (CONT)

PAGE

TROUBLESHOOTING 3-2
TROUBLESHOOTING AIDS 3-2
DIAGRAMS 3-2
CIRCUIT BOARD ILLUSTRATIONS 3-3
SERVICE IDENTIFICATION TAG 3-3
TROUBLESHOOTING CHART 3-3
TROUBLESHOOOTING TREE 3-3
ADJUSTMENT AND TEST POINT LOCATIONS .. 3-3
COMPONENT COLOR CODING 3-3
SEMICONDUCTOR LEAD CONFIGURATIONS 3-3
MULTI-PIN CONNECTORS 3-3
ANALOG TROUBLESHOOTING EQUIPMENT 3-3
DIGITAL TROUBLESHOOTING EQUIPMENT 3-7
DIGITAL TROUBLESHOOTING TECHNIQUES 3-9
PRESET CONDITIONS 3-10
ANALOG TROUBLESHOOTING TECHNIQUES 3-10
1. CHECK CONTROL SETTINGS 3-10
2. CHECK ASSOCIATED EQUIPMENT 3-10
3. VISUAL CHECK 3-10
4. CHECK INSTRUMENT ADJUSTMENT 3-10
5. ISOLATE TROUBLE TO A CIRCUIT 3-10
6. CHECK VOLTAGES AND WAVEFORMS 3-10
7. CHECK INDIVIDUAL COMPONENTS 3-11
8. REPAIR AND ADJUST THE CIRCUIT 3-11
TROUBLESHOOTING THE HIGH-EFFICIENCY POWER-SUPPLY UNIT 3-11
GENERAL 3-11
PRELIMINARY PROCEDURE 3-12
TROUBLESHOOTING PROCEDURE 3-12
CORRECTIVE MAINTENANCE 3-16
OBTAINING REPLACEMENT PARTS 3-16
SOLDERING TECHNIQUES 3-17
COMPONENT REMOVAL AND REPLACEMENT 3-18
DISPLAY UNIT KICKSTAND 3-18
POWER-SUPPLY UNIT REMOVAL 3-18
POWER-SUPPLY UNIT INSTALLATION 3-18
CATHODE-RAY TUBE REMOVAL 3-20
CATHODE-RAY TUBE REPLACEMENT 3-21
CIRCUIT BOARDS 3-21
PLUG-IN INTERFACE CONNECTORS 3-27
SEMICONDUCTORS 3-27
INTERCONNECTING PINS 3-32
PUSHBUTTON SWITCHES 3-33
GRATICULE LIGHT BULBS 3-33
POWER TRANSFORMER 3-33
ADJUSTMENT AFTER REPAIR 3-33

SECTION 4—CALIBRATION
USING THESE PROCEDURES 4-2
PERFORMANCE CHECK SUMMARY 4-2
ADJUSTMENT INTERVAL 4-17
TEKTRONIX FIELD SERVICE 4-17
TEST EQUIPMENT REQUIRED 4-17
SPECIAL FIXTURES 4-17
TEST EQUIPMENT ALTERNATIVES 4-17

PAGE

PART I—PERFORMANCE CHECK 4-21
INDEX TO PERFORMANCE CHECK PROCEDURE .. 4-21
PERFORMANCE CHECK POWER-UP SEQUENCE .. 4-21
A. Z-AXIS AND DISPLAY 4-22
B. CALIBRATOR AND OUTPUT SIGNALS 4-23
C. TRIGGER SYSTEM 4-29
D. HORIZONTAL SYSTEM 4-31
E. VERTICAL SYSTEM 4-34
F. VERTICAL AND HORIZONTAL PICKOFF SYSTEM 4-37
PART II—ADJUSTMENT AND PERFORMANCE CHECK 4-42
INDEX TO ADJUSTMENT AND PERFORMANCE CHECK PROCEDURE 4-42
ADJUSTMENT AND PERFORMANCE CHECK POWER-UP SEQUENCE 4-43
A. POWER SUPPLY 4-44
B. Z-AXIS AND DISPLAY 4-47
C. CALIBRATOR AND OUTPUT SIGNALS 4-54
D. TRIGGER SYSTEM 4-60
F. VERTICAL SYSTEM 4-71
GA. DISPLAY SYSTEM 4-79
GB. DISPLAY SYSTEM 4-83
GC. DISPLAY SYSTEM 4-87
H. VERTICAL AND HORIZONTAL PICKOFF SYSTEM 4-90
I. CALCULATOR KEYBOARD 4-104

SECTION 5—INSTRUMENT OPTIONS
OPTION 02 5-1
OPTION 03 5-1
OPTION 78 5-1
OPTION 0D 5-1
OPTION 2D 5-1
OPTION 1S 5-1
OPTION 2S 5-1
POWER CORD OPTIONS 5-2
WHICH OPTIONS DOES YOUR 7854 HAVE? ... 5-5

SECTION 6—REPLACEABLE ELECTRICAL PARTS

SECTION 7—DIAGRAMS AND CIRCUIT BOARD ILLUSTRATIONS

SECTION 8—REPLACEABLE MECHANICAL PARTS

CHANGE INFORMATION

http://manoman.sqhill.com

LIST OF ILLUSTRATIONS

Figure No.		Page
2-1	Block Diagram	2-2
2-2	Mode Switch/Calibrator block diagram	2-7
2-3	(A) Logic Diagram of the Vertical Channel Switch Logic on the Main Interface. (B) Input/output table of the Vertical Channel Switch logic on the Main Interface	2-9
2-4	Detailed block diagram of the Mainframe Logic circuit	2-10
2-5	Breakdown of separate stages within Horizontal Logic IC (U116) showing inputs and output for each stage	2-11
2-6	(A) Logic diagram for A Sweep Lockout stage; (B) Table of input/output combinations	2-12
2-7	(A) Logic diagram for B Sweep Lockout stage; (B) Table of input/output combinations	2-13
2-8	(A) Logic diagram for Alternate Pulse Generator stage; (B) Table of input/output combinations	2-14
2-9	Input and output pins for Z-Axis Logic IC (U190)	2-15
2-10	(A) Logic diagram for Z-Axis Logic stage; (B) Table of input/output combinations	2-16
2-11	Input and output pins for Horizontal Binary IC (U4358)	2-17
2-12	(A) Logic diagram for Horizontal Binary stage; (B) Table of input/output combinations	2-18
2-13	Input and output pins for Vertical Binary IC (U52)	2-19
2-14	(A) Logic diagram for Vertical Binary stage; (B) Table of input/output combinations	2-20
2-15	Input and output pins for the plug-in binary IC (U82)	2-21
2-16	(A) Logic diagram for Plug-in Binary stage; (B) Input/output tables for U72 and entire stage	2-22
2-17	(A) Diagram of clock generator stage; (B) Idealized waveform for clock	2-24
2-18	(A) Logic diagram for Vertical Chopped Blanking stage; (B) Table of input/output combinations	2-25
2-19	Idealized waveforms for Vertical Chopped Blanking stage	2-26
2-20	(A) Input and output pins for Chop counter IC (U22); (B) Idealized waveforms for Chop Counter stage	2-27
2-21	Logic diagram of Chop Counter stage	2-28
2-22	Logic diagram of Vertical Mode Logic stage	2-29
2-23	(A) Logic diagram of Trace Separation stage; (B) Table of input/output combinations	2-30
2-24	Detailed block diagram of the A Trigger Selector circuit	2-31
2-25	Detailed block diagram of the B Trigger Selector circuit	2-33
2-26	Vertical Amplifier detailed block diagram	2-35
2-27	(A) Functional diagram of Vertical Channel Switch; (B) Table showing signal distribution by the Vertical Channel Switch	2-36
2-28	U150 internal circuitry representation	2-39
2-29	Input/output relationships for the Auto-Focus Channel Switch	2-44
2-30	Detailed block diagram of the Converter/Rectifiers circuit	2-46
2-31	(A) Representation of Inverter stage. Idealized waveforms of (B) total Inverter current, IC, (C) Voltage across CR41 and (D) Voltage across primaries of T10 and T35	2-48
2-32	Detailed Block Diagram of the Converter/Rectifiers circuit	2-52
2-33	Detailed Block Diagram of the Keyboard system	2-55
2-34	Timing Diagram for the Keyboard System	2-56
2-35	Comparison sequence of Successive Approximation Register for two random voltage samples	2-73
2-36	Clock Pulse delay	2-74
2-37	Timing relationships of the four phase, 3-MHz clock	2-75
2-38	Location of Readout words on the crt identifying the originating plug-in and channel	2-82
2-39	Character Selection Matrix for the 7854 Readout Acquire system	2-83
2-40	Typical readout display where only channel 2 of the Right Vertical and B Horizontal units is displayed	2-84
2-41	Detailed Block Diagram of the Readout Acquire system	2-85
2-42	Output waveforms of Timer stage	2-86
2-43	Time relationship of the Time Slot (TS) pulses produced by U2320	2-87
2-44	Typical encoding scheme for Voltage-Sensing plug-in unit. Coding shown for a calibrated deflection factor of 100 microvolts (inverted)	2-89
2-45	Idealized current waveforms of: (A) Row Analog data. (B) Column Analog data	2-90
2-46A	Waveform Data Flow	2-94
2-46B	Character Data Flow	2-96
2-47	7854 Character Set	2-100
2-48	Crt Display	2-110
2-49	Display of Character on crt	2-112
2-50	GPIB Three Wire Handshake state diagram	2-115
2-51	GPIB Handshake flowchart	2-116
2-52	GPIB timing diagram	2-119
3-1	Color code for resistors and capacitors	3-4
3-2	Semiconductor lead configurations	3-5
3-3	Orientation of multi-pin connector holders	3-6
3-4	Analog Test Board (067-0912-00) interconnections	3-7
3-5	Typical digital test/troubleshooting configurations	3-8
3-6	Current sensing waveform at R84	3-13
3-7	Location of screws used for discharging line storage capacitors	3-14
3-8	Current waveform of T30 showing burst operation at line voltage of about 60 volts	3-15
3-9	Current waveform at T30 for normal inverter operation at line voltage of 115 volts	3-16

http://manoman.sqhill.com

LIST OF ILLUSTRATIONS (CONT)

Figure No.		Page
3-10	Waveform at TP34 on the A23-Inverter board with the line voltage at about 20 volts	3-16
3-11	Recommended desoldering sequence for multi-pin devices	3-17
3-12	Use of the Display Unit kickstand	3-19
3-13	Power Supply Unit securing screws and service identification tag location	3-20
3-14	Location of securing screws used for A11-Main Interface board removal	3-23
3-15	Correct placement of power transistor and mounting hardware in rear heatsink	3-25
3-16	IC code number locations	3-28
3-17	Hypcon assembly removal and replacement	3-30
3-18	Coaxial end-lead connector assembly	3-32
3-19	Exploded view of circuit board pin and ferrule	3-32
3-20	Correct procedure for pushbutton switch removal and replacement	3-34
4-1	Typical display when checking X-Y Phase relationships	4-33
4-2	Typical display when checking X-Y Phase relationships	4-69
5-1	Location of Option identification tags	5-5

LIST OF TABLES

Table No.		Page
1-1	Power-Cord Color Conductor Identification	1-2
1-2	Power-Cord And Plug Identification Information	1-3
1-3	Self-Test Fault Codes	1-4
2-1	Common Logic Gates Illustrations	2-6
2-2	Inputu/Output Combinations for A Trigger Channel Switch	2-32
2-3	Input/Output Combinations for B Trigger Channel Switch	2-34
2-4	ROM ENABLING	2-79
2-5	Standard Readout Format	2-84
2-6	Channel Address Code	2-88
2-7	Signal Line Description Table	2-101
2-8	Mother Board Signal Definitions	2-121
3-1	Self-Test Fault Codes	3-9
3-2	Recommended Power Supply Troubleshooting Sequence	3-12
3-3	Typical Power-Supply Resistance	3-13
3-4	Burst Voltage Test Points	3-14
3-5	IC Code/Shunt Resistor Replacement Values	3-28
4-1	Calibratation Procedure Electives	4-1
4-2	Performance Check Summary	4-2
4-3	Test Equipment	4-17
5-1	Option Information Locator	5-2

http://manoman.sqhill.com

SAFETY SUMMARY

The general safety information contained in this summary is for servicing personnel. Specific warnings and cautions will be found throughout the manual where they apply and should be followed in each instance.

TERMS

IN THIS MANUAL

CAUTION statements identify conditions or practices that could result in damage to the equipment or other property.

WARNING statements identify conditions or practices that could result in personal injury or loss of life.

AS MARKED ON EQUIPMENT

CAUTION indicates a personal injury hazard not immediately accessible as one reads the marking, or a hazard to property including the equipment itself.

DANGER indicates a personal injury hazard immediately accessible as one reads the marking.

SYMBOLS

IN THIS MANUAL


Static-Sensitive Devices.


This symbol indicates where applicable cautionary or other information is to be found.

AS MARKED ON EQUIPMENT


DANGER—High voltage.


Protective ground (earth) terminal.


ATTENTION—refer to manual.

WARNINGS

POWER SOURCE

This product is intended to operate from a power source that will not apply more than 250 volts rms between the supply conductors or between either supply conductor and ground. A protective ground connection by way of the grounding conductor in the power cord is essential for safe operation.

USE THE PROPER POWER CORD

Use only the power cord and connector specified for your instrument. Use only a power cord that is in good condition.

For detailed information on power cords, see page 1-3.

http://manoman.sqhill.com

GROUNDING THE INSTRUMENT

This product is grounded through the grounding conductor of the power cord. To avoid electrical shock, plug the power cord into a properly wired receptacle before connecting to the input or output terminals of the instrument. A protective ground connection by way of the grounding conductor in the power cord is essential for safe operation.

DANGER ARISING FROM LOSS OF GROUND

Upon loss of the protective-ground connection, all accessible conductive parts (including knobs and controls that may appear to be insulating), can render an electric shock.

USE THE PROPER FUSE

To avoid fire hazard, use only the fuse specified in the parts list for your product, and which is identical in type, voltage rating, and current rating.

DO NOT OPERATE IN EXPLOSIVE ATMOSPHERES

To avoid explosion, do not operate this product in an atmosphere of explosive gases unless it has been specifically certified for such operation.

DO NOT SERVICE ALONE

Do not perform internal service or adjustment of this product unless another person capable of rendering first aid and resuscitation is present.

USE CARE WHEN SERVICING

Dangerous voltages exist at several points in this instrument when power is applied. Furthermore, dangerous potentials may be present in the power supply and crt circuits for quite some time after the power has been turned off. To avoid personal injury, do not touch exposed connections and components while power is on and, when servicing power-supply and crt circuits, until the power-supply and crt are properly discharged.

Disconnect power before removing protective panels, soldering or replacing components.

CRT HANDLING

Use care when handling a crt. Breakage of the crt causes a high-velocity scattering of glass fragments (implosion). Protective clothing and safety glasses should be worn. Avoid striking the crt on any object which might cause it to crack or implode. When storing a crt, place it in a protective carton or set it face down in a protected location on a smooth surface with a soft mat under the faceplate.

SILICONE GREASE HANDLING

Handle silicone grease with care. Avoid getting the silicone grease in your eyes. Wash hands thoroughly after use.

http://manoman.sqhill.com

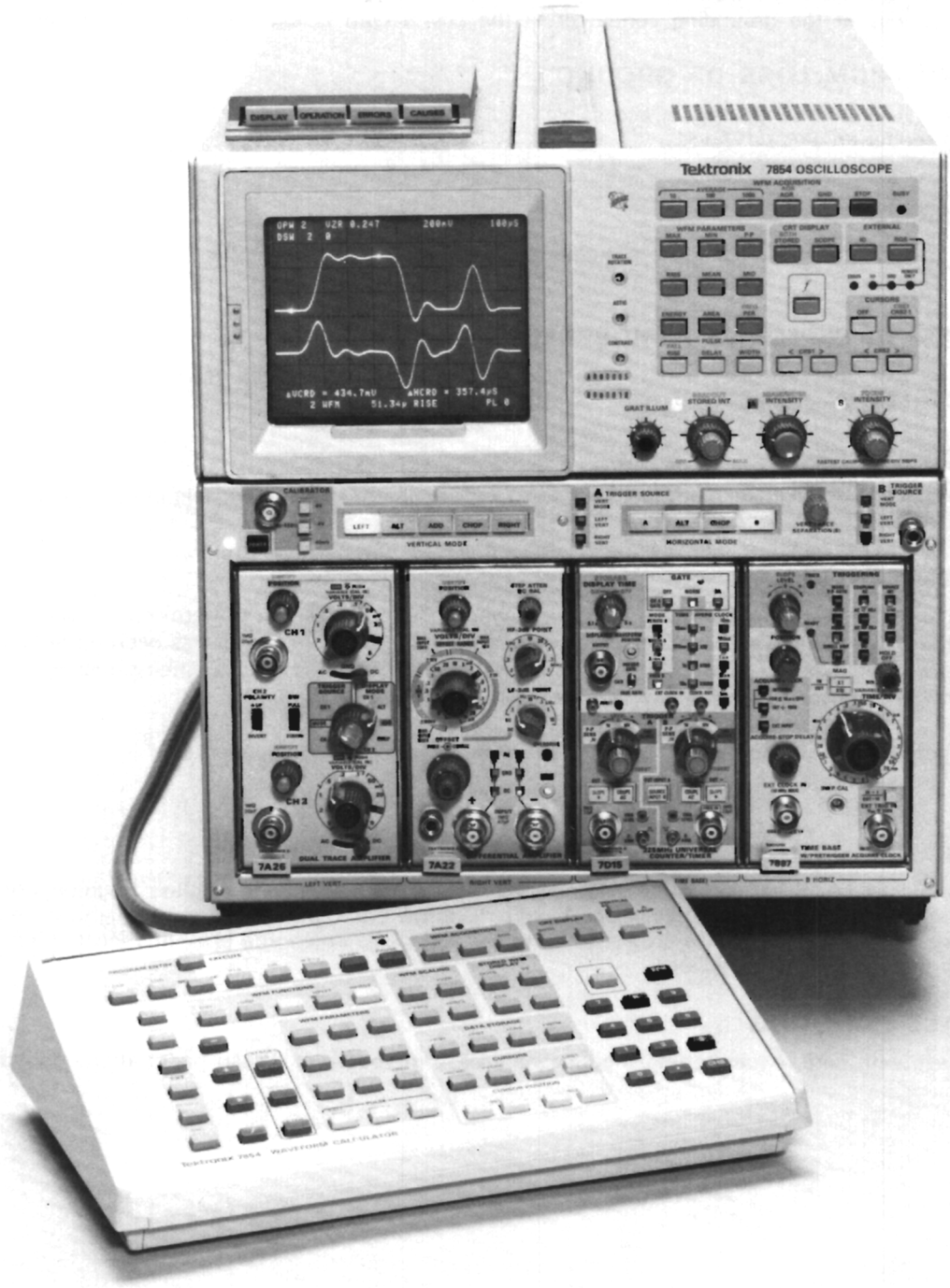

2874-104

7854 FEATURES

The TEKTRONIX 7854 Oscilloscope with Waveform Calculator combines the features of a high-performance plug-in oscilloscope with a waveform-oriented dedicated-function digital processor.

The waveform processor provides equivalent-time sampled digitizing of waveforms to 4ØØ megahertz equivalent-time bandwidth. The processor can be operated from either keyboard (front-panel measurement keyboard or detachable Waveform Calculator keyboard) or remotely over the GPIB (General Purpose Interface Bus).

Programming, consisting of a series of commands stored for later execution, is available to simplify measurements which must be repeated. Editing and execution is controlled either from the Waveform Calculator or the GPIB.

http://manoman.sqhill.com

GENERAL INFORMATION

This section contains a basic description of the Service Manual content, information on instrument installation, power and power cord requirements, operating temperature considerations, packaging for shipment, and instrument repair services.

SERVICE MANUAL

The following is a brief description of the information contained in this manual.

WARNING

THE SERVICE MANUAL CONTAINS INSTRUCTIONS FOR USE BY QUALIFIED SERVICE PERSONNEL ONLY. TO AVOID PERSONAL INJURY, DO NOT PERFORM ANY SERVICING UNLESS YOU ARE QUALIFIED TO DO SO.

Section 1—General Information contains installation instructions, operating temperature considerations, Tektronix Field Service, and instrument packaging information.

Section 2—Theory of Operation contains a basic block diagram description and a detailed circuit analysis that may be useful for servicing or operating the instrument.

Section 3—Maintenance describes routine and corrective maintenance procedures with detailed instructions for troubleshooting the analog circuits. Diagnostic troubleshooting equipment and procedures can be purchased separately, or refer repair to your Tektronix Field Office.

Section 4—Calibration contains procedures to check the operational performance and electrical characteristics of the instrument. A performance check summary provides a cross reference between the specifications and related adjustment procedures.

Section 5—Instrument Options contains a description of available options and locations of incorporated information for these options.

Section 6—Replaceable Electrical Parts contains information necessary to order replaceable parts and assemblies related to the electrical functions of the instrument.

Section 7—Diagrams and Circuit Board Illustrations includes detailed circuit schematics, locations of assembled boards within the instrument, voltage and waveform information, circuit board component locators, and locations of adjustments to aid in the performance of the Adjustment and Performance check portion of the Calibration procedure.

Section 8—Replaceable Mechanical Parts includes information necessary to order replaceable mechanical parts and shows exploded drawings which identify assemblies.

7854 RELATED DOCUMENTATION

In addition to the 7854 Service Manual, other publications are available; they include the Operators Manual, Diagnostic Manual Package and Data Sheets.

Operators Manual

The 7854 Operators manual contains installation instructions, specifications and operating information for the scope display, measurement and waveform calculator keyboard, GPIB, options and command language.

Diagnostic Manual Package

The information necessary for troubleshooting the digital portion of the 7854 Oscilloscope consists of several individually part numbered documents combined in an orderly fashion to produce a "Diagnostic Manual Package".

"7854 Diagnostic Troubleshooting Using 067-0911-XX Diagnostic Test Interface" is the principal manual and is bound in a 3-ring binder to enable insertion of the other support documents at their appropriate locations. Other support documents include supplement manuals and data sheets.

Supplement Manuals. The supplementary manuals "7854 Signature Analysis Tables Using 067-0911-XX Diagnostic Test Interface" (Part number 070-2922-XX) and "Test Procedures for 7854 Diagnostic Troubleshooting Using 067-0911-XX Diagnostic Test Interface" (Part number 070-2875-XX) should be inserted behind the Primary Manual's "Signature Tables" and "Test Procedures" tabs respectively.

http://manoman.sghill.com

The manual for the "Diagnostic Memory Board (067-0961-XX)" contains service information for the special circuit board containing the diagnostic firmware for troubleshooting the 7854.

Data Sheets (For Support-Related Test Fixtures). Data sheets for diagnostic related hardware include the following:

7854 Analog Test Board (067-0912-00)—See application under Analog Troubleshooting Equipment in Section 3, Maintenance.

7854 Extender Board, 44-Pin (067-0913-00)—See application under Digital Troubleshooting Equipment in Section 3, Maintenance.

7854 Extender Board, 80-Pin (067-0914-00)—See application under Digital Troubleshooting Equipment in Section 3, Maintenance.

7854 Extender Board, 124-Pin (067-0915-00)—See application under Digital Troubleshooting Equipment in Section 3, Maintenance.

INSTALLATION

INITIAL INSPECTION

This instrument was inspected both mechanically and electrically before shipment from the factory to be free of mars or scratches and to meet or exceed all electrical specifications. Upon receipt, inspect the instrument for any physical damage which may have been incurred in transit. Then, refer to the Performance Check Procedure in the Calibration section of this Manual to verify the electrical performance of the instrument. If mechanical damage or performance deficiencies are found, contact your local Tektronix Field Office or representative.

POWER SOURCE INFORMATION

This instrument will operate from either a 115-volt or 230-volt nominal line-voltage source, 48 to 440 hertz.

Operating Voltage

The LINE VOLTAGE SELECTOR switch (located on the rear panel of the 7854 Oscilloscope mainframe) allows selection of 115-volt or 230-volt nominal line voltage operation. To select the correct nominal line voltage, first change the power cord and plug to match the power-source receptacle (if necessary). Then, use a small screwdriver to move the LINE VOLTAGE SELECTOR switch to the desired range.

CAUTION

To prevent damage to the instrument, always check the settings of the LINE VOLTAGE SELECTOR switch located on the rear panel of the 7854 Oscilloscope mainframe before connecting the instrument to the line-voltage source.

Power Cord Information

A power cord with the appropriate plug configuration is supplied with each instrument. For your convenience the color-coding of the power cord conductors is given in Table 1-1. Also, should you require a power-cord plug other than that supplied, refer to the Power-Cord and Plug Identification Table 1-2.

TABLE 1-1
Power-Cord Color Conductor Identification

Conductor	Color	Alternate Color
Ungrounded (Line)	Brown	Black
Grounded (Neutral)	Light Blue	White
Grounding (Protective Ground)	Green/Yellow	Green/Yellow

WARNING

This instrument operates from a single-phase power source, and has a detachable three-wire power cord with a two-pole, three-terminal grounding-type plug. The voltage to ground (earth) from either pole of the power source must not exceed the maximum rated operating voltage, 250 volts.

Before making connection to the power source, determine that the instrument is adjusted to match the voltge of the power source, and has a suitable plug (two-pole, three-terminal, grounding type).

This instrument is safety class 1 equipment (IEC designation). All accessible conductive parts are directly connected through the grounding conductor of the power cord to the grounding contact of the power cord. Therefore, the power plug must only be inserted in a mating receptacle with a grounding contact. Do not defeat the grounding connection. Any interruption of the grounding connection can create an electric shock hazard.*

For electric shock protection, the grounding connection must be made before making connection to the instrument's input or output terminals.

*International Electrotechnical Commission

http://manoman.sqhill.com

TABLE 1-2
Power-Cord And Plug Identification Information

Plug Configuration	Usage	Nominal Line-Voltage (AC)	Reference Standards	Option #
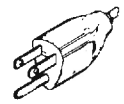	North American 120V/15A	115 V	[1]ANSI C73.11 [2]NEMA 5-15-P [3]IEC 83	STANDARD
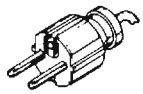	Universal Euro 250V/10-16A	230 V	[4]CEE (7), II, IV, VII [3]IEC 83	A1
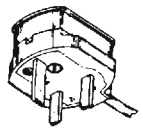	UK 240V/13A	230 V	[5]BS 1363 [3]IEC 83	A2
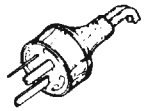	Australian 240V/10A	230 V	[6]AS C112	A3
	North American 240V/15A	230 V	[1]ANSI C73.20 [2]NEMA 6-15-P [3]IEC 83	A4

[1]ANSI—American National Standards Institute
[2]NEMA—National Electrical Manufacturer's Association
[3]IEC—International Electrotechnical Commission
[4]CEE—International Commission on Rules for the Approval of Electrical Equipment
[5]BS—British Standards Institution
[6]AS—Standards Association of Australia

Memory Back-up Power

Two female banana jacks (on the rear panel of the 7854 Oscilloscope mainframe) allow application of about 6.25 V dc (0.7 A maximum) to provide back-up power for the volatile storage devices used for processor memory. The instrument is fuse protected for application of any voltages applied to the MEMORY BACK-UP POWER INPUT up to +50 volts (dc plus peak ac). When power is first applied to the MEMORY BACK-UP POWER INPUT the associated red indicator lights to indicate that the fuse has not blown.

CAUTION

To prevent loss of data from memory due to a power failure, apply memory back-up power.

POWER-UP CONDITIONS

When the 7854 is turned on (without memory backup power applied), the digital processor runs four self-checking tests. Although these tests are not all-inclusive, they indicate if major portions of the processor are working properly. The self-test sequence outlined below begins when power is applied to the 7854.

Step 1: When power is applied the following indicators will light: POWER, selected positions of the A and B TRIGGER SOURCE switches, and all selected indicators on the plug-in units. For approximately three seconds after power-up the following indicators will remain off: all positions of the VERTICAL and HORIZONTAL MODE switches, all intensity indicators, all red front-panel (measurement keyboard) and Waveform Calculator indicators.

Step 2: All positions of the VERTICAL and HORIZONTAL MODE switches, all Intensity indicators, and all red-front-panel and Waveform Calculator indicators will now light.

Step 3: A fault condition found through any of the four tests is indicated with the lights of the VERTICAL and HORIZONTAL MODE switches. Fault condition codes are listed in Table 1-3. Be sure to note the code received so that you may more fully inform the service person about the trouble.

http://manoman.sqhill.com

If a fault code occurs, press any button of the VERTICAL or HORIZONTAL MODE switches and the self-testing will continue. Then, refer to the Performance Check Procedure in the Calibration section of this Manual to verify the electrical performance of the instrument.

Step 4: Successful completion of the self tests is indicated by the issuance of the audible warning tone (if the rear-panel AUDIBLE WARNING switch is ON), and the extinguishing of all red indicators, the S and A Intensity indicators, all VERTICAL MODE lights except LEFT, and all HORIZONTAL MODE switch lights except B. In addition, if the READOUT intensity control is set to about midrange, the message **SELF TEST COMPLETE** will be displayed on the crt.

TABLE 1-3
Self-Test Fault Codes

VERTICAL MODE Indicator Status	HORIZONTAL MODE Indicator Status	Circuitry With Fault
All lights on.	B light on.	RAM
All lights on.	CHOP light on.	ROM
All lights on.	CHOP and B lights on.	Real-time Clock
All lights on.	ALT light on.	Display

PRESET CONDITIONS

After successful completion of the processor self tests, several parameters of the 7854 are set to predetermined conditions. These power-up conditions are:

CRT DISPLAY mode ..... Set to SCOPE
Program Mode ..... Set to EXECUTE
Program Memory ..... Cleared
VERTICAL MODE ..... Set to LEFT
HORIZONTAL MODE ..... Set to B
Stored Waveform Display ..... Not displayed; set to VECTors
P/W (Points/Waveform) ..... Set to 512
Stack Registers ..... Cleared to 0
OPW (Operational Waveform) ..... Set to 0
All waveform memory points ..... Set to the zero value (center horizontal graticule line)
VZR (Vertical Zero Reference) ..... Set to 0 (all waveform memories)
Vertical Scale Factor ..... Set to 1 (all waveform memories)
Vertical Scale Factor Unit ..... Set to V (all waveform memories)
Horizontal Scale Factor ..... Set to 1 (all waveform memories)
Horizontal Scale Factor Unit ..... Set to S (all waveform memories)
Constant Registers ..... Set to 0
TTL Output ..... Set HIGH
RSV Control Flags ..... Set ON

OPERATING POSITION

A bail-type stand, mounted on the bottom of the mainframe, permits the instrument to be tilted up abou 10° for more convenient crt viewing.

OPERATING TEMPERATURE

The 7854 can be operated in ambient air temperatures between 0° and +50° C, and can be stored in ambient temperatures from -55° to +75° C. After being stored in temperatures outside the operating limits, allow the chassis temperature to return to within the operating limits before applying power.

The 7854 Oscilloscope mainframe is cooled by air drawn in through holes in the top, side, and bottom cabinet panels and blown out through the fan exhaust. To ensure proper instrument cooling, maintain the clearance provided by the feet on the bottom cabinet panel, and allow at least 2 inches of clearance at the top, sides, and rear of the instrument.

If the internal temperature of the mainframe exceeds a safe operating level, a thermal cutout will repeatedly interrupt the instrument power supply. This condition stops when the temperature returns to a safe level.

TEKTRONIX FIELD SERVICE

Tektronix Field Service Centers and the Factory Service Center provide instrument repair and adjustment services. Contact your Tektronix Field Office or representative for further information.

PACKAGING FOR SHIPMENT

If this instrument is to be shipped for long distances by commercial transportation, we recommend that the instrument be packaged in the original manner. The cartons and packaging material in which your instrument was shipped should be saved and used for this purpose.

http://manoman.sghill.com

Also, if this instrument is to be shipped to a Tektronix Service Center for service or repair, attach a tag to the instrument showing the following: Owner of the Instrument (with address), the name of a person at your firm who can be contacted, and the complete instrument type and serial number. Also, list the Diagnostic Firmware number, and the Signature Table number (indicated on the rear-panel SERVICE IDENTIFICATION tag). Provide a description of the service required.

If the original packaging is unfit for use or not available, package the instrument as follows:

1. Obtain a corrugated cardboard carton with a 375 pound test strength (for the Mainframe) or a 200 pound test strength (for the Waveform Calculator), and having inside dimensions of no less than six inches more than the instrument dimensions; this allows for cushioning.

2. Surround the instrument with polyethylene sheeting to protect the finish.

3. Cushion the instrument on all sides by tightly packing dunnage or urethane foam between the carton and the instrument, allowing three inches on all sides.

4. Seal the carton with shipping tape or with an industrial stapler.

5. Mark the address of the Tektronix Service Center and your return address on the carton in one or more prominent locations.

http://manoman.sqhill.com

THEORY OF OPERATION

This section describes the circuitry used in the 7854 Oscilloscope mainframe. The description begins with a discussion of the instrument, using the block diagram shown in Figure 2-1. Next, each circuit is described in detail with supporting illustrations, when appropriate, to show the relationship between the stages in each major circuit. Detailed schematics of each circuit are located in the Diagrams section at the rear of this manual. Refer to these schematics throughout the following circuit description for specific values and relationships.

BLOCK DIAGRAM

The following discussion is provided to aid in understanding the overall concept of the 7854 before the individual circuits are discussed in detail. A basic block diagram of the 7854 is shown in Figure 2-1. Only the basic interconnections between the individual blocks are shown on this diagram. Each major circuit within the instrument is given a block. The number of each block refers to the complete circuit diagram located at the rear of this manual.

DESCRIPTION

The Main Interface circuit connects vertical and horizontal signals from the plug-in compartment to the vertical and horizontal deflection systems.

Vertical signals to be displayed on the crt (cathode-ray tube) are applied to the Vertical Channel Switch circuit from both vertical plug-in compartments. The front panel VERTICAL MODE switch determines whether the signals from the LEFT VERT or RIGHT VERT compartments are displayed on the crt. At this point the signal path is split into an analog and a digital path. For the analog path, the selected vertical signal(s) passes through a Delay Line and is then amplified by the Vertical Amplifier circuits to bring it to the level necessary to drive the vertical deflection plates of the crt. The digital path begins with the Vertical Pickoff Amplifier which converts the push-pull signals applied to it from the Vertical Channel Switch to the single-ended signal required by the Vertical Sampler circuit. After some digital processing, which will be more fully explained later, the signal may be applied to the Vertical Amplifier from the Display D/A and Amplifier circuit along with alphanumeric readout signals to produce the required vertical deflection for display of stored waveforms and readout characters.

Horizontal signals for the crt display are connected to the Horizontal Channel Switch circuit from both horizontal plug-in compartments. The HORIZONTAL MODE switch determines whether the signals from the A HORIZ or B HORIZ units are displayed by the crt. Here, as in the vertical system, the signal path is split into an analog and a digital path. For the analog path, the selected horizontal signal(s) are amplified by the Horizontal Amplifier circuit which provides horizontal deflection to the crt. The Horizontal Pickoff amplifier converts the push-pull signals from the Horizontal Channel Switch to the single-ended signal required by the Horizontal Sampler circuit. After signal processing similar to that of the vertical system, stored waveform and alphanumeric readout deflection signals may be applied to the Horizontal amplifier by the Display D/A and Amplifier circuit when a display of that type is required.

The Readout Acquire circuit and the Display D/A and Amplifier circuit provide an alphanumeric display of information encoded by the plug-in units. The readout display is written on the crt on a time-shared basis with the analog or stored waveform display. The front-panel Mode switches and the Microprocessor circuits determine which plug-in units display readout information.

The internal trigger signals from the vertical plug-in units are connected to the A and B Trigger Selector circuits. The Mode Switch and Trigger Selector circuits direct trigger signals from the LEFT VERT or RIGHT VERT units to the A HORIZ or B HORIZ units.

The Mainframe Logic circuit develops control signals for use in other circuits within this instrument and the plug-in units. These control signals automatically determine the correct instrument operation in relation to the plug-in units, the plug-in unit control settings, and the 7854 control settings.

The CRT Circuit contains the control circuits necessary for operation of the crt. The Z-Axis Amplifier provides the drive signal to control the intensity level of the crt display.

http://manoman.sqhill.com

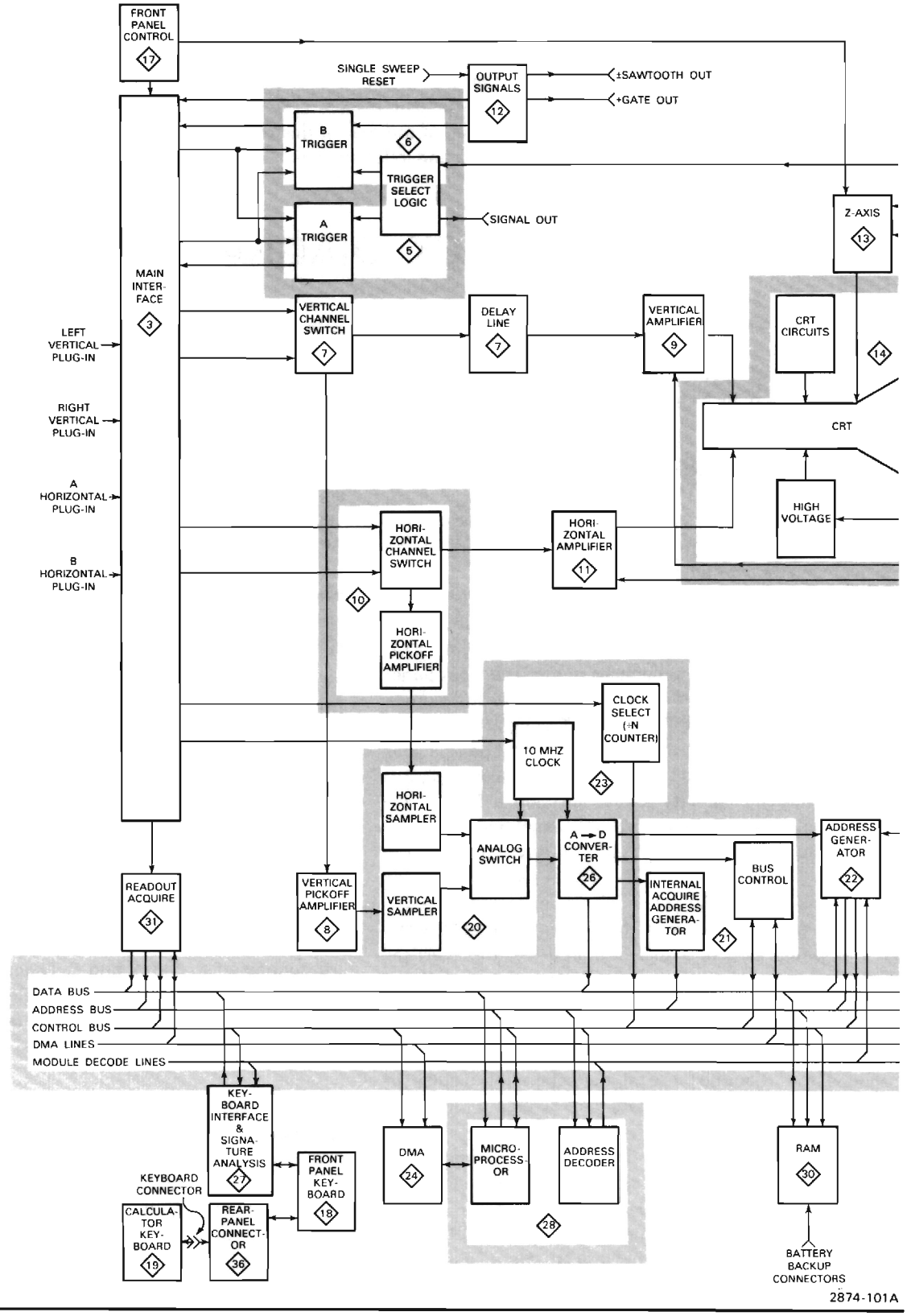

Figure 2-1. Block Diagram

http://manoman.sqhill.com

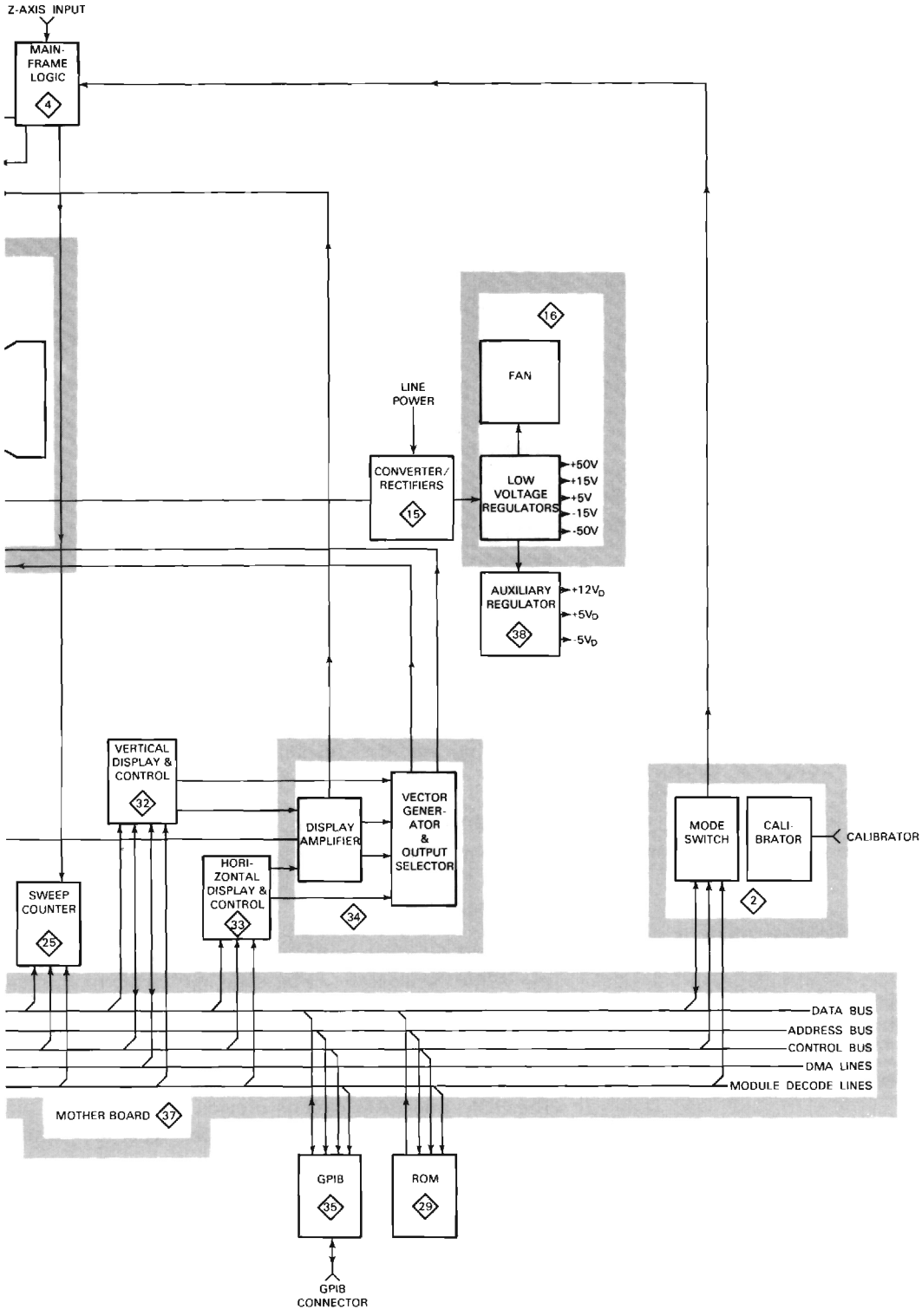

Figure 2-1. Block Diagram (continued)

http://manoman.sqhill.com

The Calibrator circuit produces a 1-kilohertz square-wave signal which can be used to check the calibration of this instrument and the compensation of probes. The calibrator signal is available as a voltage at the CALIBRATOR connector or as a current through a 40 milliampere optional current loop accessory.

The Output Signals circuit processes signals from the plug-in units for rear-panel output.

The Converter/Rectifiers and Low-Voltage Regulator circuits provide the power necessary to operate this instrument. The voltages are connected to all circuits within the instrument. The crt circuit contains a high-voltage power supply that provides accelerating potential for the crt.

The Auxilliary Regulator circuit regulates existing supply voltages down to the potentials required by the digital portion of this instrument.

The Front Panel Controls circuit provides for user control and adjustment of crt beam and readout intensity as well as other functions such as trace FOCUS and trace BEAMFINDER.

The Front Panel Keyboard circuit provides user control of the functions performed by the microprocessor in this instrument. Pushbutton switches on the front panel provide this user-to-machine interface. The external Calculator Keyboard is similar to the Front Panel Keyboard in that it provides user interface to the instrument microprocessor through a pushbutton keyboard. This keyboard must be connected to the instrument through the Rear Panel Connector circuit which also provides GPIB interface connectors for this instrument.

The Keyboard Interface and Signature Analysis circuit provides the electrical scanning necessary for the reading of the above mentioned keyboards. It also generates the signature analyzer clock and the associated control levels required to use a signature analysis system for troubleshooting this instrument.

The Mother Board provides the majority of interconnection within the digital portion of this instrument. Up to seven individual boards controlling various operations of the 7854 may be plugged into the Mother Board.

The Microprocessor and Control circuit is the control center of the digital portion of this instrument. All numerical and waveform manipulation as well as data storage and display are either performed or controlled directly or indirectly by this circuit.

The Readout Acquire circuit "reads" the step-analog plug-in data, representing vertical deflection factors, horizontal sweep rate, etc., and encodes it into a digital format. This digitial information is later processed and results in a crt display of one or more alphanumeric characters representative of the plug-in(s) setup conditions.

The Vertical and Horizontal Sampler circuit samples, stores, and buffers, instantaneous analog voltage levels from the Vertical and Horizontal Pickoff Amplifier circuits to the Digitizer so they may later be displayed on the crt. These samples, when displayed with other similar samples, represent a waveform derived over one or more crt sweep intervals.

The Digitizer circuit accepts the buffered analog voltage levels from the Vertical and Horizontal Sampler circuit and converts them to ten-bit digital words. The Digitizer Control Logic circuit, in conjunction with the Address Generator circuit, generates the addresses necessary to store this data for later use. It also generates the control levels necessary for the digitizer system to request and assume control of instrument busses to facilitate this storage. A special burst clock is required by the digitizer system when digitizing and is produced by the Digitizer Clock circuit. As the digitizer system digitizes a waveform, the Digitizer Sweep Counter detects when a complete sweep has occured. After a complete sweep has been detected, the microprocessor determines when the digitizer system has acquired enough points to adequately represent the waveform being digitized, depending on the resolution (points per waveform) desired.

The DMA Control circuit generates the timing sequence and control levels necessary for DMA (direct memory access) devices internal to the 7854 to take control of the instrument busses.

The GPIB (general purpose interface bus) circuit allows the 7854 Oscilloscope to be used in multiple instrument GPIB configurations. This circuit provides the communications and control interface necessary to GPIB operation.

The ROM and RAM circuits provide the permanent and temporary memory required for proper operation of this instrument.

Together, the Vertical and Horizontal Display and Control circuits provide the proper control voltages for operation of oscilloscope deflection and Z-Axis Amplifier circuitry when displaying digitally processed waveforms or characters. The Display D/A and Amplifier circuit converts the stored digital data representing waveform or character information to analog voltage levels to facilitate vertical and horizontal deflection of the crt beam.

http://manoman.sqhill.com

DETAILED CIRCUIT OPERATION

This portion of the Theory of Operation section provides a detailed description of the electrical operation and relationship of the circuits in the 7854. The theory of operation for circuits unique to this instrument is described in detail in this discussion. Circuits commonly used in the electronics industry are not described in detail.

The following circuit analysis is accompanied by supporting illustrations that give the names of the individual stages within the major circuits, and show how they are connected together to form the major circuit. These illustrations also show the inputs and outputs for each circuit and the relationship of the front-panel controls to the individual stages. The detailed circuit diagrams from which the illustrations are derived are shown in the Diagrams section.

TEKTRONIX DRAFTING CONVENTION

At Tektronix, logic symbols on schematics are drawn according to the function performed by the device in its particular application. By so doing, some deviations from the manufacturer's assigned symbology occur (although device electrical function is identical). An example of this would be an AND gate (all inputs HI—output HI; any input LO—output LO) drawn as an OR gate for LOs (any input LO—output LO; all inputs HI—output HI). The first gate shown in Table 2-1 illustrates this example and the remainder of the table further illustrates alternate ways of representing common logic gates. This table is meant only to familiarize the reader with Tektronix drafting convention and not as a complete source of alternate symbols used in schematic drafting. For operational characteristics of individual devices, refer to the manufacturer's data book.

1 CABLING

Diagram 1, in the Diagrams and Circuit Board Illustrations section, shows the inter-connections between major circuits within the 7854.

2 MODE SWITCH AND CALIBRATOR

The Mode Switch circuit implements the front-panel switching and provides the necessary logic for selection of vertical and horizontal deflection signals for the crt display. The Mode Switch circuit operates in conjunction with the Mainframe Logic circuit (diagram 4) and the Microprocessor and Control circuit (diagram 28) to develop control signals for use in other circuits within this instrument, and within plug-in units installed in the plug-in compartments.

The Calibrator circuit provides voltage outputs of 40 millivolts, 0.4 volt and 4 volts at the CALIBRATOR output connector. A current output of 40 milliamperes is available from the CALIBRATOR with an optional current loop adapter. When the current loop adapter is used, the CALIBRATOR switch must be set to the 4 V position.

Figure 2-2 shows a detailed block diagram of the Mode Switch and Calibrator circuits. A schematic of these circuits is shown on diagram 2, in Section 7, Diagrams and Circuit Board Illustrations. The schematic is divided by gray shaded lines separating the circuitry into major stages. Sub-headings in the following discussion use these stage names to aid in locating and identifying the components and portions of the circuitry described.

MODE SWITCH

The Mode Switch provides user control of the 7854 vertical and horizontal channel selection.

User commands from the front panel MODE switches, S1 and S2, are converted to BCD (binary coded decimal) by U1 and are then buffered by U61A. Plug-in commands from the plug-ins are sensed by comparator ICs U51 and U52. These logic levels are buffered by U62 and U61B. At intervals of approximately 20 ms, the microprocessor (diagram 28) pulls the $\overline{\text{FPR}}$ (front panel read) line at P63-1 LO, enabling U61 and U62, transferring the front-panel

http://manoman.sghill.com

TABLE 2-1
Common Logic Gates Illustrations

Basic	Alternate	Description of Basic and Alternate Symbols	Truth Tables: INPUT A	INPUT B	OUTPUT X
AND					
		A device with two or more inputs & one output.	LO	LO	LO
			LO	HI	LO
			HI	LO	LO
			HI	HI	HI
OR			**A**	**B**	**X**
		A device with two or more inputs & one output.	LO	LO	LO
			LO	HI	HI
			HI	LO	HI
			HI	HI	HI
NAND			**A**	**B**	**X**
		A device with two or more inputs & one output.	LO	LO	HI
			LO	HI	HI
			HI	LO	HI
			HI	HI	LO
NOR			**A**	**B**	**X**
	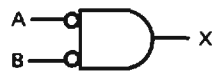	A device with two or more inputs & one output.	LO	LO	HI
			LO	HI	LO
			HI	LO	LO
			HI	HI	LO
INVERTER			**A**		**X**
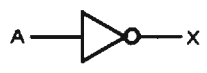		A device with one input & one output. The output is always the opposite state of the input.	LO		HI
			HI		LO
Negation Indicator Symbol		A small circle at the input or output of a symbol indicates that the LO state is significant. Absence of the circle indicates that the HI state is significant.			

[1]The first part of this table includes the alternate way to draw the same gate. The type of symbol used depends on how the gate is used in the circuit. The Basic symbols require an active HI input and the Alternate symbols require an active LO input.

http://manoman.sqhill.com

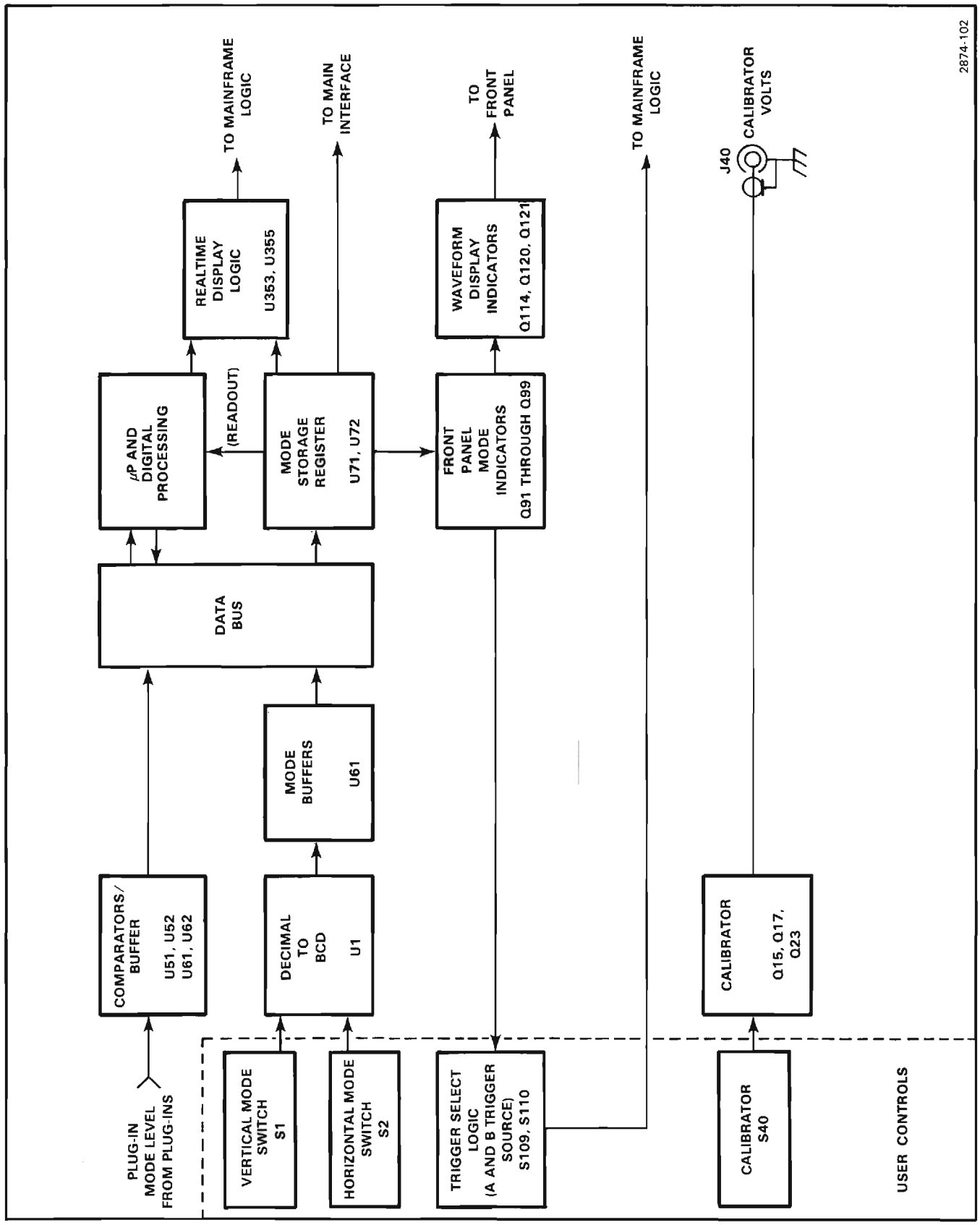

Figure 2-2. Mode Switch/Calibrator block diagram.

http://manoman.sqhill.com

mode command information and plug-in mode command information to the Data Bus. Any new information on the Data Bus at this time effects a change in the microprocessor function, and new control information is put onto the Data Bus by the microprocessor. This information is latched by the storage registers, U71 and U72, with the presence of a $\overline{WE}$ (write enable) or $\overline{FPW}$ (front panel write) command, which provide control over the front-panel mode indicators, Mainframe Logic (diagram 4), and part of the Display D/A system (diagram 34). The DISPRT (display real time) command to the real time display logic, U73 and U70 provides additional control signals to the Mainframe Logic circuit (diagram 4). The Trigger Select logic commands are user selectable by S109 and S110 and are tied to the Mainframe Logic circuit (diagram 4). Transistors Q121, Q114 and Q120 are the waveform display indicator driver transistors and provide current to the STORED INTensity, A INTENSITY and B INTENSITY indicator lights on the front panel, respectively.

CALIBRATOR

Transistors Q15 and Q17 compose a 1 kilohertz, square-wave oscillator. Oscillation occurs as follows: initially assume that Q15 is conducting and Q17 is not conducting. The voltage at the emitter of Q17 becomes more negative as C16 discharges through R19. Capacitor C16 discharges until the emitter-base junction of Q17 becomes forward biased. As Q17 begins conducting the oscillator changes states. Regeneration starts when Q17 conducts and C16 stops discharging; this reduces the collector current of Q15. Thus, the collector voltage of Q15 rises positive which causes the base and emitter of Q17 to rise positive. The positive going voltage is coupled by C16 to the emitter of Q15, turning it off.

Now, Q17 is conducting and Q15 is not conducting. The voltage at the emitter of Q15 goes negative as C16 charges through R16. When the emitter-base junction of Q15 becomes forward biased the oscillator will again change states to complete the cycle.

The square-wave signal produced at the collector of Q17 switches Q23 on and off. When Q23 is on, the current from R22 and R23 flows to ground. When Q23 is off, this current flows through CR26 and R26 into the voltage divider network of R27, R31, R32, R33, R34, R35 and R36 to produce the 4 volt, 0.4 volt and 40 millivolt Calibrator output voltages. The accuracy of the Calibrator is set by the 0.4 V DC adjustment, R25. Both the 4 V and 0.4 V calibrator push-button switches must be engaged when adjusting R25. The Calibrator frequency is set by the 1 kHz adjustment, R15.



MAIN INTERFACE

A schematic diagram of the Main Interface circuit is given on diagram 3, in Section 7, Diagrams and Circuit Board Illustrations. The schematic is divided by gray shaded lines separating the circuitry into major stages. These stages are related by name to other circuits within the instrument, depending upon the function they perform, and are used to aid in locating and identifying the portions of circuitry discussed here. Also, the signal and voltage connections of each interface connector are identified.

PLUG-IN INTERFACE

The Plug-in Interface stage consists of four multi-pin connectors and is used to connect signals between the plug-ins in the HORIZontal and VERTical plug-in compartments and the 7854 Oscilloscope mainframe. The gating scheme of U60 allows the selected horizontal plug-in to limit Z-Axis intensity when its sweep rate drops below 0.1 s/div, thus preventing burning of the crt. ICs U161, U65 and transistors Q61 and Q64 are current buffers for various signal levels.

VERTICAL CHANNEL SELECT LOGIC

The Vertical Channel Select Logic consists of U33, U32, Q17, Q19, Q27, Q36, CR19 and their associated components. This stage generates the controlling logic commands, Display Left and Display Right going to the Vertical Channel Switch circuit, diagram 7. The logic diagram for the Vertical Channel Selector Logic stage is shown in Figure 2-3A.

Inputs A and B at pins 14 and 2 of U33 select the output states at pins 7 and 9 of U33 according to the table in Figure 2-3B. The Dual Trace Channel Switch Control (DTCSC) signal, the plug-in mode signal (J2A16), the Mainframe Channel Switch signal, and the signal at pin P17-1 from the Mode Switch act as input signals that may be switched to output pins 7 and 9 of U33, in the manner shown by Figure 2-3. When the X-Y Inhibit signal is HI, U33 is disabled and the levels at both pins 7 and 9 go LO and are not dependent on any input signals. When the X-Y On signal goes HI the exclusive OR gates, U32C and U32D, act as inverters and all signals at pins 7 and 9 of U33 are inverted. If the X-Y On input should exceed about +2 volts, Q36 disables U33 and the outputs at pins 7 and 9 go LO.

http://manoman.sqhill.com

A

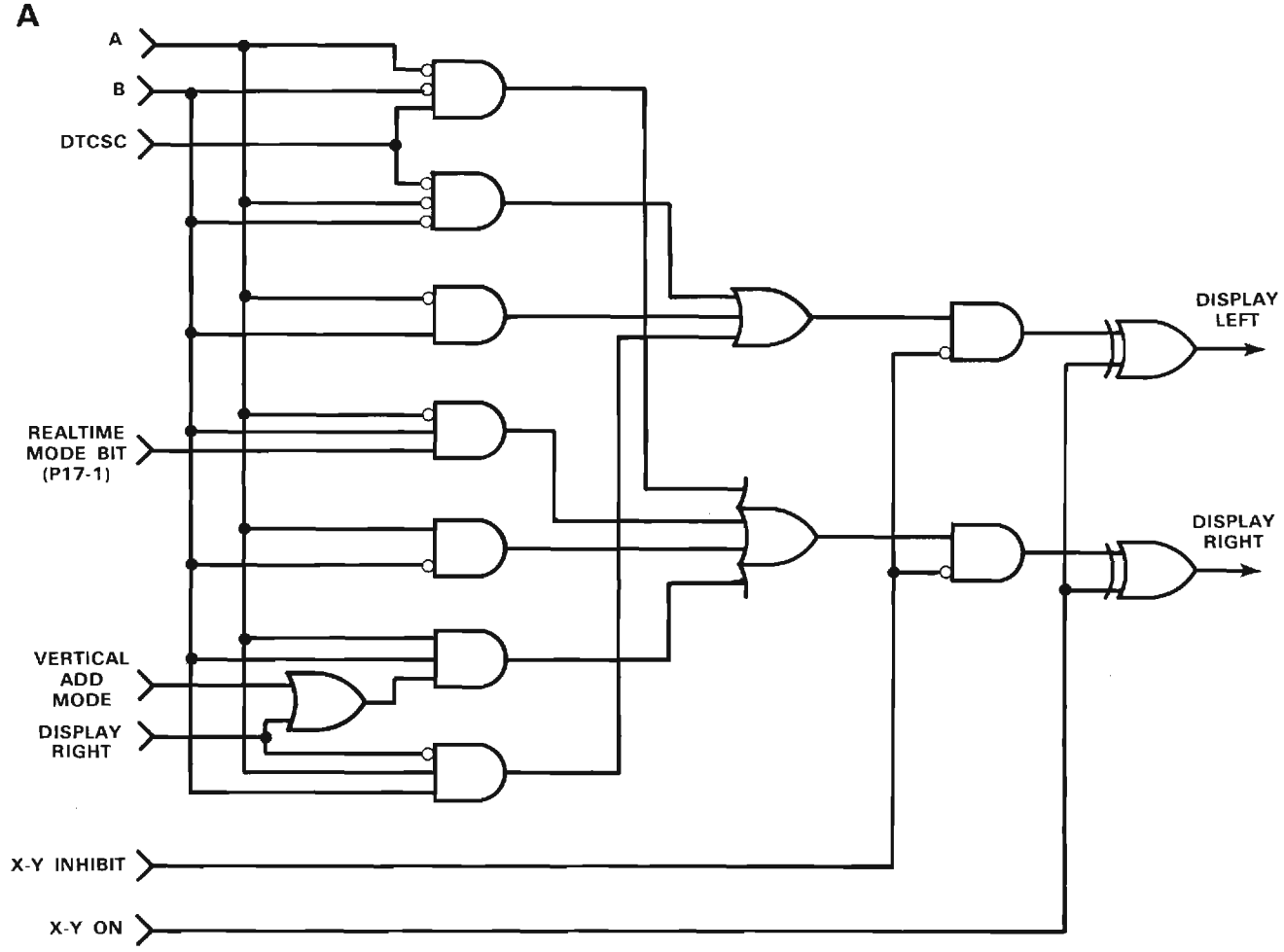

B

A	B	X-Y INHIBIT	X-Y ON	DISPLAY LEFT	DISPLAY RIGHT
LO	LO	LO	LO	$\overline{\text{DTCSC}}$	DTCSC
LO	HI	LO	LO	HI	REALTIME MODE BIT
HI	LO	LO	LO	LO	HI
HI	HI	LO	LO	$\overline{\text{DISPLAY RIGHT}}$	DISPLAY RIGHT OR VERTICAL ADD
*	*	HI	LO	LO	LO
*	*	HI	HI	HI	HI
LO	LO	LO	HI	$\overline{\text{DTCSC}}$	DTCSC
LO	HI	LO	HI	LO	$\overline{\text{REALTIME MODE BIT}}$
HI	LO	LO	HI	HI	LO
HI	HI	LO	HI	DISPLAY RIGHT	$\overline{\text{DISPLAY RIGHT}}$

*INDICATES THAT STATE DOES NOT MATTER.
— INDICATES INVERSION OF NAMED SIGNAL.

2874-103A

Figure 2-3. (A) Logic Diagram of the Vertical Channel Switch Logic on the Main Interface. (B) Input/output table of the Vertical Channel Switch logic on the Main Interface.

http://manoman.sqhill.com

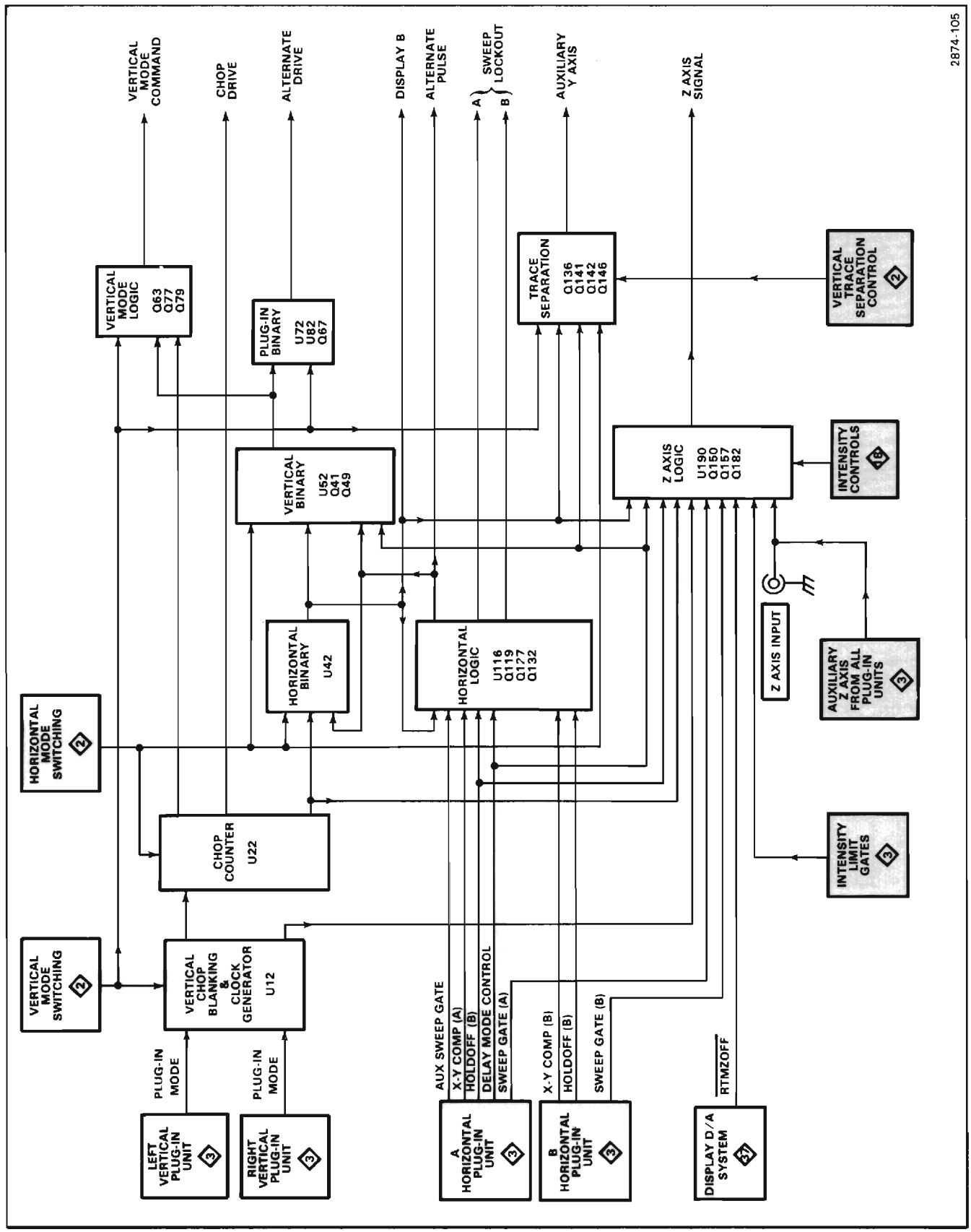

Figure 2-4. Detailed block diagram of the Mainframe Logic circuit.

http://manoman.sqhill.com

HORIZONTAL CHANNEL SELECT LOGIC

The Display B command, used as the switching control level applied to the Horizontal Channel Switch circuit (diagram 10), is developed by the Horizontal Channel Select Logic stage made up of U143, Q139 and Q147. The control levels at pins 2 and 14 of U143 determine the level of the Display B command at its output, pin 7. The control levels at pin 2 and 14 of U143 are as follows:

(1) Pin 2 HI and pin 14 HI—output at pin 7 follows the Mainframe Channel Switch Signal at input pin 3.

(2) Pin 2 LO and pin 14 HI—output at pin 7 is HI.

(3) Pin 2 LO and pin 14 LO—output at pin 7 follows the $\overline{\text{DTCSC}}$ signal at input pin 6.

(4) Pin 2 LO and pin 14 HI—output at pin 7 is LO.

Transistors Q139 and Q147 on the Main Interface board act as buffers and buffer the Mainframe Channel Switch Signal and Display B command, respectively to and from U143.

4 MAINFRAME LOGIC

A schematic diagram of the Mainframe Logic circuit is given on diagram 4, in Section 7, Diagrams and Circuit Board Illustrations. The schematic is divided by gray shaded lines separating the circuitry into major stages. These stages aid in locating components mentioned here. Sub-headings in the following discussion use these stage names to further identify portions of the circuitry on diagram 4.

The Mainframe Logic circuit develops control signals for use in other circuits within this instrument and any plug-in units installed in the vertical and horizontal compartments. These control signals automatically determine correct instrument operation in relation to the plug-in units installed or selected, plug-in control settings, and 7854 control settings. A detailed block diagram of the logic circuit is shown in Figure 2-4.

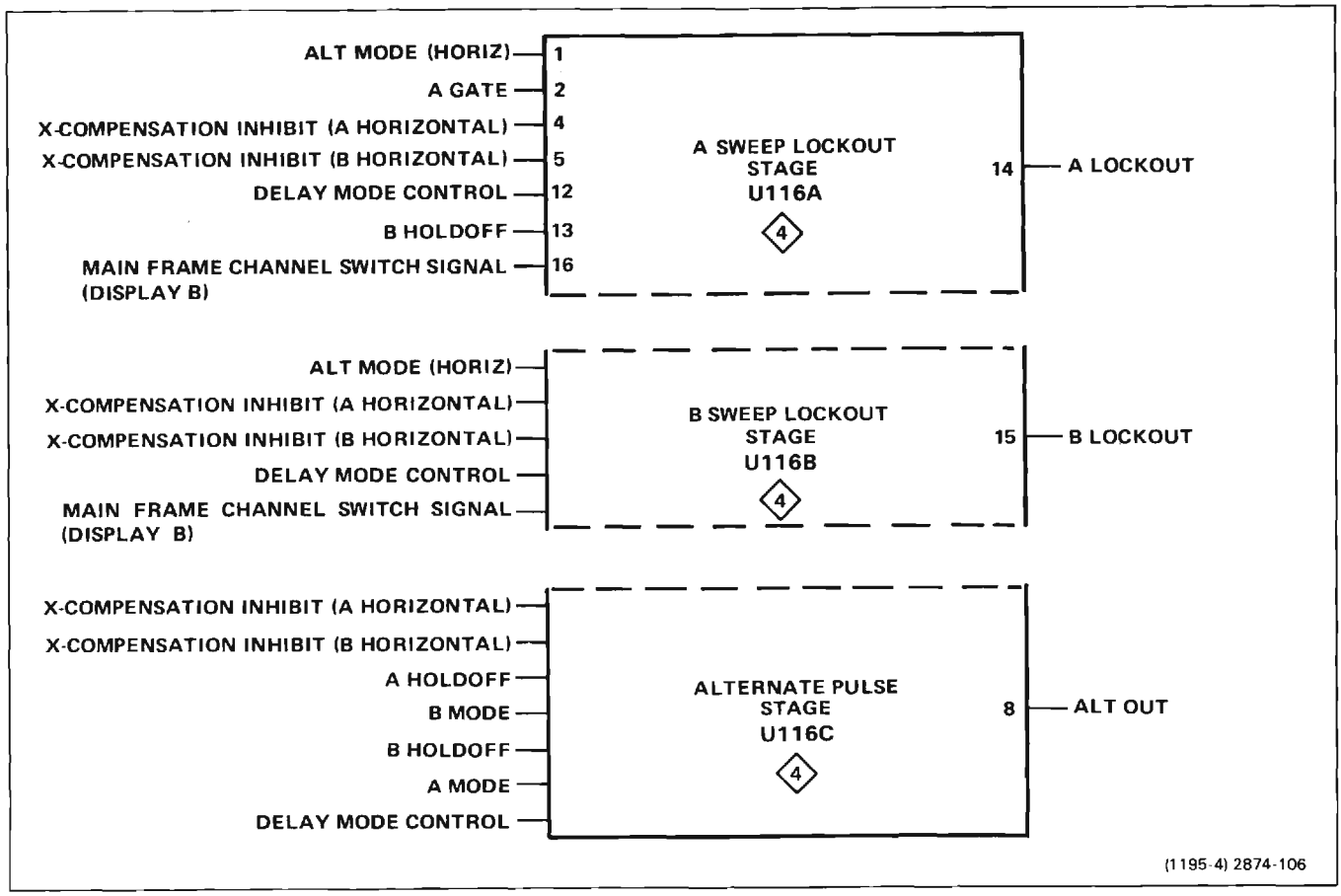

Figure 2-5. Breakdown of separate stages within Horizontal Logic IC (U116) showing inputs and output for each stage.

http://manoman.sqhill.com

HORIZONTAL LOGIC

The Horizontal Logic stage performs three separate logic functions: A Sweep Lockout, B Sweep Lockout, and ALT OUT (alternate pulse) generation. Most of the logic for these functions is contained within the Horizontal Logic IC, U116. Figure 2-5 identifies the three individual stages of U116 and the input and output terminals associated with each. Note that some of the input levels are connected internally to more than one of the individual stages.

A Sweep Lockout

The A Sweep Lockout portion of the Horizontal Logic IC (U116) produces an output level at the collector of Q127 (A Sweep Lockout) that determines when the A HORIZ time-base unit can produce a sweep. If this output is HI, the A HORIZ unit is locked out (disabled) so it cannot produce a sweep. If the level is LO, the A HORIZ unit is enabled and can produce a sweep when triggered.

As shown by Figure 2-6, only two combinations of input conditions to U116 will produce a HI A Sweep Lockout level. The first combination disables the A sweep while the B sweep is being displayed in the ALT HORIZONTAL MODE (both units must be in time-base mode) if nondelayed operation is being used. The second combination disables the A sweep during delayed-sweep operation so that the B sweep can complete its holdoff before the next A sweep begins.

B Sweep Lockout

The B Sweep Lockout stage produces an output level at the collector of Q132 that determines if the B HORIZ time-base unit can produce a sweep. A HI output level locks out (inhibits) the B HORIZ unit and a LO level enables the B HORIZ unit to produce a sweep.

As shown by Figure 2-7, the output of this stage is HI only under one set of input conditions to U116. This set of conditions disables the B sweep while the A sweep is being displayed in the ALT HORIZONTAL MODE switch position, if both time-base units are in a sweep mode and nondelayed sweep is used. For any other combination of input conditions, the B Sweep Lockout level is determined by the Delay Gate from A time-base unit; see Main Interface, diagram 3.

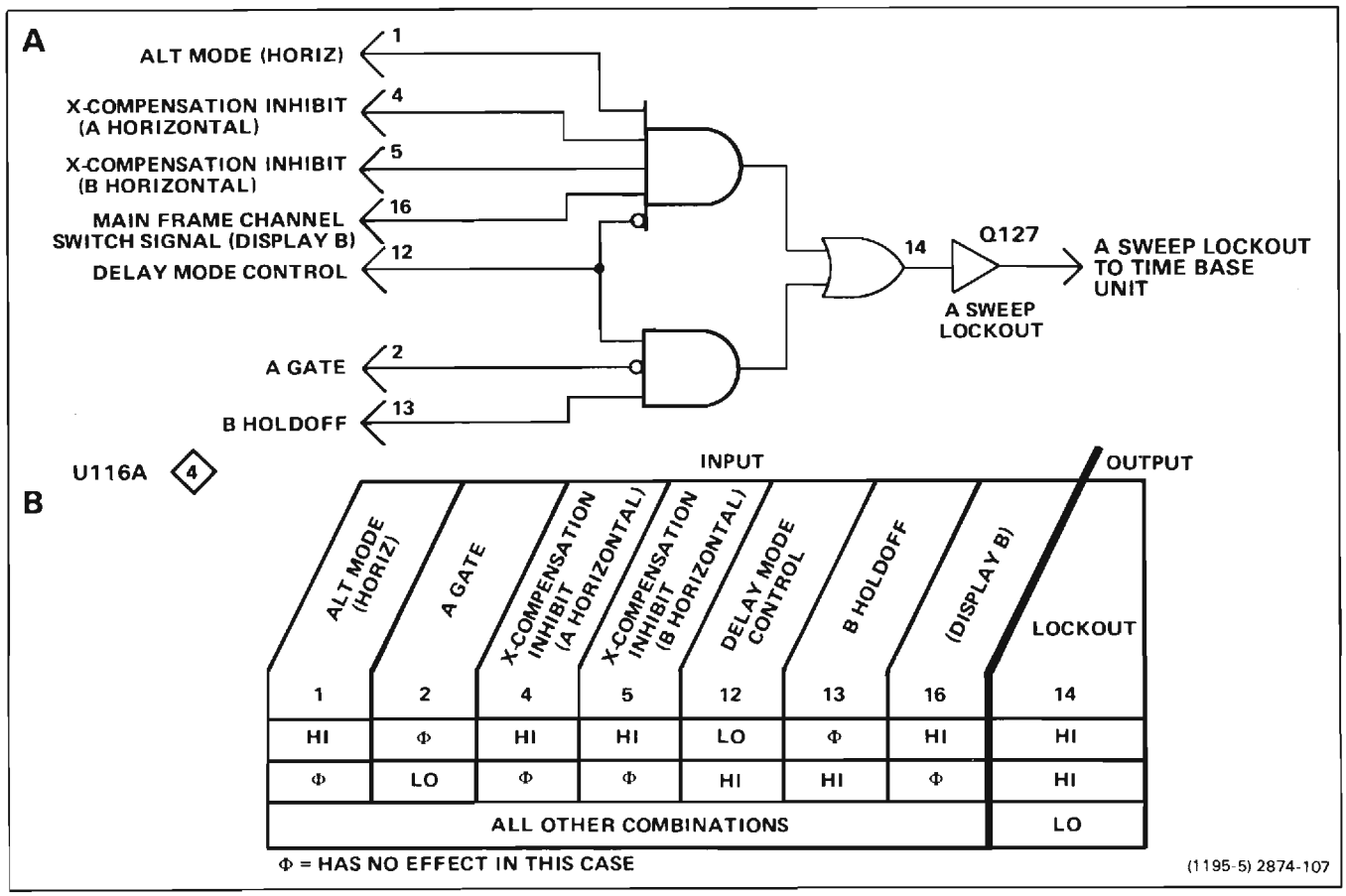

Figure 2-6. (A) Logic diagram for A Sweep Lockout Stage; (B) Table of input/output combinations.

http://manoman.sqhill.com

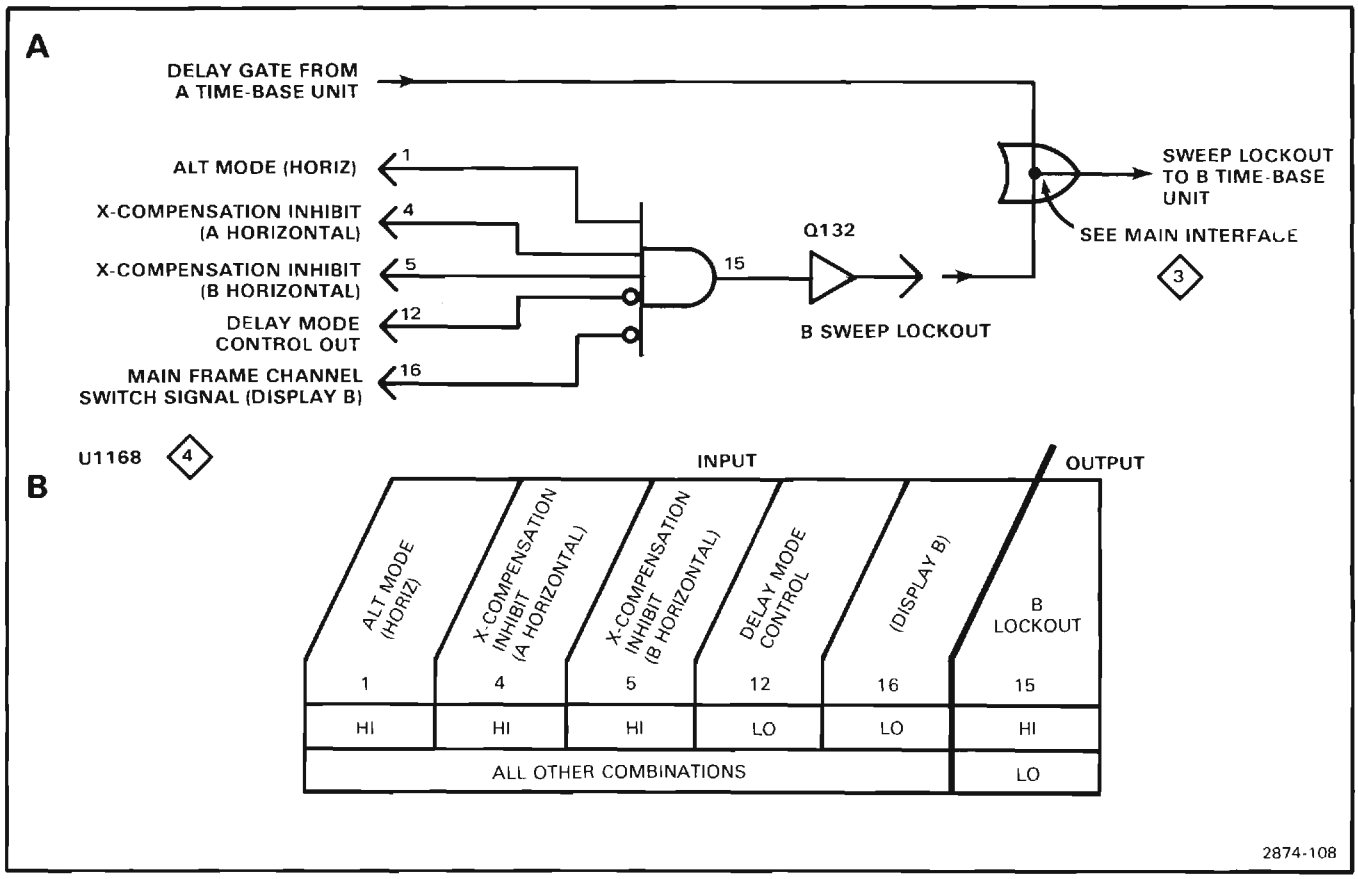

Figure 2-7. (A) Logic diagram for B Sweep Lockout stage; (B) Table of input/output combinations.

Alternate Pulse

The third function performed by the Horizontal Logic stage is to produce an ALT OUT (alternate pulse) for use by the Horizontal and Vertical Binary stages. The holdoff gate produced at the end of the sweep by the respective time-base unit is differentiated by either C109 or C112 to provide a positive-going pulse to pin 6 or 9 of U116. The differentiated A or B Holdoff gate may produce the alternate pulse depending upon the operating conditions as shown in Figure 2-8.

The following discussions describe the operation of U116 in relation to the various combinations of input conditions shown in Figure 2-8:

(1) A (Only) Mode—An ALT OUT (alternate) pulse is produced at the end of each A sweep when the HORIZONTAL MODE switch is set to the A position.

(2) B (Only) Mode—In the B position of the HORIZONTAL MODE switch, an ALT OUT pulse is produced at the end of each B sweep. (The A time-base must be in independent, nondelayed mode.)

(3) Alt or Chop Mode—When the HORIZONTAL MODE switch is set to ALT or CHOP (the A time-base unit must be in independent, nondelayed mode), an ALT OUT pulse is produced at the end of each sweep. For example, an alternate pulse is produced at the end of the A sweep, then at the end of the B sweep, again at the end of the A sweep, etc. Although ALT OUT pulses are produced in the CHOP horizontal mode, they are not used in this instrument.

(4) Delayed Sweep (A Delays B)—Wnen the A time-base unit is set for delayed operation, the operation of the Horizontal Logic stage is changed so an ALT OUT pulse is produced only at the end of the A sweep, even when the HORIZONTAL MODE switch is set to B. This is necessary since the A time-base establishes the amount of delay time for the B time-base unit whenever it is displayed.

(5) Amplifier Unit In Horizontal Compartment—When an amplifier unit is installed in either of the horizontal plug-in compartments, the ALT OUT pulse can be produced only from the remaining time-base unit. If amplifier units are installed in both horizontal compartments, an ALT OUT pulse is not produced since there are no time-base units to produce a holdoff pulse.

http://manoman.sqhill.com

A

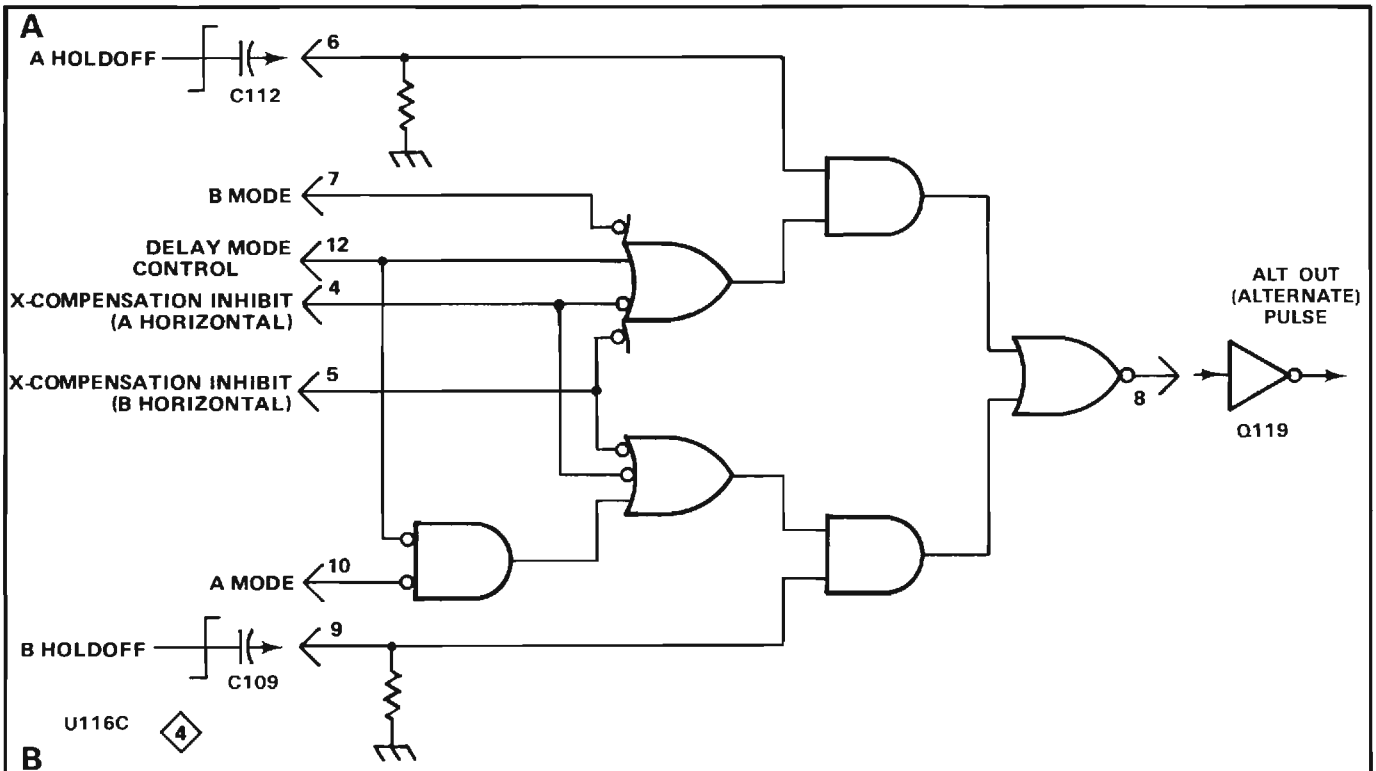

B

INPUT							OUTPUT	
X-COMPENSATION INHIBIT (A HORIZONTAL) 4	X-COMPENSATION INHIBIT (B HORIZONTAL) 5	A HOLDOFF 6	B MODE 7	B HOLDOFF 9	A MODE 10	DELAY MODE CONTROL 12	TIME BASE WHICH IS SOURCE OF ALTERNATE PULSE 8[2]	HORIZONTAL CONDITIONS
HI	Φ	HI[1]	LO	Φ	HI	Φ	A	A ONLY
Φ	HI	Φ	HI	HI[1]	LO	LO	B	B ONLY
HI	HI	HI[1]	LO	HI[1]	LO	LO	A AND B	ALT OR CHOP
HI	HI	HI[1]	Φ	Φ	Φ	HI	A	A DELAYS B
HI	LO	HI[1]	LO	LO	Φ	Φ	A	A WITH VERTICAL UNIT IN B COMPARTMENT.
LO	HI	LO	Φ	HI[1]	LO	LO	B	B WITH VERTICAL UNIT IN A COMPARTMENT.
ALL OTHER COMBINATIONS							NO OUTPUT PULSE (LO AT OUTPUT)	

Φ = HAS NO EFFECT IN THIS CASE

[1]POSITIVE-GOING PULSE. WHERE BOTH A AND B HOLDOFF ARE REQUIRED TO BE HI, A HI AT EITHER INPUT PRODUCES AN ALTERNATE PULSE.

[2]NEGATIVE-GOING PULSE.

(1195-7) 2874-109

Figure 2-8. (A) Logic diagram for Alternate Pulse Generator stage; (B) Table of input/output combinations.

http://manoman.sqhill.com

Z-AXIS LOGIC

The Z-Axis Logic stage produces an output current signal at pin 8 of U190 which sets the intensity of the crt display, except for the stored waveforms and alphanumeric readout display, which is controlled by the Display D/A circuit input to the Z-Axis and Focus Amplifier circuit (diagram 13). The output current at pin 8 is determined by the setting of the Z-Axis Level adjustment, A and B INTENSITY controls, the conditions of various logic gates, and by the Aux Z-Axis input. The Aux Z-Axis input is produced by either the external Z-AXIS INPUT (rear panel) or by an input from any of the plug-in units; see Main Interface, diagram 3. The input current from the A and B INTENSITY controls is switched so the output current matches the horizontal display selected. A HI Z-Axis Limit input applied to the base of Q150 or a LO Intensity Limit level from the horizontal plug-ins (via U60D) to the emitter of Q157 reduces current drive and limits display intensity. The Vertical Chopped Blanking, Horizontal Chopped Blanking, and $\overline{\text{RTMZOFF}}$ (realtime display Z-axis off) signal from the Display D/A circuit are applied to this stage to block the output current and blank the crt display for vertical chopping, horizontal chopping, or during a stored waveform or alphanumeric readout display.

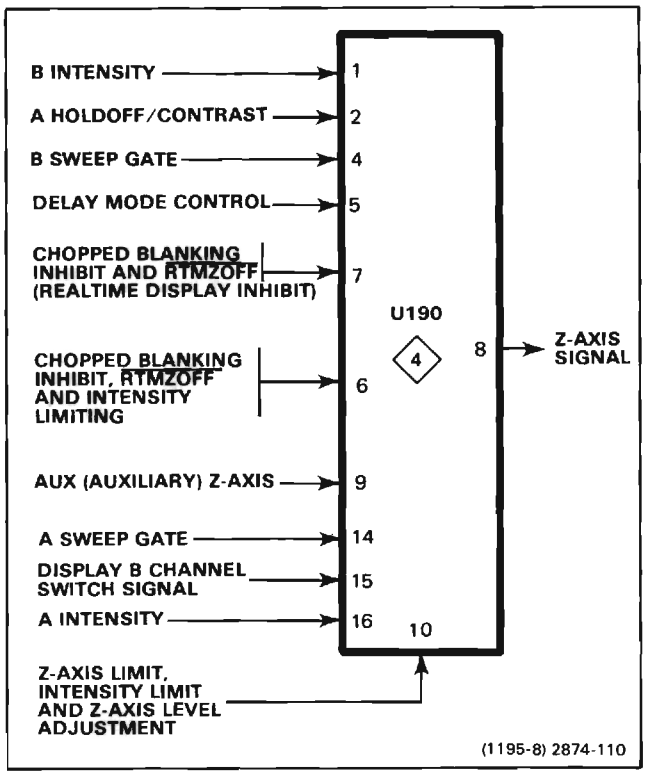

Figure 2-9. Input and output pins for Z-Axis Logic IC (U190).

Figure 2-9 identifies the inputs and the output of the Z-Axis Logic IC (U190). All inputs except pins 5 and 15 are current driven with pins 1, 2, 9, and 16 variable from zero to four milliamperes.

The Vert Chop Blank signal, connected to pin 7, and the Horiz Chop Blank and the $\overline{\text{RTMZOFF}}$ signal applied to U190 through Q103 enables or disables this stage to control all output current. Quiescently, the levels at pins 6 and 7 are HI so that the intensity current from pins 1, 2, 9, and 16 can pass to the output. However, pin 7 goes LO during vertical chopped blanking, and both pins 6 and 7 go LO during horizontal chopped blanking or during a digitized display. This blocks the output current and the crt is blanked. The Vert Chop Blank signal is connected to pins 6 and 7 of U190 directly from pin 4 of U12. The Horiz Chop Blank inhibit signal is connected to U190 from pin 4 of U22 through L35, R35, Q103, CR162 and CR161. Notice that this signal is connected to the collector of Q103. This transistor is normally operating in the saturated condition, and the HI Horiz Chop Blank inhibit level from U22 is the collector source voltage. When the Horiz Chop Blank inhibit level goes LO, the current through Q103 drops to produce a corresponding LO level at its emitter. This level is connected to pins 6 and 7 of U190 through CR162 and CR161.

Transistor Q103 also controls the levels at pins 6 and 7 for digitized displays. The $\overline{\text{RTMZOFF}}$ command from the Display D/A circuit is connected to the base of Q103 through R103. This level is normally HI, so Q103 operates as determined by the Horiz Chop Blank inhibit level at its collector. When a digitized display is to be presented, $\overline{\text{RTMZOFF}}$ goes LO and this level is coupled to the base of Q103 through R103. Transistor Q103 is then reverse biased to produce a LO level at its emitter. This level is coupled to pins 6 and 7 of U190 through CR162 and CR161 to block the Z-Axis Logic output current during the digitized display. (The intensity of the digitized display is determined by a separate Display D/A intensity level connected directly to the Z-Axis Amplifier; see Z-Axis and Focus Amplifier description.) Diode CR159 clamps the emitter of Q103 at about −0.6 volt when the transistor is off.

The A INTENSITY control sets the output current level when the A Gate at pin 14 is HI and the Display B command is LO. Whenever the A Gate level goes LO indicating that the A sweep is complete or the Display B Command goes HI indicating that the B sweep is being displayed, the A INTENSITY current is blocked. The current from the A INTENSITY control is connected to pin 16 through R192.

In the delayed mode, current is added to the A INTENSITY current during a portion of the A sweep time to intensify a portion of the trace. This intensified portion is

http://manoman.sqhill.com

A

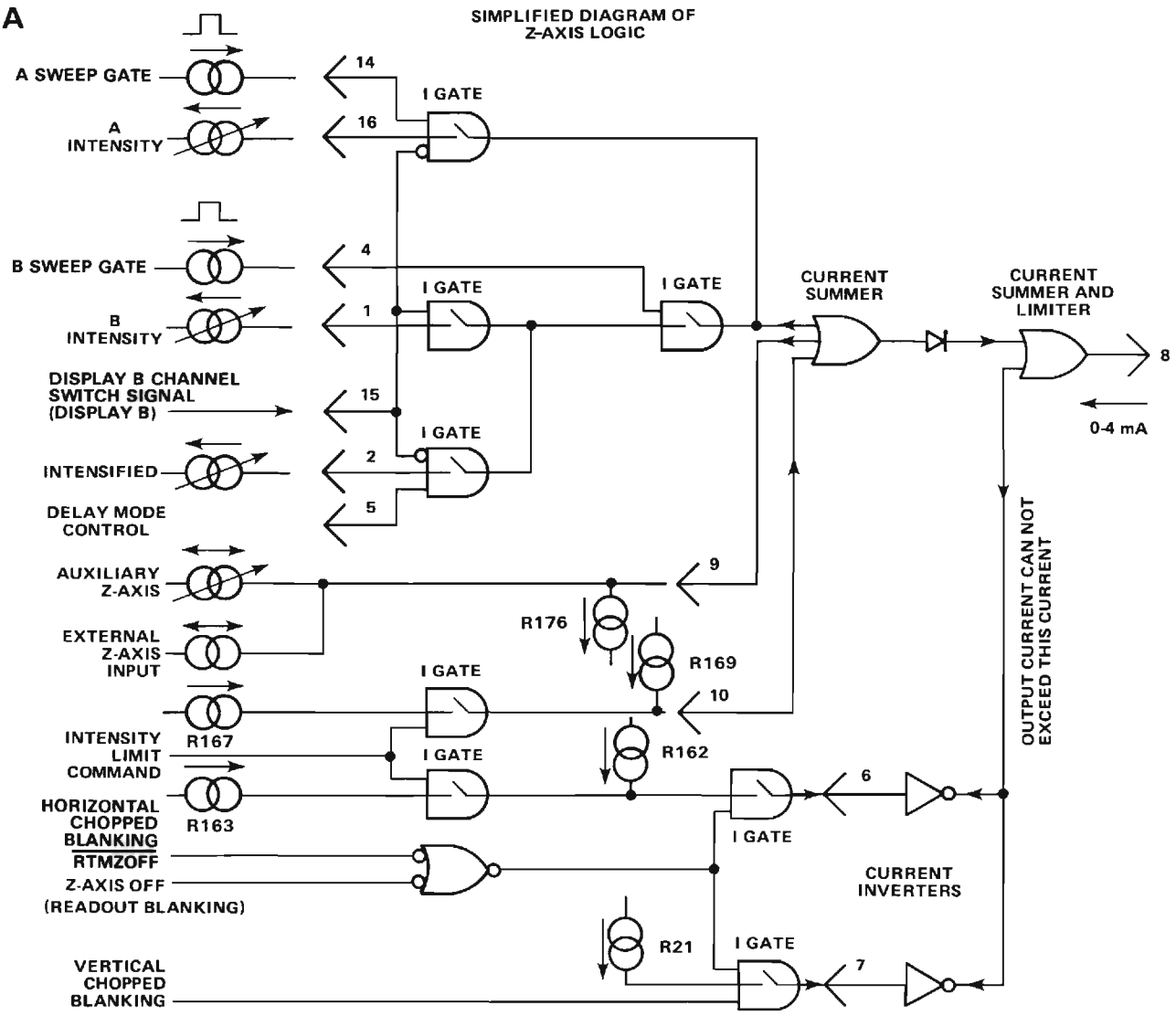

B

A INTENSITY	B INTENSITY	INTENSIFIED	A GATE	B GATE	DELAY MODE CONTROL	(DISPLAY B)	Z-AXIS SIGNAL	SOURCE OF Z-AXIS SIGNAL
16	1	2	14	4	5	15	8	
VAR	Φ	Φ	HI	Φ	LO	LO	VAR	A INTENSITY
VAR	Φ	Φ	HI	LO	HI	LO	VAR	A INTENSITY
VAR	Φ	VAR	HI	HI	HI	LO	VAR	A INTENSITY PLUS INTENSIFIED
Φ	VAR	Φ	Φ	HI	Φ	HI	VAR	B INTENSITY
OTHER COMBINATIONS							LO	NO OUTPUT

HI = MAX VOLTAGE OR CURRENT
LO = MIN VOLTAGE OR CURRENT
VAR = VARIABLE CURRENT, 0 to 4 mA

Φ = HAS NO EFFECT

(1988-34) 2874-111

Figure 2-10. (a) Logic diagram for Z-Axis Logic stage; (B) Table of input/output combinations.

http://manoman.sqhill.com

coincident with the B Sweep Gate pulse to provide an indication of which portion of the A sweep is displayed in the delayed mode. The A intensifing current is supplied to pin 2 of U190 through the front-panel CONTRAST adjustment, R80. Current to R80 is derived from the A Intensity control. With this configuration, the intensified current increases as the A INTENSITY control setting is advanced to provide a proportional intensity increase in the intensified zone as the overall A sweep intensity increases. Therefore, the intensified zone is more readily visible at high intensity levels. The CONTRAST adjustment is a front panel screwdriver adjustment and allows presetting for optimum intensity contrast between the intensified portion and the overall sweep. The intensified current is added to the A INTENSITY current to produce an intensified zone on the A sweep under the following conditions: HI A Gate level at pin 14, LO Display B command at pin 15, HI B Gate level at pin 4, and a HI Delay Mode Control input level at pin 5.

The B INTENSITY control determines the output current when the B Gate level at pin 4 and the Display B command at pin 15 are both HI. The current from the B INTENSITY control is connected to the Z-Axis Logic stage through R196.

The current level established by the intensity controls can be altered by the Aux Z-Axis current level at pin 9. The current at this pin can come from the Z-AXIS INPUT connector on the rear panel or from any of the plug-in compartments. This current either increases or decreases (depending on polarity) the output current to modulate the intensity of the display. Input from the Z-AXIS INPUT connector allows the trace to be modulated by external signals. The Aux Z-Axis inputs from the plug-in compartments allow special-purpose plug-in units to modulate the display intensity. Diodes CR176 and CR177 limit the maximum voltage change at pin 9 to about ±0.6 volt to protect the Z-Axis Logic stage if an excessive voltage is applied to the Z-AXIS INPUT connector. Figure 2-10 shows a logic diagram and a table of the input/output conditions of the Z-Axis Logic stage.

HORIZONTAL BINARY

The Horizontal Binary stage develops the mainframe channel switch signal (Display B) to determine which horizontal plug-in unit provides the sweep displayed on the crt. When this level is HI, the B HORIZontal unit is used for the display; when it is LO, the A HORIZontal unit is used. Figure 2-11 shows the input and output pin assignments for the Horizontal Binary IC (U42).

The Display B command is used in the following stages within the Mainframe Logic circuit: Horizontal Logic (A and B Sweep Inhibit), Z-Axis Logic, Vertical Binary and

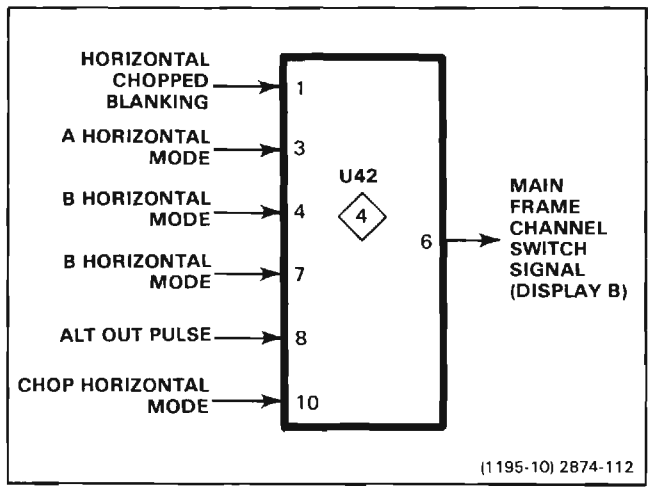

Figure 2-11. Input and output pins for Horizontal Binary IC (U4358).

Trace Separation. In addition, it is connected to the following circuits elsewhere in the instrument to indicate which horizontal unit is to be used during display: Main Interface (A and B HORIZ plug-in compartments), and Horizontal Interface (for horizontal channel selection).

The levels on pins 3, 4, 7 and 10 of U42 are determined by the HORIZONTAL MODE switch (see diagram 2). This switch indicates which horizontal mode has been selected by providing a HI output level on only one of four output lines; the remaining lines stay LO.

The Horizontal Binary stage operates as follows for each of the four positions of the HORIZONTAL MODE switch (refer to Figure 2-12 for the logic diagram and table of input/output conditions for the Horizontal Binary stage):

A Mode

When the HORIZONTAL MODE switch is set to A, the Display B command is LO to indicate to all circuits A horizontal unit is providing the display sweep.

B Mode

Selecting the B horizontal mode provides a HI Display B Command to all circuits.

CHOP Mode

In the CHOP position of the HORIZONTAL MODE switch, the Display B command switches between the HI and LO levels to produce a display that alternates between the A and B horizontal units at a 0.2 MHz rate. The repetition rate of the Display B command in this mode is determined by the Horiz Chop Blank pulse (see Chop Counter description). Each time the Horiz Chop Blank pulse at pin 1 goes LO, the output at pin 6 switches to the opposite state.

http://manoman.sqhill.com

A

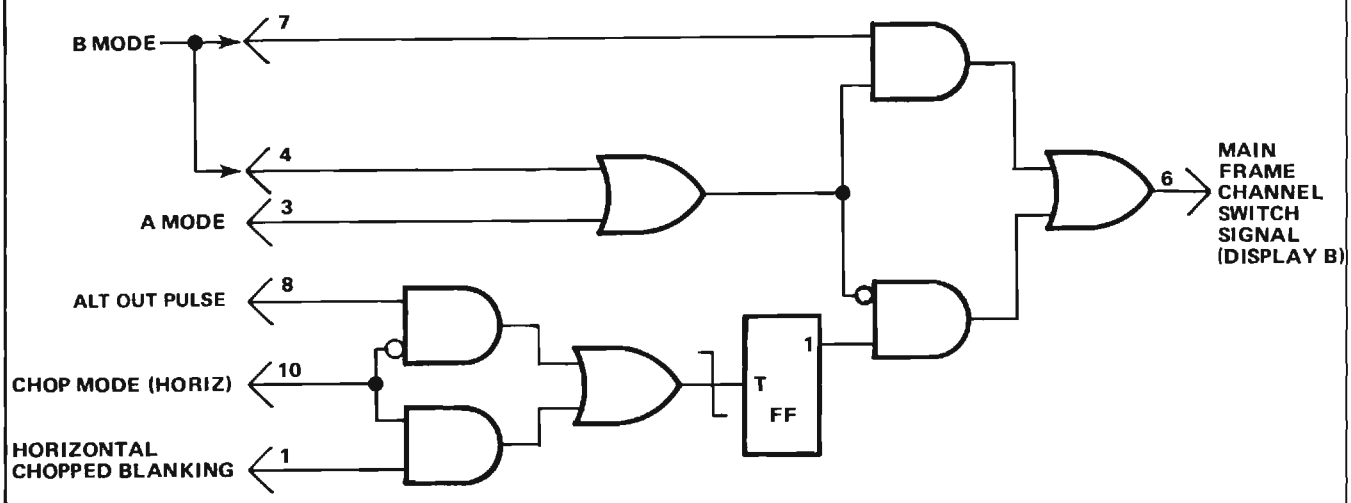

B U42 ◇4

INPUT						OUTPUT	
HORIZONTAL CHOPPED BLANKING	A MODE	B MODE	B MODE	ALT OUT PULSE	CHOP MODE (HORIZ)	(DISPLAY B)	
1	3	4	7	8	10	6	HORIZONTAL DISPLAY
Φ	HI	LO	LO	Φ	LO	LO	A HORIZONTAL UNIT
Φ	LO	HI	HI	Φ	LO	HI	B HORIZONTAL UNIT
LO[1]	LO	LO	LO	Φ	HI	n+1[2]	CHOP BETWEEN A AND B
Φ	LO	LO	LO	LO[1]	LO	n+1[3]	ALTERNATE BETWEEN A AND B

Φ = HAS NO EFFECT IN THIS CASE

n+1 = IF OUTPUT IS LO PRIOR TO LO[1], IT GOES HI, AND VICE VERSA

[1] ACTUATED BY NEGATIVE-GOING EDGE.

[2] REPETITION RATE ONE-HALF HORIZONTAL CHOPPED BLANKING RATE.

[3] REPETITION RATE ONE-HALF ALTERNATE PULSE RATE.

(1195-11) 2874-113

Figure 2-12. (A) Logic diagram for Horizontal Binary stage; (B) Table of input/output combinations.

http://manoman.sqhill.com

ALT Mode

For ALT horizontal operation, the Display B command switches to the opposite state each time the negative portion of the Alt Out pulse is received from the Horizontal Logic stage through Q119. Repetition rate of the Display B command in this mode is one-half the repetition rate of the Alt Out pulse applied to pin 8.

VERTICAL BINARY

The Vertical Binary stage produces the Display Right command, to determine which vertical unit is to be displayed when the VERTICAL MODE switch is set for ALT. When this output level is HI, the RIGHT VERT unit is displayed; when it is LO, the LEFT VERT unit is displayed. In the ALT or CHOP positions of the HORIZONTAL MODE switch (nondelayed operation only), the output of this stage is slaved to the output of the Horizontal Binary stage so that the Display Right command is always HI when the Display B command is LO, and vice versa. This action allows independent-pairs operation (sweep-slaving) in the ALT position of the VERTICAL MODE switch and the ALT or CHOP positions of the HORIZONTAL MODE switch, whereby the LEFT VERT unit is always displayed at the sweep rate of the B time-base and the RIGHT VERT unit is displayed at the sweep rate of the A time-base. Thus, independent-pairs operation can simulate dual-beam operation for repetitive sweeps.

When the A time-base unit is set to the delaying mode, the repetition rate of the Display Right command is one-half the repetition rate of the Display B command. This results in each vertical unit being displayed first against the A time-base unit (delaying), then the B time-base unit (delayed), before the display is switched to the other vertical unit.

Figure 2-13 illustrates pin assignments for the Vertical Binary IC (U52).

The Display Right command is used in the Plug-In Binary and Vertical Mode Logic stages. The Vertical Binary stage (U52) uses the same type of IC as the Horizontal Binary stage. Notice the Display A command level at pin 7. This input is the inverse of the Display B command level at pin 8 (Q49 generates the Display A Command level). Also, notice the line connected to pin 4 of the Vertical Binary IC U52. The level at pin 4 is generated by Q41 and is HI only when the HORIZONTAL MODE switch is set for ALT or CHOP and the time-base units are in nondelayed operation. The Vertical Binary IC uses the information at pin 4 for correct slaving of the Display Right command to the Display B command (necessary for independent-pairs operation).

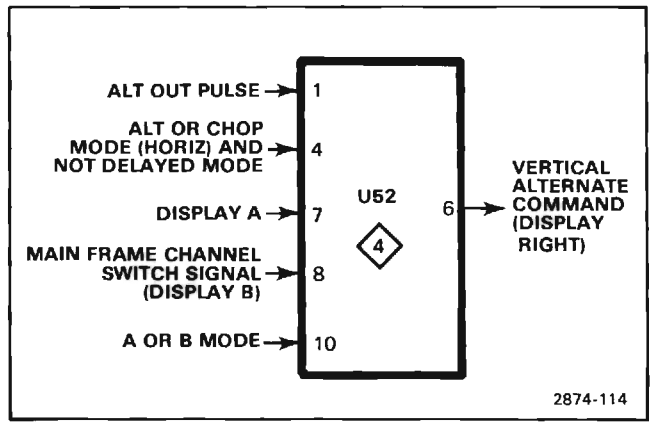

Figure 2-13. Input and output pins for Vertical Binary IC (U52).

The following discussions describe the operation of the Vertical Binary stage in relation to the modes of operation that can occur. Figure 2-14A shows a logic diagram of the Vertical Binary stage. An input/output table for this stage is given in Figure 2-14B.

A or B Mode

When the HORIZONTAL MODE switch is set to either A or B, the Display Right command switches to the opposite state each time an Alt Out pulse is received from the Horizontal Logic stage. Repetition rate of the Display Right command in this mode is one-half the repetition rate of the Alt Out pulse. The input conditions for these modes are:

Pin 1 LO; Alt Out pulse generated by Horizontal Logic stage goes negative;

Pin 4 LO; (HORIZONTAL MODE switch in any position except ALT or CHOP, or the A time-base unit is set for delayed sweep); and

Pin 10 HI; HORIZONTAL MODE switch set to A or B.

ALT or CHOP Mode (HORIZONTAL)—Nondelayed

In the ALT or CHOP positions of the HORIZONTAL MODE switch, the output level at pin 6 is the same as the Display A command level at pin 7. The Display A command level is produced by inverting the Display B command from the Horizontal Binary stage. Therefore, the repetition rate of the output signal is the same as the Display B command. The result, with the VERTICAL MODE switch set to ALT and the A time-base unit set for nondelayed operation, is that the RIGHT VERT unit is always displayed at the sweep rate of the A time-base

http://manoman.sqhill.com

A

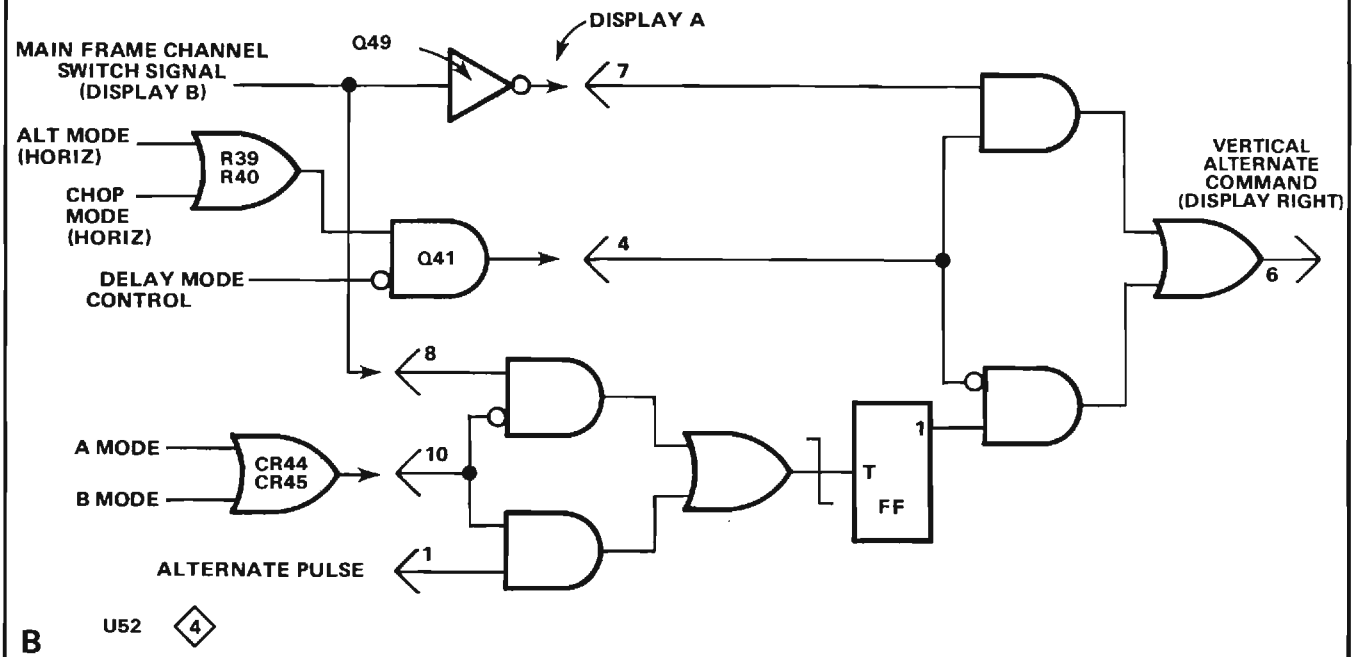

B

INPUT					OUTPUT	
ALTERNATE PULSE	ALT OR CHOP MODE (HORIZ) AND NOT DELAYED MODE	DISPLAY A	(DISPLAY B)	A OR B MODE	VERTICAL ALTERNATE COMMAND (DISPLAY RIGHT)	
1	4	7	8	10	6	HORIZONTAL MODE
LO[1]	LO	Φ	Φ	HI	n+1[2]	A OR B
Φ	HI	HI	LO	LO	HI	DISPLAY RIGHT } ALT OR CHOP, NON-DELAYED MODE (SWEEP-SLAVING)
Φ	HI	LO	HI	LO	LO	DISPLAY LEFT }
Φ	LO	Φ	LO[1]	LO	n+1[3]	ALT OR CHOP, DELAYED MODE

Φ = HAS NO EFFECT IN THIS CASE.

n+1 =IF OUTPUT IS LO PRIOR TO LO[1] IT GOES HI, AND VICE VERSA.

[1] ACTUATED BY NEGATIVE-GOING EDGE.

[2] REPETITION RATE ONE-HALF ALTERNATE PULSE RATE.

[3] REPETITION RATE ONE-HALF DISPLAY B RATE.

(1195-13) 2874-115

Figure 2-14. (A) Logic diagram for Vertical Binary stage; (B) Table of input/output combinations.

http://manoman.sqhill.com

unit, and the LEFT VERT unit is always displayed at the sweep rate of the B time-base unit (independent-pairs operation or sweep slaving). The input conditions to provide a HI output level so that the RIGHT VERT unit can be displayed at the A sweep rate are:

Pin 4 HI; (HORIZONTAL MODE switch set to ALT or CHOP with nondelayed sweep);

Pin 7 HI; The A sweep is to be displayed (Display B command LO); and

Pin 10 LO; HORIZONTAL MODE switch set to any position except A or B.

The input conditions to provide a LO output level so that the LEFT VERT unit can be displayed at the B-sweep rate are:

Pin 4 HI; (HORIZONTAL MODE switch set to ALT or CHOP with nondelayed sweep);

Pin 7 LO; The B sweep is to be displayed (Display B command HI); and

Pin 10 LO; HORIZONTAL MODE switch set to any position except A or B.

ALT or CHOP Mode (HORIZONTAL)—Delayed

If the A time-base unit is set to the delayed mode when the HORIZONTAL MODE switch is set to either ALT or CHOP, the operation of the stage is changed from that discussed above. Now, the Display Right command switches between the HI and LO states at a rate that is one-half the repetition rate of the Display B command. The resultant crt display in the ALT position of the VERTICAL MODE switch allows the RIGHT VERT unit to be displayed first against the A sweep (delaying) and then against the B sweep (delayed). Then the display switches to the LEFT VERT unit and is displayed consecutively against the A and B sweeps in the same manner. The input conditions for this mode of operation are:

Pin 4 LO; (The A time-base unit set for delayed operation);

Pin 8 HI or LO; Display Right command changes state at HI to LO transition of Display B command; and

Pin 10 LO; HORIZONTAL MODE switch set to any position except A or B.

PLUG-IN BINARY

The Plug-In Binary stage produces the plug-in Alternate Drive command to alternate dual-trace plug-in units. The Plug-In Binary IC, U82 is the same type of integrated circuit used in the Horizontal Binary and Vertical Binary stages. Figure 2-15 shows the pin assignments for the Plug-In Binary IC (U82).

Additional control from the mode switch (pins 2 and 14) and digitizer circuitry (pin 10) of the Plug-in Binary stage is provided by U72. Refer to Figure 2-16 for the logic diagram and input/output table for the Plug-in Binary stage.

Input pins 2 and 14 from the status bits latched into U71 of the Calibrator and Mode Switch circuit (diagram 2) indicating plug-in status (channel), are applied to U72 and control a pair of outputs (pins 7 and 9) which are tied to input pins 3 and 7, respectively of U82 (Plug-in Binary). Four possible output conditions of U82 exist, depending on the input levels at pins 14 and 2 of U72, and are as follows:

(1) Pin 14 HI and Pin 2 HI-Pin 7 LO—Pin 9 follows the vertical alternate command present at input pin 8 of U82. The vertical alternate command is coupled through Q67 and U72 to pin 7 of U82. This mode essentially shorts pin 7 and pin 8 of U82 together.

(2) Pin 14 HI and Pin 2 LO—Pin 7 HI; Pin 9 HI.

(3) Pin 14 LO and Pin 2 HI—Pin 7 HI; Pin 9 LO.

(4) Pin 14 LO and Pin 2 LO—Pin 7 HI; Pin 9 follows the DTCSC (dual trace channel switch control) signal at pin 10 from the Digitizer Board.

NOTE

These conditions are for the shaded portion marked U72 of Figure 2-16A. The entire Plug-in Binary stage is discussed in reference to the outputs of this smaller block.

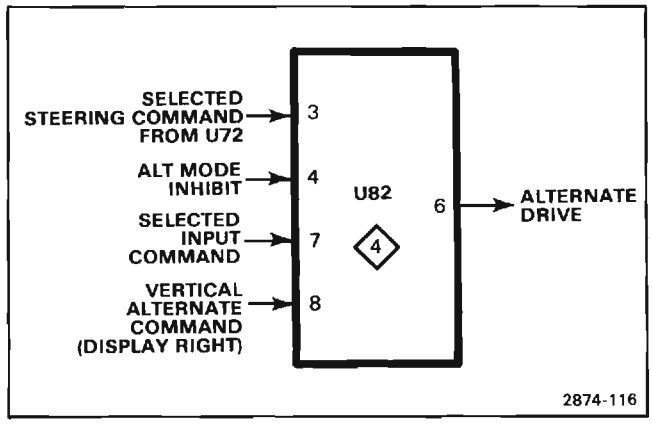

Figure 2-15. Input and output pins for the plug-in binary IC (U82).

http://manoman.sqhill.com

A

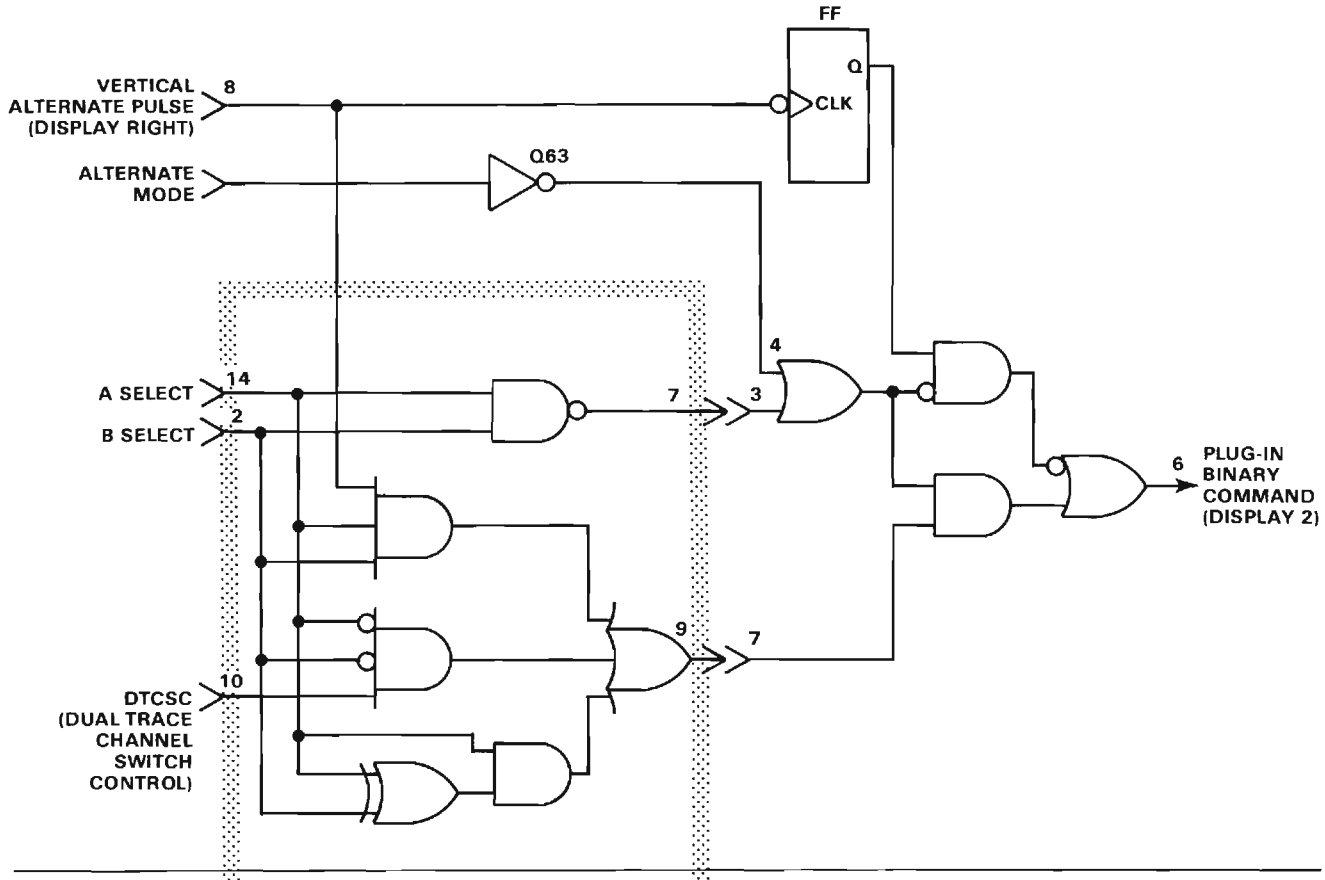

B

U72 INPUT/OUTPUT

SIGNAL AT INPUT A	SIGNAL AT INPUT B	SIGNAL AT PIN 7	SIGNAL AT PIN 9	MODE NAME
H	H	L	VERT ALT	A
H	L	H	H	B
L	H	H	L	C
L	L	H	DTCSC	D

PLUG-IN BINARY STAGE

MODE	OUTPUT (PIN 6)
A	*FOLLOWS DISPLAY RIGHT
B	HI (CHANNEL 2)
C	LO (CHANNEL 1)
D	FOLLOWS DTCSC

*IF ALTERNATE MODE COMMAND IS LO, 1/2 DISPLAY RIGHT RATE IF IT IS HI.

2874-117

Figure 2-16. (A) Logic diagram for Plug-in Binary stage; (B) Input/output tables for U72 and entire stage.

http://manoman.sqhill.com

The following discusses the operation of the Plug-in Binary stage in each of the four modes mentioned above.

When the plug-in Alternate Drive command level is HI and a dual trace amplifier plug-in unit is set for Alternate operation, Channel 2 of the dual trace unit is displayed. When the plug-in Alternate Drive command is LO, Channel 1 is displayed. The repetition rate of the plug-in Alternate Drive command is determined by the setting of the VERTICAL MODE switch and a control signal from the digitizer circuitry. This is true for each of the four modes.

Mode A

When Pins 14 and 2 of U72 are HI, the following is true.

For all positions of the VERTICAL MODE switch except ALT, the plug-in Alternate Drive command is the same as the Display Right command originating at pin 6 of U52 (Vertical Binary stage). Since the Display Right command is derived from the Display B command through the Vertical Binary stage, the two channels of a dual-trace vertical amplifier unit may be slaved to the time-base units (nondelayed, dual-sweep horizontal modes only) in the same manner as previously described for independent-pairs operation between the vertical and time-base units. The resultant crt presentation, when the dual-trace vertical amplifier unit is set for alternate operation, displays the Channel 1 trace at the sweep rate of the B time-base unit and the Channel 2 trace at the sweep rate of the A time-base unit.

The plug-in Alternate Drive command switches from HI to LO as the Display B command from the Horizontal Binary stage switches from LO to HI, and vice versa.

When the VERTICAL MODE switch is set to ALT, the output, pin 6, of the Vertical Binary stage switches the vertical display between the two vertical units. However, if either of the vertical plug-in units are dual-trace units, they can be operated in the alternate mode also. To provide a switching command to these units, the Plug-In Binary stage produces an output signal with a repetition rate that is one-half the repetition rate of the signal at pin 6 of U82. The sequence of operation, when two dual-trace vertical units are installed in the vertical plug-in compartments and they are both set for alternate operation, is as follows (VERTICAL MODE and HORIZONTAL MODE switches set to ALT): (1) Channel 1 of LEFT VERT unit displayed at sweep rate of B time-base unit; (2) Channel 1 of RIGHT VERT unit displayed at sweep rate of A time-base unit; (3) Channel 2 of LEFT VERT unit displayed at sweep rate of B time-base unit; (4) Channel 2 of RIGHT VERT unit displayed at sweep rate of A time-base unit. Notice that under these conditions, both channels of the LEFT VERT unit are displayed at the B-sweep rate and that both channels of the RIGHT VERT unit are displayed at the A-sweep rate. Input conditions when the VERTICAL MODE switch is set to ALT are:

Pin 4 LO; VERTICAL MODE switch set to ALT; and

Pin 8 HI or LO; plug-in Alternate Drive command signal changes state at HI to LO transition of the Display Right command signal.

Mode B

When U72's Pin 14 is HI and its pin 2 is LO, the output of U82 is HI. This causes Channel 2 of the dual-trace vertical units to be displayed.

Mode C

When U72's Pin 14 is LO and its pin 2 is HI, the output of U82 is LO. This causes Channel 1 of the dual-trace vertical unit to be displayed.

Mode D

When both pins 14 and 2 of U72 are LO, the output of U82 follows the Dual Trace Channel Switch Control signal from the digitizer circuitry.

CLOCK GENERATOR

Part of integrated circuit U12 along with the external components shown in Figure 2-17A make up the Clock Generator stage. R1, Q1, Q2 and Q3 represent an equivalent circuit within U12. This circuit along with discrete components C8, R8, R9 and R11 compose a two-megahertz free-running oscillator to provide a timing (clock) signal used to synchronize the vertical, horizontal and plug-in chopping modes.

This stage operates as follows: Assume that Q2 is conducting and Q1 is off. The collector current of Q2 produces a voltage drop across R1 to turn off Q1. This negative level at the collector of Q2 is also connected to pin 14 through Q3 (see waveforms in Figure 2-17B at

http://manoman.sqhill.com

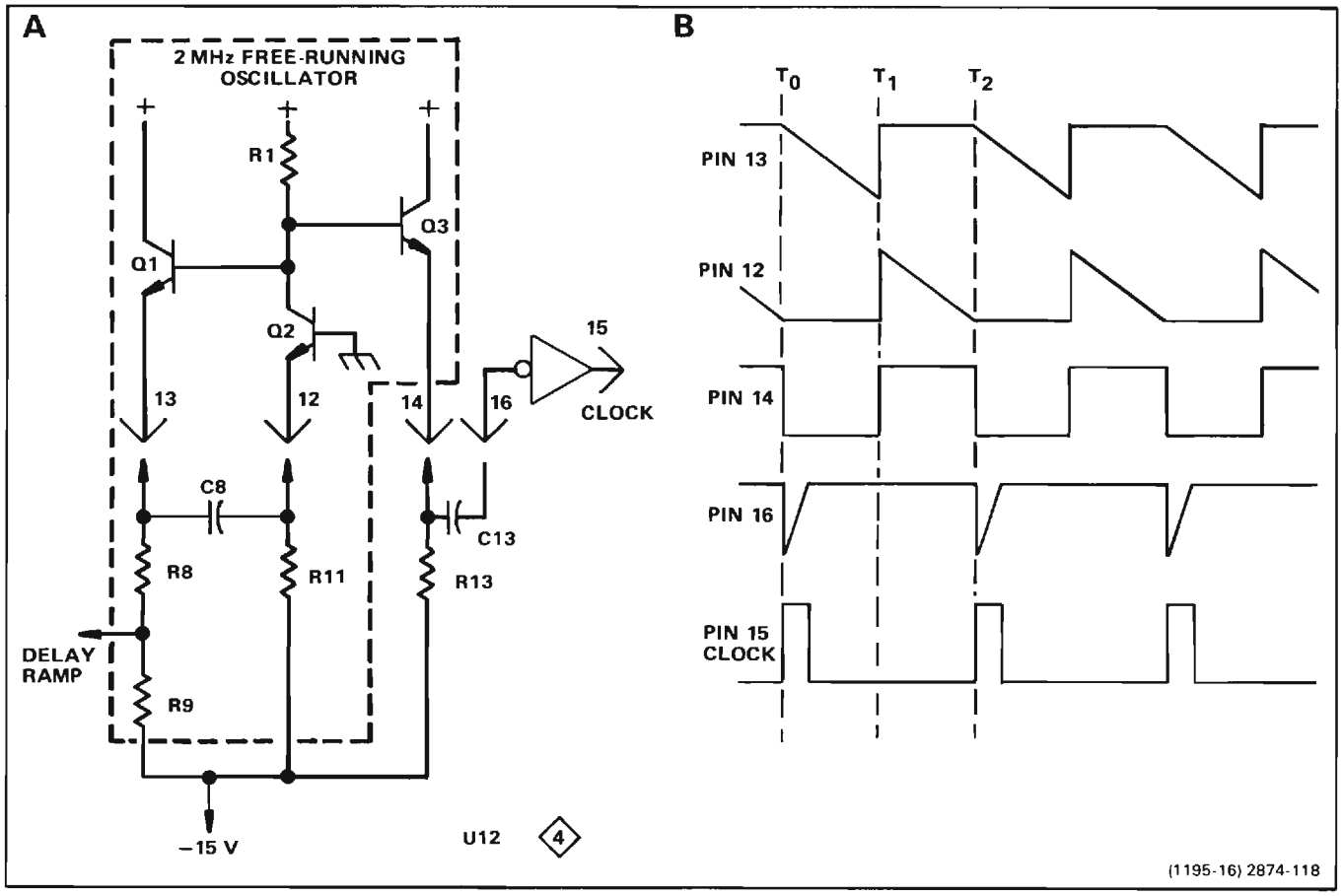

Figure 2-17. (A) Diagram of clock generator stage; (B) idealized waveforms for clock.

time T_0). Since there is no current through Q1, C8 begins to charge towards −15 volts through R8 and R9. The emitter of Q1 goes negative as C8 charges, until it reaches a level about 0.6 volts more negative than the level at its base. Then Q1 is forward biased and its emitter rapidly rises positive (see time T_1 on waveforms). Since C8 cannot change its charge instantaneously, the sudden change in voltage at the emitter of Q1 pulls the emitter of Q2 positive. With Q2 reverse biased, its collector rises positive to produce a positive output level at pin 14.

Now, conditions are reversed. Since Q2 is reverse biased, no current flows through it. Therefore, C8 begins to discharge through R11. The emitter level of Q2 follows the discharge of C8, until it reaches a level of about 0.6 volt more negative than its base. Then Q2 is forward biased and its collector drops negative to reverse bias Q1. The level at pin 14 drops negative also, to complete the cycle. Once again, C8 begins to charge through R8 and R9 to start the second cycle.

Two outputs are provided from this oscillator. The Delay Ramp signal from the junction of R8 and R9 is connected to the Vertical Chopped Blanking stage. This signal has the same waveshape as shown by the waveform at pin 13; its slope is determined by the divider ratio between R8 and R9. A wide pulse train output is provided at pin 14. The frequency of this pulse train is determined by the overall rc relationship between C8, R8, R9 and R11. Its duty cycle is determined by the ratio of R8 and R9 to R11.

The pulse train at pin 14 is connected to pin 16 through C13. Capacitor C13, along with the internal resistance of U12, differentiates the pulse train at pin 14 to produce a narrow negative-going pulse coincident with the falling edge of the pulse train (positive-going pulse coincident with rising edge has no effect on circuit operation). This negative-going pulse is connected to pin 15 through an inverter-shaper circuit that is also part of U12. The output at pin 15 is a positive-going clock pulse with a repetition rate of about two megahertz.

http://manoman.sqhill.com

VERTICAL CHOPPED BLANKING

The Vertical Chopped Blanking stage is made up of the remainder of U12. This stage determines if Vertical Chopped Blanking pulses are required, based upon the operating mode of the vertical system or the plug-in units (dual-trace units only). Vertical Chopped Blanking pulses are produced if: (1) The VERTICAL MODE switch is set to CHOP; (2) A dual-trace vertical unit is operating in the chopped mode and that unit is being displayed. The repetition rate of the negative-going Vert Chop Blank pulse at output pin 4 is two megahertz for all of the above conditions as determined by the Clock Generator stage. Figure 2-18 shows the logic diagram and the input/output combinations for the Vertical Chopped Blanking stage.

A

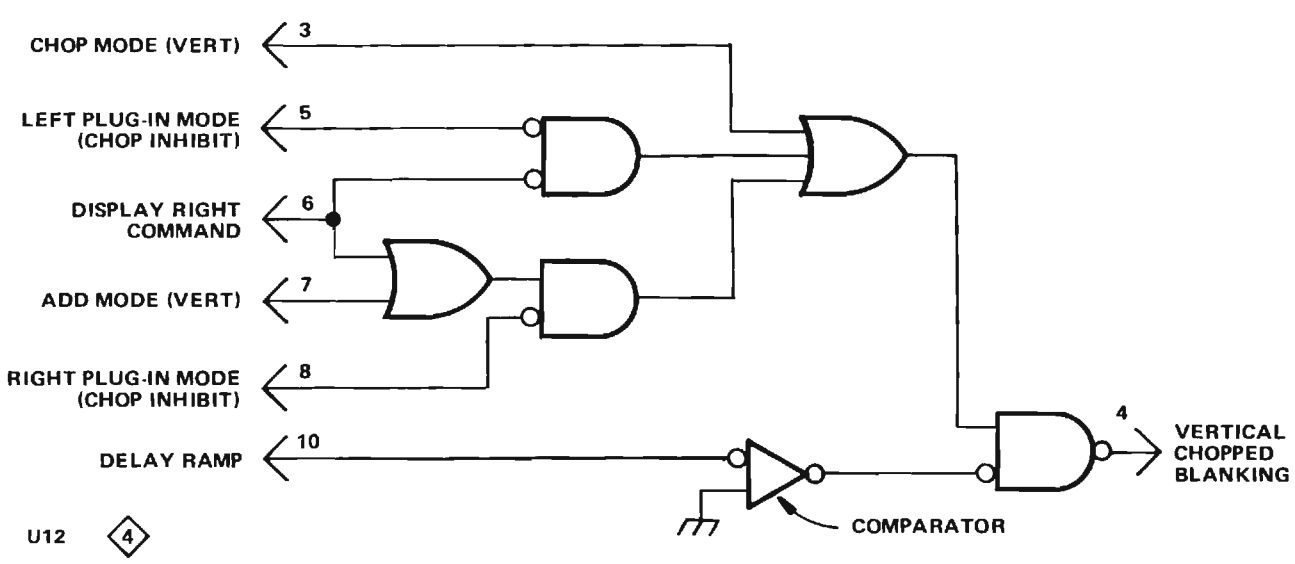

B

INPUT						OUTPUT	
CHOP MODE (VERT)	LEFT PLUG-IN MODE (CHOP INHIBIT)	DISPLAY RIGHT COMMAND	ADD MODE (VERT)	RIGHT PLUG-IN MODE (CHOP INHIBIT)	DELAY RAMP	VERTICAL CHOPPED BLANKING	
3	5	6	7	8	10[1]	4[2]	CONDITIONS
HI	Φ	Φ	LO	Φ	LO	LO	CHOP MODE (VERT)
LO	LO	LO	LO	Φ	LO	LO	LEFT PLUG-IN CHOPPED
LO	Φ	HI	LO	LO	LO	LO	RIGHT PLUG-IN CHOPPED
LO	LO[3]	LO	HI	LO[3]	LO	LO	ADD MODE, LEFT OR RIGHT PLUG-IN CHOPPED
ALL OTHER COMBINATIONS						HI	NO VERTICAL CHOPPED BLANKING PULSES AT OUTPUT

Φ = HAS NO EFFECT IN THIS CASE

[1] RAMP SIGNAL; CONSIDERED LO WHEN MORE NEGATIVE THAN ABOUT ZERO VOLTS.

[2] NEGATIVE-GOING PULSE AT TWO MEGAHERTZ RATE.

[3] PIN 5 CAN BE HI AND NOT AFFECT OPERATION IF PIN 8 IS LO, AND VICE VERSA.

(1195-17) 2874-119

Figure 2-18. (A) Logic diagram for Vertical Chopped Blanking stage; (B) Table of input/output combinations.

http://manoman.sqhill.com

The Delay Ramp signal from the Clock Generator stage determines the repetition rate and pulse width of the Vert Chop Blank pulses. The Delay Ramp applied to pin 10 starts to go negative from a level of about +1.1 volts coincident with the leading edge of the Clock pulse (see waveforms in Figure 2-19). This results in a HI quiescent condition for the Vert Chop Blank pulse. The slope of the negative-going Delay Ramp is determined by the Clock Generator stage. As it reaches a level slightly negative with respect to ground, the Vert Chop Blank output level changes to the LO state and remains LO until the Delay Ramp goes HI again.

Notice the delay between the leading edge of the Clock pulse generated by U12, and the leading edge of the Vert Chop Blank pulses. The amount of delay between the leading edges of these pulses is determined by the Delay Ramp applied to pin 10. This delay is necessary due to the delay line in the vertical deflection system. Otherwise, the trace blanking resulting from the Vert Chop Blank pulse would not coincide with the switching between the displayed traces. The duty cycle of the wide pulse train produced in the Clock Generator stage determines the pulse width of the vertical chopped blanking pulses (see Clock Generator description for more information).

CHOP COUNTER

The Chop Counter stage U22 produces the Vert Chop signal, the Plug-In Chop Drive command, and the Horiz Chop Blank signal. The Clock pulse produced by the Clock Generator stage provides the timing signal for this stage.

The functions of the input and output pins for the Chop Counter IC, U22, are identified in Figure 2-20A. Idealized waveforms showing the timing relationship between the input and output signals for this stage are shown in Figure 2-20B.

The repetition rate of the output signals from this stage is determined by the setting of the HORIZONTAL MODE switch. When the HORIZONTAL MODE switch is set to any position except CHOP, the repetition rate of the Vert Chop signal at output pin 1 is one megahertz (one-half Clock rate). This determines the switching between the LEFT and RIGHT VERT units when the VERTICAL MODE switch is set to CHOP. At the same time, the repetition rate of the Plug-In Chop Drive at pin 8 is 0.5 megahertz (one-fourth Clock rate). This provides a chopping signal to dual-trace vertical units to provide switching between the two channels. The relationship between these output signals and the Clock input is shown by the waveforms in Figure 2-20B in the area between T_0 and T_1. During this time, the Horiz Chop Blank at pin 4 remains HI.

When the HORIZONTAL MODE switch is set to CHOP, the basic repetition rate of the Vert Chop signal and the Plug-In Chop Drive is altered. For example, if the HORIZONTAL MODE switch is changed to the CHOP position at time T_1 (see Figure 2-20B), a HI level is applied to pin 6. This stage continues to produce outputs at pins 1 and 8 in the normal manner until both outputs are at their HI level. (See time T_2; this condition only occurs once every fifth Clock pulse and only when the HORIZONTAL MODE switch is set to CHOP.) When both of these outputs are at their HI level, the next Clock pulse switches both outputs LO, and at the same time switches Horiz Chop Blank to the LO level.

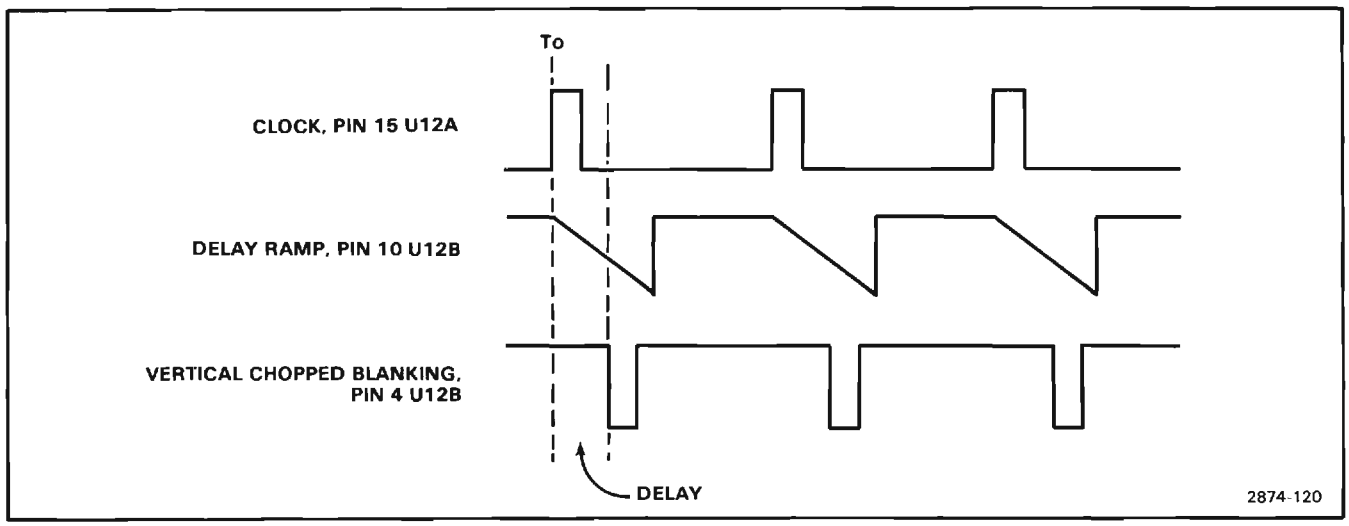

Figure 2-19. Idealized waveforms for Vertical Chopped Blanking stage.

http://manoman.sqhill.com

This change at time T_2 does not appear at pin 4 immediately, due to a delay network in the circuit. The delay is necessary to make the Horiz Chop Blank signal coincide with the Vert Chop Blank produced by U12 and the switching between the displayed signals. (Compare bottom two waveforms of Figure 2-20B; also see Vertical Chopped Blanking for further information.) After the delay time, the output level at pin 4 goes LO where it remains for about 0.5 microsecond; this is equal to the period of the Clock pulse (two-megahertz repetition rate).

The horizontal chopped blanking time must be longer than the vertical chopped blanking time, since it takes more time for the display to switch between horizontal units than between vertical units. During the time that the level at pin 4 is LO, the crt is blanked and the Vert Chop signal and the Plug-In Chop Drive cannot change levels. The Clock pulse at T_3 changes only the Horiz Chop Blank output at pin 4. The level on this pin goes HI after the delay time to unblank the crt.

For the next three Clock pulses, the Vert Chop signal output and Plug-In Chop Drive operate in the normal manner. However, just prior to the fourth Clock pulse (time T_4), both outputs are again at their HI level. The fourth clock pulse at T_4 switches the output at pin 1, pin 8 and pin 4 (after delay) to the LO level to start the next cycle. Notice that a Horiz Chop Blank pulse is produced at pin 4 with every fifth Clock pulse. Also notice that with the HORIZONTAL MODE switch set to CHOP, two complete cycles of the Vert Chop signal are produced with each five Clock pulses (repetition rate two-fifths Clock rate) and one complete cycle of the Plug-In Chop Drive for every five clock pulses (one-fifth clock rate). Notice that the large shaded area produced by the Horizontal Chopped Blanking pulse (see Figure 2-20B) is not part of the display time (crt display blanked). However, about the same time segment is displayed from the vertical signal source with or without horizontal chopped blanking, due to the change in repetition rate when in the CHOP horizontal mode.

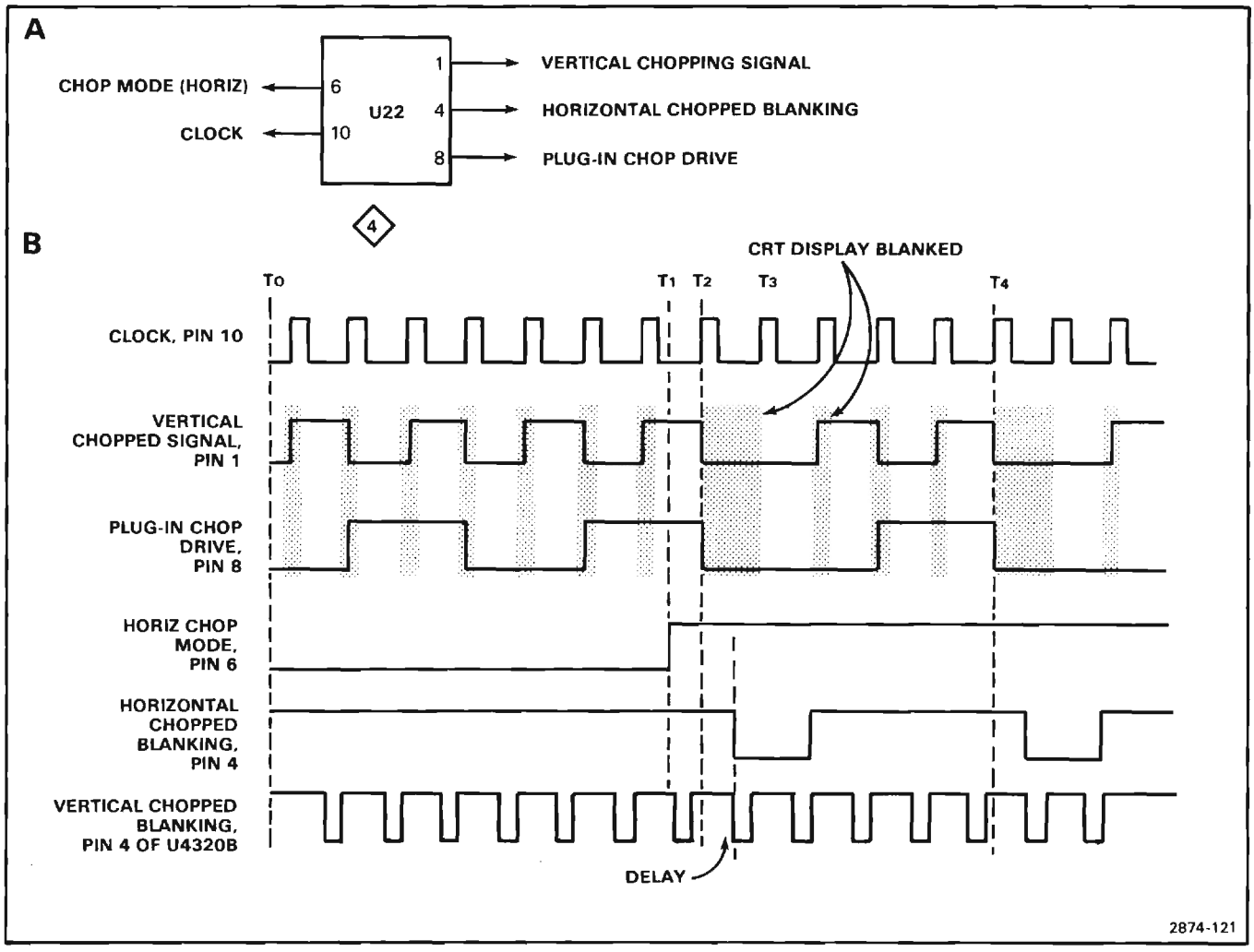

Figure 2-20. (A) Input and output pins for Chop counter IC (U22); (B) Idealized waveforms for Chop Counter stage.

http://manoman.sqhill.com

The Vert Chop signal at pin 1 of U22 is connected to the Vertical Mode Logic stage (see following description) through L26 and R26. This signal is HI when the RIGHT VERT unit is to be displayed and it is LO when the LEFT VERT unit is to be displayed. The Plug-In Chop command at pin 8 is connected to the plug-in units in the vertical compartments through L29 and R29, via the Main Interface board. When this signal is HI, Channel 2 of the plug-in units can be displayed; when this level is LO, Channel 1 can be displayed. The Horiz Chop Blank signal at pin 4 is connected through L35 and R35 to the Horizontal Binary stage U42, and to the Z-Axis Logic stage U190 by way of Q103. When this signal is HI, the crt is unblanked to display the selected signal. When it is LO, the crt is blanked to allow switching between the horizontal units.

Figure 2-21 shows a logic diagram of the Chop Counter stage.

VERTICAL MODE LOGIC

The Vertical Mode Logic stage is made up of discrete components CR17-CR16, CR62-CR61 and buffer Q77-Q79. These components develop the Display Right signal, which is connected to the Main Interface, Vertical Interface, and Trigger Selector circuits to indicate which vertical unit is to be displayed. When this output level is HI, the RIGHT VERT unit is displayed; when it is LO, the LEFT VERT unit is displayed.

The VERTICAL MODE switch shown on diagram 2 provides control levels to this stage. This switch provides a HI level on only one of five output lines to indicate the selected vertical mode; the remaining lines are LO. Notice that only four of the lines from the VERTICAL MODE switch are connected to the Mainframe Logic circuit. Operation of this stage is as follows: When the VERTICAL MODE switch is set to RIGHT, a HI level is connected to the base of Q77 through R16. This forward biases Q77, and the positive-going level at its emitter is connected to the emitter of Q79. The collector of Q79 goes HI to indicate that the RIGHT VERT unit is to be displayed. For the CHOP position of the VERTICAL MODE switch, a HI level is applied to the anodes of CR17 and CR16 through R17. Both diodes are forward biased so that the Vert Chop signal from pin 1 of U22 can pass to the base of Q77. This signal switches between the HI and LO levels at a one-megahertz rate and produces a corresponding Display Right command output at the collector of Q79. When the Display Right signal is HI, the RIGHT VERT unit is displayed and when it switches to LO, the LEFT VERT unit is displayed.

In the ALT position of the VERTICAL MODE switch, a HI level is applied to the anodes of CR62 and CR61 through R62. These diodes are forward biased so the Display Right command, originating at pin 6 of the Vertical Binary stage, can pass to the base of Q77 to determine the vertical operating mode. The Display Right command switches between its HI and LO levels at a rate determined by the Vertical Binary stage.

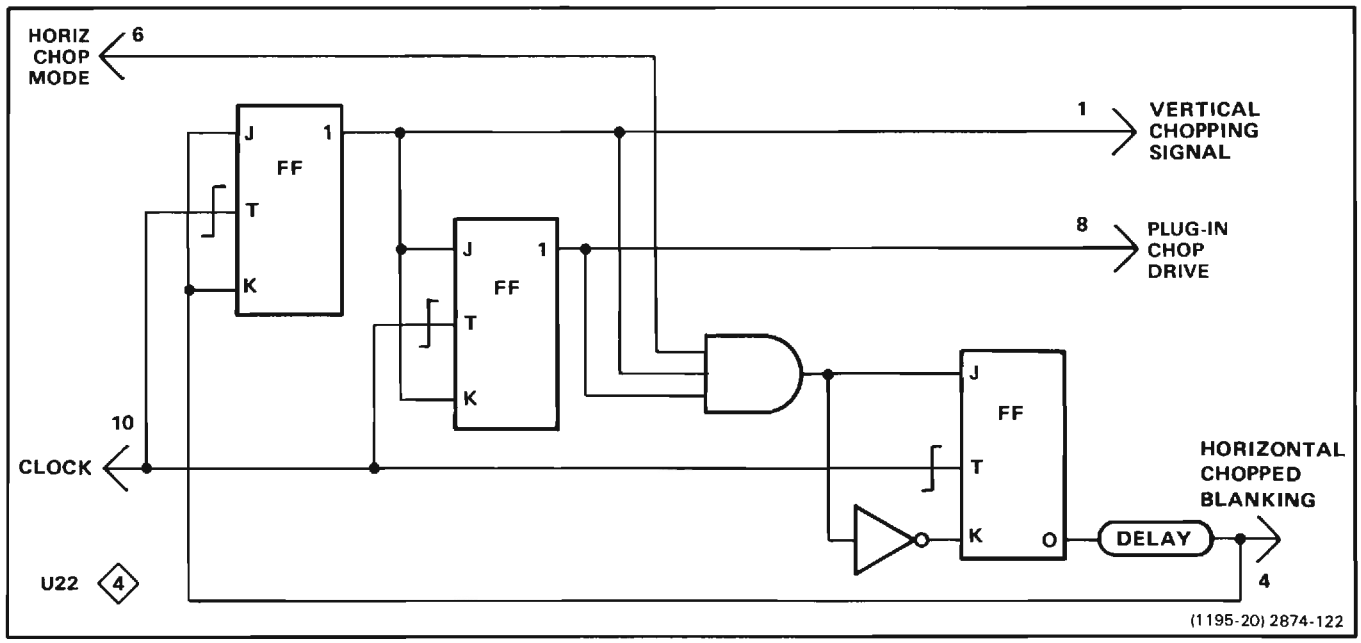

Figure 2-21. Logic diagram of Chop Counter stage.

http://manoman.sqhill.com

The control levels in the LEFT and ADD positions of the VERTICAL MODE switch are not connected to this stage. However, since only the line corresponding to the selected vertical mode can be HI, the RIGHT, CHOP and ALT lines must remain at their LO level when either LEFT or ADD are selected. Therefore, the base of Q77 remains LO to produce a LO Display Right output level at the collector of Q79.

A logic diagram of the Vertical Mode Logic stage is shown in Figure 2-22. The discrete components that make up each logic function are identified.

TRACE SEPARATION

The Trace Separation stage is made up of discrete components Q136, Q141, Q142, and Q146. This stage produces the trace separation output level to the Aux Y input of the Vertical Amplifier circuit (diagram 9) to offset the B sweep display when operated in a dual-sweep mode (horizontal). The level of this output current is determined by the setting of the VERT TRACE SEPARATION (B) control. The current from the VERT TRACE SEPARATION (B) control is switched so that the Aux Y Axis output is provided only when the B sweep is being displayed in the ALT or CHOP horizontal modes and not when the B sweep only is being displayed, nor for independent-pairs operation (sweep-slaving).

The VERT TRACE SEPARATION (B) control provides current to the Aux Y-Axis output through R147 and Q146 when Q146 is forward biased. When the B sweep is being displayed (for ALT or CHOP horizontal operation), the Display B command at the base of Q141 is HI. This forward biases Q141 causing its collector to go negative, forward biasing Q142. This causes Q142 to saturate and its collector goes positive to forward bias Q146. During the time the A sweep is being displayed, the Display B command is LO. This reverse biases Q141 and Q142. At this time, Q146 is reverse biased and the VERT TRACE SEPARATION (B) control is disconnected while the A sweep is being displayed.

When the HORIZONTAL MODE switch is set to B (only), a HI level is connected to the emitter of Q141 through R138. This reverse biases Q141 (even though the Display B command at its base is HI for this mode). Therefore, the VERT TRACE SEPARATION (B) control has no effect. When the VERTICAL MODE switch is set to ALT and the Delay Mode Control level from the A time-base unit is LO (indicating nondelayed sweep operation), a HI level is applied to the emitter of Q141 through R137 and CR137. This HI level reverse biases Q141 (even though the Display B command is HI). This action disconnects the VERT TRACE SEPARATION (B) control for independent-pairs operation so that the vertical position of the B sweep display is determined by the slaved LEFT VERT plug-in unit only. If delayed-sweep operation is selected, the Delay Mode Control level is HI to forward bias Q136 and Q141. This allows the VERT TRACE SEPARATION (B) control to position the B sweep display, since independent-pairs operation is not possible when operating in a delayed-sweep mode.

A logic diagram of the Trace Separation stage is shown in Figure 2-23A. The discrete components which make up each logic function are identified. An input/output table for this stage is given in Figure 2-23B.

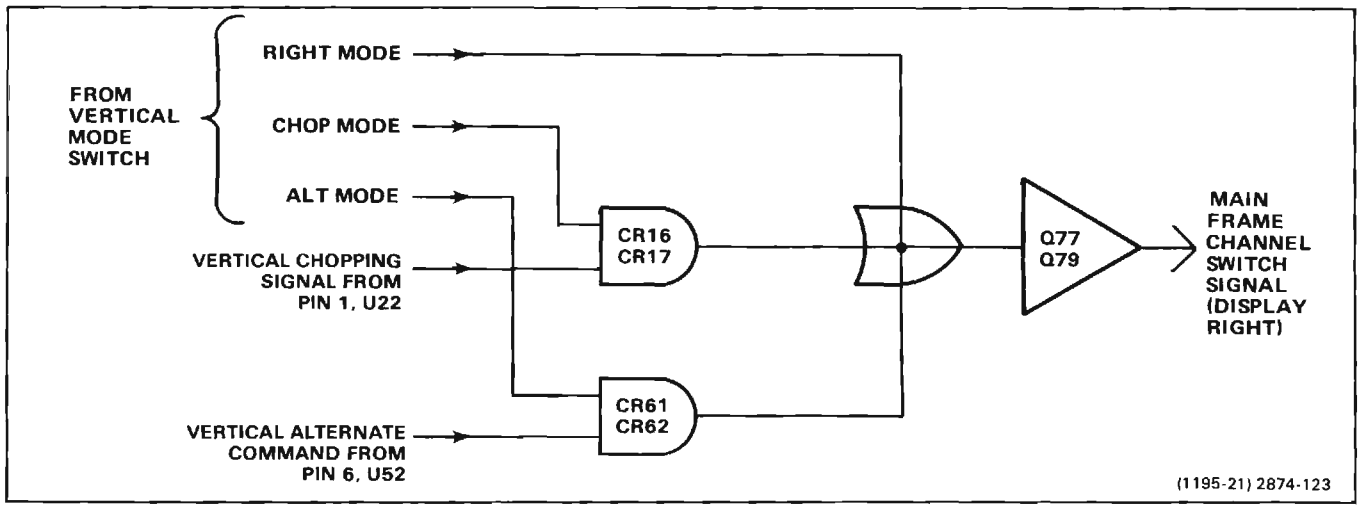

Figure 2-22. Logic diagram of Vertical Mode Logic stage.

http://manoman.sqhill.com

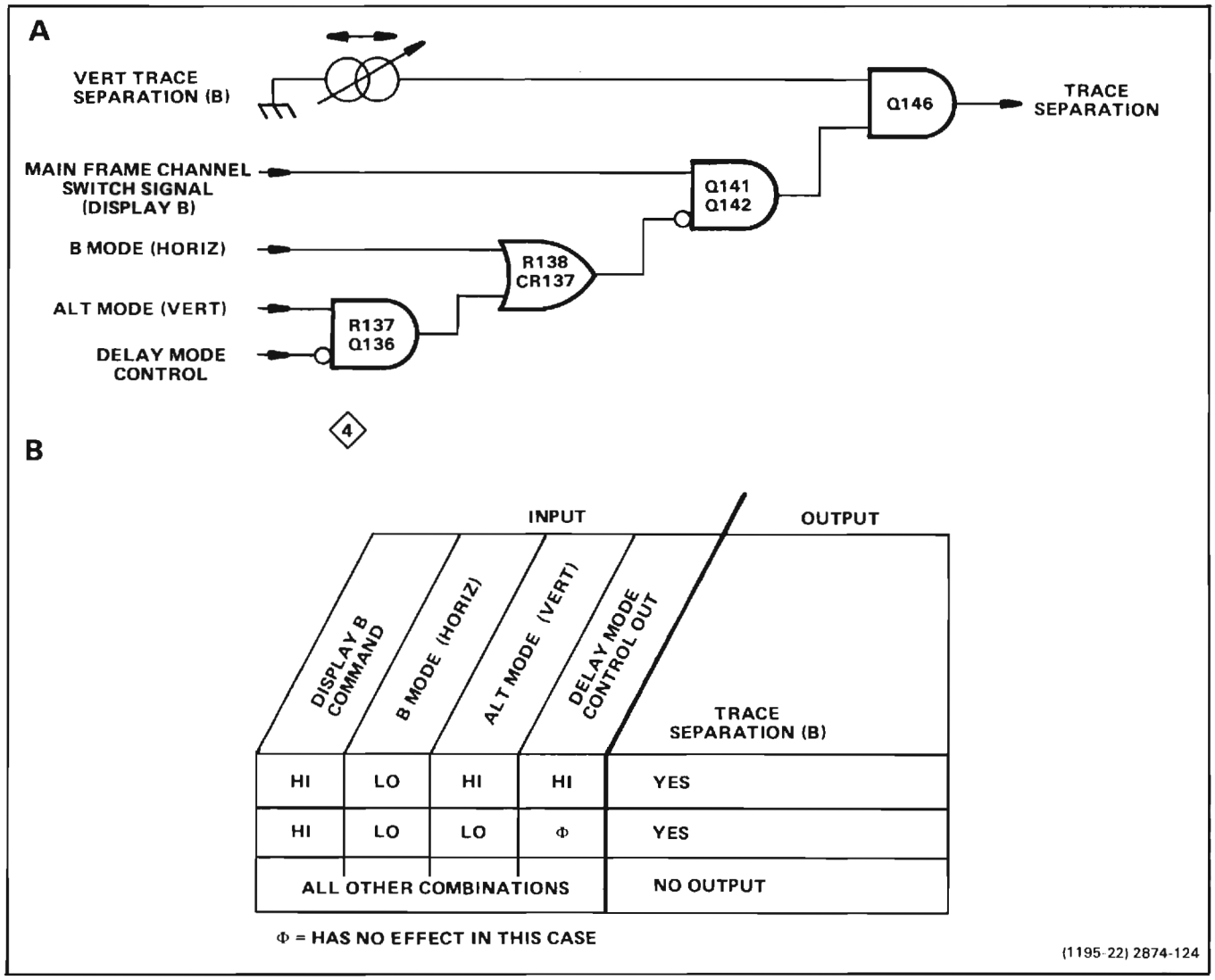

Figure 2-23. (A) Logic diagram of Trace Separation stage; (B) Table of input/output combinations.

5

A TRIGGER SELECTOR

The A Trigger Selector circuit determines the source of the internal triggering signals connected to the A HORIZ plug-in compartment. Figure 2-24 shows a detailed block diagram of the A Trigger Selector circuit. A schematic of the A Trigger Selector circuit is shown on diagram 5, in Section 7, Diagrams and Circuit Board Illustrations. The schematic is divided by gray shaded lines separating the circuitry into major stages. Sub-headings in the following discussion use these stage names to aid in locating and identifying the components and portions of the circuitry described.

A TRIGGER CHANNEL SWITCH

The A Trigger Channel Switch stage provides control signals for the Left and Right Trigger Preamplifier stages. The front-panel A TRIGGER SOURCE switch (S352) provides the control signals to operate the A Trigger Channel Switch. When the A TRIGGER SOURCE is set to LEFT, the A Trigger Channel Switch allows the Left Trigger Preamplifier to pass trigger signals from the LEFT VERT plug-in compartment to the A Trigger Output Amplifier. When the A TRIGGER SOURCE switch is set to RIGHT, the A Trigger Channel Switch allows the Right Trigger Preamplifier to pass trigger signals from the RIGHT VERT plug-in compartment to the A Trigger Output Amplifier. When the A TRIGGER SOURCE switch is set to VERT MODE, the A Trigger Channel Switch

http://manoman.sqhill.com

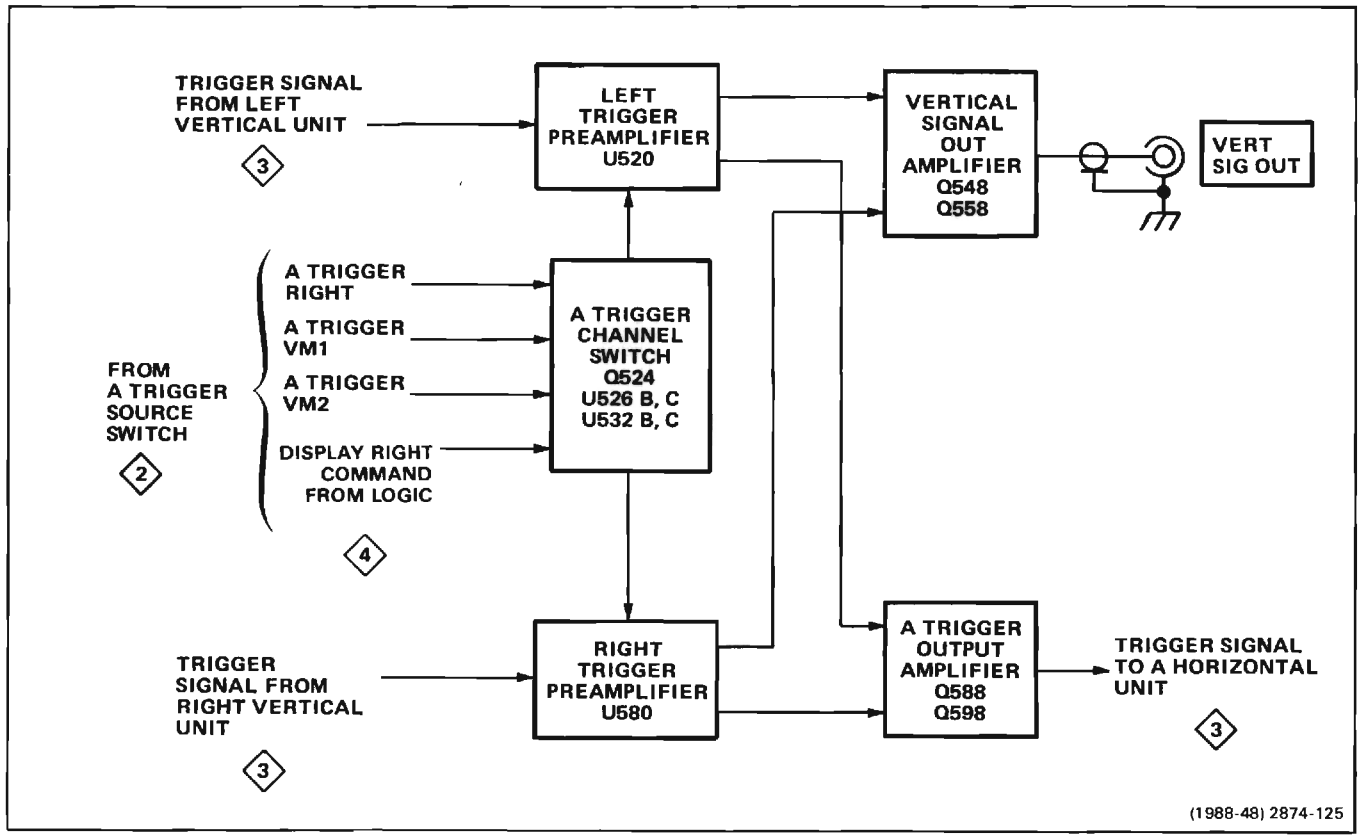

Figure 2-24. Detailed block diagram of the A Trigger Selector circuit.

allows the Left and Right Trigger Preamplifier stages to pass trigger signals from the LEFT and RIGHT VERT plug-in compartments to the A Trigger Output Amplifier.

Table 2-2 shows the input and output conditions of the A Trigger Channel Switch, for each combination of the A TRIGGER SOURCE switch and VERTICAL MODE switch. Notice that only the A TRIGGER SOURCE switch controls the output to U520 and U580 when in the LEFT or RIGHT VERT positions. Also, notice that the VERTICAL MODE switch determines the output when the A TRIGGER SOURCE switch is in the VERT MODE position.

LEFT AND RIGHT TRIGGER PREAMPLIFIERS

The operation of the Left and Right Trigger Preamplifier stages is similar, therefore only a discussion of the Left Trigger Preamplifier is given.

The Left Trigger Preamplifier, U520, operates as a switching amplifier. Trigger signals from the LEFT VERT compartment are connected to the input pins 1 and 13 of U520. The logic levels applied to pins 11 and 12 determine if the trigger signal is coupled from the input to the output (pins 9 and 5) or is terminated within the stage. Table 2-2 shows the logic level combinations applied to pins 11 and 12 of both U520 and U580, with all combinations of the A TRIGGER SOURCE switch and the VERTICAL MODE switch. When pin 12 is HI and pin 11 is LO, trigger signals are coupled through the stage. When pin 12 is LO and pin 11 is HI, signals are terminated within the stage.

A TRIGGER OUTPUT AMPLIFIER

The A Trigger Output Amplifier provides the internal trigger signal to the A HORIZ compartment. Transistors Q588 and Q598 are connected as a push-pull amplifier. The DC Center adjustment R586 balances the emitter current of Q588 and Q598 for equal dc output levels. Gain adjustment R589 sets the emitter degeneration of Q588 and Q598 to adjust the gain of the A Trigger Output Amplifier. Components R596 and C596 are

http://manoman.sqhill.com

selected for optimum amplifier bandwidth. The output impedance of this stage is 100 ohms differentially, determined primarily by R584 and R594.

VERTICAL SIGNAL OUT AMPLIFIER

The Vertical Signal Out Amplifier provides the signal to the VERT SIG OUT connector, located on the rear panel. Transistors Q548 and Q558 are connected as a push-pull to single-phase converter. The DC Center adjustment, R547, sets the emitter currents of Q548 and Q558 which determines the quiescent dc output voltage at J548. The source of the output signal is determined by the A TRIGGER SOURCE switch and the VERTICAL MODE switch as shown in Table 2-2.



B TRIGGER SELECTOR

The B Trigger Selector circuit determines the source of the internal triggering signals connected to the B HORIZ plug-in compartment. Figure 2-25 shows a detailed block diagram of the B Trigger Selector circuit. A schematic of the B Trigger Selector circuit is shown on diagram 6, in Section 7, Diagrams and Circuit Board Illustrations. The schematic is divided by gray shaded lines separating the circuitry into major stages. Sub-headings in the following discussion use these stage names to aid in locating and identifying the components and portions of the circuitry described.

TABLE 2-2
Input/Output Combinations for A Trigger Channel Switch

A TRIGGER SOURCE Switch Positions	VERTICAL MODE Switch Positions	Display Right Command (HI=1 V, LO=-0.5V)	A Trigger			A Trigger Channel Switch Output to U520 and U580			
			Right (HI=5 V, LO=GND	VM1 (HI=4.4 V, LO=-0.6 V)	VM2 (Hi=4.4 V, LO=-0.6 V)	U520		U580	
						Pin 11	Pin 12	Pin 11	Pin 12
LEFT VERT	Φ[1]	Φ[1]	LO	Open	Open	LO	HI	HI	LO
RIGHT VERT	Φ[1]	Φ[1]	HI	Open	Open	HI	LO	LO	HI
VERT MODE	LEFT	LO	LO	LO	LO	LO	HI	HI	LO
	ALT	ALT[2]	LO	HI	LO	ALT[2]	ALT[2]	ALT[2]	ALT[2]
	ADD	Φ[1]	LO	LO	HI	LO	HI	LO	HI
	CHOP	Φ[1]	LO	LO	HI	LO	HI	LO	HI
	RIGHT	HI	LO	HI	LO	HI	LO	LO	HI

[1] Φ—Has no effect in this case.
[2] Switches between HI and LO at a rate determined by the sweep speed of time-base unit(s) installed in the horizontal compartment(s).

http://manoman.sqhill.com

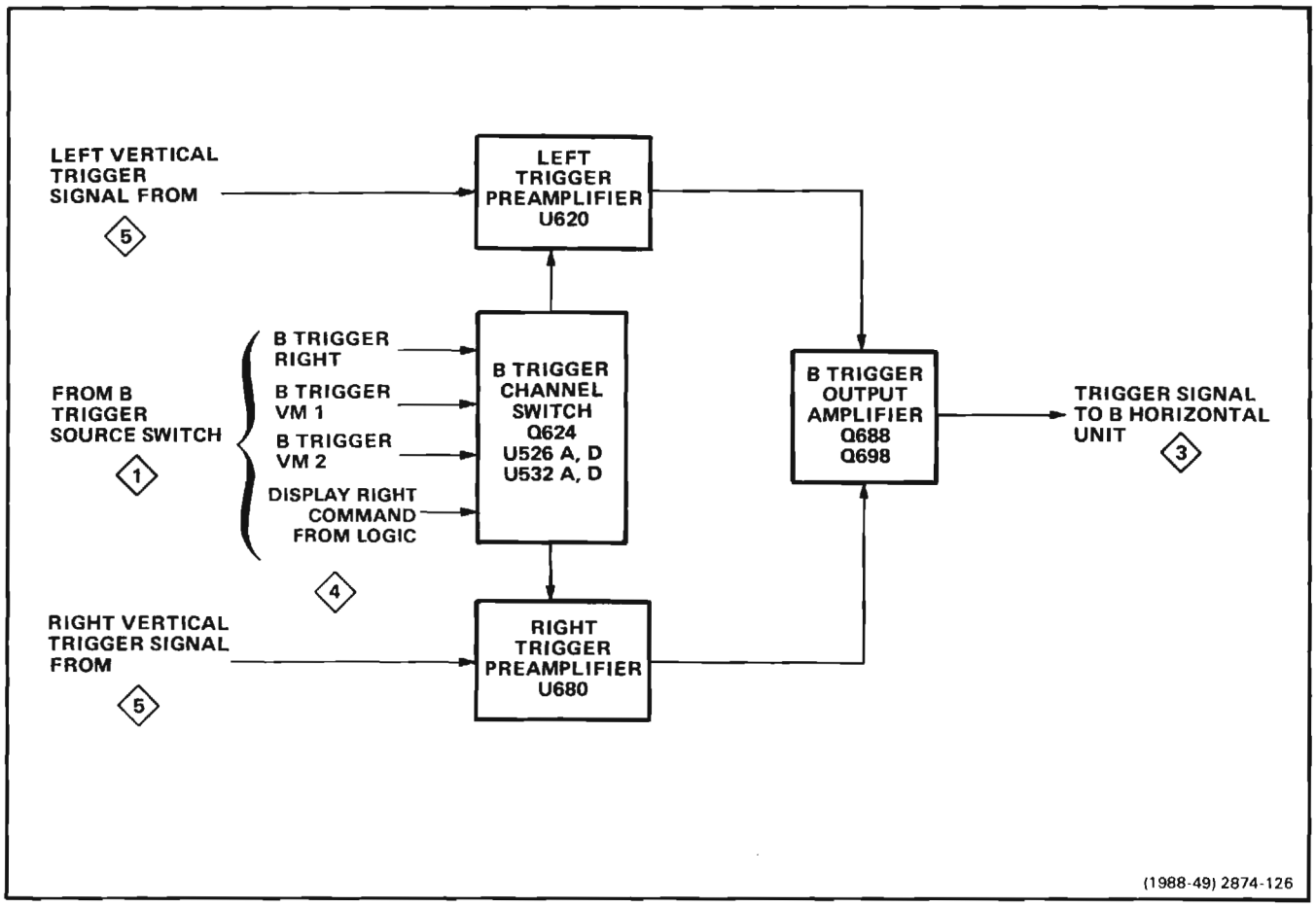

Figure 2-25. Detailed block diagram of the B Trigger Selector circuit.

B TRIGGER CHANNEL SWITCH

The B Trigger Channel Switch provides control signals for the Left and Right Trigger Preamplifier stages. The front-panel B TRIGGER SOURCE switch (S110) provides the control signals to operate the B Trigger Channel Switch. When the B TRIGGER SOURCE is set to LEFT, the B Trigger Channel switch allows the Left Trigger Preamplifier to pass trigger signals from the LEFT VERT plug-in compartment to the B Trigger Output Amplifier. When the B TRIGGER SOURCE switch is set to RIGHT, the B Trigger Channel Switch allows the Right Trigger Preamplifier to pass trigger signals from the RIGHT VERT plug-in compartment to the B Trigger Output Amplifier. When the B TRIGGER SOURCE switch is set to VERT MODE, the B Trigger Channel Switch allows the Left and Right Trigger Preamplifier stages to pass trigger signals from the LEFT and RIGHT VERT plug-in compartments to the B Trigger Output Amplifier.

Table 2-3 shows the input and output conditions of the B Trigger Channel Switch, for each combination of the B TRIGGER SOURCE switch and the VERTICAL MODE switch. Notice that only the B TRIGGER SOURCE switch controls the output to U620 and U680 when in the LEFT or RIGHT VERT positions. Also, notice that the VERTICAL MODE switch determines the output when the B TRIGGER SOURCE switch is in the VERT MODE position.

LEFT AND RIGHT TRIGGER PREAMPLIFIERS

The operation of the Left and Right Trigger Preamplifier stages is similar, therefore, only a discussion of the Left Trigger Preamplifier is given.

http://manoman.sqhill.com

The Left Trigger Preamplifier, U620, operates as a switching amplifier. Trigger signals from the LEFT VERT compartment are connected to the input pins 1 and 13 of U620. The logic levels applied to pins 11 and 12 determine if the trigger signal is coupled from the input to the output (pins 9 and 5) or is terminated within the stage. Table 2-3 shows the logic level combinations applied to pins 11 and 12 of both U620 and U680, with all combinations of the B TRIGGER SOURCE switch and the VERTICAL MODE SWITCH. When pin 12 is HI and pin 11 is LO, trigger signals are coupled through the stage. When pin 12 is LO and pin 11 is HI, trigger signals are terminated within the stage.

B TRIGGER OUTPUT AMPLIFIER

The B Trigger Output Amplifier provides the internal trigger signal to the B HORIZ compartment. Transistors Q688 and Q698 are connected as a push-pull amplifier. The DC Center adjustment R686 balances the emitter currents of Q688 and Q698 for equal dc output levels. Gain adjustment, R689, sets the emitter degeneration of Q688 and Q698 to adjust the gain of the B Trigger Output Amplifier. Components R696 and C696 are selected for optimum amplifier bandwidth. The output impedance of this stage is 100 ohms differentially, determined primarily by R684 and R694.

7 VERTICAL CHANNEL SWITCH

The Vertical Channel Switch circuit selects the vertical deflection signal from the output of the LEFT and/or RIGHT VERTical plug-in compartment(s) for display on the crt. The block diagram in Figure 2-26 shows how the various portions of the Vertical Amplifier circuitry relate to each other, of which the Vertical Channel Switch is a part.

A schematic diagram of the Vertical Channel Switch is given on Diagram 7, in section 7, Diagrams and Circuit Board Illustrations. The schematic is divided by gray shaded lines separating the circuitry into major stages. These stages aid in locating components mentioned here. Sub-headings in the following discussion use the stage names to further identify portions of the circuitry on diagram 7.

TABLE 2-3
Input/Output Combinations for B Trigger Channel Switch

B TRIGGER SOURCE Switch Positions	VERTICAL MODE Switch Positions	Display Right Command (HI=1 V, LO=-0.5 V)	B Trigger			B Trigger Channel Switch Output to U620 and U680			
			Right (HI=5 V, LO=GND)	VM1 (HI=4.4 V, LO=-0.6 V)	VM2 (HI=4.4 V, LO=-0.6 V)	U620		U680	
						Pin 11	Pin 12	Pin 11	Pin 12
LEFT VERT	Φ[1]	Φ[1]	LO	Open	Open	LO	HI	HI	LO
RIGHT VERT	Φ[1]	Φ[1]	HI	Open	Open	HI	LO	LO	HI
VERT MODE	LEFT	LO	LO	LO	LO	LO	HI	HI	LO
	ALT	ALT[2]	LO	HI	LO	ALT[2]	ALT[2]	ALT[2]	ALT[2]
	ADD	Φ[1]	LO	LO	HI	LO	HI	LO	HI
	CHOP	Φ[1]	LO	LO	HI	LO	HI	LO	HI
	RIGHT	HI	LO	HI	LO	HI	LO	LO	HI

[1] Φ—Has no effect in this case.
[2] Switches between HI and LO at a rate determined by the sweep speed of time-base unit(s) installed in the horizontal compartment(s).

http://manoman.sqhill.com

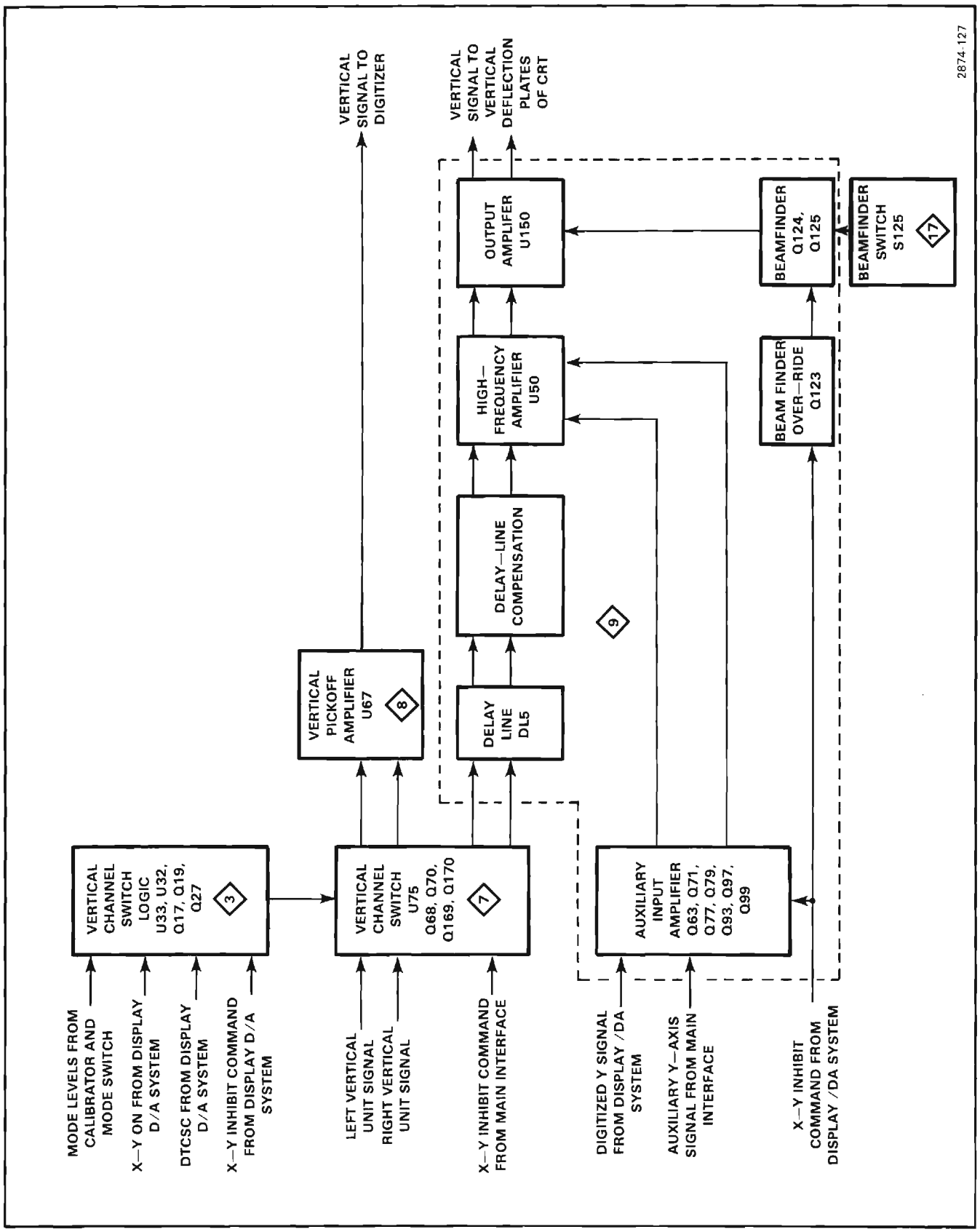

Figure 2-26. Vertical Amplifier detailed block diagram.

http://manoman.sqhill.com

CHANNEL SWITCH

The vertical deflection signals from the Left and Right vertical plug-in units are coupled through the stage as determined by the Vertical Channel Selector stage. The Channel Switch stage is made up primarily of hybrid circuit U75. Inputs 7 and 9 provide a differential input for the signal from the RIGHT VERT plug-in unit. Input pins 17 and 19 provide a differential input for the signal from the LEFT VERT plug-in unit. The output signal from the delay line to the Vertical Amplifier (diagram 9) at pins 12 and 13, and the vertical signal going to the Vertical Pickoff Amplifier (diagram 8) at pins 2 and 3 are differential signals, which are connected to J90, J89, J194 and J193 respectively. Differential input signals from the RIGHT and LEFT VERT plug-ins may be routed to either of the two differential outputs of U75. One output goes to the Vertical Amplifier circuitry (pins 12 and 13) while the other is provided to drive the Vertical Pickoff Amplifier circuitry (pins 2 and 3). Figure 2-27 demonstrates signal distribution by the Vertical Channel Switch. Output signal selecting is dependent upon signals received and developed by the Vertical Channel Selector stage which will be discussed later in this section.

OUTPUT VOLTAGE REGULATORS

Transistors Q179, Q186, Q187, Q188 and their associated components compose a voltage regulator circuit that supplies standing current to a portion of U75 and maintains the output common-mode dc level to the Vertical Pickoff Amplifier at +5.2 volts for all Vertical Channel Switch modes. The common-mode level at pins 2 and 3 of U75 is sensed by Q188 through R191 and R192 and compared with a reference level of +5.2 volts determined by R182 and R183. Assume, for example, that the base voltage of Q188 is lower than that at the base of Q186, indicating an average output level below +5.2 volts. The collector of Q186 will be driven LO, turning on Q187, which turns on Q179. This makes pin 3 more positive which raises the output common-mode level at pins 2 and 3. These outputs continue in the positive direction until the average voltage level sensed by Q188 through R191 and R192 is equal to the reference voltage on the base of Q186. This is the balanced condition.

Transistors Q79, Q86, Q87, Q88 and their associated components compose a voltage regulator circuit referenced at +5.8 volts, supplying standing current to a

A

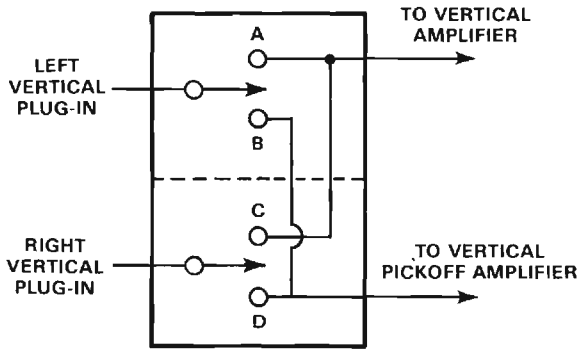

B

LEFT SIGNAL SWITCH TO POSITION	RIGHT SIGNAL SWITCH TO POSITION	SIGNAL AT VERTICAL AMPLIFIER OUTPUT	SIGNAL AT VERTICAL PICKOFF AMPLIFIER OUTPUT
A	C	L+R	OFF
A	D	L	R
B	C	R	L
B	D	OFF	L+R

2874-128

Figure 2-27. (A) Functional diagram of Vertical Channel Switch; (B) Table showing signal distribution by the Vertical Channel Switch.

http://manoman.sqhill.com

portion of U75 and maintaining the common-mode dc level to the Vertical Amplifier at +5.8 volts. Operation of this regulator is identical to the regulator described above.

CR94 and CR95 between output jacks J90 and J89 act an an attenuation network for high-frequency signals that pass through the Vertical Channel Switch to the Vertical Amplifier output due to small stray capacitances coupling through the device. During normal display of a waveform, CR94 and CR95 are reverse biased by the voltage divider established by R94 and R95, and do not affect the signal. When no signal is desired at J90 and J89, the X-Y Inhibit signal at the base of Q99 goes HI, pulling its collector LO to about +2 volts. This turns on both CR94 and CR95, essentially shorting J90 and J89 together. All signals are attenuated.

High-frequency compensation of signals going to the Vertical Pickoff Amplifier is provided by the adjustable rc network, R195 and C195.

VERTICAL CHANNEL SELECTOR

The Vertical Channel Selector interfaces the logic signals arriving from the Main Interface (diagram 3) to the Channel Switch, U75. The Vertical Channel Switch requires two pairs of complementing control voltages; one pair for each channel. The HI control voltage is +2.7 volts, and the complementing LO voltage is +2.0 volts. To select a channel, the HI level must be applied to the ON input (pin 20 for left, pin 10 for right) and the LO level must appear at the OFF input (pin 1 for left, pin 11 for right). To inhibit a channel, the control voltages should be reversed. Operation of both halves of the Vertical Channel Selector are identical. Therefore, only the operation of the right Vertical Channel Selector will be discussed.

The pair of complimentary control voltages applied to pins 10 and 11 of U75 are developed by the emitter coupled pair transistors Q69 and Q70, from a single ended logic signal (Display Right) from the Main Interface.

The base of Q70 is referenced at about +0.5 volt by resistors R72 and R73. If, for example, the Display Right command connected to the base of Q69, through R66, should go LO (about +0.2 volt), the voltage divider R66 and R67 causes the base of Q69 to go to about +0.07 volt. Since the base of Q70 is referenced at +0.5 volt and the emitters of both Q70 and Q69 are at approximately -0.2 volt (0.7 volt lower) Q69 is cut off and Q70 is conducting. The collector of Q69 goes HI, approaching the +2.8 volts supply voltage. The voltage level at pin 10 of U75 (the collector of Q70) goes to about +2 volts, a level primarily determined by emitter resistor R71 and the collector load R70. When the Display Right command connected to the base of Q69 through R66 goes HI (to about +3.4 volts), the voltage divider R66 and R67 causes the base of Q69 to go to +1.1 volts which pulls its emitter and the emitter of Q70 to +0.4 volt. This turns Q69 on and cuts off Q70. The voltage at pin 10 of U75 (the collector of Q70) goes HI, approaching the +2.8 volts supply voltage, while the voltage level at pin 11 of U75 (the collector of Q69) goes to about +2 volts. This level is primarily determined by R71 and R69 and the impedance of U75A at pin 11.

The controlling logic for the Vertical Channel Selector (Display Left and Display Right commands) is on the Main Interface board (diagram 3).

RIGHT AND LEFT CHANNEL FEEDBESIDE

The operation of the Right and Left Channel Feedbeside stages are identical. Therefore, only a discussion of the Right Channel Feedbeside is given.

The function of the Feedbeside stage is to compensate for low-frequency imperfections in the frequency response of the Channel Switch stage, U75. Self heating of the transistor base-emitter junctions in some transistors within U75 causes the low-frequency gain to appear larger than the midband gain. To correct this, a portion of the input signal is picked off through R6 and R9 and applied to U11. This differential signal is converted to a single-ended signal and distributed into five rc (resistive-capacitive) networks, each having a different time constant. Variable components R25, R33, R37, R42, R45 and C50 are adjusted to provide an accumulated waveform. This waveform is converted to a differential signal by U50, Q59, and Q60, and is then injected into U75 through pins 6 and 4, where it is subtracted from the signal entering U75 at pins 7 and 9. Proper adjustment results in flat-frequency response and optimum-transient response at the output pins 12 and 13.

SECONDARY SUPPLY REGULATORS

Transistors Q233, Q243 and their associated components make up simple voltage regulators to drop existing regulated supplies to voltages required by circuitry on the Vertical Channel Switch Board. Each transistor acts as an emitter follower with output voltages determined by the voltage divider resistors at each base.

http://manoman.sqhill.com

8

VERTICAL PICKOFF AMPLIFIER

The Vertical Pickoff Amplifier and its related circuitry provide amplification of the push-pull signals from the Vertical Channel Switch (diagram 7) and convert them to the single-ended signal required to drive the vertical portion of the digitizer circuitry. The schematic diagram of the Vertical Pickoff Amplifier is given on diagram 8, in Section 7, Diagrams and Circuit Board Illustrations. The schematic is divided by gray shaded lines separating the circuitry into major stages. Sub-headings in the following discussion use these stage names to aid in locating and identifying the components and portions of the circuitry described.

PICKOFF AMPLIFIER

The Pickoff Amplifier, made up primarily of U65, accepts the push-pull signals from the Vertical Channel Switch (diagram 7) at its input pins 4 and 10. The push-pull outputs of U65 at pins 2 and 8 are converted to a single-ended signal and pass through Q105 to the digitizer circuitry. Transistor Q125 sets the quiescent collector voltage of the output transistor at pin 8 of U65 while Q115 provides biasing and drift compensation for the transistors within U65. Transistor Q105 provides a path for low-frequency signals between pin 2 of U65 and the Sampling Bridge stage of the Vertical and Horizontal Sampler (diagram 20) via the delay line. Transistor Q104 effectively causes all signal current at the emitter node of Q105 to pass through that transistor (approximately 100% signal transfer) by injecting a current into the signal path (at the emitter of Q105) equal to the signal current lost through Q105's base-emitter junction. Capacitor C105 provides a signal path for moderate and high-frequency signals. The rc networks between pins 5 and 6, 11 and 12 and pins 5 and 11 provide compensation for the amplifier at various frequencies as determined by their time constants. Resistors R43 and R63 are selected to set amplifier gain.

Operational amplifier U21 provides proper emitter current for transistors within U65 by sensing the average emitter voltages at pins 6 and 12 of U65 (through R19 and R20) and comparing it to its reference voltage set by R21 and R22.

VOLTAGE/CURRENT REGULATOR

Active devices U73A, U73B, Q93, Q94 and their associated components compose a Voltage/Current Regulator to maintain signal integrity independent of small changes in supply voltages. Any change in current through Q94 develops a change in voltage across R91. This voltage change, tied to pin 6 of U73B, is referenced to the voltage at pin 5 of U73B set by the Center adjustment, R80. Since any voltage difference between pin 6 and the reference voltage at pin 5 of U73B is amplified and inverted by U73B, the voltage at the base of Q93, and thus at its emitter, is forced to follow in the same direction. The current at its emitter is greatly multiplied and applied to the base of Q94. This current change at the base of Q94 causes a corresponding (but multiplied) change in current at its emitter until the preset current is flowing through R91. This is the balanced condition and any subsequent change in current causes this regulation process to occur again.

U73A is connected as a feedback amplifier referenced to ground through R72. Resistor R71, tied to pin 2 of U73A, allows the amplifier to sense any change in the −5 volts supply voltage, and transmit a correction signal to the current regulator (U73B, Q93 and Q94) through R77.

9

VERTICAL AMPLIFIER

The Vertical Amplifier circuit provides final amplification for the vertical signals from the vertical plug-ins before it is applied to the vertical deflection plates of the crt. The Vertical Amplifier also accepts inputs from the Display D/A and Amplifier circuit (diagram 34) to produce the vertical portion of the stored waveforms and the alphanumeric display. An input is provided for the BEAMFINDER switch to compress an over-scanned display within the viewing area of the crt. In addition, the Vertical Amplifier accepts the A Y Axis (Aux Y) input signal from the Main interface circuit. Figure 2-26 shows a block diagram of the Vertical Amplifier circuit and a schematic is provided on diagram 9 in Section 7, Diagrams and Circuit Board Illustrations. The schematic is divided by gray lines separating the circuitry into major stages. Sub-headings in the following discussion use these stage names to aid in locating and identifying the components and portions of the circuitry discussed.

DELAY LINE

Delay Line DL5 provides approximately 65 nanoseconds of delay (for the vertical signal) to allow the horizontal circuits time to initiate a sweep before the vertical signal reaches the vertical deflection plates of the crt. This allows the instrument to display the leading edge of the signal originating the trigger pulse when using internal triggering. The delay line used in this instrument has a characteristic impedance of 100 ohms differentially. It is of the coaxial type that does not produce preshoot or phase distortion in the crt display.

http://manoman.sqhill.com

AUXILIARY INPUT AMPLIFIER

The Auxiliary Input Amplifier controls the bias current to the High-Frequency Amplifier stage and thus the centering for the Output Amplifier stage. This stage also provides for Display D/A and auxiliary (Aux Y) inputs to the Main Vertical Amplifier circuit.

Auxiliary Y-axis (Aux Y) signals are connected to the base of Q93. Transistors Q93 and Q71 are connected as a paraphase amplifier to convert the single-ended input to a push-pull output to drive Q77 and Q97. The X-Y Inhibit command from the Display D/A circuit goes HI when stored waveform or alphanumeric character information is to be displayed. This HI level turns on Q63. The emitter of Q63 goes HI to turn off Q93 and Q71, thus blocking any auxiliary Y-axis signals. During the display of stored waveforms or alphanumeric characters, bias current to Q77 and Q97 is supplied through R65, R68 and R88. The display RO-WFM Ctr (readout-waveform centering) adjustment, R65, balances this bias current to adjust the vertical position of the stored waveform and alphanumeric portion of the crt display. The Vert Ctr (vertical centering) adjustment, R105, balances the quiescent dc levels in this stage so the trace is displayed at the center of the crt when the inputs to the High-Frequency Amplifier stage are at the same potential.

The signal at the collectors of Q77 and Q97 is applied to the bases of Q79 and Q99 through R77 and R97. For the display of stored waveforms or alphanumeric characters, the RO-WFM Y signal from the Display D/A and Amplifier system is connected to the base of Q77 through R81 and R75. Since the signal from the vertical plug-in unit is blocked in the Vertical Channel Switch circuit (diagram 7), the RO-WFM Y signal provides the only vertical deflection. This signal is connected to the base of Q77 and results in a differential signal at the collectors of Q79 and Q99. This differential signal is applied to the bias inputs of U50 in the High-Frequency Amplifier stage and provides readout deflection.

HIGH-FREQUENCY AMPLIFIER

The High-Frequency Amplifier stage, consisting primarily of integrated circuit U50, provides a 50-ohm input impedance (100 ohms differentially) to permit accurate delay-line termination. The components connecting the input signal to U50 provide forward termination and compensation for the delay line. Components R18 and C18 provide adjustable high-frequency compensation. The internal circuitry of U50 is represented on diagram 9. Terminals to the emitters of the input transistors of U50 at pins 5-6 and 11-12 permit the quiescent operating conditions of the stage to be set by discrete components. Resistors R41 and R48 set the quiescent operating level; resistors R43 and R47 are selected to accurately set the gain of the differential channels. These emitter inputs also provide a means of injecting the output of the Auxiliary Input Amplifier stage. The Vertical Gain adjustment R160, sensitor RT133, R133 and R163 set the resistance between the output terminals of U50 to control the current gain of this stage. This adjustment sets the overall gain of the main Vertical Amplifier circuit; the sensitor provides thermal compensation.

OUTPUT AMPLIFIER

The Output Amplifier stage, consisting primarily of integrated circuit U150, provides final amplification for the vertical signal to drive the crt vertical deflection plates. A representation of the internal circuitry of U150

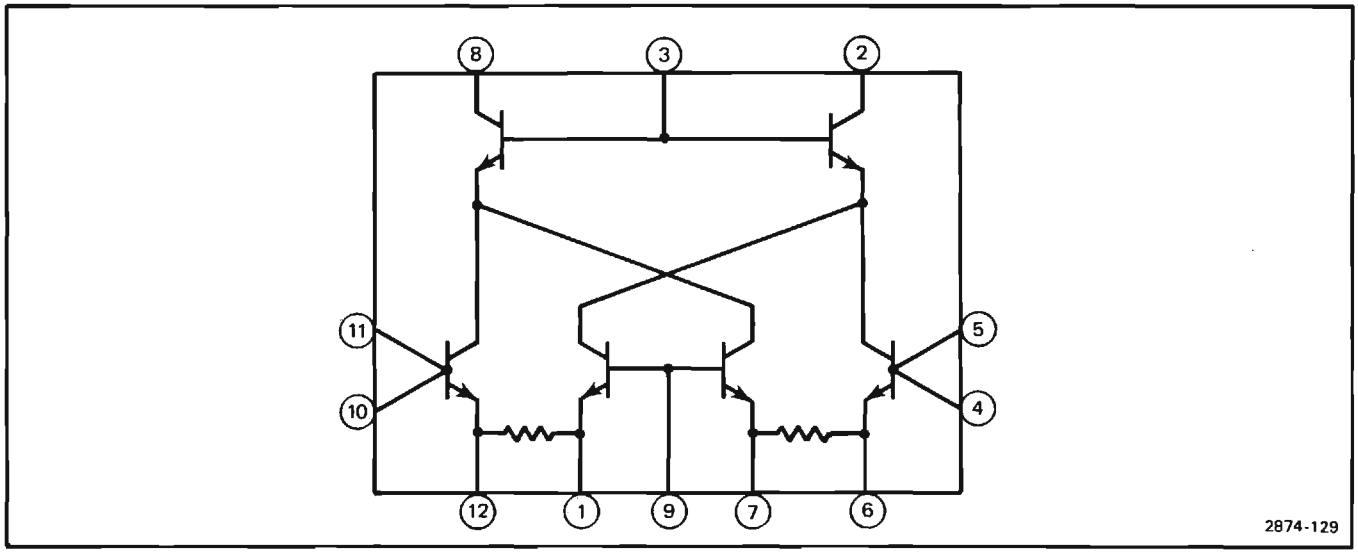

Figure 2-28. U150 internal circuitry representation.

http://manoman.sqhill.com

is shown in Figure 2-28. Terminals to the emitters of the input transistors at pins 1-12 and 6-7 allow the use of discrete components to establish the quiescent operating characteristics of this stage. Resistors R143 and R173 are selected to accurately set the gain of the differential channels. R136, R137, R167, R166 and R126 set the operating level of this stage. The series rc networks in parallel with R143 and R173 provide frequency compensation for uniform gain at all frequencies within the bandpass of this instrument.

The signal at the output collectors of U150 is connected directly to the vertical deflection plates of the crt. A distributed deflection plate system is used in this instrument for maximum frequency response and sensitivity. The signal at the output of U150 is connected to the deflection-plate structure in the crt and then to termination network L81, R81, R83A, L82, R82, and R83B. As the signal passes through the deflection-plate structure in the crt, its velocity is essentially the same as the velocity of the electron beam passing between the vertical deflection plates. This synchronism of the deflection signal and the electron beam reduces the loss in high-frequency sensitivity due to electron-transmit time through the deflection-plate structure.

OUTPUT PROTECTION

Transistors Q192 and Q196 compose a protection circuit for U150, in case the +15 volt supply is shorted to ground. If this occurs Q192 turns on causing the base of Q196 to drop below +35 volts. Thus, the emitter voltage of Q196 is kept at a safe level for U150.

BEAM FINDER/BEAM FINDER OVERRIDE

The BEAM FINDER switch, S69 (diagram 17), switches Q124 and Q125 to provide the beam-finder function. Normally, the emitter current for U150 is supplied from +5 volts through Q125 and R126. However, when S69 is actuated, Q124 is turned on. This turns off Q125 and the emitter current source for U150 is now through R127 and R126. This limits the dynamic range of this stage by limiting its current, so the display is compressed vertically within the graticule area.

The Beam Finder Override stage overrides the beam-finder function as determined by the X-Y Inhibit command from the display system. Quiescently, the X-Y Inhibit command is LO with Q123 and Q124 cut off. Transistor Q125 is saturated, providing normal emitter current to U150. When the BEAM FINDER switch is actuated, Q124 turns on which turns Q125 off. Resistor R127 then limits the current for the Output Amplifier. When stored waveform or alphanumeric character information is to be displayed, the X-Y Inhibit command goes HI to turn on Q123. The resultant LO on the collector of Q123 causes Q124 to turn off, which saturates Q125. The current necessary for full-range operation of U150 is supplied from +5 volts through Q125 during this time.

10

HORIZONTAL CHANNEL SWITCH AND PICKOFF AMPLIFIER

A schematic diagram of the Horizontal Channel Switch and Pickoff Amplifier is given on diagram 10, in Section 7, Diagrams and Circuit Board Illustrations. The schematic is divided by gray shaded lines separating the circuitry into major stages. Sub-headings in the following discussion use these stage names to aid in identifying the components mentioned here and individual portions of the circuitry on diagram 10.

HORIZONTAL CHANNEL SWITCH

The Horizontal Channel Switch stage is made up of U20 and its associated components. The horizontal signal going to the Horizontal Amplifier (diagram 11) at pins 12 and 13 of U20 is selected from the A plug-in signal at pins 2 and 15 of U20, or the B plug-in signal at pins 7 and 10 of U20, depending on the level of the Display B command as determined by U143 on the Main Interface board (diagram 3).

When the Display B Command at pin 4 of U20 is HI, the signal from the B plug-in is coupled to the output of U20. When the Display B Command is LO, the signal from the A plug-in is coupled to the output of U20. When the X-Y Inhibit command at pin 6 of U20 is LO, signals from the Horizontal plug-ins may be transferred to the Horizontal Channel Switch, U20, output as just described. If, however, the X-Y Inhibit command is HI, the Horizontal Channel Switch is disabled and no signals may be transferred through the device.

PICKOFF AMPLIFIER

The Pickoff Amplifier stage is made up of Q32, Q62, Q35, Q65, Q37, Q66, Q67 and their associated components. The Pickoff Amplifier converts the push-pull output signal of U20 to the single-ended signal required by the digitizer circuitry, providing gain at the same time.

Transistors Q32 and Q62, with the push-pull output signals from U20 applied to their bases through R32 and R62, provide input to the stage. Transistors Q35 and Q65 are connected to the collectors of Q32 and Q62 respectively in the cascode configuration to enhance the frequency response of the amplifier. Collector current of Q35 flows through R36, CR36, Q37, and R37 to −5 volts, developing a voltage drop across R37. The voltages at the base of Q37 and Q67, and thus the emitter of Q67, is

http://manoman.sqhill.com

dependent on the emitter current of Q37. Since R37 and R67 are the same value and the voltage across them is the same, the current flowing through Q67 and Q66 is equal to the current flowing in Q37. This current is added to the current flowing through Q65. Any change in current through Q37 shows up as an equal change in current through Q67 and Q66. Thus, the single-ended signal at the junction of the collectors of Q65 and Q66 contain components of both portions of the push-pull signal currents present at the collectors of Q35 and Q65. This signal is applied through delay line DL64 to the horizontal sampler circuit.

Variable resistor R45 is the dc Center adjustment and R42 sets the gain of the amplifier. The variable components R41, C41, R65 and C65 are high-frequency compensation adjustments.

X-Y DELAY COMPENSATION (OPTION 2)

The X-Y Delay Compensation network (Option 2 only) provides a delay for the horizontal (X) signal from the B HORIZ plug-in compartment to match the delay of the vertical (Y) signal due to the Delay Line stage (diagram 9). This circuit may or may not be activated depending on the type of plug-in in the B HORI compartment and the plug-in's mode.

The horizontal (X) signal from the A HORIZ plug-in compartment is coupled directly to the Horizontal Channel Switch, without a delay compensation network.

Time-Base Operation

When the plug-in unit installed in the B HORIZ compartment is operated as a standard time-base unit to produce a horizontal sweep for deflection of the crt beam, the B delay portion of the X-Y Compensation network is effectively disabled. The X-Y Compensation command, applied to pin BY is a HI and relays K822 and K838 are not actuated. Therefore, the relay contacts remain in the normally-closed position so the B horizontal signal passes directly through this network to the Horizontal Channel Switch stage.

X-Y Operation

If the time-base unit installed in the B HORIZ compartment is operated as an amplifier, or if an amplifier unit is installed in the B HORIZ compartment, the X-Y Compensation command to the B delay compensation network is held at ground. This actuates relays K822 and K838 to connect the X-Y Compensation network into the circuit. The B horizontal signal then passes through the X-Y Compensation Board, where the horizontal signal is delayed to match the vertical signal.

The (X-Y) Compensation network is an optional feature. For instruments which are not equipped with this feature, the B horizontal signal from the B HORIZ plug-in compartment is connected directly to the Horizontal Channel Switch through the Horizontal Interconnect Board.



HORIZONTAL AMPLIFIER

The schematic diagram of the Horizontal Amplifier is given on diagram 11, in Section 7, Diagrams and Circuit Board Illustrations. The schematic is divided by gray shaded lines separating the circuitry into major stages. Sub-headings in the following discussion use these stage names to aid in locating and identifying the components and circuitry described.

INPUT AMPLIFIER/BEAMFINDER

The horizontal signal from the Horizontal Channel Switch and Pickoff Amplifier circuit (diagram 10) is connected to the bases of Q21 and Q121 via R21 and R121. The gain of this stage is controlled by the resistive network between the emitters of Q21 and Q121. The horizontal Gain adjustment, R30, is variable to set overall gain. The horizontal Ctr (centering) adjustment R15 balances the base currents of Q21 and Q121 to horizontally center the display. The emitter current for this stage is normally supplied from the +15 volt supply through Q197. However, when the front-panel BEAMFINDER switch is actuated, the base of Q197 goes HI and the transistor is cut off. Emitter current to Q21 and Q121 is reduced, as it is now supplied through R133. This reduction of emitter current limits the dynamic range of Q21 and Q121. At the same time, current now flowing in R133 pulls the base of Q134 negative, turning the transistor on. The bias currents for Q41 and Q141 are maintained at nearly the same level, for, as the BEAMFINDER switch is actuated, the current through R134 and Q134 flows through R37 and R137 to compensate for the smaller currents through Q21 and Q121. The reduction of emitter current in Q21 and Q121 effectively reduces the gain of the horiontal system and reduces its dynamic range to keep the crt display within the horizontal limits of the graticule, regardless of the setting of positioning controls or signal amplitude.

The RO-WFM X (readout or waveform horizontal) signal input at JT2 is a single-ended input from the display D/A and Amplifier circuit and is the source of all digitized and alphanumeric display information coming onto the board. It is applied to the paraphase amplifier made up of Q3 and Q103 through R2 and is converted to a push-pull signal to drive Q41 and Q141 of the Driver Amplifiers and Active Peaking stage.

http://manoman.sqhill.com

DRIVER AMPLIFIERS AND ACTIVE PEAKING

The left and right Driver Amplifiers each consist of a single inverting transistor stage followed immediately by an Active Peaking network. Transistors Q41 and Q141 make up the left and right Driver Amplifier stages respectively. Both act as shunt feedback amplifiers, converting current signals at their bases to voltage signals of low impedance at their collectors.

The Active Peaking networks are composed of Q51, Q151 and their related components. The signal at the collector of Q141 is coupled through R143 to the bases of Q161 and Q162 of the Output Amplifier stage and to the base of Q151 of the right Active Peaking circuit. Transistor Q151 is connected as an emitter follower stage providing current gain, which is coupled through R154, C154, and C155 to the input of the right Output Amplifier stage. This differentiated signal current (differentiated by C154 and C155) is added to the dc coupled signal current passing through R143, providing the current necessary to charge the feedback capacitor, C166, when a fast transition occurs. The amount of differentiated signal current added to the dc signal may be adjusted by C155 to obtain best signal response.

Operation of the left Active Peaking circuit is identical to that described above for the right Active Peaking circuit. Transistor Q63, along with resistors R53, R55, R56 and R57; provide proper biasing of Q61 and Q62 with changes in temperature.

Capacitor C52 between the left and right Active Peaking circuits serves to somewhat balance the signal transfer characteristics of the separate circuits by providing a means for signal variations to be equally shared in both circuits. Lets assume, for example, that the signal at the bases of Q51 and Q151 were equal and opposite but the signal at the emitter of Q51 tended to rise in the positive direction faster than the signal at the emitter of Q151 went negative. This positive transition is reflected as a negative transition at the collector of Q51. This change is coupled through C52 to the collector and thus to the emitter of Q151. This coupling tends to speed up the slower signal and to slow down the faster signal, resulting in approximately equal and opposite signals at the emmitters of the transistors.

OUTPUT AMPLIFIERS

The right Output Amplifier consists of a current driven feedback amplifier. The common junction point at the bases of Q162 and Q161 is the input to the stage while the common junction point at the collectors of Q173 and Q169 is the output. Components R166 and C166 make up the feedback loop. Signals at the bases of Q162 and Q161 are amplified and inverted, and then pass through Q169 connected in the common base configuration to drive the Horiz (+) deflection plate of the crt. Signals coupled to Q173 through R171 and C171 are coupled to the output of the amplifier stage to provide additional output signal current at the Horiz (+) crt plate, enabling fast positive voltage transitions to take place.

Operation of the left Output Amplifier is the same as just described for the right Output Amplifier. Zener diode VR63 is added between the input transistors (Q61-Q62) and the output transistors (Q69-Q73) to maintain proper operating voltages within the input and output circuits.

The Limit Center adjustment, R160, provides a variable current to both left and right Output Amplifiers to more closely balance their operation.

Diodes CR160 and CR159 act to balance out quiescent voltage level differences between the left and right Output Amplifiers, due to using different polarity transistors at the inputs, and to ensure that the proper current will flow in R159 with changes in ambient temperature.

Zener diode VR79 and resistor R79 provide bias for Q73 and Q69 operating in the common base configuration. Potentiometer R33 is used to adjust the stability of the character readout display.

12 OUTPUT SIGNALS

The Output Signals circuit provides signals to the connectors located on the rear panel. These output signals are samples of signals from the associated plug-in units. In addition, this circuit contains the Single Sweep Reset input. A schematic of the Output Signals is given on diagram 12, of Section 7, Diagrams and Circuit Board Illustrations. The schematic is divided by gray shaded lines separating the circuitry into major stages. Sub-headings in the following discussion use these stage names to aid in locating and identifying the components and portions of the circuitry described.

SAWTOOTH AMPLIFIER

The sawtooth signals from the A and B time-base units are connected to the Sawtooth Amplifier stage through series resistors R163 and R164 respectively (see diagram 3). Sweep Selector switch S3 determines whether the A Sweep or the B Sweep sawtooth signal provides the ± SAWTOOTH OUT signal. The unused sawtooth signal is terminated by R3 to provide a constant load to the signal source.

Transistors Q10, Q11 and Q17 compose an inverting feedback amplifier. Gain of the stage is about two, as determined by the ratio of feedback resistor R16 to the input resistance (made up of R9 and either R163 or R164, depending on which sawtooth source is selected). The rc network, composed of R17-C17, provides frequency-response stabilization for this stage.

http://manoman.sqhill.com

Diode CR12 provides protection from high-amplitude positive voltages inadvertently connected to the output connector. This diode provides a current path to the +15 V supply through the collector-base junction of Q17. When the diode is forward biased, it clamps the base of Q17 at +15 volts. Diode CR19 provides protection from high-amplitude negative voltages at the ± SAWTOOTH OUT connector by clamping the output if it attempts to go more negative than about —15.6 volts.

GATE AMPLIFIER

The + GATE OUT signal is selected from three input gate signals by Gate Selector switch S46. In the A position, the Sweep Gate A signal from the A HORIZ compartment is connected to the base of emitter-follower Q62. The base of Q49 is connected to ground by S46 so the circuit operates as a common-base stage. Transistor Q62 provides a high-input impedance for the stage while the emitter coupling between the transistors provides temperature compensation. Operation is the same in the B position of the Gate Selector switch, except that the gate signal from the B HORIZ compartment provides the input signal.

In the Dly'd position, the Gate Selector switch connects the base of Q62 through R59 to ground and disconnects the A Gate and B Gate signals. The other section of the Gate Selector switch opens to allow the Delay Gate signal from the delaying time-base unit to reach the base of Q49. Transistor Q49 inverts this negative-going Delay Gate signal so that all three gate signals at the + GATE OUT connector are positive going.

Diode CR76 provides temperature compensation for Q77. Diode CR77 protects Q77 if a high-level positive voltage is applied to the + GATE OUT connector, and CR78 clamps the collector of Q77 at about -0.6 volt if a negative voltage is applied to the output connector.

SINGLE SWEEP RESET

The Single Sweep Reset input is provided to work in conjunction with horizontal plug-in units capable of performing the single-sweep function.

13

Z-AXIS AND FOCUS AMPLIFIER

The schematic diagram of the Z-Axis and Focus Amplifier is given on diagram 13, in Section 7, Diagrams and Circuit Board Illustrations. The schematic is divided by gray shaded lines separating the circuitry into major stages. Sub-headings in the following discussion use these stage names to aid in locating and identifying the components and portions of the circuitry discussed.

Z-AXIS AMPLIFIER

The Z-Axis Amplifier provides the drive signal to the crt control grid to control the crt intensity. The Z-Axis signal from the Mainframe Logic circuit (diagram 4) and the Ro Z-Axis (display intensity) signal from the Display D/A and Amplifier circuit are connected to the emitter of Q113 through R110 and R109, and from the input signals to the Z-Axis Amplifier. The output of the Z-Axis Amplifier at the collectors of Q173 and Q183 provides the drive signal to control the crt intensity level through the Control-Grid DC Restorer stage of the High Voltage Power Supply and CRT circuit (diagram 14).

Transistor Q113 is a common-base amplifier, and is used to establish a low input impedance for the Z-Axis Amplifier. Transistors Q122, Q127, Q132 and Q143 form a noninverting, current-driven, operational amplifier; the Z-Axis Ampl Gain, R125, and Output Level, R135, are set in this stage. The output stage of the Z-Axis Amplifier circuit consists of Q167, Q166, Q173, Q184 and Q183 in a high-speed operational amplifier configuration.

Transistor Q162 is a constant-current source for Q167 and Q166. The signal at the emitter of Q143 is dc coupled to the bases of Q167-Q166 through R166 to provide a fast rising pulse at the output of Q173. Transistors Q184 and Q183 maintain the output level of the Z-Axis Amplifier. The Z-Axis Amplifier is compensated to provide a fast rising pulse with optimum square corner by C180, C155, R155, C150 and R150.

Comparator U105 provides the GSF (good signal flip-flop) logic level going to the Digitizer Control Logic circuit (diagram 21). The reference voltage at pin 2 is set by the GSF Level adjustment, R102, and the signal level at pin 1 is compared to it. If pin 2 is lower than pin 1 the GSF output is HI. If the level at pin 2 is higher than at pin 1, the GSF output is LO.

Transistor Q142 acts as a switch turning the Z-Axis signal off and on. When the X-Y On signal is LO, Q142 is cut off and it does not affect the circuit operation. When the X-Y On signal goes HI, Q142 turns on pulling the base of Q132 to ground. This causes the majority of available current to Q122 and Q132 to flow in Q132, nearly shutting Q122 off. Under this condition, Z-Axis drive signals are virtually non existant and no trace is displayed.

http://manoman.sqhill.com

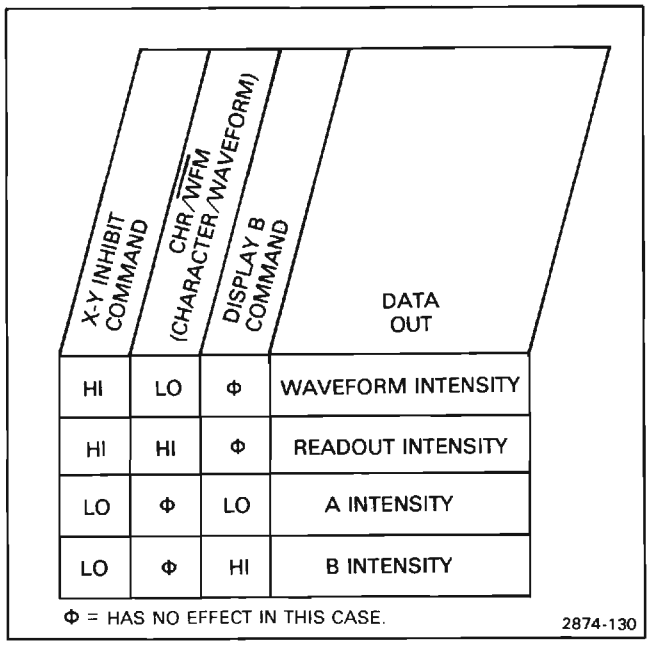

Figure 2-29. Input/output relationships for the Auto-Focus Channel Switch.

AUTO-FOCUS CHANNEL SWITCH AND AMPLIFIER

The Auto-Focus Channel Switch and Amplifier stages provide control voltages to maintain optimum focus of the crt display. When the front-panel FOCUS control is set for best definition of the crt display at low to medium settings of the INTENSITY controls, these stages maintain optimum focus for all portions of the display as it is switched between the digitized, A Horizontal, and B Horizontal displays.

Transistors Q36, Q32, Q39, Q46, Q49 and Q50 act as a current driven data switch that provides the correct input to the base of Q67 of the amplifier stage. This switch selects either the A Intensity, B Intensity, Readout or the Store Waveform Intensity input as determined by the X-Y Inhibit command, Display B command, and the CHR/$\overline{\text{WFM}}$ (Display Character/Stored Waveform) command. The input/output table in Figure 2-29 shows the output of the channel switch stage applied to the base of Q67 for each combination of the input conditions.

Transistors Q67, Q68, Q77 and Q83 are connected as a noninverting operational amplifier to amplify the output of the channel switch and drive the focus-grid electrode of the crt. Resistors R63, R62, R64 and R65, in conjunction with diodes CR64 and CR65, shape the output of the channel switch. Focus Gain adjustment, R63, determines the amount of signal to the base of Q67 to set the overall gain of the amplifier stage. Output Level adjustment, R70, determines the output level of this stage.

14

HIGH VOLTAGE POWER SUPPLY AND CRT

The High Voltage Power Supply and CRT circuits provide the potentials necessary for proper operation of the crt (cathode-ray tube). These circuits, in conjunction with the Vertical, Horizontal, Z-Axis and Auto-Focus Amplifiers, provide all quiescent potentials and signal information necessary for a properly displayed crt trace. The schematic diagram of the High Voltage Power Supply and crt circuits is given on diagram 14, in Section 7, Diagrams and Circuit Board Illustrations. The schematic is divided by gray shaded lines separating the circuitry into major stages. Sub-headings in the following discussion use these stage names to aid in locating and identifying the components and portions of the circuitry described.

POWER TRANSFORMER

The Power Transformer is driven by a 25 KHz square-wave voltage from the Converter/Rectifiers circuit (secondary of Low-Voltage Transformer, T110, on diagram 15). Three secondary windings on T14 provide power for the +130 V Supply, CRT Heater voltage, Anode Voltage Multiplier, and the CRT Cathode supply. The square-wave output of T14 also drives the Control-Grid DC Restorer and the Focus-Grid DC Restorer stages through the resistor pairs R61-R62 and R31-R32 respectively.

+130 V SUPPLY

The +130 V Supply provides a semi-regulated voltage for use in several circuits in the 7854; semi-regulation is achieved by the Inverter Control stage of the Converter/Rectifiers circuit, diagram 15. Diodes CR101 and CR102 rectify the voltage from the secondary of T14. Capacitors C103, C104 and R104 filter the rectified voltage.

CRT HEATER

The CRT Heater voltage is provided by a separate 6.3-volt secondary winding of T14. The CRT Heater circuit is elevated to the cathode potential through R93.

ANODE VOLTAGE MULTIPLIER

Positive accelerating potential for the crt anode is supplied by the seven times voltage multiplier contained within U21. The applied voltage to the input of U21 from the secondary of T14 is about three kilovolts peak-to-peak. This results in an output voltage of about +21 kilovolts at the crt anode. The high voltage sense output

http://manoman.sqhill.com

of U21 is tied to Q23 which interfaces this dc level to the Z-Axis Limit sense input of the Mainframe Logic circuit and to the ground reference points of T14 through CR17, CR18 and CR19.

CRT CATHODE SUPPLY

The negative three-kilovolt (-2965 V) accelerating potential for the crt cathode is generated by a voltage doubler consisting of CR83, CR82, C82 and C84. High frequency filtering is accomplished by R84, C86, R86 and C89. Components R86 and C89 also provide an ac-coupling path for error correction from the Cathode Supply Regulator stage.

CATHODE SUPPLY REGULATOR

The Cathode Supply Regulator maintains the potential on the crt cathode and reduces ac ripple from the CRT Cathode Supply. A sample of the output from the CRT Cathode Supply stage is connected to the Cathode Supply Regulator stage through divider resistors R52A, R116 and R115. High-frequency changes from the CRT Cathode Supply are coupled to the Cathode Supply Regulator through C119 and R119.

The Cathode Supply Regulator consists of a noninverting preamplifier U123 and an inverting output amplifier, Q129. The +50 volt supply connected to pin 3 of U123 (through HV ADJ, R115) in conjunction with the ground connected to pin 2 of U123 through R122, provide the reference for error amplifier U123. Transistor Q129 is connected as an inverting amplifier driven by U123 to provide error correction to the crt cathode supply.

Regulation occurs as follows: If the crt cathode voltage becomes less negative, a positive-going change is coupled to the input of U123 at pin 3 and results in a positive-going output at pin 6. This positive-going change is inverted by Q129 to a negative going change at its collector. This causes the voltage across C82 to increase during the positive half cycle of the input waveform. During the negative half cycle, the increased voltage across C82 increases the voltage at the output of the CRT Cathode Supply to correct the original error. High-frequency correction signals are ac coupled to the crt cathode through C89.

CONTROL-GRID DC RESTORER

The Control-Grid DC Restorer stage elevates the dc level of the Z-Axis Amplifier output to a potential more negative than the crt cathode. This action allows the control grid to control the crt beam current. The Control-Grid DC Restorer stage is driven by the square-wave output of T14. Diodes CR64 and CR63 are forward biased during the positive and negative half cycles of the input square wave respectively to limit the square-wave amplitude at their junction. Grid Bias adjustment, R65, sets the voltage on the cathode of CR64 to establish the forward-bias level and peak positive level at the anode of CR64. The dc level of the Z-Axis Amplifier output determines the voltage on the anode of CR63 to establish the forward-bias level and peak negative level at the cathode of CR63. The limited-amplitude square wave at the junction of CR64 and CR63 is coupled to the junction of CR67 and CR68 through C66. During the positive half cycle, CR67 is forward biased to clamp its anode at the crt cathode voltage level. During the negative half cycle, C69 is charged through CR68 to a voltage level more negative than the crt cathode by an amount equal to the difference between the Grid Bias adjustment setting and the Z-Axis Amplifier output level. High-frequency Z-Axis Amplifier signals are coupled to the control grid through C72, R72, R63 and C69.

FOCUS-GRID DC RESTORER

The operation of the Focus-Grid DC Restorer is similar to the operation of the Control-Grid DC Restorer. The limited-amplitude square wave at the junction of CR34 and CR33 is coupled to the junction of CR38 and CR37 through C36. The amplitude of the positive half cycle of the input square wave is clamped at approximately +130 volts by CR34. The peak negative amplitude is established by the dc level of the Auto-Focus Channel Switch and Amplifier output (diagram 13) through CR33. During the positive half cycle, the focus grid voltage is clamped to the voltage set by the FOCUS control R50 through R37, CR37 and CR38. During the negative half cycle, C39 charges through CR38 to establish the proper level at the focus grid electrode.

CRT CONTROL

The ASTIG adjustment, R160, used in conjunction with the FOCUS control R50 to obtain a well defined display, varies the voltage level on the astigmatism grid. The SHIELD VOLTS adjustment, R155, varies the positive potential on the grid shielding the vertical deflection plates from stray voltages existing within and near the crt. GEOM adjustment, R143, varies the positive level on the horizontal deflection plate shield to control the overall geometry of the display.

Two adjustments control the trace alignment by varying the magnetic field around the crt. The Y-AXIS ALIGN adjustment, R148, controls the current through L22, which affects the crt beam after vertical deflection but before horizontal deflection. Therefore, it affects only the vertical (Y) components of the display. The TRACE ROTATION adjustment, R142, controls the current through L21 and affects both the vertical and horizontal rotation of the beam.

http://manoman.sqhill.com

15

CONVERTER/RECTIFIERS

The Converter/Rectifiers circuit provides the operating power for this instrument from an ac line-voltage source. This circuit includes a LINE VOLTAGE SELECTOR switch located on the rear panel. Figure 2-30 shows a detailed block of the Converter/Rectifiers circuit. A schematic diagram of the Converter/rectifiers is given on diagram 15, in section 7, Diagrams and Circuit Board Illustrations. The schematic is divided by gray shaded lines separating the circuitry into major stages. These stage names aid in locating and identifying the components and portions of circuitry mentioned here.

LINE INPUT

Power is applied through line filter FL10, line fuse F10, and POWER switch S10. The line filter is designed to keep powerline interference from entering the instrument and to keep the approximate 25-kilohertz Inverter signal from entering the power line. Components R5, C5 and C6 suppress reverse-recovery transients of CR15.

The LINE VOLTAGE SELECTOR switch, S12, allows the instrument to operate from either a 115 volt nominal or a 230 volt nominal line voltage source. In the 115 volt position, rectifier CR15 operates as a full-wave doubler with energy-storage capacitors C16 and C17, so the voltage across the two capacitors in series will be the approximate peak-to-peak value of the line voltage. For 230 volt operation, CR15 is connected to a bridge rectifier and the voltage across C16 and C17 will be the

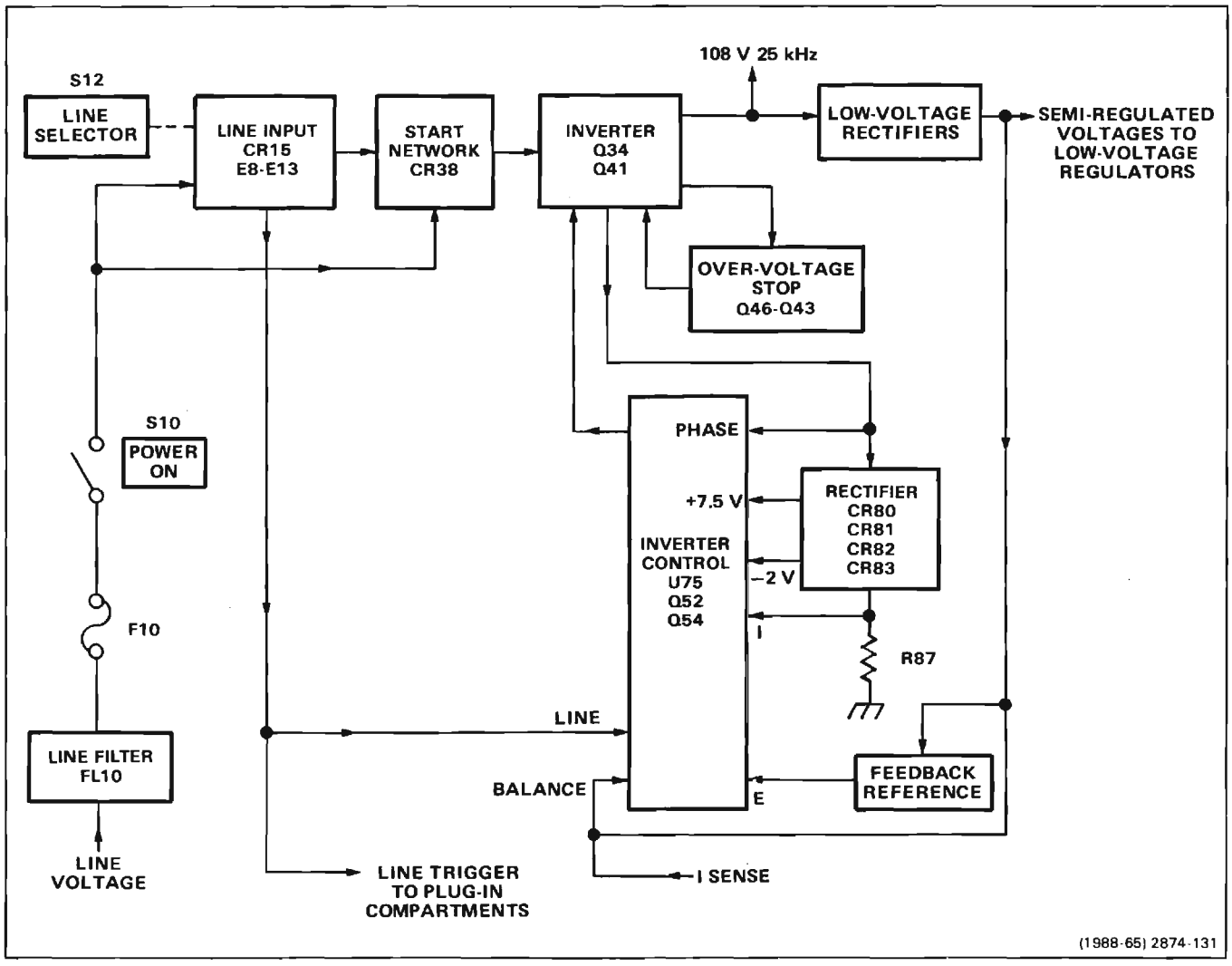

Figure 2-30. Detailed block diagram of the Converter/Rectifiers circuit.

http://manoman.sqhill.com

approximate peak value of the line voltage. Thus, the dc voltage applied to the Inverter stage is about the same for either 115 or 230 volt operation.

Thermistors RT9 and RT13 limit the surge current when the power supply is first turned on. After the instrument is in operation, the resistance of the thermistors decreases so that they have little effect on the circuit. When the instrument is turned off, the Inverter Control stage turns off the Inverter which prevents it from discharging C16 and C17; C16 and C17 discharge slowly through R21 to allow for thermistor thermal-recovery time. This ensures sufficient thermistor resistance to limit the turn-on surge current to a safe level. Since C16 and C17 discharge slowly, dangerous potentials exist within the power supply for several minutes after the POWER switch is turned OFF. The presence of voltage in the circuit is indicated by the relaxation oscillator R19, C19 and DS19. Neon bulb DS19 will blink until the potential across C16 and C17 drops to about 80 volts.

Spark gap electrodes E8 and E13 are surge-voltage protectors. When the LINE VOLTAGE SELECTOR switch is in the 115 volt position, only E8 is connected across the line input. If a peak voltage greater than 230 volts is present on the line, E8 will conduct and quickly open line fuse F10 to interrupt the input power before the instrument can be damaged. In the 230 volt position, E8 and E13 are connected in series across the line input to provide protection for peak voltages greater than 460 volts.

Transformer T8 provides a sample of the line voltage to the plug-in connectors for triggering at line frequencies. This line frequency signal is also connected to the Inverter Control stage to sense when line voltage is present.

INVERTER START

Components R10, R38 and C35 are connected between the input line (ac) and the negative side of C17 (through T25). Capacitor C42 charges on each cycle of the input line voltage. When the charge on C42 reaches about 33 volts, the programmable UJT (unijunction transistor) Q30 fires to provide base drive to turn on Q40 through C39. When Q40 turns on, it shock-excites series-resonant network L37 and C37 to generate a damped oscillation. This damped oscillation provides the drive necessary to start the Inverter switching action. After the Inverter is operating, the recurrent waveform at the collector of Q40 keeps C42 discharged through CR49, thus disabling the Inverter Start network while the instrument is on.

INVERTER

The Inverter stage converts the dc voltage across C16 and C17 to a sine-wave current to drive power transformer T110. Once the Inverter has been started by the Inverter Start network, transformer T30 provides feedback to the bases of Q34 and Q40 to sustain oscillation. These transistors operate at a forced beta of 4 due to the turns ratio of T30. Also, T30 provides a 60:1 turn ratio center-tapped winding for pre-regulation and fault protection shut-down. The Inverter Control stage short circuits one-half of this winding to either delay the turn-on of Q34 and Q40 or to completely stop their switching action.

The switching action of Q34 and Q40 generates a square-wave voltage with an amplitude approximately equal to the dc voltage at the input to this stage. The square-wave voltage at the emitter of Q34 supplies the drive necessary to maintain a sine-wave current in the series-resonant network of L37 and C37. Diodes CR34 and CR41 provide paths for series-resonant current when Q34 and Q40 are held off for pre-regulation.

To aid in understanding circuit operation, Figure 2-31A shows a representation of the Inverter stage as a switch. The three possible states of the Inverter are depicted by the three possible switch positions: Q34 is on in position (a); Q40 is on in position (c); or both transistors are held off for pre-regulation in position (b). In the composite current waveform of Figure 2-31B, the relative phase and amplitude of each component of I_t is shown for periods T_a, T_b and T_c corresponding to the three switch positions. Figure 2-31C and Figure 2-31D show the relationship of the Inverter voltage and primary winding voltages with respect to the current waveform.

The normal sequence of operation is as follows: assume that the voltage at point X is some voltage more positive than the negative supply voltage and that Q40 has just turned on. The current labeled I_4 in Figures 2-31A and 2-31B flows as the voltage at point W goes negative. Point X goes toward the negative supply voltage as C37 charges through L37. The voltage across the primaries of T110 and T35 at point Y produces a voltage at the secondary of T35 that is sensed by the Inverter Control IC, U75 (see Fig. 2-31D). When this voltage changes phase from negative to positive, Q40 is held off (turned off) by U75. Due to the inductive action of L37, current continues to flow through the Inverter circuit, pulling the voltage at point W below the negative supply voltage. This forward biases CR40, which now conducts I_1 (Figs. 2-31A and 2-31B). After a predetermined time, the Inverter Control IC, U75, allows Q34 to turn on and conduct the current labeled I_2 in Figures 2-31A and 2-31B. Since Q34 is now conducting, the voltage at point X charges toward the positive supply voltage through

http://manoman.sqhill.com

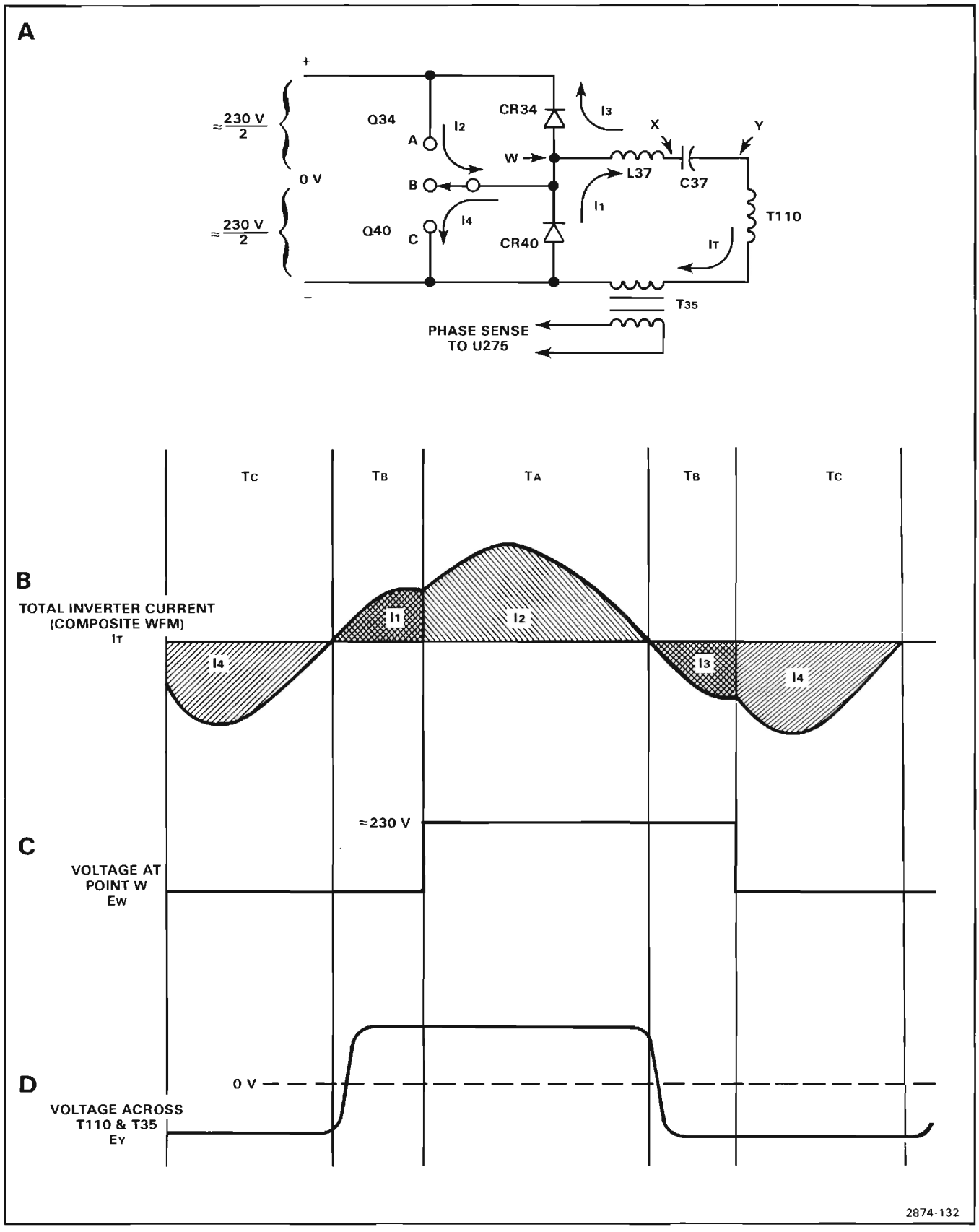

Figure 2-31. (A) Representation of Inverter stage. Idealized waveforms of (B) total Inverter current, IC, (C) Voltage across CR41 and (D) Voltage across primaries of T10 and T35.

http://manoman.sqhill.com

L37. Once again, voltage phase change is sensed at the secondary of T35 by U75 as previously described. Transistor Q34 is held off at this time and I_3 flows due to the inductive action of L37 pulling the anode of CR34 to a voltage greater than the positive supply voltage. After a time determined by the Inverter Control stage, Q40 conducts the current labeled I_4 and the cycle repeats itself.

Pre-regulation is achieved by varying the hold-off of the Inverter transistors, T_b in Figure 2-31B, thereby determining the net power delivered to T110.

OVER-VOLTAGE STOP

Whenever the voltage across the primary of T110 exceeds a safe level, the Over-Voltage Stop stage shuts down the Inverter to protect Inverter components from damage. For example, this stage activates whenever the normal voltage regulating path through Q52 and T30 is inoperative.

Capacitor C43 charges through CR44 and R44 to the peak voltage across the primary of T110. If this voltage exceeds a safe level, Q45 conducts to cause Q43 and Q46 to turn on. When Q46 turns on, the base-drive winding of T30 is short-circuited, which stops the Inverter switching action. Since Q43 is turned on, C42 in the Inverter Start network is prevented from charging to the firing voltage of Q30, thus preventing the Inverter from starting. Transistors Q45 and Q43 continue to conduct until C43 has discharged sufficiently through R45 to turn Q45 off. At this point, Q43 and Q46 will turn off and the Inverter will start on the next positive half cycle of the line.

INVERTER CONTROL

The Inverter Control stage, made up of primarily U75, provides pre-regulation and fault protection functions. For pre-regulation purposes, U75 varies the hold-off time (T_b, in Fig. 2-31B) of the Inverter switching transistors.

Under normal operating conditions, only the voltage sense (E Sense) input at pin 15 controls the hold-off time. However, various fault conditions can affect hold-off time or stop the Inverter operation altogether. The operation of each individual function of the Inverter Control stage is described in the following discussion.

Pre-Regulator

The pre-regulator operation of U75, maintains constant voltage at the outputs of the Low-Voltage Rectifiers stage. It also provides constant peak-to-peak voltage to the High-Voltage Power Supply and CRT circuit (diagram 14).

Transformer T35 provides Inverter phase information and power to U75. The phase information is connected to pins 10 and 11 through C77 and C78. Bridge rectifier CR73, CR74, CR76 and CR75 provides positive and negative operating voltages to U75. A shunt regulator in U75 maintains the +7.5 volts at pin 6. The -2 volt (nominal) supply connected to pin 7 is unregulated. Zener diode VR72 provides protection against open circuit conduction (U75 removed) and is normally not conducting.

Pin 15 is the voltage sensing (E Sense) point of the pre-regulator circuit. Zero volts at pin 15 indicates proper regulation. Zener diode VR88 provides a stable reference voltage for sensing-divider resistors R93, R95, R86 and R87. Variable resistor R93 in this divider adjusts the ratio of the divider to adjust the output of the +108 volt supply. Outputs of the other supplies are then set by the turns ratio of T110.

Integrated circuit U75 regulates the Inverter by varying the hold-off time of the switching transistors, Q34 and Q40. A variable pulse-width monostable multivibrator in U75 is triggered at pins 10 and 11 whenever the Inverter current changes direction. The pulse width holds off the Inverter by turning on transistor Q52 through pin 9 of U75, thus shorting out the base drive to Q34 and Q40. The pulse width and therefore holdoff is controlled by a ramp at pin 12. If the voltage at the E Sense input, pin 15, is too low, the ramp is not allowed to rise very high and the pulse width and holdoff are short. As the E Sense voltage rises, the ramp is allowed to rise to a higher voltage level, increasing the holdoff time.

Fault Protection

The fault protection portions of U75 provide protection for the power supply components due to short circuits, turn-on surge currents, and other malfunctions. When a fault is detected at the Fault Sense input (pin 2) or I Sense input (pin 13), a current from the Fault Holdoff Time output (pin 1) charges C64. If the detected fault lasts longer than about 10 milliseconds, C64 will charge positive enough to initiate a positive output at pin 8. This output turns on Q54 and Q52 which turns off the Inverter. The Inverter will remain off while C54 discharges through R54, keeping Q54 and Q52 turned on. The Inverter restarts in roughly 500 milliseconds when the current through R54 is insufficient to keep Q54 and Q52 turned on. When the inverter restarts, C54 is recharged through CR59 and R59. This cycle repeats until the fault is corrected, with the Inverter on for about 10 milliseconds, and off for about 500 milliseconds.

http://manoman.sqhill.com

Inverter Current Limiter

The inverter current limiter provides protection for the Inverter components from damage due to excessive current turn-on or short circuits. Operation of this stage is similar to the pre-regulator (voltage regulation). The inverter current limiter takes control of the Inverter hold-off time whenever pin 13 starts to go negative. Transformer T35 provides a current step-down. The current is rectified and flows through R84, the current-sensing resistor. The voltage across R84 is negative and proportional to the Inverter current. The I Sense input at pin 13 is normally held positive through divider R81, R82 and R83. The Inverter Current Limiter takes control of regulation when pin 13 reaches near zero volts. Peak Inverter current is limited to about 5 amperes. If the voltage at pin 13 remains near zero for more than about 10 milliseconds, pin 8 will go positive to turn off the Inverter.

Fault Sense

The fault sense portion of U75 provides overload protection for those supplies on the Low Voltage Regulators and Fan Board schematic. Diagram 16 and other supplies generated throughout the instrument. Resistive networks from supplies are connected to the Fault Sense input at pin 2 of U75. During normal operation, the voltage at the Fault Sense input remains near zero. If one of the inputs changes sufficiently to cause this voltage level to vary 200 millivolts (positive or negative) for more than 10 milliseconds, a positive output is produced at pin 8 of U75 to stop the inverter. Thermal switch S72 opens up the -50VS line to stop the inverter should ambient temperature of the instrument exceed approximately 140° F (60° C)

Line Stop

The line stop portion of U75 stops the Inverter when the POWER switch, on the front panel, is turned OFF. The Line Stop stage will also stop the Inverter if the ac line voltage falls below a minimum value.

The line-frequency signal from transformer T8 is connected to pin 4, the Line Stop Sense input of U75. During normal operation, the line-frequency signal causes the Line Stop Timer terminal (pin 3) to periodically discharge to ground. When the line-frequency signal is interrupted or falls below a minimum value, C67 will charge to approximately +0.7 volt causing the Line Stop stage to produce a positive output at pin 8 of U75 to stop the Inverter.

POWER UP LOGIC

When the instrument is first turned on, the Power Up Logic stage produces a LO at its output, pin 6 of U179B, for about 2 seconds, after which time a HI output is produced, indicating that power is on.

When the power is initially turned on, the unregulated -17 volt supply pulls the emitter of Q171 LO through R171, turning it on. At the same time, the collector of Q171 has been pulled to +5 Volts through C172 which begins to charge through R171 and Q171 towards the -17 volt supply potential. Transistor Q173 is turned off and Q177 is turned on until C172 has charged to a level of about +1.5 volts. This level is determined by voltage divider R173 and R174 between +5 volts and the LO output level at pin 12 of U179A. When C172 reaches this level, Q173 turns on, turning Q177 off. This forces input pin 13 of U179A HI which causes its output, pin 12, to also go HI. This HI level acts as positive feedback through R174 to the emitter of Q173, latching the circuit in this state. Components CR171 and Q171 limit the voltage to which C172 may charge to about -0.7 volt.

The HI level at pin 12 of U179A is applied to pin 11 of U179C. Since the levels at pins 9 (set by R181 and R182) and 10 of U179C (set by Q162) are HI, its output at pin 8 goes HI.

When the instrument is turned off, this circuit produces a LO output level before the regulated power supply voltages begin to drop. The Inverter Stop signal, at pin 8 of U75, goes HI allowing Q162 to turn on, producing a LO at pin 10 of U179C. The resultant LO at pin 8 is coupled through C183 to pin 9 of U179C, ensuring that the output at pin 8 is held at a stable LO condition. The PUP signal follows this level.

The time delay incorporated in this circuit is to ensure that all the regulated power supplies are running and settled to their proper levels before the digital portion of the ocilliscope begins operation.

LOW-VOLTAGE RECTIFIERS

The Low-Voltage Rectifiers stage rectifies the square-wave ac voltages at the output windings of T110 to the dc levels used for all regulated supplies in this instrument.



LOW-VOLTAGE REGULATORS AND FAN BOARD

A schematic diagram of the Low-Voltage Regulators and Fan Board circuit is given on diagram 16, in Section 7, Diagrams and Circuit Board Illustrations. The schematic is divided by gray shaded lines separating the circuitry into major stages. These aid in locating and identifying the components and portions of circuitry described here.

http://manoman.sghill.com

Sub-headings in the following discussion use these stage names to further identify the components and portions of the circuitry shown on diagram 16. Figure 2-32 shows a detailed block diagram of the Low-Voltage Regulators and Fan Board circuit.

The Low-Voltage Regulators convert semi-regulated voltages from the Converter/Rectifiers circuit (diagram 15) to stabilized low-ripple output voltages. The regulators are series type, using the +50 volt supply as a reference.

OPERATIONAL AMPLIFIER POWER SUPPLIES

The operational amplifiers used to regulate the +50, +15, +5, −50, and −15 volt supplies require that four special voltages be generated for their operation:

(1) The +22 volt supply is generated from the semi-regulated +54 volt supply by reference zener diode VR32 and emitter follower Q34.

(2) The −22 volt supply is generated from the semi-regulated −54 volt supply by reference zener diode VR36 and emitter follower Q38.

(3) The +5.6 volt supply is generated from the semi-regulated +17 volt supply by zener diode VR152.

(4) The −5.6 volt supply is generated from the semi-regulated −17 volt supply by zener diode VR156.

+50 V REGULATOR

Semi-regulated +54 volts from the Converter/Rectifiers circuit (diagram 15) provides the unregulated voltage source for this supply. Differential amplifier U15 compares the feedback voltage at pin 2 against the reference voltage at pin 3. The error output at pin 6 of U15 reflects a difference between these two inputs. Zener diode VR12 sets a reference level of about +9 volts at pin 3 of U15. A sample of the output voltage from the +50 volt supply is connected to pin 2 of U15 through divider network R16, R15 and R14. Variable resistor R15 in this divider sets the output level of this supply. Notice that the feedback voltage of this divider is obtained from a line labeled +50 VS (sense). If the feedback voltages were obtained at the supply, the voltage at the load would not stay constant, due to the inherent resistance of the interconnecting cable between the supply and its load. The sense configuration overcomes this problem by sensing the voltage at the load. Since the current in the sense line is small and constant, the load voltage is held constant regardless of the load current.

Regulation of voltage occurs as follows: If the output level of this supply decreases (becomes less positive) due to an increase in load or a decrease in input voltage (as a result of line-voltage change or ripple), the voltage across divider R16, R15 and R14 decreases also. This results in a less positive level at pin 2 of U15 than that established by zener diode VR12 at pin 3 of U15. This decreases the current through CR15 and VR17 causing a similar increase in current through the base-emitter junction of Q28. This results in increased conduction of Q28, the +50 volt series regulator. The load current increases and therefore the voltage across the load also increases (becomes more positive) sufficiently to balance the input into differential amplifier U15. The +50 V ADJ, R15, sets the output level of this supply.

Current foldback protection is provided for the +50 volt supply if excessive current is demanded from the supply. Since the load is connected to this supply through R28, all current from the +50 volt supply must flow through this resistor. Under normal operation there is insufficient voltage drop across R28 to turn Q22 off. However, when excessive current is demanded from the +50 volt series regulator (Q28) due to a short circuit or similar malfunction at the output of this supply, the voltage drop across R28 increases and begins to turn off Q22. The reduced collector current of Q22 results in a reduction of current through Q28. This current limiting protects Q28 from damage due to excessive power dissipation.

Several protection diodes are also included in this circuit. Diode CR28 prevents the output of this supply from going more negative than about −0.6 volt if it is shorted to a negative supply. Zener diode VR10 and diode CR10 supply a turn-on voltage for U15 to start the +50 volt supply when the instrument is first turned on. As soon as the +50 volt supply turns on, CR10 stops conducting.

−15 V REGULATOR

Basic operation of all stages in the -15 V Regulator is the same as for the +50 V Regulator. The reference level for this supply is established to ground through R82 at pin 5 of U84B. The divider ratio of R80 and R81 sets a level of zero volts at pin 6 of U84B. The level on the +50 VS (sense) line is held stable by the +50 volt supply. Any change at the output of the -15 volt supply appears at pin 6 of U84B as an error signal. The output voltage is regulated in the same manner as described for the +50 volt supply. Diode CR96 limits the output of this supply from going more positive than about +0.6 volt if it is shorted to one of the more positive supplies. Operational amplifier U84A provides current foldback protection for Q94 by monitoring the voltage drop across R95. When too much current is demanded from the supply, the increased voltage drop across R95 allows U84A to turn Q88 off, in turn reducing the current through Q94.

http://manoman.sqhill.com

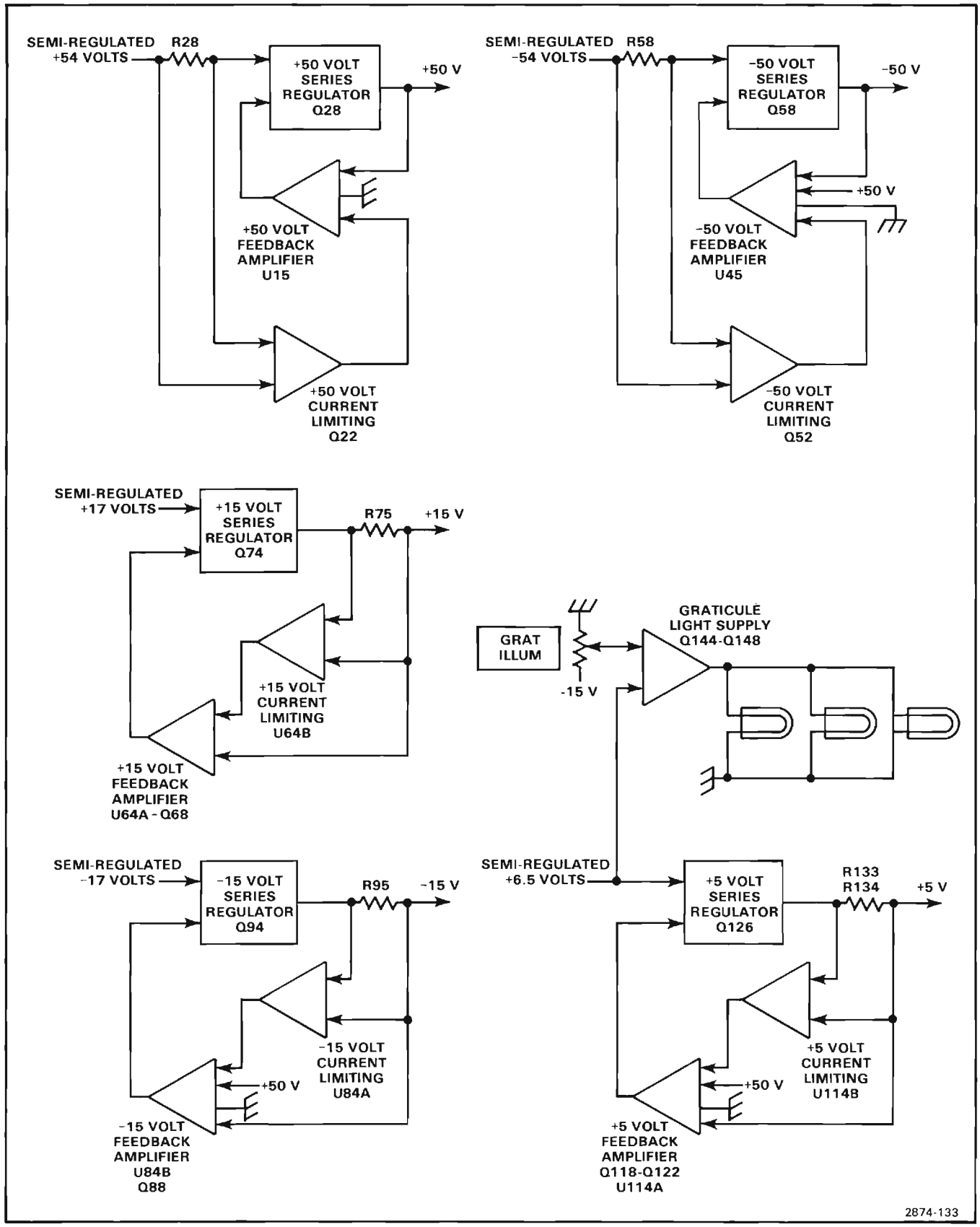

Figure 2-32. Detailed Block Diagram of the Converter/Rectifiers circuit.

http://manoman.sqhill.com

+5 V REGULATOR

The operation of the +5 V Regulator is basically the same as described for the previous supply regulators. Error voltage to pin 2 of U114A is provided through R131 and pin 3 is referenced to the +50 VS (sense) line. The divider ratio of R113 and R114 is 10:1, so pin 3 of U114A is at +5 volts when the supply is operating normally. The level on the +50 V Sense line is held stable by the +50 volt supply. Therefore, any change at the output of the +5 volt supply appears at pin 2 of U114A as an error signal. The output voltage is regulated in the manner described previously for the +50 volt supply. Diode CR132 limits the output of this supply to about -0.6 volt, if it is shorted to one of the negative supplies.

The +5 volt current foldback protection is accomplished by U514B and protects this supply from excessive output current damage. With normal supply current through R133 and R134, the voltage drop across this parallel resistance is such that the base of Q118 is biased on. If the current through R133 and R134 increases above a safe level, pin 7 of U114B reduces the forward bias current to Q118. Now, the base current of Q122 is reduced which decreases the voltage on the base of Q126. This limits the conduction of Q126 to a safe current level.

+15 V REGULATOR

The +15 V Regulator regulates in the same manner as that of the +50 volt supply; current foldback protection operates in the manner described for the +5 volt supply. Error feedback voltage to pin 2 of U64A is provided through R69. Pin 3 of U64A is referenced to the +50 VS (sense) line. The divider ratio of R61 and R62 sets pin 3 of U64A at +15 volts. Any change in the output level of the +15 volt supply appears at pin 2 of U64A as an error signal. This results in an opposite change at the output, pin 1 of U64A, which is conveyed to the +15 volt series regulator transistor Q74 through CR64 and Q68 to correct the error in the output voltage of the supply. Diode CR76 limits the output of this supply to about -0.6 volt if it is shorted to one of the negative supplies.

-50 V REGULATOR

Operation of the -50 V Regulator is basically the same as described for the +50 volt supply; current foldback protection operates in a similar manner, as described for the +50 volt supply. Error voltage to pin 2 of U45 is provided by divider R45-R46 and is referenced to the -50 VS (sense) line, from the +50 VS line. The divider ratio of R45 and R46 sets the level at pin 2 of U45 at zero volts when the output of this supply is correct. The protection diode CR58 limits the output voltage of this supply to +0.6 volt should the supply be shorted to a positive supply.

FAN CIRCUIT

The fan motor used in this instrument is a brushless dc motor, using Hall Effect devices. The two Hall Effect devices sequentially drive the four transistors (Q20 A, B, C and D) which, in turn, control the current flow through the four field windings. The fan motor speed is regulated by limiting the current flow through Q10. Diodes CR21, CR22, CR23 and CR24 rectify the back emf produced by the four field windings. This voltage is applied to the base of Q10 through resistive divider network R24, R25 and R11. The voltage developed by this circuit is proportional to the motor speed. If the motor speed starts to increase, the current drive to the base of Q10 will decrease, reducing the current to the motor, thus maintaining a constant motor speed.

GRATICULE LIGHT SUPPLY

The Graticule Light Supply provides power to illuminate the graticule lights. The front-panel GRAT ILLUM potentiometer controls the output of this supply to set the brightness of the graticule lights. Transistors Q144, Q148 and diode CR148 form a voltage following current buffer. The output voltage at the collecor of Q148 follows the voltage set at the base of Q144 by the divider made up of R142, R141, R143 and the GRAT ILLUM control, R55, on the front panel. Resistor R148 limits the output current from this supply to protect Q148 from damage due to a short circuit.



FRONT-PANEL CONTROLS

A schematic diagram of the Front-Panel Controls is given on diagram 17 in Section 7, Diagrams and Circuit Board Illustrations.

The Front-Panel Controls provide for user control of the A (sweep) INTENSITY, B (sweep) INTENSITY, STORED WFM (waveform) intensity, READOUT OFF/MAX intensity, trace FOCUS, GRATicule ILLUMination level, and the BEAMFINDER function for locating waveforms outside of the normal crt display area.

In addition, the CONTRAST preset (R80), a screwdriver adjustable potentiometer, is tied between the A INTENSITY control and the Z-Axis Logic stage of the Mainframe Logic circuit (diagram 4). This adjustment allows for optimum contrast between the intensified portion of a delayed sweep and the overall sweep. With this configuration, the intensified current increases as the A INTENSITY control setting is advanced. Therefore,

http://manoman.sqhill.com

the intensified zone is more readily visible at high intensity levels. The ASTIGmatism preset adjustment, R160 is used to adjust the overall viewability of the crt trace while R142, the TRACE ROTATION preset, is adjusted to properly align the trace display with respect to the crt graticule.



KEYBOARD SYSTEM

The Keyboards system consists of the Front Panel Keyboard, Calculator Keyboard and Keyboard Interface circuits shown on diagrams 18, 19 and 27, respectively. These schematics are divided by gray shaded lines separating the circuitry into major stages. These stage names are used as an aid in locating and identifying the components and portions of circuitry mentioned here. A block diagram of the Keyboards system showing the relationship of these stages to each other and to the 7854 system busses is shown in Figure 2-33.

The Keyboard Flags stage, shown in Figure 2-33, allows the microprocessor to control the keyboard hardware by using the 7854 Address and Control busses (see diagram 27). This stage, in conjunction with the current-buffering LED Drivers stage, provides circuitry to present some system status information to the user in the form of visible front-panel LEDs and an audible warning.

The Clock Divider stage (diagram 27) divides the 3 MHz Φ3 system clock down to an 11.7 kilohertz rate and applies this slower clock to the Keyboard Scanner stage. It also provides an 11.7 kilohertz clock with special timing relationships for stopping Keyboard scanning. The Keyboard Scanner stage, when properly enabled, produces an incrementing eight-bit code (K0-K7) that is applied to the keyboards via the keyboard cable.

The Column Scanner stage (diagram 18) decodes an incrementing counter output, bits K4-K7, to sequentially drive only one of 8 columns of the Keyboard matrix LO. Each time a new column is driven LO, the Row Scanner stage sequentially scans each of the 16 possible rows of the Keyboard matrix as selected by K0-K3, to determine if a key has been pressed. A LO applied from the Column Scanner stage through a closed key to the Row Scanner stage indicates that a particular key has been pressed. When detected, a LO $\overline{\text{KDOWN}}$ level is generated and applied to the Keyboard Stop-Scan stage (diagram 27).

The Keyboard Stop-Scan stage monitors the $\overline{\text{KDOWN}}$ (key down) level and when a key in the Keyboard matrix has been checked and found to be pressed, two events are initiated. First, one-shot U200B fires, stopping the Keyboard Scanner from incrementing, thereby "freezing" the count at the keycode of the key that was found pressed. Secondly, a LO $\overline{\text{IKB}}$ (keyboard interrupt) level from U320B is applied to the microprocessor interrupt system, indicating that a key has been pressed and needs to be "read".

As the microprocessor services this interrupt request, it enables the Keyboard Data Bus Buffer stage and the eight-bit keycode (K0-K7) uniquely representing the key pressed is put onto the data bus and read by the microprocessor. When the user releases the key, keyboard scanning is re-enabled and a new key may be read.

CLOCK DIVIDER

Clock Divider stage, U120 and U1000D on diagram 27 is an 8-bit counter that develops a keyboard scan clock with a frequency of 11.7 kHz by dividing (counting down) the 3 MHz Φ3 clock frequency by 256 using an 8-bit counter. This free running 11.7 kHz square wave clock with a 50% duty cycle is applied to pin 13 of U220A of the Keyboard Scanner stage. (See the timing diagram, Fig. 2-34.) The output of U1000D is also 11.7 kHz but with a duty cycle of about 25% and is used for stopping the scanning of the keyboards.

KEYBOARD SCANNER

The Keyboard Scanner stage, consisting of U220A, U310 and U420, develops the necessary incrementing keycodes for the scanning of the Front Panel and Calculator Keyboards and stores those keycodes for use by the microprocessor when a user command key is pressed.

When the levels at pins 1 and 2 of U220A from the Keyboard Stop-Scan stage are HI, indicating that no key has been pressed, the keyboard scan clock, developed by the Clock Divider stage, is applied to pin 13 of U220A. This clock is inverted by U220A, and clocks an 8-bit binary counter, U420.

As consecutive clock pulses are applied to the clock input of U420, 256 unique 8-bit keycodes are generated at the eight Q outputs of the counter. IC U310 buffers these binary keycodes and drives the column and row scanner stages of the Calculator and Front Panel Keyboards. The four least significant bits of a keycode, K0-K3, are used to sequence the row scanner while keycode bits K4-K7 sequence the column scanner.

http://manoman.sqhill.com

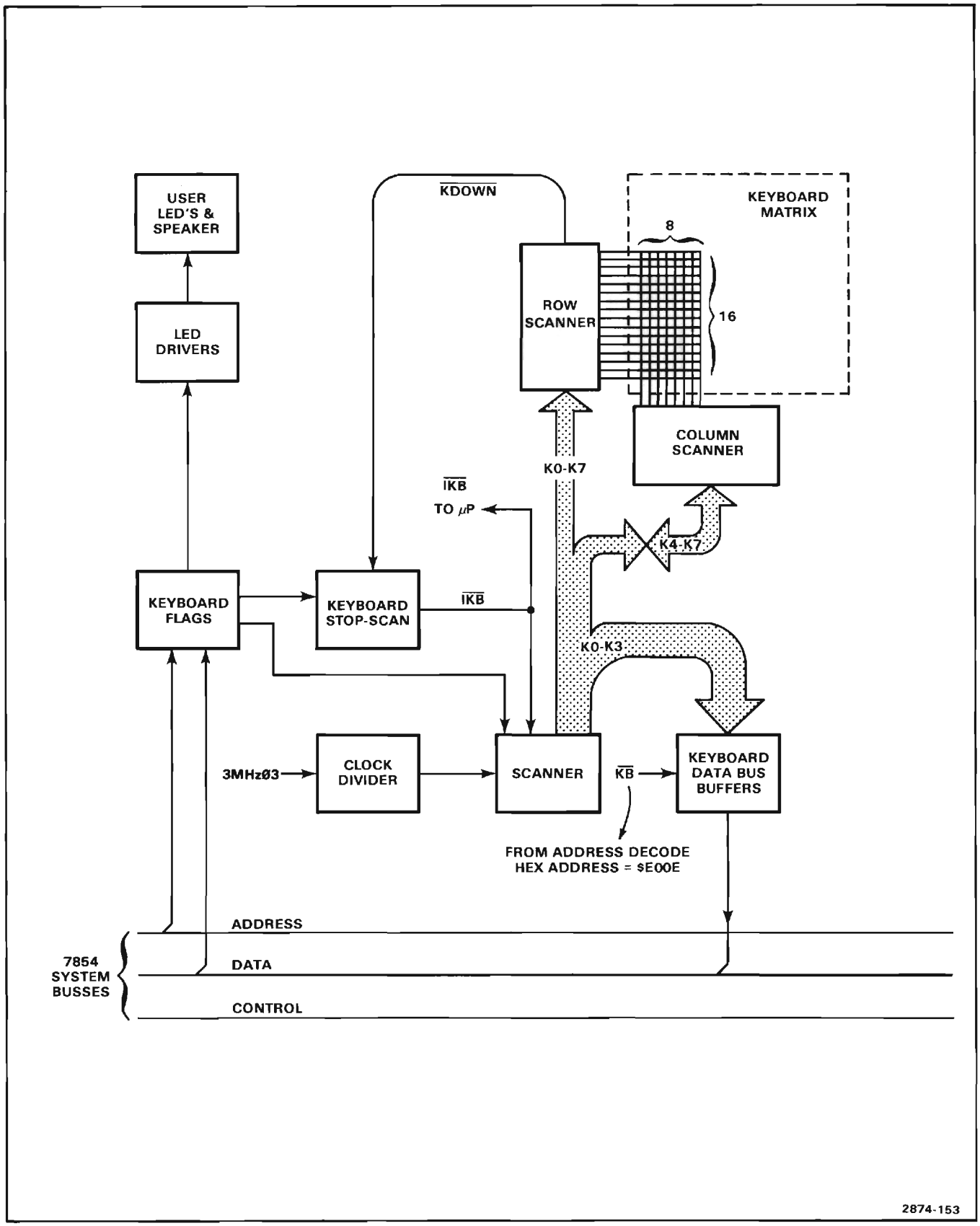

Figure 2-33. Detailed Block Diagram of the Keyboard system

http://manoman.sqhill.com

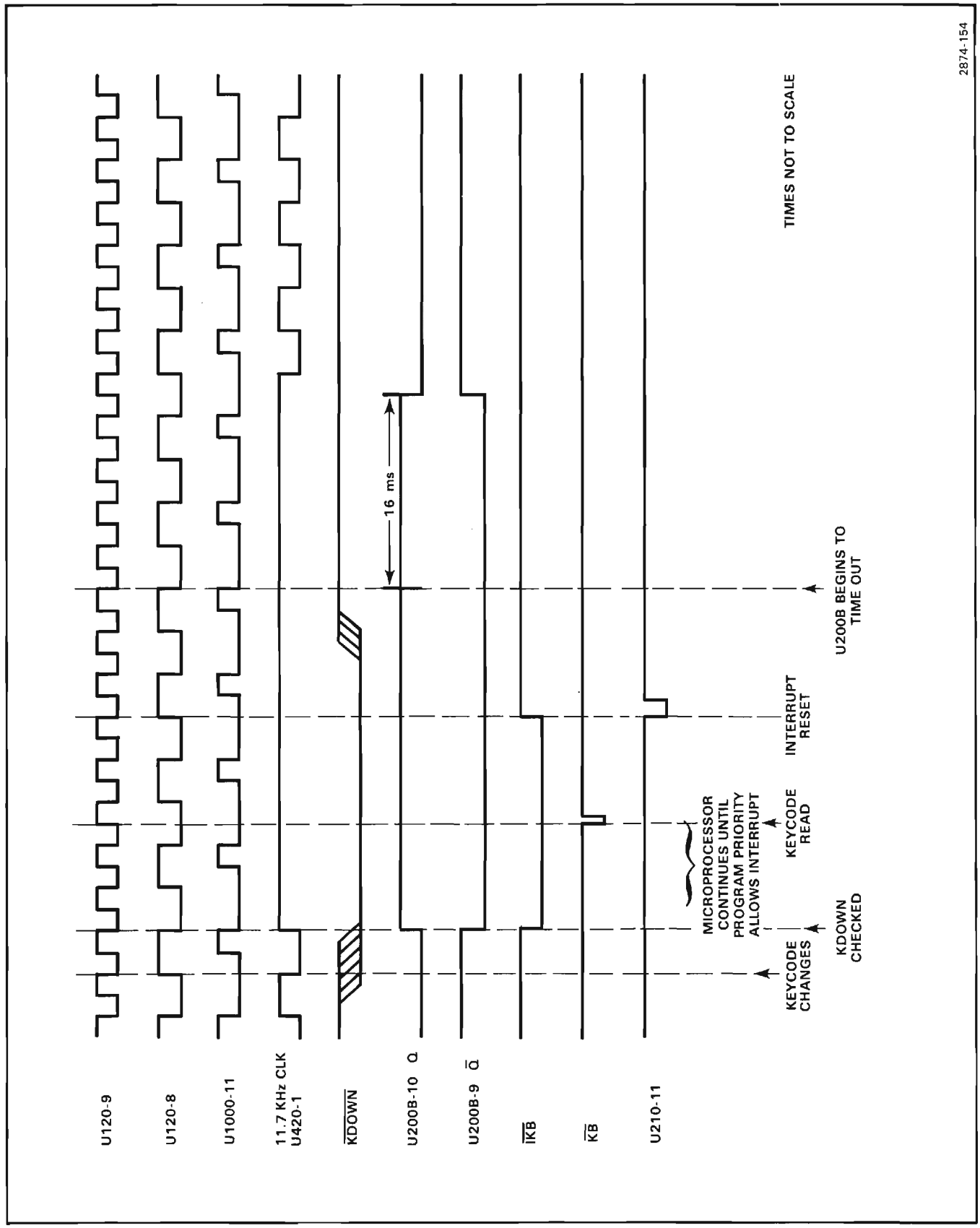

Figure 2-34. Timing Diagram for the Keyboard System.

http://manoman.sqhill.com

DATA BUS BUFFER

Data Bus Buffer stage U410 (diagram 27) buffers the keyboard scan keycode to the Data Bus so that the microprocessor may read the keycode of a depressed key. This buffer may be gated on (to apply keycodes to the Data Bus) or forced to a high impedance state (to isolate this data) depending on the level of the $\overline{KB}$ signal from the Address Decoder stage on diagram 28.

KEYBOARD STOP/SCAN

The Keyboard Stop/Scan stage determines whether the Keyboard Scanner counter, U420, should continue generating the incrementing keycodes or stop at the present keycode when a key is detected as being pressed. The key detection is signaled to this stage by the $\overline{KDOWN}$ level at input pin 12 of U200B, generated by either the Calculator or Front Panel Keyboard circuits when a key is pressed. Refer to the timing diagram in Figure 2-34 for the following discussion.

Upon power up, a LO flag level caused by $\overline{RESET}$, is applied to the set input of U320B; this sets the $\overline{IKB}$ (keyboard interrupt) level at its Q output HI to ensure that no keyboard interrupt is generated. The preset is then removed so an interrupt may be generated when a key is detected as pressed. At this time, the $\overline{Q}$ output of U200B is HI since no key has yet been pressed. This allows the 11.7 kHz clock to pass through U220A of the Keyboard Scanner stage, and incrementing keycodes are now generated.

When the keycode corresponding to a key that is pressed is generated, the $\overline{KDOWN}$ level applied to U200B goes LO, indicating that a key has been detected as pressed. This enables the 11.7 kHz clock at the output of U1000D (see timing diagram, Fig. 2-34) to trigger the one-shot, U200B. The input clock to the one-shot is delayed with respect to the incrementing clock applied to the Keyboard Scanner stage to allow the $\overline{KDOWN}$ level and the new keycode data to settle before the one-shot $\overline{KDOWN}$ input is checked. On the falling edge of this delayed clock, one-shot U200B is fired and its $\overline{Q}$ output goes LO. The level change at the output of U200B stops the sequential incrementing of keycodes by disabling the clock through U220A to U420 of the Keyboard Scanner stage. At the same time, the Q output of U200B goes HI and clocks U320B's $\overline{IKB}$ level LO to generate an interrupt signal to the microprocessor (diagram 28), indicating that a closed key has been detected and should be read. When the microprocessor services this interrupt, it puts the keycode data on the Data Bus and then reads it. The keyboard flag at pin 11 of U210 of the Keyboard Flags stage is then pulsed LO to clear the keyboard interrupt request and then returns HI. This allows U320B to later toggle (when the next key is detected as pressed) from its preset HI state to generate another keyboard interrupt. When the user releases the key, the $\overline{KDOWN}$ level returns HI. The one-shot, U200B, times out (approximately 16 ms) and the one-shot returns to its stable state ($\overline{Q}$ HI and Q LO), resuming keycode incrementing until another key is pressed by the user.

KEYBOARD FLAGS

The Keyboard Flags stage provides interface between the instrument and the user as well as providing control levels necessary to perform certain functions within the instrument. It is made up of U210. The three low order address bits at pins 1, 2 and 3 uniquely address one of the 8 output pins 4-7 and 9-12. When enabled by a LO $\overline{KBFLG}$ level, the CRUOUT level, applied to pin 13 is transferred to the addressed output. These are only changed by being set to their complimentary state or by a $\overline{RESET}$ command at pin 15 which resets all outputs to a LO level.

Front panel LEDs or an audible warning interface certain types of system status to the user.

The BUSY indicator, a front-panel LED, tells the user that the microprocessor is busy executing the user assigned instruction.

The ERROR indicator LED is illuminated when an error occurs. For example, the LED would light if an inappropriate command (one having restrictions that have not been met), uninterpretable command or a prematurely terminated transmission was generated or if a peripheral device could not properly respond over the GPIB.

An audible warning is provided to the user if the rear panel AUDIBLE ERROR/WARNING switch is open and an error condition occurs. The audible warning is also generated if the microprocessor determines that the results of an operation may not be valid.

An additional flag output at pin 11 of U210 is used to reset U320B in the Keyboard Stop-Scan stage to its HI Q output level, resetting the keyboard interrupt as previously described.

KEYBOARDS

The Keyboard stages of the Front Panel and Calculator Keyboards (diagrams 18 and 19) are made up of 29 and 81 switches, respectively, arranged in a matrix, each with a dedicated function. In addition, several of these keys also have a shift function. For both keyboards, each of these keys is addressed by a combination of the Column and Row Scanner stages. For each keycode that is generated, if the corresponding key is pressed, a LO

http://manoman.sqhill.com

from the Column Scanner stage is applied through the closed switch to the Row Scanner stage and a $\overline{\text{KDOWN}}$ (keydown) is generated. By recognizing the keycode applied to the Column and Row Scanner stages when a key is sensed as being depressed, that key may be identified.

COLUMN SCANNER

The Column Scanner stages of these keyboards consist of U520 and U320 respectively; each is a 3-line to 8-line decoder/demultiplexer. The four most-significant bits of the Keyboard Scanner address developed by the Keyboard and Signature Analysis circuit (see diagram 27) are applied to the A, B, C and $\overline{\text{G2B}}$ (gate) inputs of U520 (and U320 when Calculator Keyboard is connected). When the $\overline{\text{G2B}}$ level is LO, the three bit address applied to the A, B and C inputs results in a LO at only one of the eight outputs of U520 and U320. These outputs are applied to the switch matrix of the respective keyboard.

ROW SCANNER

The Row Scanner stage of the Front Panel Keyboard consists of U400, U510C, U510D and their associated components. U220A, U220B, U520 and U620 make up the Row Scanner stage of the Calculator Keyboard. The four least significant bits of the Keyboard Scanner keycode developed by the Keyboard and Signature Analysis circuit (see diagram 27) are applied to the A, B, C and $\overline{\text{STROBE}}$ inputs of U400, U520 and U620. When the $\overline{\text{STROBE}}$ input of U400 is LO, the address on the A, B, and C input lines select the information at one of its 8 data input pins D0-D7 to be inverted and applied to output pin 6 of U400. This level applied to U510D is again inverted and results in the $\overline{\text{KDOWN}}$ level. Similarly, U520 and U620 of the Calculator Keyboard circuit select the data from one of 16 lines to generate the $\overline{\text{KDOWN}}$ level. When the $\overline{\text{KDOWN}}$ level is LO, indicating that a key is pressed, the Keyboard Scanner stage of the Keyboard Interface and Signature Analysis circuit stops advancing, and this "frozen" Keyboard Scanner keycode is read by the microprocessor (the keycode of the key just pressed).

The K3 keycode bit from the Keyboard Interface and Signature Analysis circuit is applied to the $\overline{\text{STROBE}}$ input of U400 and to the input of U510C of the Front Panel Keyboard. When this level is LO, U400 is enabled and U510D is enabled due to the output of U510C being HI. When the K3 keycode bit goes HI, however, U400 is disabled and the output of U510C goes LO. This forces the output of U510D to go HI and it stays at this level until the K3 level once again goes LO.

Similarly for the Calculator Keyboard, the K3 keycode bit enables either U520 or U620 to check for a pressed key. If detected, a LO $\overline{\text{KDOWN}}$ level is generated and keycode incrementing ceases.

LED DRIVERS

The LED Drivers stage for the Front Panel Keyboard circuit consists of Q120 through Q330, DS620 through DS721 and their associated components. A HI from the corresponding keyboard flag applied to the base of any of these transistors through the associated base resistor turns on the transistor, illuminating the LED.

Q110 and its associated components compose the output driving stage used to produce an audible warning. The tone produced is generated by software toggling the level of the Audio flag input level to this stage. When the rear panel switch input at P210 is switched to ground, the audible warning is disabled by removing bias from Q110. Software may still toggle the Audio flag level when disabled in this manner but no tone will be produced.

The LED Drivers stage of the Calculator Keyboard circuit consists of U220D, U220E, DS800 and DS1000 and is similar in operation to that of the Front Panel Keyboard circuit in that a HI ERROR or BUSY level, applied to the open collector inverters U220D or U220E, from the Keyboard Interface and Signature Analysis circuit illuminates the corresponding LED on the Calculator Keyboard panel.

20 VERTICAL AND HORIZONTAL SAMPLER

The Vertical and Horizontal Sampler circuit samples, stores, and buffers the instantaneous analog voltage levels from the Vertical Pickoff Amplifier and the Horizontal Channel Switch and Pickoff circuits (diagrams 8 and 10 respectively) so they may later be displayed on the crt.

A schematic of the Vertical and Horizontal Sampler circuit is given on diagram 20, in Section 7, Diagrams and Circuit Board Illustrations. The schematic is divided by gray shaded lines separating the circuitry into major stages. These stage names are used to aid in identifying the components and portions of circuitry described.

SAMPLING BRIDGE

The Sampling Bridge stage consists of CR245, CR246, CR247, CR248, CR345, CR346, CR347, CR348 and their associated components. The sampling bridges provide a means of switching instantaneous analog voltage levels from their inputs to their outputs. Operation of the vertical and horizontal sampling bridges are identical; therefore only a description of the vertical Sampling Bridge is given.

http://manoman.sqhill.com

Quiescently, sampling bridge diodes CR245, CR246 CR247 and CR248 are reverse biased due to the current flowing through R236, R237, T237, R241 and R243 biasing CR242 and CR244 on.

With the presence of a strobe pulse of approximately 10 ns duration from the Vertical Strobe stage, the Sampling Bridge diodes are forward biased for most of the pulse duration. The single-ended, positive strobe pulse applied to T233 results in both a positive and negative pulse applied to C234 and C235. These pulses are coupled through these capacitors and applied to T237 which serves to make these pulses equal and opposite. This pulse current flowing through R241 and R243 is greater than, and opposite to, the normal quiescent currents and the Sampling Bridge becomes forward biased.

When the Sampling Bridge is forward biased, the output voltage of the bridge at C245 follows the input voltage developed across R245. When the strobe pulse ends, the diodes are once again reverse biased and C245 holds (stores) the analog voltage level sampled at the input of the Sampling Bridge until the next strobe pulse occurs. This level is maintained since the impedances of the reverse biased diodes of the sampling bridge and the IGFET (insulated gate field effect transistor) to which C245 is connected are very high, preventing appreciable current leakage from occurring.

STROBE INPUT

The Strobe input stage consists of Q206, Q207, DL211 and their associated components. This stage interfaces TTL levels to the Sampler's ±15 volt environment. It also delays the horizontal strobe command with respect to the vertical strobe command. This is necessary because hardware in the analog portion of this instrument delays the vertical signal with respect to the horizontal sweep at all times. In normal operation, the horizontal sweep ramp is applied to the horizontal sampling bridge and the sampled data (after digitizing) is used as a memory address for storing the value of the vertical point just sampled (and digitized). The delay incorporated in the Strobe Input stage is used to recreate the proper X-Y time relationships in memory by delaying the sampling of the horizontal value by a time approximately equal to the amount the vertical signal is delayed to the sampling bridge by the crt delay line.

The $\overline{\text{VSTB}}$ (vertical strobe) command applied to the base of Q206 through R203 is current buffered and applied to the emitter of Q207. This is voltage buffered and applied to delay line, DL211, and transistor Q222 of the Vertical Strobe stage. The output of the delay line, DL211, is applied to the Horizontal Strobe stage and is delayed in order to recreate proper time relationships between vertical and horizontal samples.

VERTICAL AND HORIZONTAL STROBE

The operation of the Vertical and Horizontal Strobe stages are identical, therefore only the Vertical Strobe stage is discussed.

The Vertical Strobe stage is made up of Q222, Q223, Q227 and their associated components. This stage produces a narrow sampling pulse to be applied to the Sampling Bridge stage with the presence of a vertical strobe command from the Strobe Input stage.

The vertical strobe command from the Strobe Input stage is applied to the base of Q222 as either a HI or LO (Q207 operates only saturated or cut-off). When this command goes LO, indicating that a strobe pulse is to be generated, the emitter, and thus the collector of Q223 goes LO, pulling the base of Q227 LO through CR226. This saturates Q227, pulling its collector to about +14.3 volts from its previous -9 volt potential.

This transition causes a reverse current to flow in CR231 for a period of about 10 ns, forward biasing CR232 for this time. This pulse is coupled to T233 of the Sampling Bridge stage.

VOLTAGE FOLLOWERS

The operation of the vertical and horizontal Voltage Followers is identical, therefore only a discussion of the vertical Voltage Follower is given.

The vertical Voltage Follower stage consists of Q250, Q251, Q252, Q256, Q262, Q263, Q273 and their associated components, connected as an operational amplifier voltage follower. Transistors Q251, Q252 and Q256 are each current sources for the remaining transistors within the stage. The analog voltage output of the Sampling Bridge stage is applied to the gate of Q250A of the vertical Voltage Follower stage. Any voltage change at this input gate results in a corresponding change of the output voltage of the stage at the collector of Q273.

If, for example, the input voltage at the gate of Q250A should go more positive, its source, connected to the base of Q262B, will also go positive. This causes more current to flow through Q262B, making its collector go more negative. At the same time, the collector of Q262A goes positive since Q262A and Q262B act as emitter coupled transistors. These changes applied to the bases of another emitter coupled pair, Q273 and Q263, cause the output at the collector of Q273 to go more positive; to a value equal to the input voltage at the gate of Q250A.

CHANNEL SWITCH

The Channel Switch stage is made up of Q284, Q285, Q286, Q296, Q384, Q385, Q485, Q487, Q493, Q452, Q453 and their associated components. This stage

http://manoman.sqhill.com

switches the sample voltages from either the vertical Voltage Follower or the horizontal Voltage Follower stages to the A/D output of the Channel Switch stage.

The H/$\overline{V}$ Sel (horizontal/vertical) switching signal from the Digitizer circuit (diagram 26) is applied to the base of Q452 through R451. If for example, the H/V Sel signal should go HI, the base-emitter junction of Q452 will become reverse biased, turning off Q487 as well. Current through R452 now forward biases Q453 and the voltage across R485 caused by this current forward biases Q485. Emitter current for Q385 A and B flows through Q493 and Q485, allowing Q385A, Q385B, Q384 and Q296 to operate as a feedback amplifier.

The bases of Q385A and Q385B serve as the non-inverting and inverting inputs of this amplifier respectively. In its balanced state (no transition occuring), the voltages at these inputs are equal and the output of the stage at the anode of zener diode VR296 is at a stable voltage level. Now, when the voltage applied to the base of Q385A from the Horizontal Voltage Follower stage changes, say in a positive direction, the amplifier inputs are momentarily in an unbalanced condition. Transistor Q385A conducts harder and additional current is drawn from the +15 V supply through R284, VR284, R384, Q384 and R385. This additional current flow through R284 pulls the base of Q296 negative. This transition is inverted at its collector and the output of the stage at the anode of VR296 tends more positive. The voltage divider formed by R294, R291, R290 and R292 applies a portion of this output voltage to the base of Q385B. The output will continue positive until the base of Q385B is at the same potential as the base of Q385A. Once again the input voltages are equal and the amplifier is in a balanced condition. Any subsequent change at the base of Q385A is responded to in a similar manner. Adjustment R290 sets the Gain of this stage and R380 sets the offset bias for this amplifier.

When the H/$\overline{V}$ Sel input from the Digitzer circuit goes LO. Q452 and Q487 are turned on while Q453 and Q485 are turned off. This turns the amplifier stage just mentioned off, and at the same time, emitter current is provided to Q285A and Q285B through Q493 and Q487. Since Q284, Q285A and Q285B now replace (electrically) Q384, Q385A and Q385B respectively, these transistors, along with Q296 form an operational amplifier that operates identically to that previously described for the sampled vertical signal. Potentiometer R280 provides offset adjustment for biasing this amplifier.

DECOUPLING FILTERS

The Decoupling Filters stage consists of several Icr filters, which isolate current and voltage changes on any of the ±15 volts supply lines from the other supply lines.

21 DIGITIZER CONTROL LOGIC

The Digitizer Control Logic circuit generates the addresses necessary for storing digitized data, dependent on the number of points per waveform selected by the operator. This stage also produces the control levels required for the digitizer system to request and assume control of the instrument busses in order to store digitized waveform information. A schematic diagram of the Digitzer Control Logic is given on diagram 21, in Section 7, Diagrams and Circuit Board Illustrations. The schematic is divided by gray shaded lines separating the circuitry into major stages. These stage names are used to aid in locating and identifying components and portions of circuitry discussed.

DATA/CLOCK SELECT

The Data/Clock Select stage consists of U1220, U1230, U1320, U1420B, U1510A, U1510B, U1530C and U1530D. This stage determines, from the acquire word (Acquire Word Bus) indicating PPW (points per waveform) resolution, what portion of a memory write address for storing digitized waveform information should be derived from the A or B Word Bus and how much should come from the digitizer circuitry. It then provides proper data switching and the necessary clock sequencing to generate such an address.

Integrated circuit U1220 is a presettable four-bit synchronous up/down counter connected in the count-up configuration. When a $\overline{VSTB}$ (vertical strobe) pulse appears at its LD (load) input, the LO levels at its A, B, C and D inputs appear at its Q outputs. When $\overline{VSTB}$ returns HI, these LOs are latched into the IC. This LO $\overline{VSTB}$ level, also applied to U1420B and U1510A, sets their respective Q and $\overline{Q}$ levels applied to U1320 LO. The LO Q_D level applied to the S (set) input of U1510B sets its $\overline{Q}$ output LO. This is applied to the G2 input of U1320, enabling it to read its 1CØ and 2CØ inputs and apply this data to its 1Y and 2Y outputs. When the $\overline{VSTB}$ level returns HI, U1220 begins counting from 0 at a 10 MHz rate as the SR CLK (shift register clock) becomes enabled with the presence of a HI RNSAR (successive approximation register running) level applied to U1530C through U1320. As U1220 counts, U1230, a 4-bit magnitude comparator, compares the resulting 4-bit word generated by U1220 to that word applied to its A inputs from the Acquire Word Bus. As long as this 3-bit word is greater in magnitude than the magnitude of the word generated by U1220 (remember U1220 started counting at 0), the D level applied to U1510A remains HI. When the two magnitudes become equal however, this level goes LO and the next SR CLK pulse causes the $\overline{Q}$

http://manoman.sqhill.com

output of U1510A to go HI, disabling the SR CLK by switching the 2Y output of U1320 to ground potential. The number of pulses counted thus far represents the number of data bits shifted into the shift registers of the Address Generator stage from the Address Select stage as explained in those descriptions.

A short time later, the ESAR (end from successive approximation register) pulse (indicating that digitizing of a data point is complete) clocks U1420B, switching its Q output to a HI level. This HI, applied to U1320 of the Data/Clock Select stage once again enables the SR CLK by allowing the data at its 1C3 and 2C3 inputs to be transferred to its 1Y and 2Y outputs. Now, data is clocked to the Address Generator stage from the DSAR (successive approximation register data) input applied to the 1C3 input of U1320. As this data is clocked to the Address Generator stage, U1220 resumes counting. When its Q_D output tied to U1510B goes HI (count 8), each succeeding SR CLK applied to U1510B clocks the data present at its D input to its Q output. This D input level remains HI until both the Q_B and Q_C outputs of U1220 next go HI (count 14). The next SR CLK (count 15) causes the $\overline{Q}$ output of U1510B to go HI and, at the same time, clocks the 15th bit of address data to the Address Generator stage. The HI applied to the G2 input of U1320 disables this IC and thus the SR CLK. Near the beginning of the next digitizer cycle, a $\overline{VSTB}$ pulse is applied to the Digitizer Control Logic circuit, reinitiating the initial conditions and the entire cycle again.

BUS CONTROL

The Bus Control stage consists of U1330B, U1330C, U1420A, U1430A, U1430E, U1430F, U1520B, U1620B, U1630D, U1730A, U1730B, U1930, C1330 and R1320. This stage is responsible for generating the digitizer bus request to the microprocessor board, indicating that a point is being digitized and will need to be stored, as well as performing the proper handshaking with other circuitry in the instrument for the proper transfer and storage of digitized waveform information.

This stage operates, and is described, in two distinct modes; the first being the Internal Acquire Mode in which the oscilloscope is digitizing waveform data points in a pseudo-random manner. The second mode is the External Acquire mode (or single-shot mode) in which the clock internal to the 7B87 Time Base plug-in or from its external clock input is used to digitize a single sweep in a sequential fashion.

Internal Acquire Mode

When operating in the Internal Acquire Mode, the Bus Control logic stage requests use of the data, address and control busses at the time a data point is sampled and before it is digitized. Requesting control of the busses at this time, as opposed to when the data point is fully digitized and ready for storage, enhances digitizer throughput (the number of data points that the digitizer system may acquire and store in any length of time) by reducing the amount of time that the digitizer has to wait to gain control of these busses.

Initially the LO system $\overline{RESET}$ level applied to U1520B forces its Q output HI and the $\overline{Q}$ output LO, resulting in a HI applied to U1730B and a HI $\overline{DMEM}$ (digitizer memory enable) level. The HI applied to the D input of U1730B is clocked into this flip-flop with the presence of a delayed clock pulse applied to it through U1630D, U1330C, R1320 and U1330B. With acquire word bit 12 (from the Acquire Word Bus) applied to U1630D LO (Internal Acquire Mode), a LO to HI transition of the H/V $\overline{Q}$ (horizontal/vertical) level at its other input from the Data/Clock Select stage, results in a HI level applied to U1330C, clocking U1730B after a time delay determined by R1320 and C1330. As U1730B is clocked, the LO resulting at its $\overline{Q}$ output is applied to U1930. When acquiring, either internally or externally, bit 13 of the acquire word applied to U1930's A select input is always HI. Bit 12, applied to the B select input, is HI only when acquiring externally and, as was mentioned earlier, is now LO since the instrument is acquiring internally. These two select levels allow the data at the 1C1 and 2C1 inputs of U1930 to be applied to its 1Y and 2Y outputs respectively. The LO level applied from U1730B to U1730A through U1930 resets U1730A, ensuring that the digitizer is not requesting the busses. The resulting LO at the Q output is applied to U1730B, resetting its $\overline{Q}$ output HI. This is the initializing sequence followed when a system reset occurs during power up.

Now that the stage is initialized, it may now monitor the activity of the digitizer. A HI GSF (good signal flip-flop) level from the Z-Axis Amplifier stage (diagram 13) applied to the D input of U1730A indicates that valid data is available to be sampled. When a HSTB (horizontal strobe) occurs, indicating that valid data has been sampled, this HI GSF level is clocked into U1730A and a LO $\overline{BRDIG}$ (digitizer bus request) is generated at its $\overline{Q}$ output. When the microprocessor (diagram 28) recognizes this bus request, it may either ignore it or grant control of the busses to the digitizer, depending on what the microprocessor is doing at that time.

If the busses are not granted to the digitizer, the next delayed clock pulse applied through U1630D, U1330C, R1320 and U1330B to the clock input of U1730B

http://manoman.sqhill.com

changes the $\overline{Q}$ output level to LO. This resets U1730A through U1930 and $\overline{BRDIG}$ is removed. At the same time that the digitizer bus request is removed, the LO level at the Q output of U1730A applied to U1730B resets this abort level to a HI, once again establishing initial conditions so that the next valid data point may request the busses as previously described.

If the busses are granted to the digitizer, the LO $\overline{BGDIG}$ (digitizer bus grant) from the DMA Control circuit (diagram 24) enables U1430E and U1430F. At this time a LO R/$\overline{W}$ level and a HI $\overline{MEM}$ (memory enable) level result at their respective outputs. Since the digitizer is a device that may only write to memory, U1430E is connected so that it may only generate a LO R/$\overline{W}$ level when enabled. The next clock to U1420A through U1630D, resulting when the horizontal data is through being digitized, transfers the LO $\overline{BGDIG}$ level at the D input of U1420A to its Q output and applies it to U1520B. This resets U1520B and results in a LO $\overline{MEM}$ and $\overline{DMEM}$ levels applied to the Mother Board (diagram 37). The resulting LO at the Q output of U1520B is applied to the D input of U1730B. When the clock pulse, having been delayed by U1330C, R1320, C1330 and U1330B to allow this data level to settle, is applied to U1730B, the data is clocked into the IC and its $\overline{Q}$ output remains at its HI level. This maintains the bus request and allows the remainder of the bus transfer to occur.

The LO $\overline{MEM}$ level applied to the DMA Control circuit (diagram 24) from U1430F tells it that the digitizer has recognized that it now has control of the busses. Acknowledging this, the DMA Control circuit applies a $\overline{RBR}$ (remove bus request) to all DMA devices. Since the LO $\overline{BGDIG}$ level applied to U1620B is the only bus grant present within the instrument at this time, the LO $\overline{RBR}$ applied also to U1620B affects only digitizer circuitry as other DMA devices ignore the $\overline{RBR}$. The resulting LO at the output of U1620B sets the $\overline{Q}$ output of U1730B LO This resets U1730A through U1930 and the $\overline{Digitizer\ Bus\ Request}$ is removed. The $\overline{WE}$ (write enable) level applied to U1520B from the DMA Control circuit now goes LO indicating that transfer of data to memory is now occurring. At the end of data transfer, the $\overline{WE}$ level returns HI, clocking U1520B. This returns its $\overline{Q}$ output to its LO level, terminating the LO $\overline{DMEM}$ and $\overline{MEM}$ levels. This ends the cycle and the digitizer bus grant is now removed. This cycle takes place each time a data transfer from the digitizer to memory occurs, when in the Internal Acquire Mode.

External Acquire Mode

Operation of the Bus Control stage when in the External Acquire Mode differs from the Internal Acquire Mode in that the $\overline{IACQ}$ (acquire interrupt) level is applied to U1730A via U1930 at its reset input while its set input is held LO. This is determined by the now HI level of bit 12 of the acquire word applied to U1930 at its B select input. The LO at the set input of U1730A sets the $\overline{BRDIG}$ level LO at all times. This bus request may only be terminated by a LO $\overline{IACQ}$ level, indicating that the external acquire process is complete or has been manually terminated by the user, and is applied through U1930 to the reset input of U1730A. While digitizing data sequentially, as is the case when acquiring in the External Acquire Mode, it is necessary for the digitizer system to maintain bus control to ensure the storage in memory of all sampled data points; so the bus is requested at all times.

The HI mode bit 12, also applied to U1630D at this time, changes the time at which U1420A is clocked in relation to the digitizing sequence. When in the External Acquire Mode, the HI to LO transition of the H/$\overline{V}$ $\overline{Q}$ signal, indicating that vertical data has been sampled, applied to U1630D results in a clock to U1420A. This has changed as, when in the Internal Acquire Mode, U1420A is clocked with a LO to HI transition of the H/$\overline{V}$ $\overline{Q}$ level, indicating that both vertical and horizontal data has been sampled. This time change that occurs in the clock to U1420A changes the time that the $\overline{DMEM}$ and $\overline{MEM}$ levels are generated, allowing only vertical data to be stored into memory, thus decreasing the time required to store enough valid data to represent a waveform.

ADDRESS SELECT

The Address Select stage is made up of U1030, U1130 and U1520A and provides a means for individual bits of the A word and B word to be selected and applied to the Data/Clock Select stage.

The 8 high-order bits from the A Word and B Word Busses of the Address Generator circuit (see diagram 22) are applied to U1130 and U1030 respectively. Only one of these ICs may be enabled at a given time as determined by U1520A. The incrementing three-bit address from the Data/Clock Select stage, applied to the A, B, and C inputs of U1030 and U1130, selects the addressed bit of the enabled IC and applies it to the 1CØ input of U1320 of the Data/Clock Select stage.

U1520A determines, from the acquire word and XY On levels, which Word Bus (A or B) should supply data to the Data/Clock Select stage, and enables the appropriate IC. When the Acquire Word Bus bit-11 is HI, U1520A's Q and $\overline{Q}$ outputs toggle, alternately enabling U1030 and U1130, as the XY On signal from the Digitizer Clock circuit (diagram 23) clocks it.

http://manoman.sqhill.com

This also generates the DTCSC (dual trace channel switch control) level used elsewhere in this instrument. If the Acquire Word Bus bit-11 should be LO, only U1030 is enabled since U1520A's Q output is latched LO.

INTERNAL ACQUIRE ADDRESS GENERATOR

The Internal Acquire Address Generator stage consists of two 8-bit shift registers, U830 and U930, connected serially to form a 16-bit register, and U1620D. This stage receives the sequential data clocked to it from the Data/Clock Select stage (made up of high order bits from the A or B Word Busses and data from the Digitizer circuit) and, after a 15-bit address word has been accumulated, buffers this word to the Address Bus when properly enabled.

The data applied to the data input of U930 is clocked into the IC and shifted sequentially on the rising edges of consecutive SR CLK pulses applied to the clock input, pin 12, of U930. This data consists of high order bits from either the A Word Bus or B Word Bus and the digital information derived from the digitizing of a data point by the digitizer circuitry, as selected by the Data/Clock Select stage, and is stored in this sequence. When a 15-bit address word has been stored in this manner and the Bus Control logic determines that this data may be transferred, a LO applied to U1620D enables the outputs of U830 and U930 and this address word is applied to the Address Bus.

22 ADDRESS GENERATOR

The Address Generator circuit generates unique 15-bit addresses for storage of digitized waveform information in memory (RAM). Memory addresses are generated when initiated by the microprocessor in either the Display Mode or the DMA External Acquire mode. A schematic diagram of the Address Generator circuitry is given on diagram 22 in Section 7, Diagrams and Circuit Board Illustrations. The schematic is divided by gray shaded lines separating the circuitry into major stages. These stage names are used to aid in identifying components and portions of circuitry discussed.

COUNTER

The Counter stage is made up of U200A, U300C, U300F, U400C, U400D, U600, U630, U1200 and U1300. Integrated circuits U600, U1200 and U1300 are presettable up/down counters and are set to count the number of bits necessary to complete display of a waveform for a particular resolution. The upper bits (five to eight bits) are set directly from data on the Data Bus and direct one of the DMA (direct memory access) devices (under microprocessor control) to a to a particular memory block, for retrieval or input purposes. The lower ten to seven bits represent the changing portion of the generated address.

The data used to set the counter and the preset high order address bits is applied to the data input pins of U630, U1200 and U1300 from the Data Bus and to U600 through U630. With the presence of a LO $\overline{WE}$ (Write Enable) and an $\overline{AWRD}$ (A Word) pulse applied to U400D, this data is latched into U630 and the counters U600, U1200 and U1300 are set. Now, with each consecutive pulse applied to the count up input of U1200 from the output pin 7 of U1120 in the Word/Clock Select stage, the output address to the A Word Bus from the Counter stage advances one count. When U1200 overflows, the count up input of U1300 is clocked by the carry output of U1200. Similarly, U600 is clocked by the Qc output of U1300 through U300B.

In this way, the high order bits direct the DMA device to a specific memory block while the lower order bits generated by the counter sequentially step through the individual memory addresses of this block.

MODE WORD LATCH

The Mode Word Latch stage consists of U200B, U300E, and U1720. Four bits of data, which define the mode in which the instrument is to operate, are clocked in and latched by U1720 with the presence of a $\overline{DMDWRD}$ (digitizer mode word) or $\overline{WE}$ (write enable) command. This mode word is applied to the Mode Word Bus, determining the source of the clock and the point at which a Full Once command is generated by the End-of-Count Detector stage.

A WORD BUFFER

The A Word Buffer stage consists of U620 and U730. This stage buffers the sequential addresses generated by the Counter stage to the Data Bus with the presence of a LO control level applied to pins 1 and 19 of U620 and U730. In the single-shot acquire mode, it is used to read the address of the last data point acquired. This address is used to determine the sequence in which data points were entered into memory and thus, the order in which this data should be displayed to properly represent the acquired waveform.

END-OF-COUNT DETECTOR

The End-of-Count Detector stage consists of U700, U1630C and their associated components. The 3 bits of the mode word applied to U700 selects data from one of 8 inputs to appear at its W output. In this way, one of five

http://manoman.sqhill.com

outputs of the Counter stage as well as the $\overline{ERO}$ (End of Readout) input from the Vertical Display and Control circuit (diagram 32) may be monitored.

The mode word, containing waveform resolution information, selects one of these outputs to detect when the Counter stage has counted either 128, 256, 512 or 1024 bits, corresponding to waveform resolution. When the selected output bit of the Counter stage changes state, the W output of U700 applies an inverse of this transition to U1630C. Since the rc network formed by R1630 and C1631 causes any transition at pin 10 of U1630C to be delayed with respect to that at pin 9 of U1630C, a positive-going Full Once pulse is produced at the output of U1630C on any transition of the W output level at U700.

WORD/CLOCK SELECT

The Word/Clock Select stage consists of U320A, U1120, U1830B, and U1400B. This stage, depending on the levels of the A and B inputs of U1120, selects the source of the clock input to the Counter stage and determines the source of the high order bits for the Address Output stage.

The B input of U1120 is bit 11 of the Mode Word. This bit, when HI, indicates that the instrument is in the Display Mode. The A input of U1120 is derived from the $\overline{IACQ}$ (acquire interrupt) and external clock levels through U1400B and is only high when the instrument is in the Acquire Mode. In this way, only the data at inputs 1C1, 1C3, 2C1 and 2C3 may be transferred to the 1Y and 2Y outputs.

When in the Display Mode (input B HI), the ADDADV (address advance) pulse applied to pin 4 of U1120 is switched to output pin 7 of U1120 and acts as the clock applied to U1200 of the Counter stage. At the same time, the B Word Sel level at pin 12 of U1120 appears at output pin 9 of U1120 and is applied to the Address Output stage, selecting the high order bits of the Address Output stage.

When in the Acquire mode, the display Mode Word bit 11 is LO, the $\overline{IACQ}$ level at pin 5 of U1400B is HI and the Acquire Word Bus-12 at pin 4 of U1400B is HI. This results in a HI applied to the A input of U1120 and the levels at the 1C1 and 2C1 inputs appear at the 1Y and 2Y outputs respectively. The Aux Clock (external clock address advance) signal is applied through U1120 to the clock input of the Counter stage at pin 5 of U1200 and the DTCSC (dual trace channel switch control) is applied to the Address Output stage, also through U1120.

Integrated circuit U320A, when clocked by the output of U1630C of the End-Of-Count Detector stage, disables the clock output of U1120 by applying a HI to pin 1 of U1120. This HI results as the HI mode word bit applied to the D input of U320A (bit 11) is clocked to its Q output. The $\overline{Q}$ output of U320A produces the $\overline{IDSY}$ (display interrupt) level to the Microprocessor and Control circuit (diagram 28). The $\overline{RDSY}$ (reset display) and $\overline{STPDSY}$ (stop display) inputs to U320A from the Mother Board (diagram 37) serve respectively to enable and disable the clock select portion of U1120

B WORD ADDRESS COUNTER

When acquiring more than one waveform at a time, the data representative of the vertical deflection of each point going into memory must be organized into two memory blocks, each block representing a unique waveform. Since acquisition of data points alternates between waveforms, alternate data words must be directed into different memory blocks. The B Word Address Counter stage generates the secondary addresses required to do this. This stage is made up of U400A, U400B, U800 and U900 and acts very similarly to the setting of the high order bits in the Counter stage.

The B Word Address Counter stage accepts and stores eight bits of a data word from the Data Bus at the inputs of U800. This data is stored by U800 with the presence of a LO $\overline{WE}$ (write enable) and a LO BWRD (B Word) command at the inputs of U400B which produces a clock to U800. Four bits of the data latched into U800 are applied to U900 and, with the application of either a clock pulse from U400B, a Full Once pulse from U1630C to U400A or both. This results in a LO LD (load) command applied to U900 which sets the four output bits of this counter IC to the data levels at the corresponding inputs. The clock applied to the count up input of U900 is the same clock that is applied to U600. In this way, these two counters (U600 and U900) advance at the same rate, even though they are initially set to different values. The low order bits of the A Word from the Counter stage, in conjunction with the eight bits of data developed by the B Word Address Counter stage produce a unique B Word address as explained in the description of the Address Output stage.

ADDRESS OUTPUT

The Address Output stage consists of U820, U920, U1020, U1400D, U1620A and U1630B. This stage develops, from the A Word produced by the Counter stage and the partial B Word from the B Word Address Counter stage, two unique address words addressing two distinct blocks of memory. These two blocks of memory are alternately addressed when digitizing both channels of a dual vertical plug-in at the same time by alternating

http://manoman.sqhill.com

the select level applied at pin 1 of U920 and U1020. These two ICs switch either the A or B high order bits at their inputs to their outputs, determining the highest eight bits of the output address. Integrated circuit U820 buffers the seven lowest bits from the Counter stage to the Address Bus when enabled.

And gate, U1400D, with the presence of a LO Acquire Word bit-12 or a LO $\overline{\text{DMEM}}$ level applied to it through U1620A and a LO $\overline{\text{ADDBUF}}$ (address buffer) level at its inputs, enables U820, U920 and U1020, applying a 15 bit address to the Address Bus. In this way, a 15 bit address consists of the seven least significant bits of the Counter stage and either the eight most significant bits from the Counter stage (making up the A Word) or the eight bits from the B Word Address Counter stage (making up the B Word). Both words are set from the Data Bus and, as mentioned, selection depends on the level to the select inputs of U920 and U1020.

The least significant bit of the A Word Bus applied to U820 through U1630B is inverted with the presence of a HI AWRDLSB (A Word least significant bit) command. This is used when displaying both a digitized and real time waveform. Normally, a stored waveform is presented on the crt by reading the digital data at each of the sequential addresses generated by this circuitry and by displaying the corresponding analog level at a predetermined horizontal displacement on the crt. When displaying both realtime and stored waveforms, however, stored waveform data is read and displayed only at every other sequential address. When a sequential address is left unread, a portion of the realtime sweep is displayed. The resulting display is presented much like a vertical chop display as described in the Mainframe Logic description. When the address of the last point of the stored waveform has been generated, the display of stored data begins again. The data now read and displayed consists of those addresses previously unread. In this way, all data in even addresses is displayed, and then all data in odd addresses is displayed, this cycle continuing until the instrument's mode is changed.



DIGITIZER CLOCK

A special high-frequency clock is required for operation of the digitizer in this instrument. The Digitizer Clock circuit develops the necessary 10-MHz "Burst Clock", a series of 11 pulses, when data on the Data Bus indicates that digitizing of an acquired point is to occur.

A schematic diagram of the Digitizer Clock circuit is given on diagram 23 in Section 7, Diagrams and Circuit Board Illustrations. The schematic is divided by gray shaded lines separating the circuitry into major stages. These stage names are used to aid in identifying components and portions of circuitry discussed.

CLOCK/SOURCE SELECT

The Clock/Source Select stage consists of U1910A, U2000, U2100 and U2230D. Integrated circuits U2000 and U2100 make up an external clock divider while U2230D and U1910A provide selection of the clock source to the Clock Delay stage.

The external clock rate (Aux Gate B) from the 7B87 Time-Base unit (Ext-Clock input connector) applied to U2000 is divided by factors of two, four, and eight, and appear at the Q_A, Q_B and Q_C outputs of U2000 respectively. These three clock rates along with the original external clock are applied to U2100 and, depending on the control levels applied to its A and B Select inputs from the Acquire Word Bus, one of these four clocks appears at the 1Y output of U2100.

The clock source is selected by U1910A in much the same manner as just described for selection of clock rate by U2100. The levels present at the A Select input (set from the Acquire Word Bus) and at the B Select input, determined by the mainframe DTCSC (dual trace channel switch control) level, select one of the four clock sources at the inputs of U1910A to appear at its 1Y output. These four clock sources include the clock output from U2100, two Source Restart pulses, and an inverted Source Restart pulse.

When the A Select input level of U1910A from the Acquire Word Bus (bit 12) is HI, indicating that the digitizer is acquiring in the External Mode, the 1Y clock output of U1910A alternates between the selected clock output from U2100 and the pulse generated by U1900D (Source Restart stage) and inverted by U2230D, indicating that a point has been completely digitized as the DTCSC level alternates between HI and LO, respectively. In this way, both points acquired from a dual channel vertical plug-in may be digitized with one clock pulse from the horizontal plug-in. Initially, a clock applied at the 1C3 input of U1910A is transferred to the 1Y output and applied to the Clock Delay stage. This triggers the remainder of the digitizer clock circuitry to properly generate digitizing clock pulses. The generation of these pulses will be discussed in the following subsections. After these pulses are generated, a source restart pulse is generated by U1900D and applied to U1910A through U2230D. At this time, if the DTCSC has already switched to a LO level, this pulse appears at the 1Y output of U1910A and

http://manoman.sqhill.com

the Digitizer Clock circuit once again generates the clock pulses necessary to digitize another data point. In this way, the Digitizer Clock circuitry produces the required clock pulses to digitize the data from both channels of a dual-trace vertical plug-in with only one clock pulse from the A Horizontal time base.

When the A Select level is LO, indicating that the 7854 is in the Internal Acquire Mode, the output at pin 7 of U1910A may only be selected from its 1CØ and 1C2 inputs. These inputs are both derived from the source restart pulse previously mentioned so the DTCSC level at the B Select input of U1910A has no effect on the 1Y output level. In this manner, the Digitizer Clock circuit generates the eleven pulses required to digitize a data point, generates a Source Restart Pulse, and applies this pulse as a trigger to once again generate eleven more digitizing pulses. This cycle continues until the A Select level of U1910A goes HI. This results in a continual digitizing process at a rate as fast as electrically possible for this circuit.

CLOCK DELAY

The Clock Delay stage consists of U2210A, U2210B and their associated components. This stage turns off the analog scope portion of this instrument, initiates digitizing of a data point, and then turns the analog portion of the oscilloscope back on when digitizing is complete.

Initially, a clock pulse from the Clock/Source Select stage is applied to U2210A and U2210B. This pulse triggers both of these monostable multivibrators, and each produces a pulse whose width is determined by an external rc network. The pulse generated by U2210B is applied to the Z-Axis and Focus Amplifier circuit on diagram 13, and turns off the analog scope display. At The same time the pulse generted by U2210A is applied to U1900C of the Burst Counter stage and digitizing of a data point is initiated. When the pulse from U2210A ends, digitizing is terminated. At this time the digitized data is stored into memory. After this has occurred, the pulse from U2210B ends and the scope display is restored. The pulses generated by U2210A and U2210B are different lengths, and since both are initiated at the same time, the proper scope off - digitize - store - scope on sequence is always maintained.

SOURCE RESTART

The Source Restart stage consists of U1910B, U1900D and their associated components. It generates the Source Restart pulse to the Clock/Source Select stage.

The inputs to U1910B at 2CØ and 2C2 are derived from the Gated Oscillator stage and are HI when the circuit is not producing digitizing clock pulses. The input at 2C3 is tied to ground potential while that of 2C1 originates in the Clock Delay stage. The 2Y output is selected from these four inputs and depends on the levels of the A and B Select inputs (shown on U1910A of the Clock/Source Select stage).

When in the External Acquire Mode, the LO level from the 2C3 input of U1910B is applied to U1900D. Since U1910A and U1910B both switch together (when (and if) the DTCSC goes LO) the 2C1 input ($\overline{XYON}$ normally HI) is applied to U1900D through U1910B. This HI level produces a LO pulse at the output of U1900D and is applied to inverter U2230D. Since the 1C1 input has been selected by the A and B Select levels, this HI appears at the Y_1 output of U1910A, initiating another digitizing sequence.

When in the Internal Acquire mode (A Select LO), a HI level is applied to both the 2CØ and 2C2 inputs of U1910B from the Gated Oscillator stage when it has **generated eleven digitizing pulses. This HI level is applied to U1900D and at the end of this generated pulse (on the positive transition), the 1Y output applies a triggering** clock pulse to the Clock Delay stage, initiating another digitizing cycle. This occurs independent of the DTCSC level, as the 1CØ and 1C2 inputs of U1910A are tied together as are the 2CØ and 2C2 inputs of U1910B.

GATED OSCILLATOR

The Gated Oscillator stage is comprised of U1920A, U1920B, Q2010, Q2020, Q2021 and their associated components. This stage, when properly enabled, produces a repetitive 10-MHz clock at the output of U1900B applied to the Digitizer circuit (diagram 26).

The oscillator within the Gated Oscillator stage is made up of Q2020, Q2021 and their associated components, and operates as follows (assume that Q2020 is off and Q2021 is conducting).

Capacitor C2120 charges negative to a level of about -4.3 volts, forward biasing Q2020. This causes a rapid voltage rise at its emitter which is coupled through C2120 to the emitter of Q2021, reverse biasing it. Transistor Q2020 continues to conduct as C2120 now discharges through R2121. When this voltage at the emitter of Q2021 reaches about -8.2 volts, Q2021 turns on pulling the base of Q2020 to a more negative level, reverse biasing this transistor. Capacitor C2120 once again charges negative through R2113 and the cycle repeats itself. Nand gate, U1900B inverts this output and buffers it at a TTL level to the Digitizer circuit (diagram 26).

http://manoman.sqhill.com

Transistor Q2010 turns this stage off and on, depending on the logic level applied to its base from U1920B. When the base of Q2010 is LO, the transistor is turned on and C2120 is not allowed to discharge through R2113. This is the off state for the oscillator. When the base of Q2010 goes HI, the transistor is turned off and is essentially out of the circuit. In this state, the oscillator runs as previously described.

The gating of this clock is done by U1920A and U1920B. If the clock has previously been running but is now off, the $\overline{Q}$ output of U1920B applied to the D input of U1920A is HI and the $\overline{Q}$ output of U1920A is also HI since the last 10-MHz clock pulse applied to its reset input has set it to this level. When a digitizing sequence is to be performed, a pulse from the Clock Delay stage is applied to the clock input of U1920A causing the $\overline{Q}$ output of U1920A to go LO. This LO applied to the S (set) input of U1920B sets its Q output HI and turns on the 10-MHz oscillator. The Burst Counter stage counts these clock pulses, and when the proper number of pulses has occurred, it generates a LO level and a clock pulse to the D (data) and clock inputs of U1920B respectively, turning the 10-MHz clock off. Generation of these levels will be discussed in the Burst Counter stage description.

BURST COUNTER

The Burst Counter stage counts the 10-MHz output pulses from the Gated Oscillator stage and develops the necessary signals to turn the oscillator off after the preset number of pulses are counted. This stage is made up of U1900A, U1900C, U2030A and U2130.

Integrated circuit, U2130 is a programmable counter that counts down from the preset number applied to its data inputs. The logical levels applied to these inputs are set from bit 12 of the Acquire Word Bus either directly or through U1900A (inverted). The data bits at these inputs are latched into U2130 with the presence of a Start pulse at its Load input. A HI at the inputs of U1900C produces the Start pulse that loads the counter. This same pulse sets the Q output of U2030A HI and applies this to the Gated Oscillator stage. As the 10-MHz clock pulses are counted down from the preset number, a point is reached where the counter overflows and the borrow output of U2130 is applied to U1920B of the Gated Oscillator stage as a clocking pulse. At this time the level at the D input of U1920B (HI) is clocked to the Q output and thus to the base of Q2010. Since this level remains HI, the clock continues running. The next time U2130 overflows, the borrow output clocks U2030A and U1920B once again. Since the previous clock to U2030A caused its Q output to change states, the LO applied to the D input of U1920B is now transferred to the base of Q2010, stopping the 10-MHz clock.

When the output of U1900A is LO, the Q output of U2030A is set LO initially, so the first borrow output to U1920B turns off the 10-MHz clock. This ability to determine whether the clock will be stopped on the first or second borrow output enables the clock to produce either 11 or 22 digitizing pulses.

Eleven pulses are necessary to digitize a vertical or horizontal data point, so only 11 are needed at one time in the Y-T (vertical-versus-time) digitizing mode. When digitizing in the normal X-Y, (horizontal-versus-vertical) mode, or as in the case when digitizing both channels of a vertical plug-in unit in the Y-T mode, 22 pulses (two individual bursts of 11 pulses) are required. In the Y-T (realtime) mode, vertical data points are digitized sequentially at the rate of the clock applied from a 7B87 time base unit to the 7854 mainframe. Digitizing with any other type of time base may only be done in the normal (X-Y) mode. Digitizing in this mode is done in a random (for all practical purposes) manner.



DMA CONTROL

The DMA Control circuit generates the timing sequence and control levels necessary for DMA (direct memory access) devices, internal to the instrument, to take control of the instrument busses. A schematic of the DMA Control circuit is given on diagram 24, in Section 7, Diagrams and Circuit Board Illustrations. The schematic is divided by gray shaded lines separating the circuitry into major stages. These stage names are used to aid in locating and identifying the components and the portions of circuitry discussed.

Three distinct DMA modules exist within the 7854 system (digitizer, readout and display). These modules operate asynchronously with respect to the system microprocessor and the other modules. Each performs its specific operation at a rate completely independent of the others.

In the process of completing one cycle of its operation, each module must directly access memory. This DMA operation is initiated by the individual module asserting its bus request to the DMA Control circuit, requesting use of the system busses as it requires them. These requests are synchronized to the system microprocessor by latching all pending requests on Φ4 of the system clock and checking requests on the following Φ1. The latched requests are prioritized and a DMA request is sent to the microprocessor indicating that a DMA module requires service.

http://manoman.sqhill.com

Memory cycles must always be completed so, on the next non-memory cycle, the microprocessor signals the DMA Control circuit that the system busses are available for DMA use. The identity of the highest priority requester has been encoded and is now decoded to issue a bus grant to the requesting module. DMA modules may only use the system busses when they are granted specifically to them. The requesting module, sensing that the busses are now available to it, signals the DMA Control circuit with a $\overline{\text{MEM}}$ level when it is ready to use the busses. (Since the digitizer requests use of the busses before it is actually ready to use them, this "tell me when you're ready" approach is required.) This $\overline{\text{MEM}}$ level is latched on Φ2 of the system clock and up until this time, bus grants may be changed depending on the priorities of bus requests present in the system.

As a DMA module begins using the system busses, its bus request (and thus its bus grant) is latched for the remainder of the cycle to prevent a higher priority bus request from interrupting this memory cycle (all memory cycles must be completed once initiated to ensure valid results). As the DMA cycle nears completion, the DMA Control circuit issues a $\overline{\text{RBR}}$ (remove bus request) command to all modules. The module with the active bus grant recognizes that this $\overline{\text{RBR}}$ is directed to it and removes its bus request if it doesn't require another DMA cycle. Removing its bus request allows a lower priority DMA bus request to be serviced in a similar manner, if present.

BUS REQUEST LOGIC

The Bus Request Logic stage consists of U120, U130, U300A and R130. The Bus Request levels applied to the D inputs of U130 from the digitizer ($\overline{\text{BRDIG}}$), the readout ($\overline{\text{BRRO}}$) and the display ($\overline{\text{BRDSY}}$) circuits are clocked into U130 by the rising edge of Φ4 of the 3-MHz free-running clock. When enabled by a LO level at its EI input from inverter U300A, U120 encodes the highest priority LO level appearing at its inputs into a 3-bit binary code. Normally U120 is enabled because the $\overline{\text{RESET}}$ (system reset) level applied to U300A is only LO during power up. These 3 bits, representing the identity of the highest priority bus request pending, are applied from U120's A outputs to the Bus Grant Logic stage. Any time a LO level is applied to one of the inputs of U120 and the IC is enabled, a LO GS output is generated, resulting in LO $\overline{\text{DMAREQ}}$ (DMA request) This tells the microprocessor that a DMA device requires service.

BUS GRANT LOGIC

The Bus Grant Logic stage consists of U220 and U230. This stage generates bus grant levels to the digitizer ($\overline{\text{BGDIG}}$), readout ($\overline{\text{BGRO}}$) and display ($\overline{\text{BGDSY}}$) circuitry. The bus grants are permission for each respective module to use the instrument busses for a transfer of a word to or from memory.

The highest priority bus request applied to the Bus Request Logic stage is encoded and applied from that stage to the D inputs of U230 of the Bus Grant Logic stage. When the enable input levels at pins 4 and 13 are HI as determined by the DMA Timing Logic stage, the data levels applied to the D inputs of U230 appear at the corresponding Q outputs. When the enable goes LO, the outputs do not follow the inputs but are latched at their levels immediately prior to the transition. These output levels are applied to the A, B and C inputs of U220. This IC decodes the information at these inputs, resulting in a LO at one, and only one, of the outputs when properly enabled by the DMA Timing Logic stage. These LO outputs are the bus grant signals to the various DMA devices and result only when the microprocessor has suspended its operation after recognizing that a DMA device requires service, allowing that DMA device to take control of the instrument busses.

DMA TIMING LOGIC

The DMA Timing Logic stage generates the enable levels for the Bus Request Logic and Bus Grant Logic stages as well as the $\overline{\text{WE}}$ (write enable) and $\overline{\text{RBR}}$ (remove bus request) to the memory (RAM and ROM) and DMA (Digitizer, Readout Acquire and Vertical Display and Control) circuits respectively. This stage consists of U100A, U100B, U100C, U110A, U110B, U200C, U210B, U300D, U310A, U310B, U310C, U310F, U320B, C110, and R111.

When power is initially applied to the instrument, the $\overline{\text{RESET}}$ level from the Microprocessor and Control circuit (diagram 28) goes LO during a portion of the power up sequence. This LO sets the $\overline{\text{Q}}$ output of U210B LO and that of U320B HI (through U100A). At the same time, this disables U120 of the Bus Request Logic stage and U220 of the Bus Grant Logic stage. After power up, the $\overline{\text{RESET}}$ level goes HI and remains at that level for the rest of the instrument's operation. This HI is inverted by U300A and enables U120 by pulling the EI pin LO.

The HOLDA (hold acknowledge) level from the Microprocessor and Control circuit is normally LO (when the microprocessor has control of the instrument busses). This LO level applied to U100B results in a LO at its output. This is inverted by U110A and enables U230 of the Bus Grant Logic stage. When enabled, U230

http://manoman.sqhill.com

transfers whatever is at its D inputs to the corresponding Q output. Since the $\overline{\text{RESET}}$ level is now HI, U120 is now enabled and checks for a LO level applied to it by U130. If one or more bus requests are present, the GS (group strobe) output of U120 goes LO, producing the $\overline{\text{DMAREQ}}$ level to the microprocessor, indicating that a DMA module requires service. At the same time the data from the A outputs of U120 is applied through U230 to U220 as previously described.

When the microprocessor has recognized that a DMA request is pending, a HI HOLDA (hold acknowledge) level is generated on the next non-memory cycle, indicating to the DMA Timing Logic stage that it has suspended its internal operations and does not require the instrument busses. This HI HOLDA level applied to U310B enables U220 and the proper bus grant is generated. Inverter U310F is also enabled at this time and the LO Q level of U320B applied to its input results in a HI $\overline{\text{WE}}$ (write enable) level.

This HI HOLDA level applied to U310B also results in a LO applied to U200C. When the readout or display systems are the DMA devices recognized by the microprocessor, the $\overline{\text{MEM}}$ level applied to U200C goes LO soon after the bus grant is given. When the digitizer is the highest priority DMA device requesting service, a possibility exists that it may not be ready to transfer its data when granted the instrument busses (this is because the digitizer requests the busses before it actually needs them to speed up transfer of digitized data). In this case the $\overline{\text{MEM}}$ level goes LO, indicating that it is ready to use the bus, some time after the bus grant is given. In either case, when both the HOLDA level is HI and the $\overline{\text{MEM}}$ level applied to U200C is LO, the output of U200C applied to the D input of U210B goes LO. On the rising edge of the 3-MHz Φ2 clock U210B's $\overline{\text{Q}}$ output toggles HI.

At this time, all inputs to U110B are HI, generating a LO $\overline{\text{RBR}}$ (remove bus request) to all DMA devices. The DMA device that received the bus grant recognizes this $\overline{\text{RBR}}$ level (by gating the remove bus request pulse with the active bus grant) and so removes its bus request.

When the $\overline{\text{Q}}$ output of U210B toggles HI, all inputs to U100B are at a HI level, producing a HI applied to U110A. This results in a LO applied to the enable inputs of U230, latching the present data at its inputs into the device. This is the data representing the highest priority bus request and is applied to U220.

Since the $\overline{\text{RESET}}$ and HOLDA levels applied to U100A are HI, the action of the $\overline{\text{Q}}$ output of U210B toggling HI results in a HI level applied to the R (reset) input of U320B. On the next rising edge of the 3 MHz Φ1 clock, the outputs of U320B toggle and a HI is applied to U310F. Since this inverting buffer is enabled, a LO $\overline{\text{WE}}$ level results.

At the same time the Q output of U320B toggled HI, its $\overline{\text{Q}}$ output applied a LO to inverter U310A. Capacitor C110 now charges to a HI level through R111. The next rising edge of the 3 MHz Φ1 clock causes U320B to toggle, resulting in a HI $\overline{\text{WE}}$ level (disabling memory) and a HI at its $\overline{\text{Q}}$ output (U210B can't toggle to reset U320B because its D input remains LO). This HI at the $\overline{\text{Q}}$ output of U320B is applied to U310A and U100C. Since C110 was charged to a HI level and it can't discharge instantly to the LO level now present at the output of U310A, a short positive pulse results at the output of U100C. This is inverted by U300D and applied to U100B. This negative pulse results in a pulse applied to inverter U110A. The resulting positive pulse applied to U230's Enable inputs allows another encoded bus request to be latched into this IC and be applied to U220's inputs. If a new bus request is present, U220 decodes it and the microprocessor allows the DMA device to be serviced.

When the microprocessor determines that it no longer is required to allow DMA devices control of the instrument busses and that the present DMA cycle is complete, its HOLDA level returns to a LO state. This disables U220 and U310F, resets U320B through U100A, and applies a LO to the D input of U210B. On the rising edge of the 3 MHz Φ2 clock, the $\overline{\text{Q}}$ output of U210B changes states and the circuit is once again in its initial state. Subsequent DMA requests are handled in a similar manner.



DIGITIZER SWEEP COUNTER

The Digitizer Sweep Counter circuit is used to determine if enough complete sweeps have occured to represent a valid waveform. A schematic of the Digitizer Sweep Counter stage is given on diagram 25, in Section 7, Diagrams and Circuit Board Illustrations. The schematic is divided by gray shaded lines separating the circuitry into major stages. These stage names are used to aid in identifying and locating the components and portions of circuitry discussed.

http://manoman.sqhill.com

ACQUIRE WORD REGISTER

The Acquire Word Register stage is made up of U200D, U2230F and U1820. It latches the eight highest order bits from the Data Bus into U1820 with the presence of a LO $\overline{\text{AMDWRD}}$ (A mode word) and a LO $\overline{\text{WE}}$ (write enable) at the inputs of U200D. This produces a clock to U1820 through inverter U2230F, latching these bits into U1820 and applying them to the Acquire Word Bus. Portions of this word are read from this bus by other circuitry within the instrument to determine the mode in which they are to operate.

SWEEP COUNTER

The Sweep Counter stage consists of U1000 and U1100. This stage is an eight-bit pre-settable counter that counts the number of complete sweeps that are detected by the Complete Sweep Detector stage. The eight least significant bits from the Data Bus are loaded into the counter ICs with the presence of a LO level at their load inputs from U200D. Each succeeding pulse from the Complete Sweep Detector stage applied to input pin 4 of U1100 causes the counter to count down from the preset number. When the counter has counted to zero, the next pulse causes the counter to produce a LO pulse at the borrow output of U1000. When this pulse returns to its HI state, the Acquire Stop stage is clocked and sweep counting terminates.

GATE SELECT

The Gate Select stage is made up of U1720 and U2220. It determines, depending on the logic levels applied to its A and B Select inputs from the Acquire Word Bus, the source of the sweep gate pulse to the Complete Sweep Detector stage. The A gate (ASWPG) and B gate (BSWPG) signals are selected when acquiring using the A and B Horizontal plug-ins respectively. The flip-flops at the 2CØ and 2C1 inputs of U1720, made up of individual nor gates (U2220), are used to condition the ASWPG and BSWPG signals, keeping them free from multiple transitions on their falling edges. This is accomplished by having the corresponding Holdoff signal (A or B) reset the flip-flop at the end of the sweep before the erroneous transitions occur. The Ext Stop (external acquire stop) signal from the Delay Gate B of a 7B87 time base unit is selected when acquiring in the External Acquire Mode and is used only when acquiring samples in sequential fashion, at a rate determined by the time base.

COMPLETE SWEEP DETECTOR

The Complete Sweep Detector stage is made up of U1610A, U1610B, U1710A, U1710C, U1830A, U2230A, U2230B and C1610. This stage detects the beginning and end of a sweep gate pulse and, if detected in the proper order (beginning before end), produces a clock pulse to the Sweep Counter stage, indicating that a complete sweep has occurred.

Upon power up, the system $\overline{\text{RESET}}$ input level applied to U1400A goes LO. This applies a LO level to U1710A, resulting in a LO at its output. This is applied to the R (reset) input of U1610A to reset it and also to U1710C. The resulting LO at the output of U1710C is applied to the reset input of U1610B and resets its Q output to a LO.

The first Gate pulse from the Gate Select stage applied to the Complete Sweep Detector stage after the reset level returns to HI, causes the Q output of U1610A to change states, going HI, coincident with the leading edge of this pulse. The HI levels at pins 1 and 2 of U1710A, determined by bits 13 and 12 of the Acquire Word respectively, along with the HI level applied to pin 13 of U1710A produce a HI at the output of U1710A. This HI, in conjunction with the HI Q level from U1610A and the HI Q level from U1610B, applies a HI to the R input of U1610B through U1710C. This enables U1610B to change states when clocked and does so coincident with the end of the Sweep Gate pulse applied through U2230B to its clock input. The Q output of U1610B goes HI while the $\overline{\text{Q}}$ output discharges C1610 until U1710C senses this level as LO. The resulting LO at the output of U1710C is applied to the reset input of U1610B, resetting the Q output LO. This pulse is applied to the Sweep Counter stage and signifies that a complete sweep has occurred.

When using a 7B87 in the External Acquire Mode, the Acquire Word bit 12 applied to U1830A and U2230A is HI, allowing the LO level resulting from both inputs of U200D being LO, to reset the Q output level of U1830A to a LO level. Integrated circuits U1610A and U1610B are reset as previously described. After the reset level applied to U1830A returns to HI, the first Full Once pulse generated by the 7B87 plug-in clocks the Q output of U1830A HI. The HI applied to U2230A from the Acquire Word Bus results in a LO at the S input of U1610A, setting its Q output HI. With the end of the Ext Stop (external acquire stop) gate pulse applied through U1720 to U2230B, U1610B is clocked and a complete sweep pulse is produced and applied to the Sweep Counter stage. In the 7B87 External Acquire Mode, only the end of a gate pulse is necessary to properly generate a complete sweep pulse. This is true because acquisition of all data in this mode is done sequentially, unlike Internal Acquisition.

ACQUIRE STOP

The Acquire Stop stage generates the $\overline{\text{Acquire Done Clear}}$ signal to stop signal acquisition (digitizing) when either it senses that the Sweep Counter has determined that memory is full, the AQS ABORT (acquire single-shot abort) pushbutton on the rear panel has been pressed or when a GPIB device needs to interrupt acquisition. This stage consists of U1400A, U1530B, U2230C, U2030B and R2020.

http://manoman.sqhill.com

A LO level applied to an input of U1400A from either the $\overline{\text{RESET}}$ input or from U200D applies a LO level to the R (reset) input of U2030B, resulting in a HI $\overline{Q}$ output level. This HI level indicates that the digitizer system should be acquiring data points. When a preset number of sweeps have occured, the Sweep Counter stage produces a Borrow output pulse, indicating that a preset number of sweeps have occurred. As the Borrow output pulse returns to its normally HI state, U2030B is clocked. The Acquire Done Clear level may also be set LO to stop digitizing by applyig a LO level to the S (set) input of U2030B through the rear-panel AQS ABORT pushbutton or by a GPIB device asserting a LO $\overline{\text{IGPIB}}$ (GPIB interrupt) level.



DIGITIZER

The Digitizer circuit accepts analog voltage levels from the Vertical and Horizontal Sampler circuits (diagram 20) and converts them to a corresponding 10-bit binary code. These individual 10-bit words are stored in memory (RAM) and used by the microprocessor to reconstruct a complete stored waveform. The digitizer used in this instrument is a "successive approximation" A/D converter and is used to obtain both high resolution and high speed conversions. In use, a successive approximation A/D converter presets the reference level of a comparator to one half of the allowable range for inputs (average voltage level of maximum and minimum allowable input levels). The analog input voltage level is compared to this set reference level and one bit of digital information is set, indicating a greater than or less than condition, depending on the result of this comparison. A shift register is advanced and a new reference level is set for the comparator. This new reference level is equal to either the sum or the difference of the initial reference value and one-half of this value. Depending on the result of this new comparison, a new bit of digital data is set. This process continues, always adding or subtracting a voltage level of one-half the previous value added or subtracted, until all data bits are set. The combination of all set data bits is the digital representation of the applied analog signal.

A schematic of the Digitizer circuit is given on diagram 26 in Section 7, Diagrams and Circuit Board Illustrations. The schematic is divided by gray shaded lines separating the circuitry into major stages. Sub-headings in the following description use these stage names to aid in identifying and locating components and portions of circuitry discussed.

COMPARATOR

The Comparator stage consists of U510, Q513, Q514 and their associated components. It compares the input analog level at pin 2 of U510 to the step-analog level generated by the combination of the Approximation Generator and D/A Converter stages applied to it at pin 3. Its output, at pin 7, is used to set one bit of data in the Approximation Generator stage. Transistors Q513 and Q514 buffer and invert this logic level. This resulting signal is applied to the Approximation Data latch stage to set one bit of serial data.

APPROXIMATION GENERATOR

The Approximation Generator stage consists of Q556, U519B, U554C, U554D, U569A, U569B, U570, U575, U580, U585, U590, U595 and their associated components. This stage, in conjunction with the D/A Converter stage, produces the varying analog-step voltage to which the analog input voltage is compared in the Comparator stage.

A clock pulse applied to U569B, U570 and U519B, through U503D and U503A, produces a HI Q output level at pin 9 of U569B, assuming that the R (reset) input level at pin 13 of U569B is HI. This reset level is HI only when the clock pulse to U519B is HI and the Q10 output of U570, a 10-bit shift register, goes HI due to a shift occurring. At this time, the output of U519B goes HI, clocking U569A to a HI $\overline{Q}$ output level at pin 6. The next clock pulse to U569B produces a HI Q output level applied to the D (data) input of the shift register, U570. At the same time, U570 is clocked and this HI level at the D (data) input of U570 is transferred to its Q1 output, pin 11. This changes the set level, pin 4 of U569A, to a LO, forcing its $\overline{Q}$ output LO. This is applied to U569B as a LO reset pulse and the Q output of U569B goes LO. On the next clock pulse, the Q1 level of U570 goes LO due to the LO at its D input. The previously HI level of Q1 is shifted to the Q2 output. Each consecutive clock pulse shifts this HI level by one step until the HI level reaches the Q10 output, at which time the entire cycle repeats itself. This results in a continuous stepping of a HI output bit from output Q1 all the way through Q10 and then back to Q1, all steps occurring coincident with the applied clock.

The data latches, U575 through U595 in the Approximation Generator stage, initially transmit the logic level applied to their set input pins 5 and 12, to their output pins 2 and 15, respectively (after a reset pulse from the previous cycle is applied at pins 4 and 13 to reset output pins 2 and 15 to their LO state). Assume that all latches have just been reset and a HI level has just resulted at the Q1 output of U570. The output at pin 2 of U575 (the most significant bit) goes to a HI state

http://manoman.sqhill.com

while the remainder of the latch outputs are LO. The D/A Converter stage "reads" this 10-bit data word and produces an output voltage, used as the comparator stage's reference, equal to one-half of the allowable input range for the comparator stage (see general Digitizer description above). This level is compared to the analog input level of the Comparator stage and the logic level output of the comparator is applied to all of the data inputs of the data latches of the Approximation Generator stage. When this comparator output level is HI, an input voltage greater than (more positive) the approximated reference is indicated; when LO, an input more negative than the reference is indicated.

On the next clock pulse to U570, the internally stored HI bit is shifted to the next most significant output, Q2 at pin 12 of U570. This shows up as a HI level at pin 15 of U575, which is fed to the clock input, pin 6, for the MSB (most significant bit) latch. This stores the level present at the D inputs in the MSB latch. The new 10-bit word applied to the D/A converter stage is translated to an analog voltage level equal to either the sum or the difference of the original reference voltage and one-half of that value (1½X if the MSB was set HI; ½X if set to LO). This new reference level is compared to the analog voltage at the input of the comparator stage and a new comparison is made. The result of this comparison is applied to the D inputs of all the data latches of the Approximation Generator stage. The next clock pulse shifts the HI bit in the 10-bit shift register, U570, to the next most significant bit and latches the digital result of this new comparison in the 2nd MSB latch. This process continues, always adding or subtracting one-half of the value previously added or subtracted to the reference pin of the comparator, until all 10 bits of the Approximation Generator data latches have been set (see Fig. 2-35). This 10-bit word digitally represent the voltage level at the input of the comparator stage. After the 10th comparison, the latches are reset and the next clock restarts the cycle. Components U554D, R599 and C599 delay the shift of the HI bit to Q10 of U570 to produce the ESAR (end from successive approximation register) pulse used by the Digitizer Control Logic circuit (diagram 21).

D/A CONVERTER

The D/A Converter stage consists of U610, U620, U621A, U621B, U630A, U630B, and their associated components. This stage receives a 10-bit data word from the Approximation Generator stage and converts this data to a unique analog voltage level. This is then applied to the Comparator stage as the reference level for the next sequential comparison.

The data bits that are sequentially set and latched by the Approximation Generator stage are applied to the B inputs of U610 and U620. These 10 bits of data are converted (five by U610 and five by U620) to the unique voltage levels at their V_{out} outputs, dependent on the five-bit binary code applied to their B inputs. These two voltages are summed and applied to the Comparator stage. Resistor R620, along with the LSB Match adjustment, R623, reduces the effect that the output of U620 has in this summation by a magnitude of 32 in relation to that of U610. Adjusting R623 accurately sets the magnitude for each incremental analog step by varying the reference current in U620. Inverters U621B and U621A are used to set reference currents and thus the voltage output limits of U610 and U620 respectively. The output of this stage at TP620 is limited by these references to a maximum of +1.5 volts and a minimum of −1.5 volts. Between these limits, there are 1024 unique analog voltage step levels that may result at this output, dependent on the 10-bit data word applied to the stage.

APPROXIMATION DATA LATCH

The Approximation Data Latch stage is made up by U503B, U520, U521, U522, U554B, U554E, U554F and their associated components. This stage stores the results of the 10 sequential comparisons made by the Comparator stage and buffers them to the Data Bus when enabled by the Digitizer Control Logic circuit (diagram 21).

Each comparison made by the Comparator stage results in a logic level at the output pin 7 of U510 that is inverted by Q513 and applied to pin 6 of U503B, the input of the Data Latch stage. The 10-MHz Φ1 clock is delayed by U503D, U503A, U554B, R553 and C553 and is applied to the clock input of U520, a 10-bit shift register. This ensures that the Comparator stage has had time to do its comparison and that the data at the D input of U520 has settled and is valid. Each time this delayed clock goes HI, a new bit of data is entered into the register and previous bits are shifted to the next output. After 10 bits of data are stored and shifted, the $\overline{H}$/V Q input from the Digitizer Control Logic circuit is applied to the clock input, pin 11, of U521 to latch these data levels. The $\overline{DMEM}$ (digitizer memory) enable level from the Digitizer Control Logic circuit enables the buffers within U521 and U522 and the 10-stored data bits, representing the value of the analog input to the Comparator stage, are buffered to the Data Bus.

http://manoman.sqhill.com

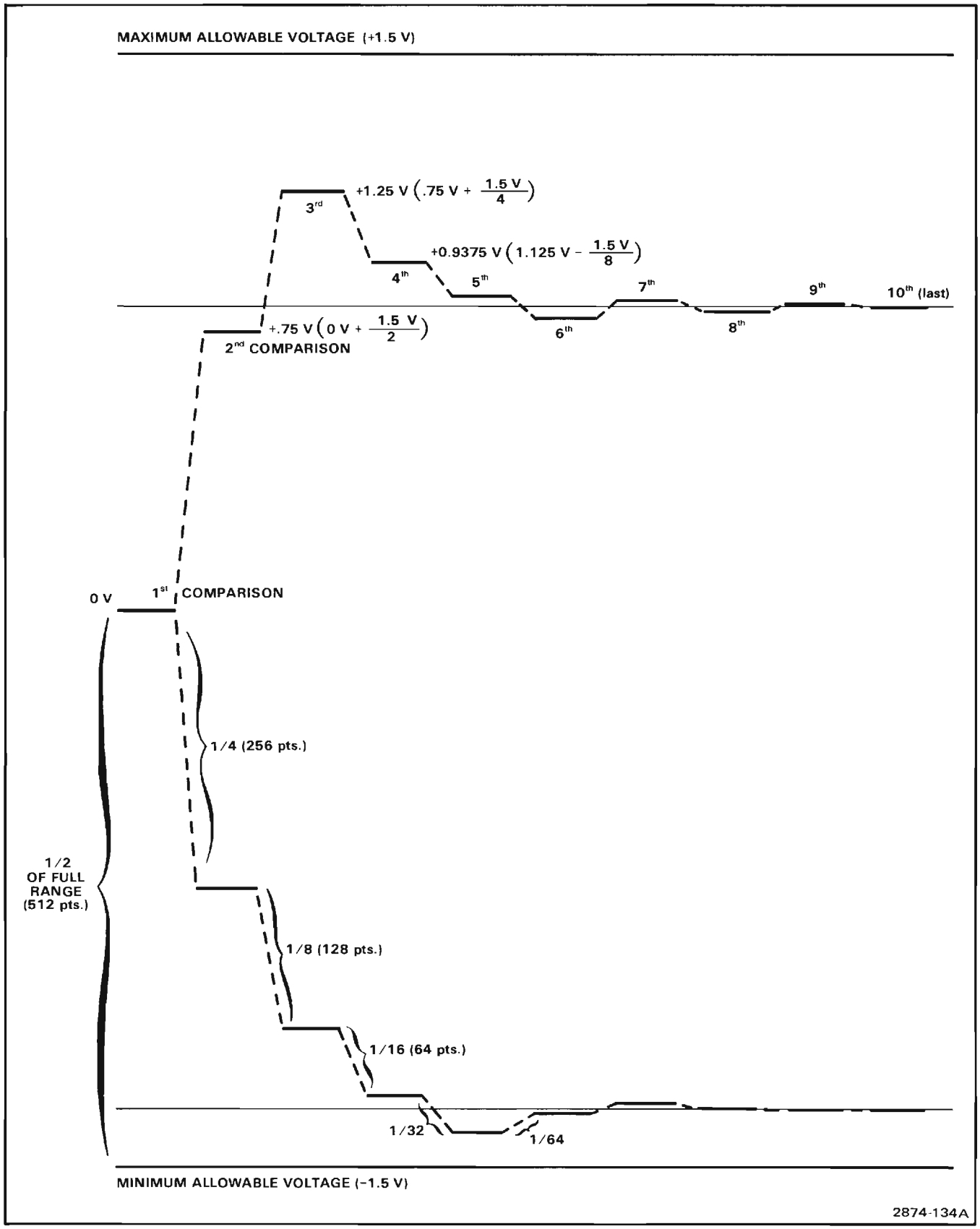

Figure 2-35. Comparison sequence of Successive Approximation Register for two random voltage samples.

http://manoman.sqhill.com

VOLTAGE REFERENCE

The Voltage Reference stage consists of U533 and its associated components. This stage sets both the +1.5 volt reference and −1.5 volt reference for the D/A Converter stage. Inverter U533 is connected as a feedback amplifier and both reference voltages are taken from its feedback network.

CLOCK CONDITIONER

The Clock Conditioner stage is made up of U503A, U503C and U503D. This stage shapes (narrows) and delays the clock pulse to the Comparator stage. By inverting the clock pulse and applying it to U503C along with the normal clock pulse, a short duration pulse is produced at the output of U503C at the end of the normal clock pulse. Since the inverted clock applied to U503C has a one-gate longer electrical path than the normal clock, the period of the resultant clock pulse at the output of U503C is equal to the propagation delay time through U503D (see Fig. 2-36).

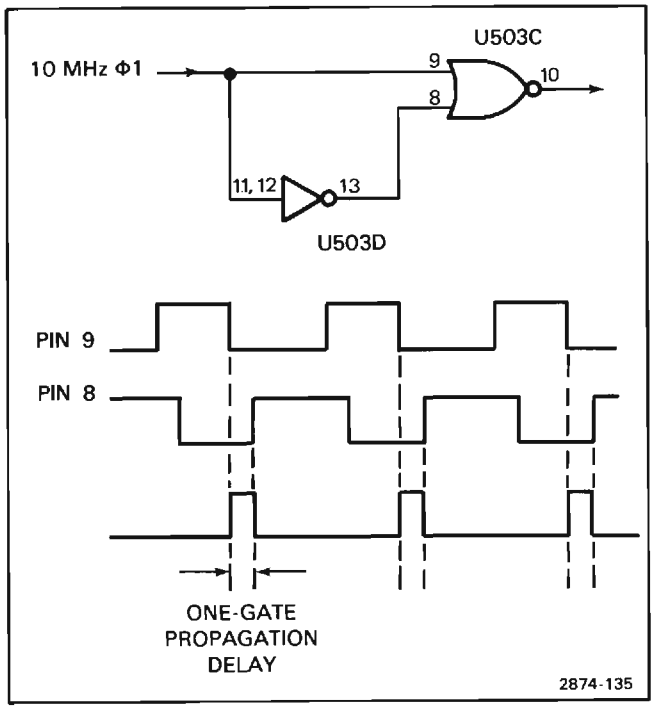

Figure 2-36. Clock Pulse delay.

27 SIGNATURE ANALYSIS

The Signature Analysis stage shown on diagram 27 is used for troubleshooting the 7854. It is only used in conjunction with the 067-0911-00 7854 Test Interface, consisting of a Diagnostic Memory board containing diagnostic firmware, cabling to the Microlab 1 (also required), a personality card for the Microlab 1 and signature tables for the version of firmware used. A description of the keyboard circuitry shown on diagram 27 is given in the Keyboard System description.

The stage is made up of a signature clock and a software controlled Start/Stop command generator. By sampling levels at a node when certain blocks of circuitry are being exercised in a specific manner by the diagnostic package, a numerical "signature" is developed. When compared to a table of known good signatures, problems can be isolated. By positioning jumpers P220 and P1410 to either the DMA or microprocessor positions, signatures may be developed on either DMA or microprocessor cycles respectively.

The clock circuit consists of U110A, U200A, U1000B, U1410A, U1410B, U220B, U520A and U520D. When the $\overline{MEM}$ level at the D input, pin 2 of U110A is LO, indicating a memory cycle, the 3 MHz Φ1 input clocks the $\overline{Q}$ output applied to U220B HI. If the HOLDA (hold acknowledge) level is LO, indicating that the microprocessor has control of the memory, U520D also applies a HI to U220B. If the WAIT command at pin 1 of U520A is LO, indicating that an extended memory cycle is now complete or that a normal memory cycle has occurred, the input at pin 3 of U220B is HI. These three HI levels applied to U220B result in a LO applied to U1410B. On the falling edge of phase 4 of the 3-MHz clock applied to U1410B, the $\overline{Q}$ output of the one-shot, U200A, goes LO to set U200A and produce the negative going signature clock. Since U110A is now set, it is ready for the next memory cycle.

If the HOLDA level is HI, indicating that a DMA (direct memory access) device is controlling the memory, the signature clock will not run unless jumpers P220 and P1410 are moved to the DMA position. Operation of the clock is the same as just described except that the $\overline{WE}$ (write enable) level, always required to be LO for a DMA operation, either enables or disables the 3-MHz Φ4 clock that produces the signature clock.

U1400 and U110B provides a means for software to produce the Start and Stop levels necessary for signature analysis. Address bits 13, 14 and 15 on the Address Bus

http://manoman.sqhill.com

cause one of the 8 outputs of U1400 to go LO when a CRUCLK pulse is applied to the enable input at pin 6. This CRUCLK level is set by diagnostic firmware and is used to enable the Start/Stop triggers.

A LO output at pin 10 of U1400 is applied to U110B and produces the HI Start/Stop pulse to the external signature analyzer at pin 9 of U110B while a LO at pin 12 of U1400 resets pin 9 of U110B LO, generating the Start/Stop pulse.

As previously mentioned, a signature for a node is produced by sampling the levels at the node between Start and Stop commands. The timing of these commands, as well as the means in which circuitry is exercised is dependent on the firmware residing on the 7854 Diagnostic Memory Board (067-0961-00) used for troubleshooting. Actual signatures are compared to a table of signatures known to be correct for the version of diagnostic firmware in use. Differences in these signatures indicate that signals at the node in question are incorrect and should be further investigated.



MICROPROCESSOR AND CONTROL

The Microprocessor and Control circuit is shown on diagram 28 in Section 7, Diagrams and Circuit Board Illustrations. The diagram is divided by gray shaded lines separating the circuitry into major stages. The following description uses these stage names to aid in locating and identifying the components and portions of circuitry discussed.

The microprocessor used in this instrument is a single chip 16-bit central processing unit (CPU) with separate address and data busses as well as individual inputs and outputs for control functions. The required operating voltages for the microprocessor and its related circuitry are different than those used elsewhere in the instrument, and so are developed from other supplies by the Auxiliary Regulator circuit (diagram 38).

CLOCK

For proper operation of the microprocessor IC, U700, a four phase clock with specific relationships must be applied to the clock inputs at pins 8, 9, 25 and 28 of U700. These clock pulses are developed by U920 and its associated components.

The crystal between pins 18 and 19 of U920 sets the 48-MHz oscillator frequency for the 4 phase Clock generator stage which is divided internally be a factor of 16 to obtain each of the four phases of the 3-MHz clock. Each phase of the 3-MHz clock lags the preceding clock phase by 90 degrees to provide 4 non-overlapping clock pulses, each with a duty cycle of about 25 percent (see Fig. 2-37). The resonant lc tank circuit between pins 1 and 2 of U920 prevents the oscillator from oscillating at some subharmonic (a lower frequency) or harmonic (a higher frequency) of the designed operating frequency of the crystal. The clock outputs at pin 8, 9, 11 and 12 of U920 are 12-volt level clocks and drive the microprocessor while the inverted clock outputs at pins 6, 7, 14 and 15 of U920 are TTL levels. These are inverted by the buffers within U1120 and drive other digital circuitry within the instrument that require the various phases of the 3-MHz clock at TTL levels.

The PUP (power up) command input at pin 3 of P105 from the Converter/Rectifiers circuit (diagram 15) resets the microprocessor when power up occurs. Initially, all supplies are at ground potential and the PUP level is LO. The PUP level remains LO until all supplies have come up to their proper voltages. This LO turns Q100 on as soon as the $+5V_D$ supply comes up and a LO FFD input level is applied to U920 through U520E, U220C and U520F. This LO is clocked through U920 to its FFQ output coincident with its Φ3 clock, resetting the microprocessor. The PUP level remains LO for about 3 seconds, as determined by the Power Up Logic stage of the Converter/Rectifiers circuit. When this PUP level goes HI, indicating that all supplies are at their proper voltages, Q100 is turned OFF

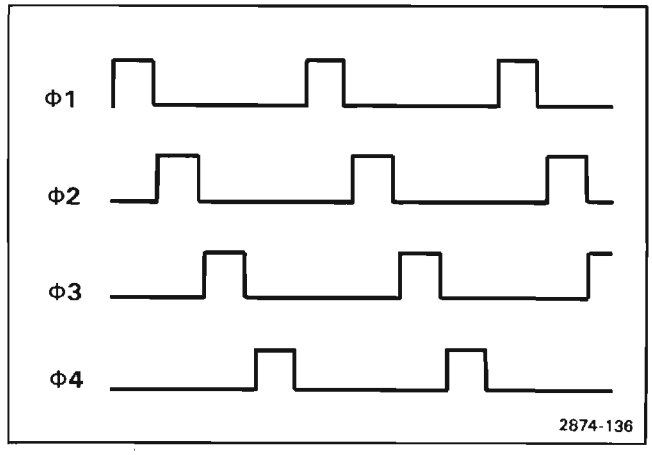

Figure 2-37. Timing relationships of the four phase, 3-MHz clock.

http://manoman.sqhill.com

and the $\overline{\text{RESET}}$ level to the microprocessor goes HI. This sequence ensures that all instrument power supplies are up and settled before any operation is attempted. The system reset may be disabled by disconnecting jumper P1120.

INTERRUPTS AND CONTROL

The Interrupts and Control stage provides interface to and from microprocessor, U700, enabling it to change its operational mode to (1) service it peripherals, (2) control its bus and memory functions, and (3) ensure proper timing sequences for data transfer and manipulation. All inputs associated with P130 are for test purposes only and will not be described.

The Ready command applied to pin 62 of U700 through U1110C, tells the microprocessor that the memory will be ready to read or write during the next clock cycle. If, during a memory operation, the proper memory set-up conditions have not been met, this line is LO and the microprocessor enters a wait state. Internal operations of the microprocessor are suspended until the memory systems indicate that they are ready to proceed.

The $\overline{\text{TSTHOLD}}$ command, if present, from the external Microlab 1 test fixture (used only for troubleshooting) is applied to input pin 13 of U900, and is transferred to its output, pin 12, at the beginning of the Φ4 clock. This normally HI command and the normally HI $\overline{\text{DMAREQ}}$ command from the DMA Control circuit (diagram 24) are applied to the inputs of U1000C. In this configuration, either the $\overline{\text{TSTHOLD}}$ or the $\overline{\text{DMAREQ}}$ command may produce a LO at the $\overline{\text{HOLD}}$ input, pin 64, of the microprocessor. The DMA enable (DMAEN) jumper, P1000, is used to determine if the $\overline{\text{DMAREQ}}$ can control the $\overline{\text{HOLD}}$ function. This jumper is removed to disable DMA requests for test purposes. In the hold state, the address and data busses and the memory control outputs ($\overline{\text{WE}}$, $\overline{\text{MEMEN}}$, and DBIN) are forced to a high-impedance state, allowing DMA (direct memory access) devices to have control of the data, address and control busses for data input and retrieval functions.

Interrupt commands from various portions of the instrument are prioritized and encoded by U1200. The highest priority active LO input is encoded onto 3 lines, IC0, IC1 and IC2. The GS (group strobe) output of U1200 goes LO when an interrupt is present at one of the inputs of U1200. This GS command, is applied to U1100D and develops the $\overline{\text{INTREQ}}$ (interrupt request) signal. This interrupt request level and the encoded interrupt address, as well as the $\overline{\text{TSTHOLD}}$ command and CRUIN level are applied to their related microprocessor inputs on Φ4 of each clock cycle through U900 as mentioned in the $\overline{\text{HOLD}}$ command description. The CRUIN level may be set by an external jumper while the interrupts may be prioritized or disabled using the external jumpers at the inputs of U1200.

With the presence of an interrupt request at pin 32 of the microprocessor IC, U700, the priority interrupt code levels at input pins 33, 34, 35 and 36 are internally stored and compared to a register containing the priority code of the present instruction being executed. If the priority of the interrupt is greater than the priority of the present instruction, upon completion of the instruction, the interrupt sequence is initiated. Since the priority encoder continuously monitors and encodes all interrupt requests, and the interrupt codes to the microprocessor are updated every clock cycle by U1200, the microprocessor always acts upon the highest priority request first. If the interrupt is not of sufficient priority, the microprocessor will ignore it. Since the interrupt has not been serviced, the interrupt request will remain active (LO) until the program goes to a state of sufficiently low priority to accept the request.

If, during the servicing of an interrupt request, one of higher priority is encountered, the higher priority is serviced and then the microprocessor returns to complete the service of the lower priority request. Upon completion of the request, normal operation resumes until an interrupt of sufficient priority is once again encountered.

The 50-Hz clock input at pin 3 of U320A generates the highest hard wire programmed interrupt of those available, so every 16-20 milliseconds, it is serviced. This is used to display digitized waveforms with the real time clock developed by the Readout Acquire system (see diagram 31). This interrupt is reset by the $\overline{\text{RRTC}}$ (real time clock reset) command developed by U1310 in the CRU Outputs stage, whose operation will be discussed later in this section.

The CRUIN input at pin 31 of microprocessor U700 acts as an input to set specified bits of an internal (the CRU) register. This level is determined by the jumper P1300 at pin 8 of U900 as previously described.

DATA BUS TRANSCEIVERS

The Data Bus Transceiver stage is made up of U500, U600, U510 and U610. Integrated circuits U600 and U610 make up a 16-bit buffer between the Data Bus and the microprocessor's Data input/output (pins 41 through 56) which allows data on the bus to be transferred to the

http://manoman.sqhill.com

microprocessor with the presence of a $\overline{\text{READ}}$ command at the enable input, pins 1 and 19 of both U600 and U610. Integrated circuit U500 and U510 compose another 16-bit buffer between the microprocessor Data input/output pins and the Data Bus. When enabled with a $\overline{\text{WRITE}}$ command at pins 1 and 19 of both U500 and U510, data may be transferred from the microprocessor to the Data Bus.

TRANSCEIVER CONTROL

The Data bus control signals, $\overline{\text{READ}}$ and $\overline{\text{WRITE}}$, are developed by the Transciever Control logic, U520C, U400A, U400B, U400C and U400D, from the control output levels produced by the microprocessor.

During a memory cycle, read or write, the memory enable signal ($\overline{\text{MEM}}$) applied to pins 2 and 12 of U400 is LO. Assume that the levels at pins 9 and 5 of U400 are also LO and that the R/$\overline{\text{W}}$ (read/write) signal applied to pin 13 of U400D and to pin 5 of U520C is alternating between its HI (read) and LO (write) states. A read (HI) command applied to U520C and U400D forces the $\overline{\text{WRITE}}$ command at pin 8 of U400C HI while it drives the $\overline{\text{READ}}$ level at pin 6 of U400B LO, producing the $\overline{\text{READ}}$ command. If the R/$\overline{\text{W}}$ command goes LO (write), the level at output pin 6 of U400B goes HI while that at pin 8 produces the $\overline{\text{WRITE}}$ command.

Now, if the HOLDA command goes HI, both levels at pins 6 and 8 of U400 go HI, disabling both the read and write data bus transceiver. If the memory enable command goes HI, indicating that the microprocessor is through using the memory for a time, the data bus transceivers are also disabled.

CONTROL BUS

The Control Bus stage buffers the control signals from the microprocessor and sets levels to the hardware Control Bus and Address Decoder stages with the presence of a HOLDA command. As long as the HOLDA command is LO, all outputs of the microprocessor are buffered. When the HOLDA command is HI, however, the R/$\overline{\text{W}}$, $\overline{\text{WE}}$, $\overline{\text{MEM}}$ and CRUOUT are held at their high impedance state.

The IAQ (Instruction Acquisition) output at pin 7 of the microprocessor goes to its active (HI) state whenever the microprocessor is fetching an instruction from memory. It is used only for test purposes in this instrument.

The Wait command at pin 3 of the microprocessor IC is an output buffered by U110C going to the Mother Board (diagram 37). The HI Wait output is produced in conjunction with the Ready command and indicates that the microprocessor is waiting for proper memory conditions to be established before continuing its operation.

The HOLDA (hold acknowledge) output, when HI, indicates that the microprocessor is in the Hold state, and a DMA operation is in process.

The CRUCLK (CRU clock), when HI, indicates that external interface logic should sample the CRUOUT data at pin 30 of the microprocessor IC, U700, the CRUOUT output. This output is tied to the Data input, pin 13, of U1310 through the buffer, U620. The CRUOUT data can be HI or LO, depending upon the particular command being performed by the microprocessor.

A HI R/$\overline{\text{W}}$ output at pin 13 of U620 indicates that all memory write buffers are disabled and are in a condition that data may be read from memory by either the microprocessor or a DMA device when properly enabled by $\overline{\text{MEM}}$ (memory enable) and $\overline{\text{HOLD}}$.

The MEM output command at pin 15 of U620 indicates that the Address Bus contains a valid memory address. This is present (LO) during both read from and write to memory operations.

The $\overline{\text{WE}}$ (Write Enable) indicates that the microprocessor or a DMA device has data available that is to be written into memory.

CRU OUTPUTS

The CRU (hardware control) Outputs stage consists of U1110A, U1110B, U1120A, U1210B, U1310, U520B and U1220B. This stage sets one of the CRU Output levels at output pins 4, 5, 6, 7, 9, 10, 11 and 12 of U1310 depending on the data at its input pin 13 and the address at its address pins 1, 2 and 3. A CRUCLK pulse applied to the enable, pin 14 of U1310 through U520B and U1110A allows the data at the input of U1310 to be transferred and stored at the addressed output. The address data at pins 14 and 13 of U1210B and pins 4 and 5 of U1220B determine (1) if the CRUCLK pulse is applied to U1310 to enable it, (2) the CRUCLK pulse is applied to U210 on diagram 27 to enable the setting of the keyboard flags, or (3) to disable both.

http://manoman.sqhill.com

ADDRESS DECODER

A $\overline{MEM}$ command from the Control Bus output IC, U620, enables U1210A so that the address data at its input pins 2 and 3 causes one of its four output pins 4, 5, 6 or 7 to go LO. If pin 4 is LO as addressed by A14 and A15 indicating a ROM cycle, a $\overline{ROM}$ (ROM enable) results. If output pin 7 is addressed, the level of the A12 (address bit 12) is distributed to the D input, pin 12, of U1010. If the A, B and D inputs from the address bus are LO and the C input is HI, the output pin 5 of U1010 is LO. Any other value at the inputs will cause this output to be HI.

This output is applied to pin 10 of U1110C and, if LO, the level from A9 (address bit 9) at pin 9 of U1110C is applied to the D input of U910. If HI, the D input is always HI. If the B, C and D inputs are LO, the A Input level selects either output pin 1 or 2 to go LO. Any other input levels drive output pins 1 and 2 HI. Since the $\overline{MEM}$ level from the Control Bus is LO, the G1 and G2 inputs at pins 18 and 19 of U1320 are enabled when pin 1 of U910 is LO, and the four address lines, A, B, C and D at pins 23, 22, 21 and 20 of U1320 now select one of U1320's outputs to go LO, depending on the address input data.

If output pin 8 is LO, and the R/$\overline{W}$ command from the Control Bus stage is HI, indicating a read cycle, the input at pins 9 and 10 of U1220C are both LO, generating the $\overline{FPR}$ (front panel read) command.

Integrated circuit U1000A, whose inputs are tied to the $\overline{ROM}$ and $\overline{GPIB}$ commands, in conjunction with the test jumpers, P121 and P1210, allow both of these address codes to refer to ROM memory, allowing ROM expansion. The new $\overline{GPIB}$ command is derived from pin 5 of U1210A by moving the wire jumper P1210.

ADDRESS BUFFERS

The Address Buffers stage, consisting of U800 and U810, buffer the address outputs at pins 10 through 24 of the microprocessor IC, U700, to levels capable of properly driving the devices tied to the Address Bus. The buffers are enabled when a LO level is applied to pins 1 and 19 of both U800 and U810. If the HOLDA level from the Control Bus stage should go HI, the address buffer is inhibited. The address enable jumper, P1001, allows the buffers to be disabled by removing the jumper

29

READ ONLY MEMORY

The Read Only Memory (ROM) circuit contains the stored firmware responsible for the proper operation of this instrument. It provides the control necessary for the microprocessor or a DMA device to access this stored data by using the Address and Data Busses. A schematic of the ROM circuit is given on diagram 29 in section 7, Diagrams and Circuit Board Illustrations. The schematic is divided by gray shaded lines separating the circuitry into major stages. These stage names are used to aid in locating and identifying the components and portions of circuitry described.

ADDRESS BUS BUFFER

The Address Bus Buffer stage consists of U130 and U230. This stage, when enabled by a LO applied to the enable inputs of U130 and U230 (pins 1 and 19) from the ROM Control stage, buffers 13 bits of data from the Address Bus to the address inputs of the ICs that make up the Memory state. When this stage is disabled, its outputs go to a high impedance state, isolating the ROM circuitry from the instrument Address Bus.

MEMORY

The Memory stage consists of U100, U110, U200, U210, U300, U310, U400 and U410. The first four of these parts are ROM (read only memory) ICs, while the latter are PROM (programmable read only memory). These memory IC's are addressed and enabled two at a time by applying data to their address inputs and applying a LO level to the selected CS (chip select) inputs, resulting in 16-bit data words applied to the Data Bus Buffer stage. Integrated circuits U100, U100, U200 and U210 are all addressed in the same manner, directly from the Address Bus Buffer stage. Addresses for (U300 and U310 for future expansion) U400 and U410 are the same as long as the Address Bus Buffer stage is enabled. However, when the FPLA (field programmable logic array) stage determines that it is required to address memory (this determination will be discussed in the FPLA stage description), the Address Bus Buffer stage is disabled. At this time U400 and U410 are addressed by a combination of the 6-bit output of the FPLA stage and the four least significant bits applied directly from the Address Bus. This configuration allows for addressing of up to 16 individual data words for every partial address generated by the FPLA stage. (XU300 and XU310 may not be used if not required by the FPLA.)

http://manoman.sqhill.com

ROM CONTROL

The ROM Control stage consists of U220, U225, U227, U320, U325, U420 and U425. This stage determines, from various inputs, which ROM pair should be enabled as well as if the Address and Data Busses should be enabled, and does so. In addition, this stage senses when an extended memory cycle will be required and generates the appropriate control level to the microprocessor to initiate such a cycle.

Table 2-4 illustrates the resulting output enable and memory cycle control levels generated by the ROM Control stage for various input combinations. As you will note, this table is separated into two parts. The first describes operation of this stage using static ROM and PROM ICs while the second describes the variations in operation resulting when using edge enabled ROMs. The Static/Clocked Selector, jumper P220, may be connected to accomodate use of either type of memory.

TABLE 2-4
ROM ENABLING

	INPUT NAME									RESULTING ENABLE FROM STAGE
	$\overline{\text{MEM}}$	$\overline{\text{ROM}}$	WAIT	A12	A13	A14	A15	$\overline{\text{FLAG}}$ PIN 19 OF U120	Φ2*	
VALID FOR BOTH "STATIC" AND "CLOCKED"	LO	~	~	~	LO	LO	HI	~	~	DATA BUS BUFFERS $\overline{\text{ENABLE}}$ (LO) (PIN 8 OF U325C)
	~	LO	~	~	~	~	~	~	~	
	~	~	~	~	~	~	~	HI	~	ADDRESS BUS BUFFERS $\overline{\text{ENABLE}}$ (LO) (PIN 6 OF U425C)
	~	LO	LO	~	~	~	~	LO	~	$\overline{\text{ROMDLY}}$ (LO) (PIN 8 OF U425P)
	LO	~	~	LO	LO	LO	HI	~	~	PROM $\overline{\text{ENABLE}}$ 1 (LO) (PIN 3 OF U420A)
	LO	~	~	HI	LO	LO	HI	~	~	PROM $\overline{\text{ENABLE}}$ 2 (LO) (PIN 1 OF U320A)
	~	LO	~	~	~	~	~	LO	~	
VALID FOR ONLY "STATIC"	~	LO	~	~	~	LO	~	HI	~	ROM $\overline{\text{ENABLE}}$ 1 (LO) (PIN 11 OF U420D)
	~	LO	~	~	~	HI	~	HI	~	ROM $\overline{\text{ENABLE}}$ 2 (LO) (PIN 8 OF U420C)
VALID FOR ONLY "CLOCKED"	~	LO	LO	~	~	LO	~	HI	LO	ROM $\overline{\text{ENABLE}}$ 1 (LO) (PIN 11 OF U420D)
	~	LO	LO	~	~	HI	~	HI	LO	ROM $\overline{\text{ENABLE}}$ 2 (LO) (PIN 8 OF U420C)

* Φ2 with falling edge delayed about 40 ns.

~ = indicates that state does not matter

http://manoman.sqhill.com

FPLA

U120 is the FPLA (field programmable logic array) stage. This IC enables memory address locations containing either invalid or obsolete data to be bypassed and left unread, enabling valid data from a different portion of memory to be read in its place.

Addresses known to contain valid data are ignored by the FPLA stage. However, when an address whose data is known to be incorrect is applied to the address inputs of U120, its $\overline{\text{FLAG}}$ output at pin 19 goes LO, disabling the address buffers stage through U425C of the ROM Control stage. Also at this time, a predetermined 6-bit address is output at the F0 through F5 outputs of U120. This 6-bit word, in conjunction with the 4 least significant bits on the Address Bus (A1 through A4), are applied to (if used, U300 and U310) U400 and U410 of the Memory stage, addressing the valid "patch"data stored in these PROMs.

The six output lines to memory from the FPLA stage may address 48 individual blocks of memory within (if used, U300 and U310) U400 and U410, while the 4 bits of address bus data applied directly to these ICs from the Address Bus may address up to 16 individual 16-bit words within each of these 48 blocks.

DATA BUS BUFFER

The Data Bus Buffer stage consists of U330 and U430. These are tri-state devices that, when enabled by a LO level applied to their enable inputs (pins 1 and 19), buffer the 16-bit data word read from memory (ROM or PROM) to the Data Bus. When disabled, they go to a high-impedance state, isolating the read only memory from the instrument data bus.

30

RANDOM ACCESS MEMORY

The Random Access Memory (RAM) circuit provides for the storage and retrieval of digital data by the microprocessor or by a DMA (direct memory access) device on the GPIB. A schematic diagram of the RAM circuit is given on diagram 30, in Section 7, Diagrams and Circuit Board Illustrations. The schematic is divided by gray shaded lines separating the circuitry into major stages. These stage names are used to aid in locating and identifying the components and portions of circuitry described.

MEMORY

The Memory stage is made up of 32 four-bit X 1024 Random Access Memory ICs and provides the actual storage function for data on the data bus. Four, and only four of these ICs may be addressed and enabled at one time. The combination of the four individual 4-bit Data outputs forms a 16-bit memory word, the data format required by the microprocessor. The Memory stage has the capacity to store 8192 sixteen-bit data words.

ADDRESS BUFFERS

The Address Buffers stage is made up of U650, U660A, U660B and U660C. It current buffers 10 bits of the Address bus data to each of the 32 memory ICs address inputs.

RAM CONTROL

The RAM Control circuit selects and enables 4 of the 32 ICs of the Memory Stage to either be read from, or written to, by a data bus device. The RAM Control circuit also determines if the RAM is to be read from, or written to, and produces the appropriate enable levels for each condition.

For the following conditions, it is assumed that the PUP level at the base of Q160 and BPUP (buffered PUP) applied to Q151 through R151 are HI, indicating that all supplies are functioning properly.

Integrated circuit U560 is a BCD to Decimal decoder and produces a LO at one of 10 output pins according to the 4-bit binary address at its inputs (only 8 are used in this application). A LO at 1 of these 8 output pins enables the specific block of memory addressed by address bits A11, A12 and A13 on the address bus. Each block of memory consists of four 1K by 4 bit static RAM ICs. A RAM Disable level applied to the D input pin of U560 is developed by the RAM Control stage from various input levels and disables the Memory stage by applying a HI level to pin 12 of U560, resulting in all 8 of its memory block enable outputs going HI.

If address bit 15 (A15) is HI, $\overline{\text{MEM}}$ (memory enable) is LO, and either address bit 13 (A13) or 14 (A14) is HI (but not both), the output at pin 8 of U550C enables U750B, U750C and U750D to act as a digital switch, producing the $\overline{\text{READ}}$ and $\overline{\text{WRITE}}$ enable levels to the Input/Output Data Buffers according to the level of the R/$\overline{\text{W}}$ (read/write) input command.

If the $\overline{\text{READ}}$ command applied to U550A is LO, indicating that the RAM is to be read, the LO RAM Disable level at the output of U550A enables the block of memory addressed by the remaining three inputs to U560 to be read.

http://manoman.sqhill.com

When the $\overline{\text{WRITE}}$ level applied to the input of U660F is LO and the $\overline{\text{WE}}$ level at the input of U660D is LO, indicating that the RAM is to be written to, a LO is applied to U550A at pin 2, resulting in a block of memory being addressed as previously described. Since the BPUP (buffered PUP) level is HI, a LO $\overline{\text{WP}}$ (processor write) level is applied to the write enable inputs of all memory ICs. In this state, the portion of RAM addressed is written to.

INPUT/OUTPUT DATA BUFFERS

The Input/Output Data Buffers stage consists of U450, U460, U350 and U360. Data from the Memory stage is buffered to the Data bus when the $\overline{\text{READ}}$ level developed by the RAM Control stage is LO. When the $\overline{\text{WRITE}}$ level from the RAM Control stage is LO, the data on the Data bus is buffered to the Memory stage. When these buffer enable levels ($\overline{\text{READ}}$ and $\overline{\text{WRITE}}$) are HI, the corresponding portions of the Input/Output Data Buffers stage go to a high impedance state.

MEMORY BACK-UP POWER SWITCH

The Memory Back-Up Power Switch stage provides a means of maintaining RAM contents when the 7854 power supply is turned off, either intentionally or due to a fault in the normal power system (either external or internal to the instrument), by using an external power source to keep the RAM circuitry turned on.

During normal operation, the PUP (power up) level applied to the base of Q160 is HI. This turns Q161 and Q760 on while back biasing Q162, turning off Q860 (the external power switch transistor). The normal operating current, necessary for RAM operation, flows through Q760.

If the PUP level should go LO, Q160, Q161 and Q760 are turned off. Current stored in the storage capacitors that are attached to the +5 V_B line flows as base current through R166 to turn Q162 on. This saturates Q860 and the external power source now supplies power to maintain the RAM's contents.

If the Ext Battery power is connected to this circuit while the instrument is running, Q855 is turned on, ensuring that Q860 remains off. C862 appears to be shorted to ground for fast voltage transitions, as would be the case when connecting the Ext Battery power to this circuit, and the voltage applied to the base of Q855 through the voltage divider R862 and R865 turns this transistor on, back biasing Q860. This configuration ensures that the Ext Battery power is implemented only when the PUP level goes LO.

VR870, Q163 and their associated components comprise a voltage sense switch, sensing the voltage at the Ext Battery input. If this input voltage should rise above about +6.3 volts, Q163 conducts, reducing base current to Q162. This decreases the base drive to Q860, turning it off. In this condition, memory contents will be lost but memory components are not damaged.

WRITE PROTECT

The Write Protect stage, consisting of Q151, U250D and their associated components, ensures that the contents of RAM are not changed when the instrument is turned off and MEMORY BACK-UP POWER is in use. As the instrument power is turned off, the PUP (power up) and BPUP (buffered PUP) levels go LO before the instrument supplies are actually turned off. As these levels go LO, the Memory Back-Up Power Switch stage applies the external MEMORY BACK-UP POWER to the RAM circuit to maintain RAM contents and the collector of Q151 is forced HI. This HI applied to U250D is inverted and applied to U250B, resulting in a HI $\overline{\text{WP}}$ (write protect) level to prevent further writing to RAM. The instrument supplies then turn off and RAM contents are maintained by the MEMORY BACK-UP POWER.



READOUT ACQUIRE

The Readout Acquire circuit provides digital encoding of the analog readout data received from the Horizontal and Vertical plug-in compartments for use by the Display system to develop an alphanumeric readout display. The Readout Acquire circuit has a clock and time slot generator to develop time slot information going to the plug-ins. The counter stages, Row and Column Data Switches and Row and Column Decoder stages provide a means of interpreting the analog character and digital position information for the crt display. The Character Encoders and Buffers stages assign a unique data word for each character, a unique address for character location, and buffer this data to the Address and Data Busses. A schematic of the Readout Acquire circuit is given on diagram 31, Section 7, Diagrams and Circuit Board Illustrations. The schematic is divided by gray shaded lines separating the circuitry into major stages. The following description uses these stage names to aid in locating and identifying the components and portions of circuitry described.

The definition of several terms follows:

Character—A character is a single number, letter or symbol displayed on the crt, either alone or in combination with other charcters.

http://manoman.sqhill.com

Word—A word is made up of a related group of characters. In the 7854 Readout Acquire circuitry, a word can consist of up to ten characters.

Frame—A frame is a display of all words for a given operating mode and plug-in combination. Up to eight words acquired from the plug-ins can be displayed in one frame. Figure 2-38 shows the position of each word in a complete frame when operating the instrument in the scope mode.

Column—One of the vertical lines in the Character Selection Matrix (see Fig. 2-39). Columns C-0 (column zero) to C-10 column 10) can be addressed in the 7854 system.

Row—One of the horizontal lines in the Character Selection Matrix. Rows R-1 (row 1) through R-10 (row 10) and R-14 (row 14) can be addressed in the 7854 system; R-14, as shown on the matrix, prevents any information from being encoded from the plug-in and no display is produced.

Time-Slot—A location in a pulse train. In the 7854 readout system, the pulse train consists of 10 negative-going pulses. Each time-slot pulse is assigned a number between one and ten. For example, the first time-slot is TS-1.

Time-multitplexing—Transmission of data from two or more sources over a common path by using different time intervals for different signals.

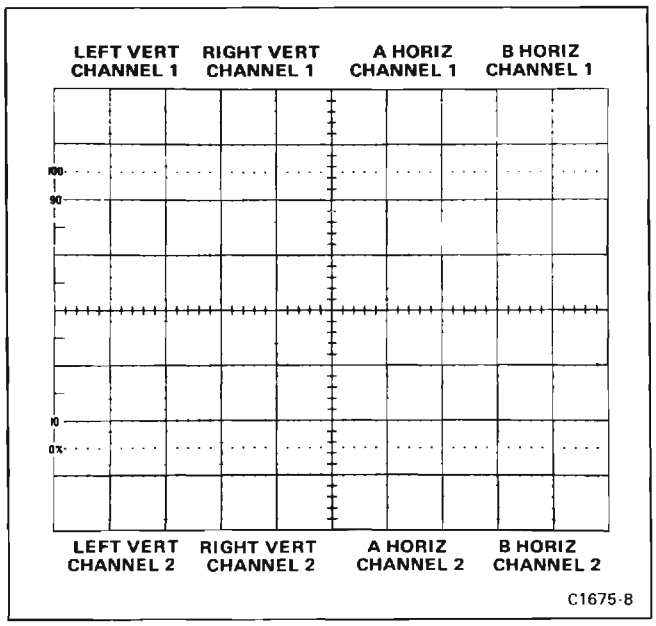

Figure 2-38. Location of Readout words on the crt identifying the originating plug-in and channel.

Display Format

Three different display formats for alphanumeric character display exist, depending on the selected mode of the 7854. Up to 16 lines of 40 characters each may be displayed on the crt when programming the 7854. When the 7854 is in the BOTH (combined SCOPE/STORED) mode, 4 lines of 40 characters each may be displayed. When in SCOPE mode only, displayed characters are broken into "words" and are displayed in only two lines. Only this latter format will be addressed in the following discussion, as the first two are spoken to in the Horizontal/Vertical Display and Control description. Also, in any mode, lines 3-14 are accessible via GPIB. Pressing the ID button produces a readout display on lines 9-10 and 12-13 showing certain types of status information for the 7854.

In the SCOPE mode, up to eight words of readout information may be displayed on the crt. The position of each word is fixed and is directly related to the plug-in unit from which it originated. Figure 2-38 shows the area of the graticule where the readout information from each plug-in unit is displayed. Notice that Channel 1 information from each plug-in unit is displayed on line 1 of the crt while that of Channel 2 is displayed on line 16 (2 lines per division). Figure 2-40 shows a typical display where only Channel 2 of the RIGHT VERT and B HORIZ units is selected for display.

Each word in the readout display can contain up to 10 characters, although the typical display will contain between two and seven characters per word. The characters are selected from the Character Selection Matrix shown in Figure 2-39. In addition, 12 operational addresses are provided for special instructions to the Readout Acquire circuitry. The unused locations in the matrix (shaded area) are available for future expansion of the Readout Acquire circuitry. The method of addressing the locations in the Character Selection Matrix is described in the following discussion.

Developing the Display

The following basic description of the Readout Acquire circuitry uses the block diagram shown in Figure 2-41. This description is intended to relate the basic function of each stage to the operatiton of the overall readout system. Detailed information on circuit operation is given later.

The key block in the Readout Acquire system is the Timer stage. This stage produces the basic signals that establish the timing sequences within the Readout Acquire circuitry. Period of the timing signal is about 200-250 microseconds. This stage also produces control signals for other stages within this circuit. The Time-Slot

http://manoman.sqhill.com

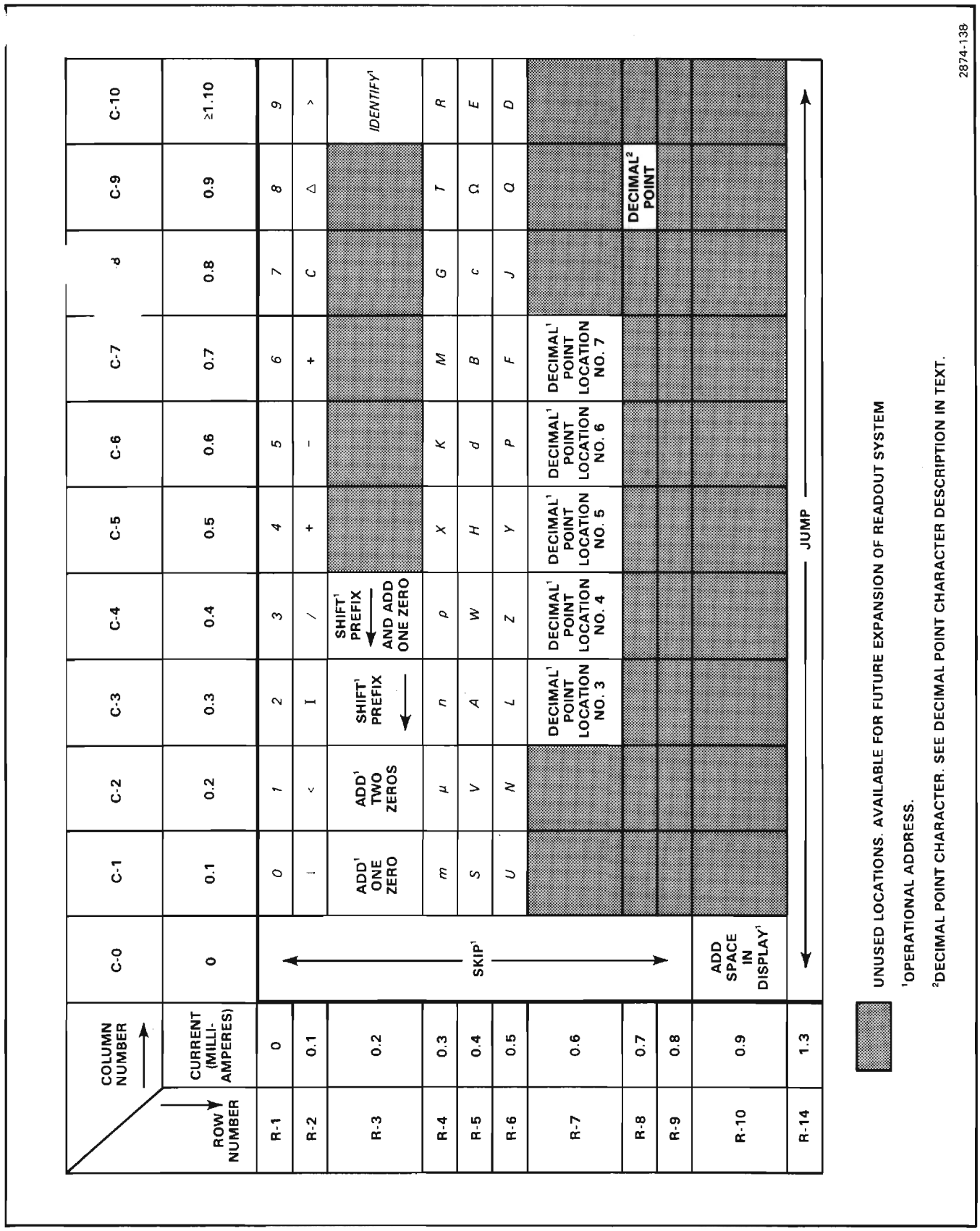

Figure 2-39. Character Selection Matrix for the 7854 Readout Acquire system.

http://manoman.sqhill.com

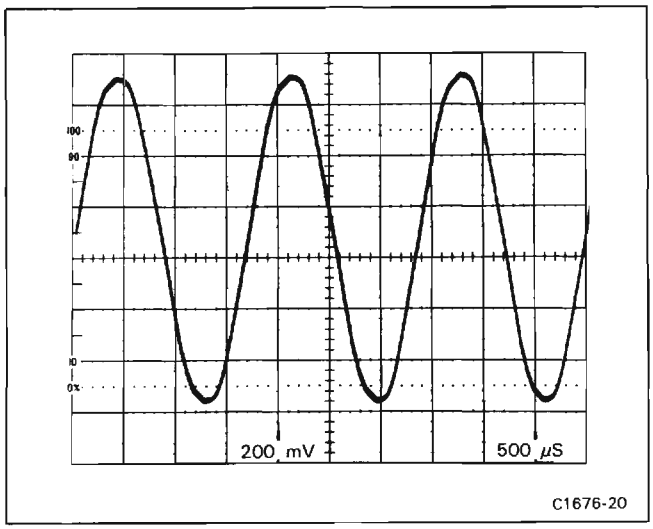

Figure 2-40. Typical readout display where only channel 2 of the Right Vertical and B Horizontal units is displayed.

Counter stage receives a trapezoidal voltage signal from the Timer stage and directs it to one of ten output lines. These output lines are labeled TS-1 through TS-10 (time-slots one through ten) and are connected to the vertical and horizontal plug-in compartments. The output lines are energized sequentially, so there is a pulse on only one of the 10 lines during any 200-250 microsecond timing period. After the Time-Slot Counter stage has counted time-slot 10, it produces an End-of-Word pulse which advances the system to the next channel.

Two output lines, row and column, are connected from each channel of the plug-in unit back to the Readout Acquire circuitry. Data is typically encoded on these output lines by connecting resistors betwen them and the time-slot input lines. The resultant output is a sequence of ten analog current levels that range from zero to one milliampere (100 microamperes/step) on the row and column output lines. These row and column levels correspond to the rows and columns of the Character Selection Matrix in Figure 2-39. The standard format for encoding information onto the output lines is given in Table 2-5. (Special purpose plug-in units may have their own format for readout; these special formats will be defined in the manuals for these units.)

The encoded column and row data from the plug-in units is selected by the Column Data Switch and Row Data Switch stages respectively. These stages take the analog currents from the eight data lines (two channels from each of the four plug-in compartments) and produce a time-multiplexed analog voltage output containing all of the column or row information from the plug-ins. The Column Data Switch and Row Data Switch are sequenced by the binary channel address code from the Channel Counter stage.

The time-multiplexed output of the Column Data Switch is monitored by the discrete amplifier of the Column Decoder stage and if it senses that no column current has been encoded in a time-slot, an output level to the

Table 2-5

Standard Readout Format

Time-Slot Number	Description
TS-1	Determines decimal magnitude (number of zeros displayed or prefix change information)
TS-2	Indicates normal or inverted input (no display for normal).
TS-3	Indicates calibrated or uncalibrated condition of plug-in variable control (no display for calibrated condition).
TS-4	Scaling.
TS-5 TS-6 TS-7	Not encoded by plug-in unit. Left blank to allow addition of zeros by readout system.
TS-8	Defines the prefix which modifies the unit of measurement.
TS-9 TS-10	Defines the units of measurement of the plug-in unit. May be standard units of measurement (V, A, S, etc.) or special units selected from the Character Selection Matrix.

http://manoman.sqhill.com

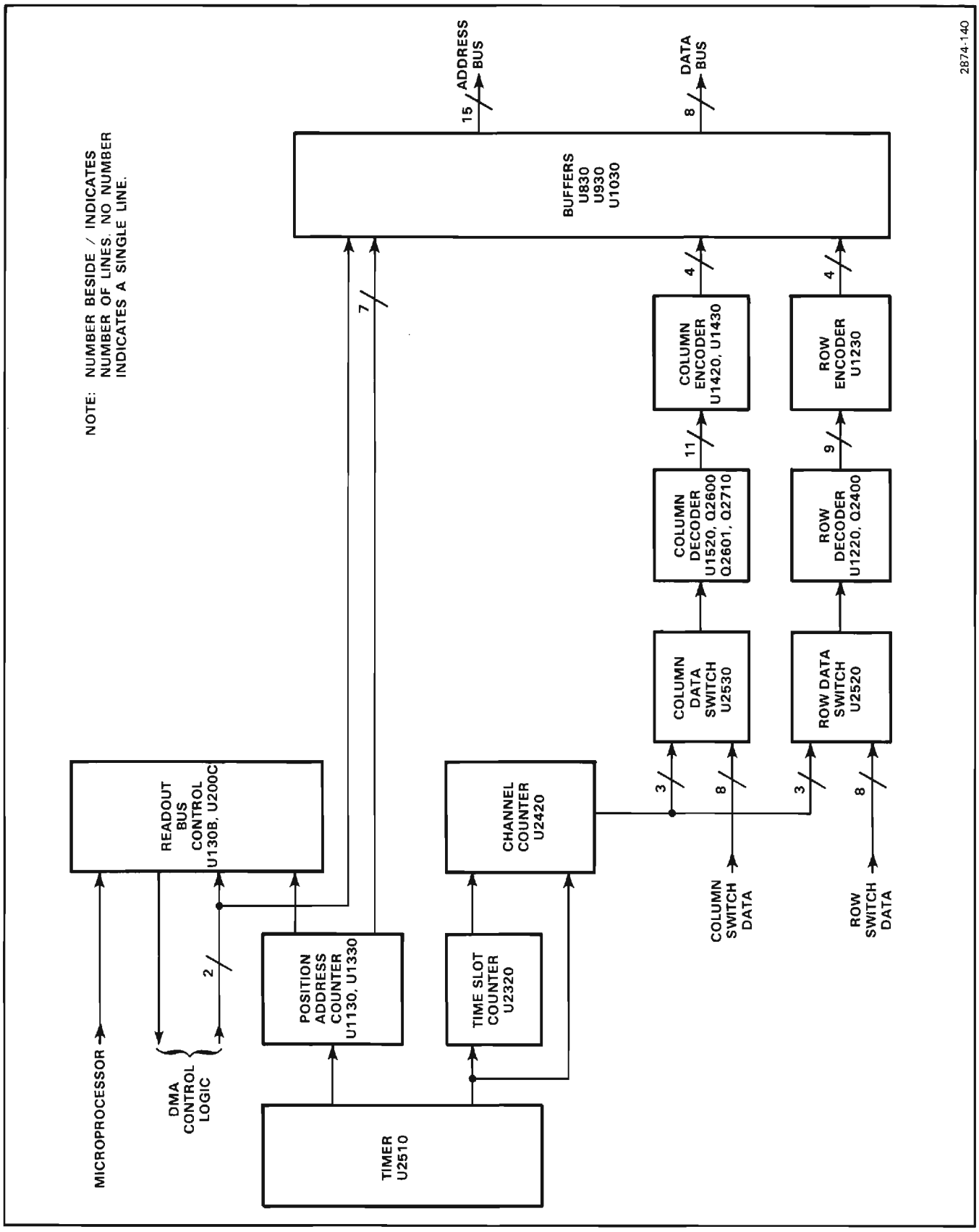

Figure 2-41. Detailed Block Diagram of the Readout Acquire system.

http://manoman.sqhill.com

Character Encoder stage generates a unique "skip" data word and no display will be produced. Skip is used to produce spaces in a display or to completely blank out a portion of a line.

The analog outputs of the Column Data Switch and Row Data Switch are connected to the Column Decoder and Row Decoder stages respectively. These stages sense the magnitude of the analog voltage input and produce an output current on one of ten lines. The outputs of the Column Decoder stage are identified as C-1 through C-10 (column 1 through 10) corresponding to the encoded column information. Likewise, the outputs of the Row Decoder stage are identified as R-1 through R-10 (row 1 through 10) corresponding to the encoded row information (R-9 is not used). In addition, R-14 may be encoded to cause the display to jump to the next display position. The primary function of the row and column outputs is to select a character from the Character Selection Matrix to be produced by the Display D/A circuit.

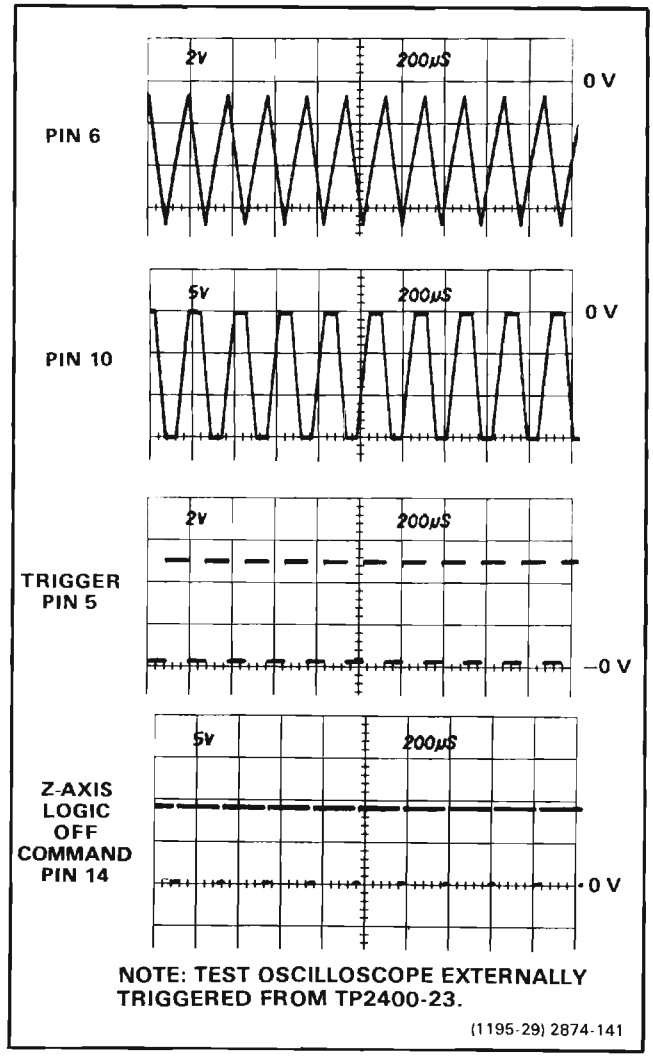

Figure 2-42. Output waveforms of Timer stage.

TIMER

Timer U2510 establishes the timing sequence for all circuits within the Readout Acquire system. This stage produces four time-related output waveforms (see Fig. 2-42). The triangle waveform produced at pin 6 forms the basis for the remaining signals. The basic period of this triangle waveform is about 200-250 microseconds as controlled by rc network R2611-C2612. The triangle waveform is clipped and amplified by U2510 to form the trapezoidal output signal at pin 10. The amplitude of this output signal is exactly 15 volts as determined by U2510 (exact amplitude necessary to accurately encode data in plug-in units; see Encoding the Data). The trigger output at pin 5 provides the switching signal for the Time-Slot Counter stage. Transistor Q2500 buffers this signal and is used in the Position Address Counter stage and Readout Bus Control circuit (diagram 32).

The 5-kHz Φ2 signal at pin 14 and the Fast Trigger output (5-kHz Φ1) are used in the Display D/A and Amplifier circuit (diagram 32) to determine the rate of character display.

TIME-SLOT COUNTER

Time-Slot Counter U2320 is a sequential switch which directs the trapezoidal waveform input at pin 8 to one of its 10 output lines. These time-slot pulses are used to interrogate the plug-in units to obtain data for the Readout Acquire system. The Trigger pulse at pin 15 switches the Time-Slot Counter to the next output line; the output signal is sequenced consecutively from time-slot 1 through time-slot 10. Figure 2-43 shows the time relationship of the time-slot pulses. Notice that only one line carries a time-slot pulse at any given time. When time-slot 10 is completed, a negative-going "End-of-Word" pulse is produced at pin 2 to reset the Channel Counter IC.

http://manoman.sqhill.com

Pin 16 is a Reset input for the Time-Slot Counter. When this pin is held LO, the Time-Slot Counter resets to time-slot 1. The Time-Slot Counter is reset in this manner when U1330B of the Position Address Counter stage detects that 80 characters have been acquired and stored in memory; i.e., all 8 plug-in channels have been encoded and stored in memory.

CHANNEL COUNTER

The Channel Counter, U2420, is a binary counter that produces the channel address code for the Column and Row Decoder stages. This code instructs these stages to sequentially select and display the eight channels of data from the plug-ins. Table 2-6 gives the eight combinations of the channel address code and the resultant channel selected with each combination.

Encoding the Data

Data is conveyed from the plug-in units to the Readout Acquire system in the form of an analog (current level) code. The characters that can be selected by the encoded data are shown on the Character Selection Matrix (see Fig. 2-39). Each character requires two currents to define it; these currents are identified as the column current and the row current, corresponding to the column and row of the matrix. The column and row data is encoded by programming the plug-in units. Figure 2-44 shows a typical encoding scheme using resistors for a voltage-sensing amplifier plug-in unit. Notice that the ten TS (time-slot) pulses produced by the Time-Slot Counter stage are connected to the plug-in unit. However, time-slot 5, 6, 7 and 10 are not used by the plug-in unit to encode data when using the Standard Readout Format. (See Table 2-5 for Standard Readout Format.) The amplitude of the time-slot pulse is exactly -15 volts as determined by the Timer stage. Therefore, the resultant output current from the plug-in units can be accurately controlled by the programming resistors in the plug-in unit.

For example, in Figure 2-44 resistors R10 through R90 control the row analog data, which is connected back to the Readout Acquire system. Figure 2-45A shows an idealized output current waveform of row analog data, which results from the time-slot pulses. Each of the row levels of current shown in these waveforms correspond to 100 microamperes of current. The row numbers on the left-hand side of the waveform correspond to the row in the Character Selection Matrix (see Fig. 2-39). The row analog data is connected back to the Readout Acquire system via terminal B37 of each plug-in interface connector of the Main Interface circuit (diagram 3).

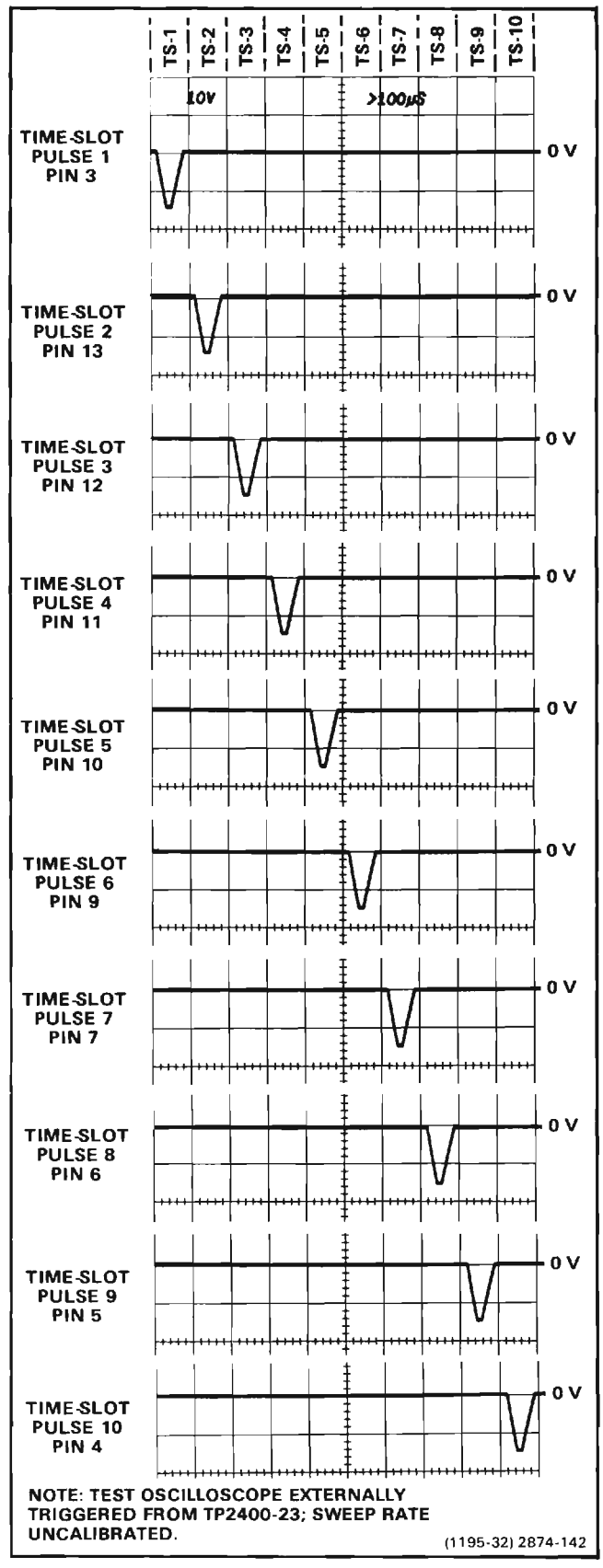

Figure 2-43. Time relationship of the Time Slot (TS) pulses produced by U2320.

http://manoman.sqhill.com

Table 2-6
Channel Address Code

Pin 11 of U2420	Pin 8 of U2420	Pin 9 of U2420	Channel Displayed
LO	LO	LO	Channel 1 Left Vertical
LO	LO	HI	Channel 2 Left Vertical
LO	HI	LO	Channel 1 Right Vertical
LO	HI	HI	Channel 2 Right Vertical
HI	LO	LO	Channel 1 A Horizontal
HI	LO	HI	Channel 2 A Horizontal
HI	HI	LO	Channel 1 B Horizontal
HI	HI	HI	Channel 2 B Horizontal

The Column analog data is defined by resistors R110 through R190. The program resistors are connected to the time-slot lines by switch closures to encode the desired data. The data, as encoded by the circuit shown in Fig. 2-44, indicates a 100-microvolt sensitivity with crt display inverted and calibrated deflection factors. This results in the idealized output current waveforms shown in Fig. 2-45B at the column analog data output, terminal A37 of the plug-in interface.

Resistor R111, connected between time-slot 1 and the column analog data output, encodes two units of current during time-slot 1. Referring to the Character Selection Matrix, two units of column current, along with the two units of row current encoded by resistor R10 (row 3), indicates that two zeros should be added to the display.

Resistor R120 adds one unit of column current during time-slot 2 and, along with one unit of current from the row output, the Readout Acquire system is instructed to add an invert arrow to the display. Resistor R130 is not connected to the time-slot 3 line, since the deflection factor is calibrated. Therefore, there is no column current output during this time-slot and no display on the crt.

During time slot 4, two units of column current are encoded by R140. There is no row current encoded during this time-slot, resulting in the numeral 1 being displayed on the crt. Neither row nor column analog data is encoded during time-slots 5, 6 and 7 as defined by the Standard Readout Format. During time-slot 8, two units of column current and three units of row current are encoded by resistors R181 and R80, respectively. This addresses the μ prefix in the Character Selection Matrix.

http://manoman.sqhill.com

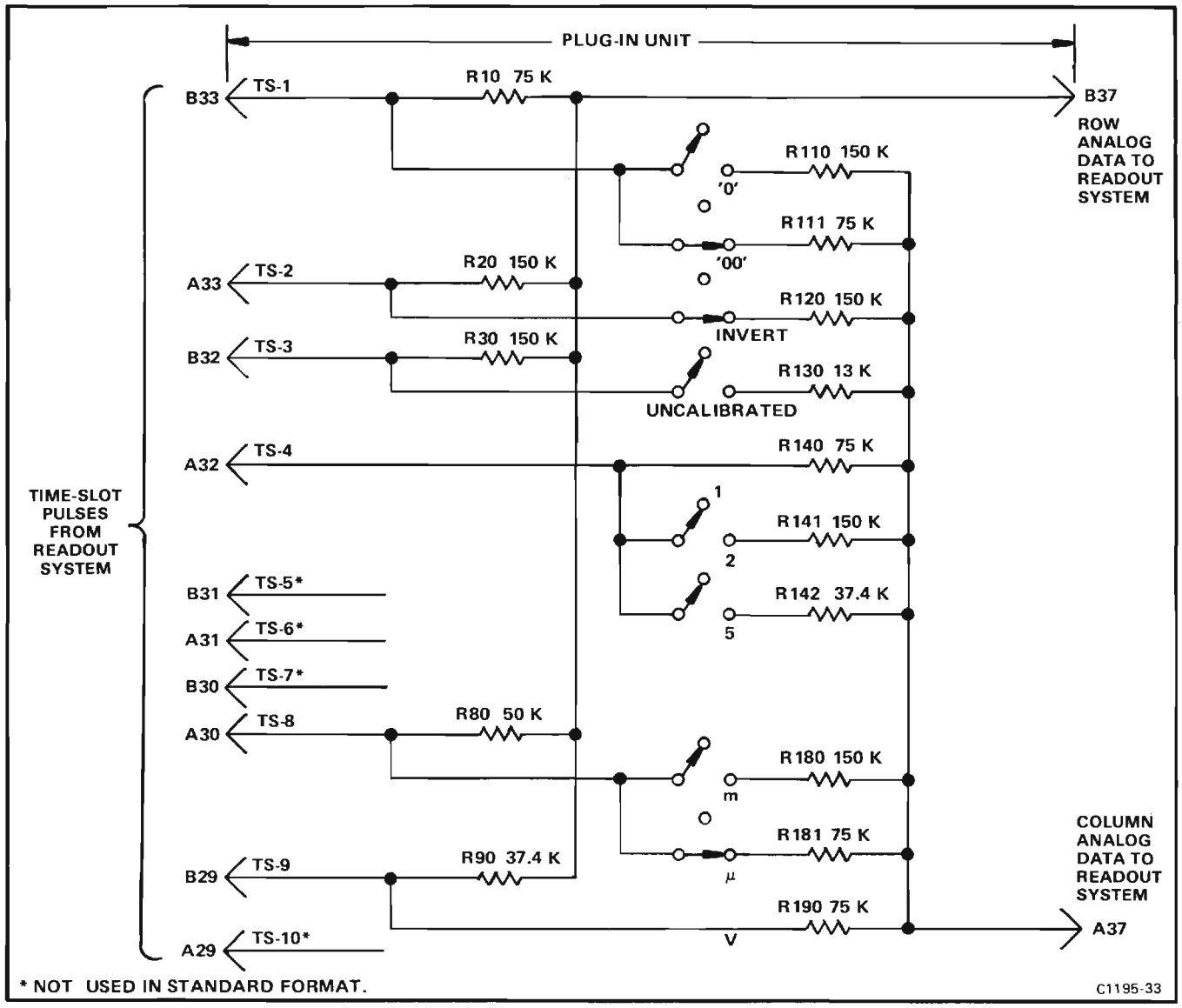

Figure 2-44. Typical encoding scheme for Voltage-Sensing plug-in unit. Coding shown for a calibrated deflection factor of 100 microvolts (inverted).

The final data output is provided from time-slot 9 by R190 connected to the column output and R90 to the row output. These resistors encode two units of column current and four units of row current to cause a V (volts) to be displayed. Time-slot 10 is not encoded, in accordance with the Standard Readout Format. The resultant crt readout character display will be ↓100 μV.

In the above example, the row analog data was programmed to define which row of the Character Selection Matrix was addressed to obtain information in each time-slot. The column data changes to encode the applicable readout data as the operating conditions change. For example, if the variable control of the plug-in unit was activated, R130 would be connected between time-slot 3 and the column analog data output line. This encodes 10 units of column current (see shaded area in time-slot 3 of the waveform shown in Fig. 2-45B). Since one unit of row current is also encoded during this time-slot by R30, a > symbol is added to the display. The crt readout will now show ↓> 100 μV. In a similar manner, the other switches can change the encoded data for the column output and thereby change the readout character display. See the descriptions which follow for decoding this information.

The column analog data encoded by most plug-in units can be modified by attenuator probes connected to the input connectors of amplifier plug-in units. A special coding ring around the input connector of the plug-in unit

http://manoman.sqhill.com

senses the attenuation ratio of the probe (with readout-coded probes only). The probe contains a circuit that provides additional column current. For example, if a 10X attenuator probe is connected to a plug-in unit encoded for 100 microvolts as shown in Figure 2-45, an additional unit of current is added to the column analog data during time-slot 1. Since two units of current were encoded by R111 (see Fig. 2-44), this additional current results in a total of three units of column analog current during this time slot. Referring to the Character Selection Matrix, three units of column current, along with the two units of row current encoded by R10, indicates that the prefix should be shifted one column to the left. Since this instruction occurs in the same time-slot that previously indicated that two zeros should be added to the display and only one instruction may be encoded during a time-slot, the zeros do not appear in the display. The crt readout will now be changed to 1 mV (readout program produced by plug-in same as for previous sample).

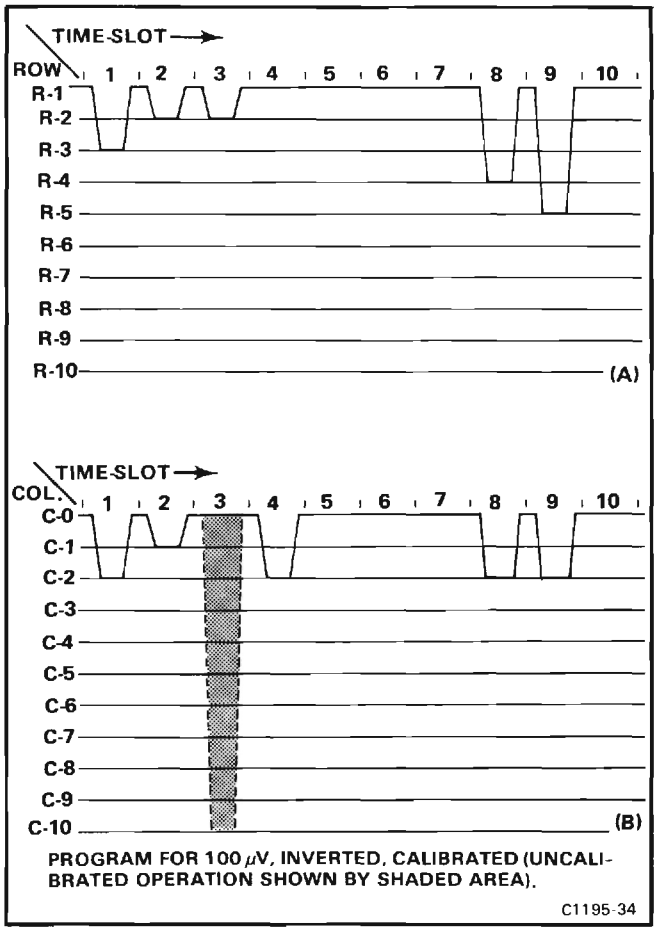

Figure 2-45. Idealized current waveforms of: (A) Row Analog data. (B) Column Analog data.

Three other lines of information are connected from each of the plug-in compartments to the Readout Acquire system. The column and row analog data from Channel 2 of a dual-channel plug-in are connected to the Readout Acquire system through terminals A38 and B38 of each plug-in interface connector, respectively. Force readout information is encoded on connector terminal A35; the function of this input is described under Column and Row Data Switches.

The preceding information gave a typical example of encoding data from an amplifier plug-in unit. Specific encoding data and circuitry is shown in the individual plug-in unit manuals.

COLUMN AND ROW DATA SWITCHES

The encoding data from the plug-in units is connected to the Column and Row Data Switch stages. A column-data line and a row-data line convey analog data from each of the eight data sources (two channels from each of the four plug-in compartments).

The Column Data Switch U2530 and the Row Data Switch U2520 receive the channel address code from the Channel Counter stage. This binary code directs the Column Data Switch and the Row Data Switch as to which channel should be the source of the encoding data. Table 2-6 gives the eight combinations of the Channel Address Code and the resultant channel selected with each combination. These stages have eight inputs and provide a time-multiplexed output at pin 7, which includes the information from all of the input channels. The eight inputs to each stage originate in the plug-in units.

In addition to the encoding data inputs from the plug-in units, inputs VR, VL, HA and HB are provided to the Column Data Switch from the VERT MODE and HORIZ MODE switches to inhibit the readout character display for any plug-in unit(s) not selected for display (see diagram 2). When a plug-in unit is selected, a HI level is applied to inhibit the input for the opposite channel. The channel inhibit lines are LO only when the associated plug-in unit has been selected for display. When a unit is not selected, the respective line is HI to forward bias the associated diodes; CR2430-CR2431, CR2432-CR2433, CR2434-CR2435 or CR2436-CR2437. The forward-biased diodes cause encoded data from the inhibited channel to bypass the Column Data Switch inputs. However, since it may be desired to display information from special-purpose plug-in units (even though they do

http://manoman.sqhill.com

not produce a normal waveform display on the crt), a feature is provided to over-ride the channel inhibit. This is done by applying a LO to the associated force readout ($\overline{\text{VRFRO}}$, $\overline{\text{VLFRO}}$, $\overline{\text{HAFRO}}$ or $\overline{\text{HBFRO}}$) input. The LO level diverts the HI channel-inhibiit current and allows the data from this plug-in unit to reach the Column Data Switch, even though it has not been selected for display by the Mode Switch and Calibrator circuit, diagram 2.

COLUMN AND ROW DECODERS

The Column Decoder U1520 and Row Decoder U1220 sense the magnitude of the analog voltages at their inputs (pin 10) and produce a decimal output on one of ten lines corresponding to the column or row data encoded by the plug-in unit. These outputs provide the column digital data and row digital data, which is used by the Character Encoders stage.

The level sense amplifier made up of Q2710A, Q2710B, Q2601, Q2600 and their associated components sense the analog level of the time multiplexed analog column signal. If this level indicates that data is present to be decoded by U1520 the output of Q2600 goes HI. If, however, it is sensed that no data is to be decoded by the Column Decoder, the collector of Q2600 is LO. This is applied to the Character Encoders stage to indicate a "skip" condition.

The network at the input of the Row Decoder, made up of Q2400 and its associated components, is a row-14 detector that produces a command to disable row data. This row current is encoded by a special-purpose plug-in to cause all or part of a word to be deleted. Whenever row 14 (thirteen units of row current, or 1.3 milliamperes) is encoded, the base of Q2400 is pulled negative enough that this transistor is turned off. With Q2400 off, outputs 1-10 can no longer sink any current so they are pulled HI. No display is produced.

Row Match adjustment R2200 sets the gain of the Row Data Switch to match the gain of the Row Decoder for correct output. Column Match adjustment R2600 performs the same function for the Column Data Switch stage.

CHARACTER ENCODERS

The Character Encoder stage translates the decimal output information coming from the Row and Column Decoders into a unique 8-bit data word defining the encoded character in a binary form.

The row encoder IC, U1230, receives, at its inputs, the data from the Row Decoder IC, U1220, in the form of 9 binary bits, only one of which may be LO. This LO level applied to one input pin of U1230 results in a 4-bit binary code associated with that pin at its outputs.

The Column Encoder ICs, U1420 and U1430, operate in much the same manner in that a LO input level is encoded to a 4-bit binary code associated with the LO input pin. A LO on any of the input pins of U1430 produces a HI EO (enable output) level at its output pin 15. This HI tied to the $\overline{\text{EI}}$ (enable input) input pin 5 of U1420 disables this encoder (U1420) and its outputs go to a high-impedance state. A unique 4-bit binary code for the LO input line is derived from the 3 encoded outputs of U1430 and this enable level.

If no LO level is applied to U1430's inputs, its EO output is LO, enabling U1420. Any LO level at the input pins of U1420 is encoded to the unique, 3-bit binary code associated with that pin. These 3 encoded bits, along with the now LO enable level from U1430, form a unique, 4-bit binary code representing the output of the Column Decoder stage.

The two unique, 4-bit codes representing the row and column data encoded by the plug-in being interrogated, together, form a unique, 8-bit data word representing one, and only one, character that may be displayed on the crt.

POSITION ADDRESS COUNTER

The Position Address Counter stage generates 80 unique character position addresses representing physical display locations on the crt. It is made up of U1130, U1330B, Q2500 and their associated components.

The Timer stage clock output is applied to the clock input of U1130 through the emitter-follower buffer transistor, Q2500. Together, U1130 and U1330B make up a decimal 80 counter, with the one-shot multivibrator (U1330B) triggering on the falling edge of count 80 to reset the Position Address Counter (U1130) to zero. The Channel Counter stage, U2420, is also reset by this HI one-shot pulse, while U1930D inverts this pulse to reset the Time Slot Counter, U2320.

http://manoman.sqhill.com

Since the Position Address Counter clock input coincides with that of the Time Slot Counter, a unique position address is generated for each of any 80 consecutive time slot pulses generated and encoded by the Readout Acquire system.

BUFFERS

The Buffers stage is made up of 3 tri-state buffer ICs, U830, U930 and U1030, which buffer the encoded readout character and position data onto the Data and Address Busses respectively. A $\overline{\text{BGRO}}$ (readout bus grant) command from the DMA Control Logic system is required to enable the buffers; otherwise, they are in their high-impedance state and isolate the Readout Acquire system from the Data and Address Busses.

The 8 most significant bits of the position address are generated by hardwiring the inputs of U930 either HI or LO (set to hexidecimal address DFxx). The low order bits (xx), as they are generated, define the lower portion of this address and readout information is sequentially stored in this (DFxx) memory block. When readout character data is retrieved from this block of memory, the 8 most significant bits of the 16-bit data word are ignored since it only takes the 8 lower bit to uniquely define a character from the Character Selection Matrix.

READOUT BUS CONTROL

The Readout Bus Control stage, made up of U130B and U200C, generates the $\overline{\text{BRRO}}$ (readout bus request) signal to the DMA Control Logic circuit.

The ROACQEN (readout acquire enable) level from the microprocessor is quiescently LO and that of the $\overline{\text{BGRO}}$ (readout bus grant) and $\overline{\text{RBR}}$ (remove bus request) are HI, so that any clock pulse applied to pin 11 of U130B from the Timer stage through Q2500 causes no change in the $\overline{\text{Q}}$ output level. When the ROACQEN command goes HI, the next clock pulse from the Timer stage, through Q2500, causes a LO $\overline{\text{BRRO}}$ level to be generated. The DMA Control Logic circuit responds with a LO $\overline{\text{BGRO}}$ signal, enabling the buffers stage. After the encoded character data and character position data is read, a $\overline{\text{RBR}}$ (remove bus request) command is given by the DMA Control Logic circuit, which resets the $\overline{\text{BRRO}}$ (readout bus request) level.



VERTICAL/HORIZONTAL DISPLAY AND CONTROL

A schematic of the Vertical Display and Control circuit is given on diagram 32 and the Horizontal Display and Control circuit is shown on diagram 33 in Section 7 of this manual (Diagrams and Circuit Board Illustrations). These circuits provide the proper control voltages for operation of oscilloscope deflection and Z-Axis Amplifier circuitry when displaying digitally-processed waveforms or characters.

When in the stored mode (displaying digitally processed data), two types of information may be displayed on the crt; digitized waveforms or alphanumeric readout characters. Digitized waveforms may be displayed in one of two possible sub-modes, while alphanumeric characters may only be displayed in one manner. The two possible waveform sub-modes are the X-Y (horizontal versus vertical) and Y-T (vertical versus time) sub-modes while the alphanumerics are displayed in the character sub-mode.

In the X-Y sub-mode, both stored horizontal and vertical data are simultaneously displayed on the crt with respect to each other. In the Y-T sub-mode, stored Y data points are displayed with respect to time by sequentially addressing memory and displaying the retrieved Y-data in the horizontal location on the crt corresponding to the addressed memory location. The character sub-mode is used only when displaying alphanumeric readout characters.

In addition, X-Y and Y-T sub-modes may be entered, alternating between portions of real time information being displayed, when the oscilloscope is in the BOTH (stored and real time information) mode. When in the SCOPE (real time display) mode, the character sub-mode may be entered, alternating between portions of real time display information, to display alphanumeric readout information.

http://manoman.sqhill.com

Since the Vertical Display and Control circuitry varies in operation between each of the three sub-modes described, and due to the great number of interacting control and signal lines in this portion of circuitry, a written circuit description at this point would be cumbersome and confusing. Therefore, Table 2-7 is given at the end of this section, listing each of these signal and control lines by name, giving a description of how that signal will function in each of these three sub-modes. Refer also to the following Block Diagram description for Figure 2-46 explaining how each basic block of circuitry, defined by gray shaded lines on the schematic, relates to the remainder of the display system.

BLOCK DESCRIPTION

The Vertical/Horizontal Display and Control circuits provide the proper voltages to the oscilloscope deflection and Z-axis amplifiers for displaying digitally-processed waveforms and characters.

Since the operation of the Display and Control circuitry differs greatly depending on the selected operating mode, the following description is divided into waveform and character operating modes. Waveform mode is further divided into X-Y (horizontal vs. vertical) and Y-T (vertical vs. time) operation. As a further aid toward understanding the operation of this section, the circuitry is described in terms of major functional blocks with waveform and character data flow diagrams provided (see Fig. 2-46). Data flow is further described with the aid of Table 2-7, listing the applicable input and output signals and their basic functions. Characteristic waveforms are referenced in the table and illustrated in Section 7 at the rear of this manual (see the **Display System Waveforms and Timing Diagrams** pullouts in the Diagrams section). Refer to Figure 2-46, Waveform Data Flow, for detailed information concerning data flow between major functional blocks. for sake of clarity, inputs to the Control Logic block are not shown tied to the small blocks that make it up. At this time, simply assume that signal lines are connected where necessary.

Waveform Mode

Y-T OPERATION. The initial conditions for the Vertical D/A Converter are set by the microprocessor through the Address Decode lines to the display Control Logic stage. The DMA Control Logic stage then sends a bus request ($\overline{\text{BRDSY}}$) to the DMA Control circuit (diagram 24) which acknowledges the bus request with a bus grant ($\overline{\text{BGDSY}}$) back to the DMA Control Logic stage. The Interface Control Logic stage produces the required signals to enable the Address Generator circuit (diagram 22), allowing it to drive the Address Bus and call data from the RAM (random access memory) circuit (diagram 30). The RAM circuit puts the data from the accessed memory location onto the Data Bus and the Vertical Control Logic stage then latches the vertical data bits 4 through 13 into the Y Input Mux/Latch stage using the YSTROBE signal.

While the Y Input Mux/Latch stage is latching in data bits 4 through 13, the Overrange Detector stage is looking at the 3 most significant bits from the Data Bus (13 through 15) which contain vertical display position information. The data from the Y Input Mux/Latch and Overrange Detector stages is latched into the Y Output Latch stage producing 10 bits of digital waveform information to the Vertical D/A (digital to analog) Converter stage and two bits to the Vertical Current Summer and Amplifier stage. The output from the Overrange Detector indicates whether the digital waveform information (i.e. data bits 4 through 13) will result in an on-screen display.

The Vertical D/A Converter produces an analog current output that corresponds to the vertical information in data bits 4 through 13. If the Overrange Detector stage indicates that the data bits are on-screen, the analog current output is converted to a voltage by the Vertical Current Summer and Amplifier stage and fed through the Output Selector stage to drive the oscilloscope Vertical Amplifier circuit. (See Vector Generator for vector display discussion.) However, if the Overrange Detector indicates that the waveform data bits are off-screen (i.e., either high or low), the Vertical Current Summer and Amplifier stage selects a current level that will produce a single-value off-screen display.

The initial conditions for the X Counter/Latch in the horizontal section are set by the microprocessor at the same time as those for the the Y Input Mux/Latch in the vertical section. For the first displayed point, the operation of the circuits from the X Counter/Latch to the horizontal (X) output is the same as that for the vertical (Y) circuitry just described. When these two corresponding output voltages are present at the crt deflection plates, the Control Logic stage turns on the Point Timer stage. This drives the oscilloscope Z-Axis circuit and turns on the display intensity. The display intensity remains on for about 5 microseconds to provide a spot at the prescribed horizontal and vertical coordinates. When this time has elapsed, the Z-Axis intensity is turned off by the Point Timer stage. Thus, the first point on the waveform is displayed.

http://manoman.sqhill.com

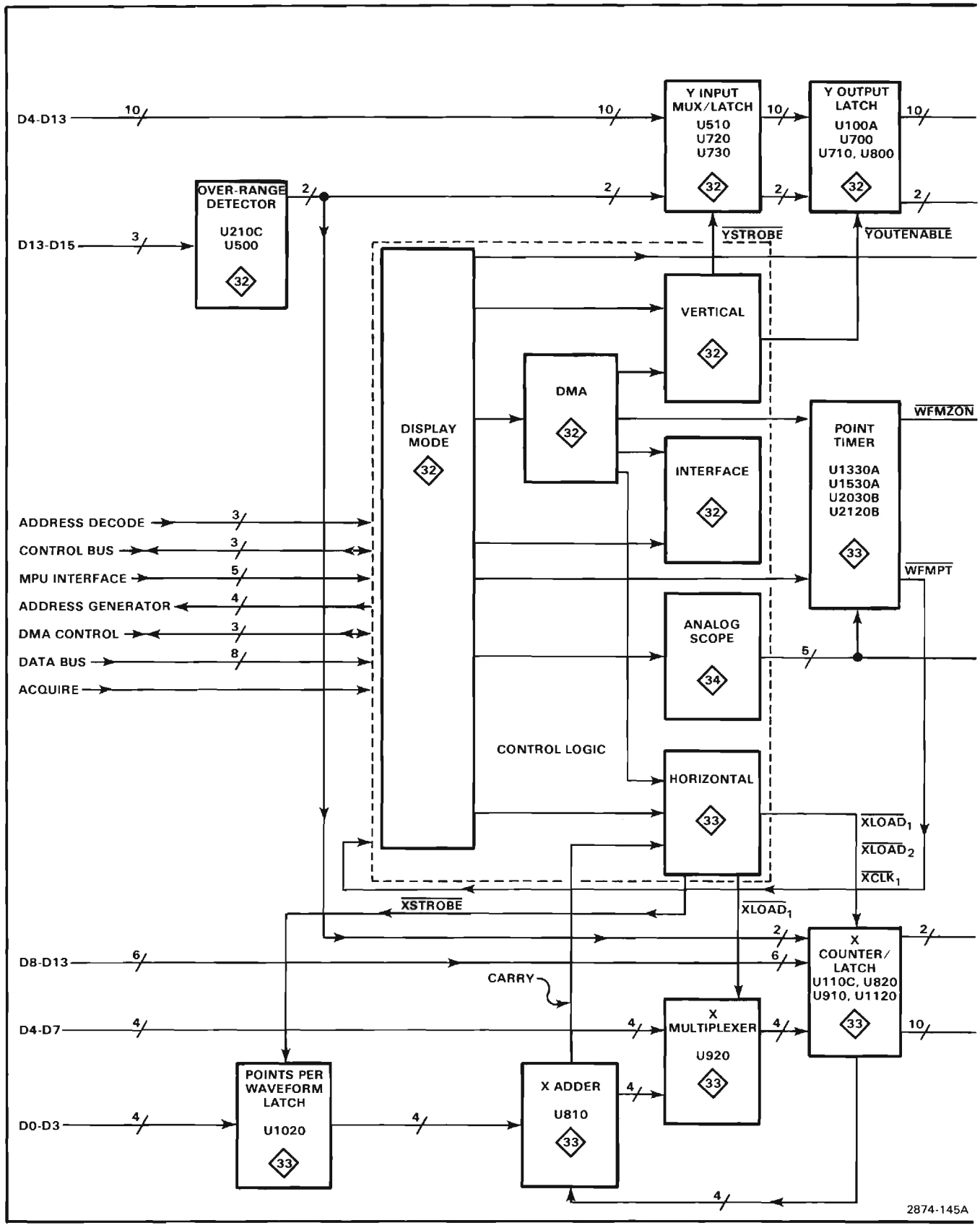

Figure 2-46A. Waveform Data Flow.

http://manoman.sqhill.com

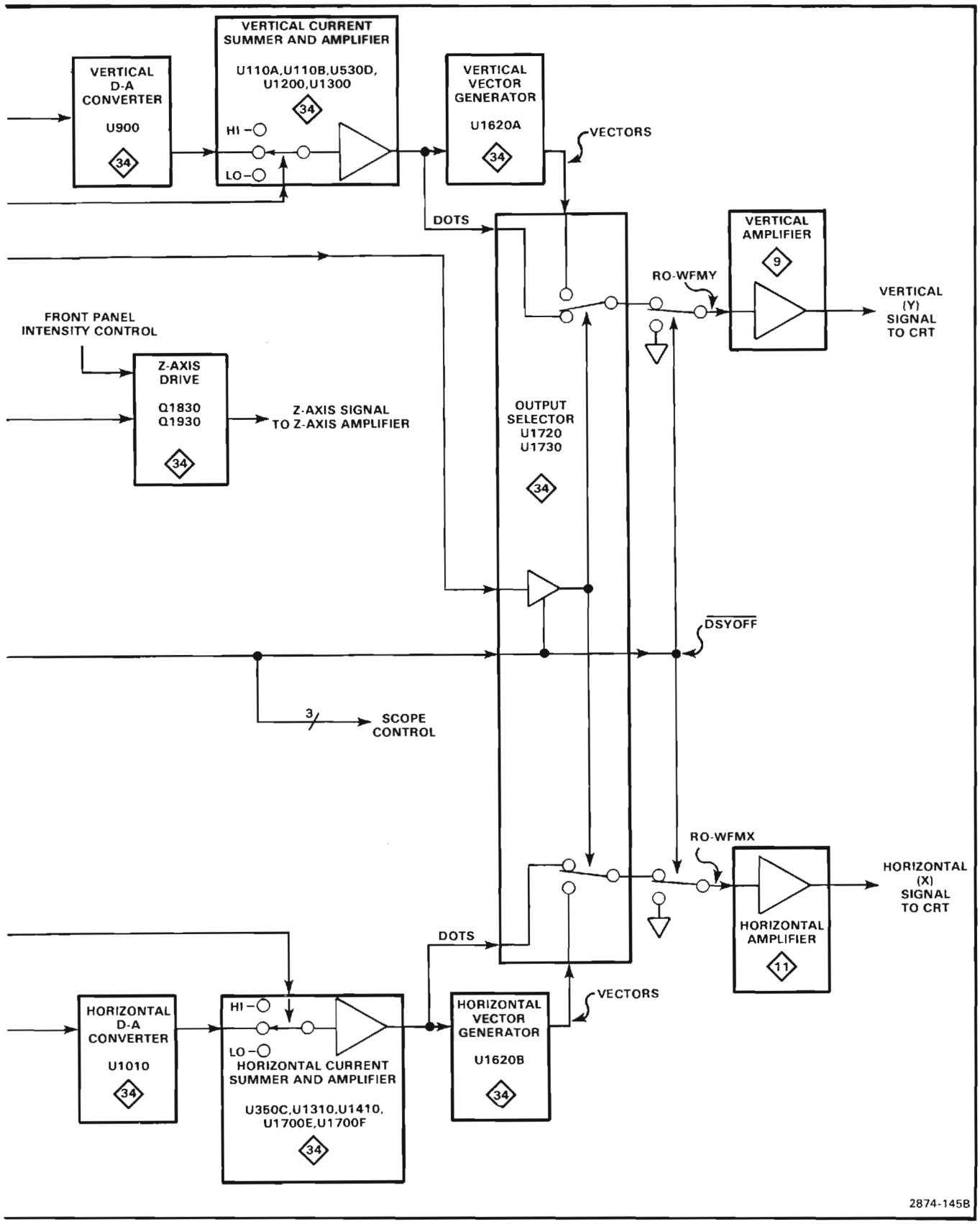

Figure 2-46A. Waveform Data Flow (continued)

http://manoman.sqhill.com

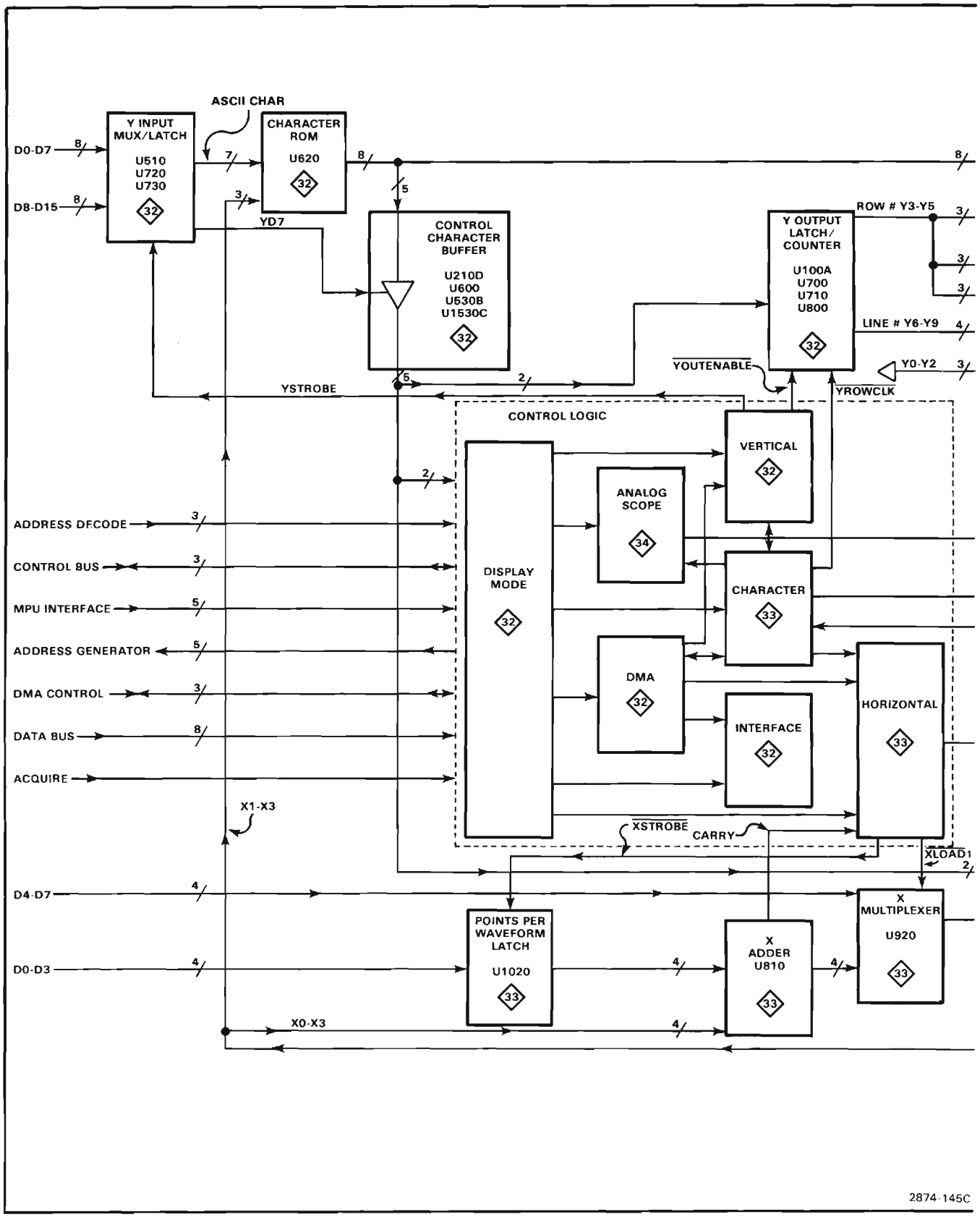

Figure 2-46B. Character Data Flow.

http://manoman.sqhill.com

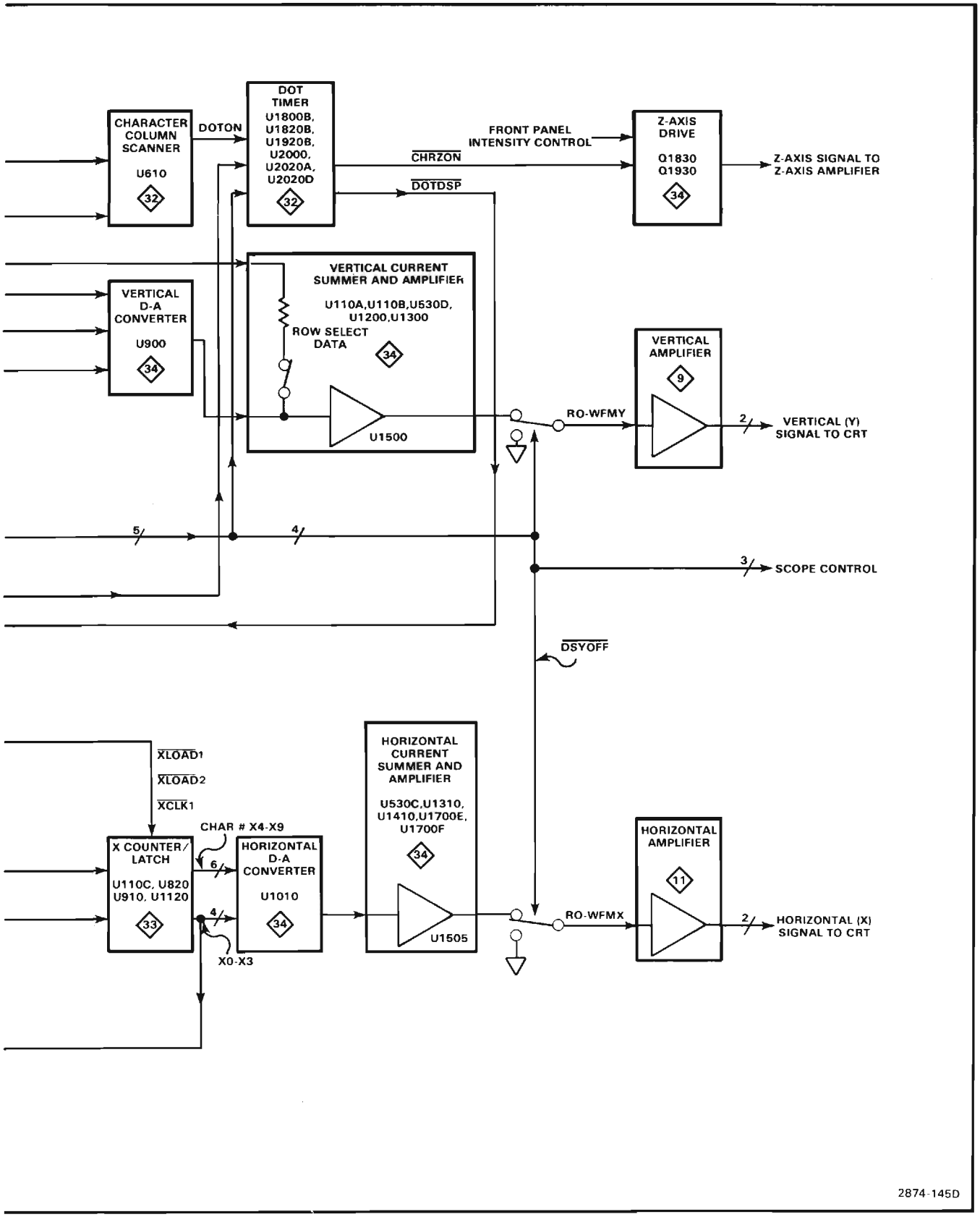

Figure 2-46B. Character Data Flow. (continued)

http://manoman.sqhill.com

Subsequent displayed points on the input waveform are processed by the vertical (Y) circuitry in the same way as described previously. However, the Address Generator circuit shown on diagram 22 now increments by one so that the address generated accesses the next memory location in RAM. This process repeats for each successive displayed point. When the number of selected points per waveform have been displayed, the Display Mode Control Logic stage detects the overflow from the Address Generator and interrupts the microprocessor.

Coincidently, the horizontal (X) display circuitry is also processing the horizontal data for subsequent display points but in a somewhat different manner. Before the first point is displayed, horizontal data bits 8 through 13 are latched into the X Counter/Latch stage by the display Control Logic stage (via address decode lines from the microprocessor). Horizontal data bits 4 through 7 are also latched into the X Counter/Latch circuit from the X Multiplexer stage. After the first point is displayed, data bits 4 through 7 are fed to the X Adder circuit where they are added to the 4-bit points per waveform data word from the Points per Waveform Latch. The corresponding 4-bit output from the X Adder circuit is then clocked back into the X Control/Latch circuit through the X Multiplexer. By iterating this sequence, the X Latch essentially functions as a variable increment counter and the remaining points are displayed successively in fixed horizotal increments that correspond to the selected points per waveform (resolution).

This process can be more fully explained by examining the data output from the X Adder stage at a resolution setting of 1024 points per waveform. For example, if data bits 4 through 7 for the first displayed point were 0000 and the points per waveform data was 0001, which is the data word for a resolution of 1024 points per waveform (i.e., 1000 = 128, 0100 = 256, 0010 = 512, and 0001 = 1024), then the sum of these two data words would be 0001 at the output of the X Adder stage. Thus, 0001 is clocked into the X Counter/Latch and the circuit then operates as previously described. Consequently, the second point is displayed at a horizontal coordinate that corresponds to 1/1024th of the distance across the crt display area.

Now, for the third point, the 4 data bits in the X Counter/Latch are 0001 which is added to 0001 (i.e., the data word for 1024 points per waveform) in the X Adder circuit. The sum at the output of the X Adder is then 0010 and the third point is displayed at a horizontal coordinate that is an increment of one from the previous point.

Thus, the X Latch/Counter continues to count by one for each successive displayed point independent of the data on the Data Bus. For the resolution settings of 512, 256 and 128 points per waveform, the X Counter/Latch counts by 2 (0010), 4 (0100) and 8 (1000) respectively between each displayed point which results in resolutions 2, 4 and 8 times less than that for 1024 points per waveform.

When the X Adder stage overflows past 15 (i.e., 1111) a second and third counter in the X Counter/Latch stage continues the count until all the selected points per waveform are displayed.

X-Y OPERATION. In X-Y operation, the vertical (Y) circuitry operates the same as described for Y-T Operation. The horizontal (X) circuitry operates as follows:

Like Y-T operation, the initial conditions for the Horizontal D/A Converter are set by the microprocessor through the Address Decode lines to the Horizontal Control Logic stage. The DMA Control Logic stage then sends a bus request to the DMA Control circuit (diagram 24) which acknowledges the bus request with a bus grant back to the DMA Control Logic stage. The Interface Control Logic stage then enables the Address Generator (diagram 22).

Unlike Y-T operation, the Address Generator now generates two addresses related to a single point. First, an A Word generator addresses a block of memory in RAM to produce vertical data. Secondly a B Word generator addresses another block of RAM to produce horizontal data. The DMA Control Logic stage generates two consecutive bus requests; one for vertical data and one for horizontal data. Thus, the A Word generator calls for vertical data from the RAM during the first bus request and this data is latched into the Y Input Mux/Latch. The remaining vertical (Y) circuits function as described previously under Y-T Operation. During the second bus request, the B Word generator calls for horizontal data from the RAM and this data, comprised of data bits 4 through 13, along with the Overrange Detector output, is latched into the X Input Counter/Latch. The Horizontal D/A Converter produces an analog current output that corresponds to the horizontal data input.

The Overrange Detector circuit determines whether the display will be on-screen; if not, the current summing switch selects a current that results in a single-valued off-screen display.

The Horizontal Current Summer and Amplifier transforms the analog current output from the Horizontal D/A Converter into a voltage output that is fed through the Output Selector to the oscilloscope Horizontal Amplifier circuit. (See Vector Generator for vector display discussion.)

http://manoman.sqhill.com

When the horizontal (X) and vertical (Y) output voltages are present at the deflection plates, the Control Logic stage turns on the Point Timer stage to drive the oscilloscope Z-Axis circuit and turn on the display intensity. The display intensity remains on for about 5 microseconds to provide a spot at the prescribed horizontal and vertical coordinates. When this time has elapsed, the intensity is turned off by the Point Timer stage. Thus, the first point on the waveform is displayed.

Subsequent sampled points on the input waveform are displayed in the same manner as described previously. Basically, the horizontal circuits function similarly in both Y-T and X-Y operation. Note, however, that in X-Y operation the Points per Waveform Latch and X Adder stages are not used and the position of each displayed point is determined strictly from data latched in from the RAM.

As in Y-T operation, the Counter Stage (A word generator) on diagram 22 increments by one memory location until the selected number of points per waveform are displayed. The Control Logic stage then detects the overflow from the Address Generator circuit and interrupts the microprocessor to shut down the display.

VECTOR GENERATOR. In the previous discussions for both Y-T and X-Y Operation the outputs of the X and Y Current Summer and Amplifier circuits are fed to the Vertical and Horizontal Amplifiers through the Output Selector stage to produce a display comprised of dots or points. The Vector Generator stage allows the generation of a continuous waveform by drawing a line segment between each displayed point. The output voltages from the Horizontal and Vertical Current Summer and Amplifier stages are applied to the Horizontal and Vertical Vector Generator stages and the operator may switch the Output selector to display in DOTS or VECTor mode. In VECT mode, the 5 microseconds that the intensity is on, the output voltage at the crt deflection plates starts at an initial value and changes to a final. Now, instead of dots or points displayed, a line is drawn between each point to produce a vector display.

CHARACTER MODE. In character mode, the crt display is divided up into 16 lines and 40 columns for character display. With this format, 40 characters may be displayed in any of 16 individual lines for a total of 640 characters displayed on the screen. Each character is defined as an 8 (column) × 8 (row) dot matrix with spacing between characters achieved as explained in the Display D/A and Amplifier description. See Figure 2-47 for the matrix representation of individual characters within the 7854 Character Set.

As in the Waveform mode, the microprocessor sets up the Y Input Mux/Latch and the X Counter/Latch which produce the inputs to the Vertical and Horizontal D/A Converters. This sets the corresponding vertical and horizontal analog outputs to specific voltages which correspond to the starting point for a character display; the upper left-hand corner of the crt. The display is then started in Character mode and the DMA Control Logic produces a bus request to the DMA Control circuit (diagram 24) which answers with a bus grant. When the DMA Control Logic stage gets the bus grant, it turns on the Address Generator circuit on diagram 22, producing the required address for memory access. The RAM then puts 16 bits of data onto the data bus and eight bits (0 - 7) are latched into the Y Input Mux/Latch. Of those 8 bits, the 7 least significant bits represent a character in ASCII code and the 8th bit is a control bit for circuitry on the display board. The ASCII code at the output of the Y Input Mux/Latch now selects the appropriate character out of the Character ROM, which has 8 outputs corresponding to one full column of the 8 × 8 character matrix. Each of the individual outputs correspond to one of the 8 rows of the matrix. If the dot of a specific row is to be displayed, the corresponding output of the ROM will be HI. If it is not to be displayed it will be LO.

The Character Column Scanner now begins to clock the individual rows of each column, looking first at the upper portion of the column. The Y Output Latch/Counter produces 3 binary coded inputs to the Character Column Scanner and, as it counts down, it looks sequentially at each one of the 8 outputs of the character ROM. Looking at the first output, it determines whether it is HI or LO. If HI, the Dot Timer turns on. At the same time, the Dot Timer shuts off the Y Output Latch/Counter so it does not sequence to the next row of that particular column. The Z-axis is turned on and, since the Horizontal and Vertical D/A Converters are producing currents to drive the Vertical and Horizontal Amplifiers, a dot is produced at a specific location on the crt. Each dot is turned on for about 600 nanoseconds and when this time has elapsed, the dot timer shuts off allowing the Y Output Latch/Counter to start counting again.

As it counts, the Y Output Latch/Counter decrements the inputs to the Character Column Scanner and looks at the next row of the column. It continues to scan down each row of the column until it sees that another dot should be displayed, at which time the dot timer will turn back on, shutting off the Y Output Latch/Counter. That dot will be displayed at the point on the crt determined by the new (decremented) value at the vertical output. When it reaches the bottom of the column (the eighth row), the Y Output Latch/Counter will underflow (borrow), incrementing the X Counter/Latch by one. This increments the Character ROM to the next column (with

http://manoman.sqhill.com

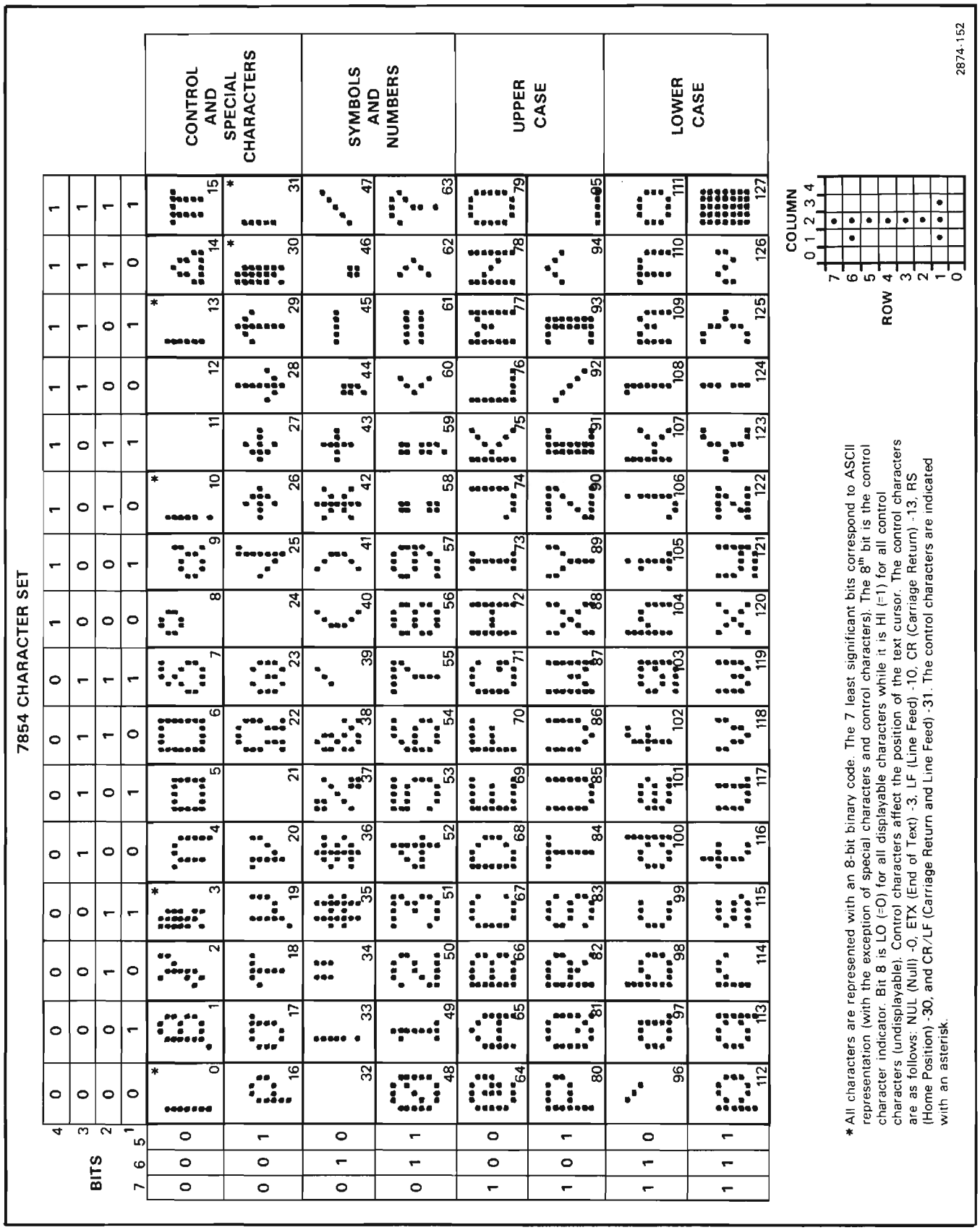

* All characters are represented with an 8-bit binary code. The 7 least significant bits correspond to ASCII representation (with the exception of special characters and control characters). The 8th bit is the control character indicator. Bit 8 is LO (=0) for all displayable characters while it is HI (=1) for all control characters (undisplayable). Control characters affect the position of the text cursor. The control characters are as follows: NUL (Null) -0, ETX (End of Text) -3, LF (Line Feed) -10, CR (Carriage Return) -13, RS (Home Position) -30, and CR/LF (Carriage Return and Line Feed) -31. The control characters are indicated with an asterisk.

Figure 2-47. 7854 Character Set.

http://manoman.sqhill.com

a new set of data), and again the Y Output Latch/Counter begins to count down. The Column Scanner sequentially checks each of the 8 outputs of the Character ROM to see if it is HI or LO. If HI, the dot timer again is turned on, shutting off the Y Output Latch/Counter and a dot is displayed at the new horizontal and vertical deflections. This happens for each consecutive column up to the fifth column. The X Latch/Counter detects the end of the fifth column and the next three columns of the 8 × 8 matrix are not displayed. The X Counter/Latch shuts off the scanning and the Y Output Latch/Counter and the X Counter/Latch are now held in a specific state. Skipping these three columns provides horizontal spacing between characters.

The Control Logic then produces another bus request and the DMA Control circuit gives back a bus grant. When the first character was retrieved from memory, the Address Generator stage produced a specific address, of which data bits 0 - 7 were latched into the Y Input Mux/Latch. For the second character, the address has not incremented and this memory location will be read again, this time latching data bits 8 - 15 into the Y Input Mux/Latch.

Two characters, each 8 bits wide, are put into each memory address, thereby using 100% of memory. At the end of display of this second character, the memory address is incremented for display of the next two characters.

When 8 bits are latched into the Y input , the lower 7 represents and ASCII character and the 8th bit is called the control bit. There are 5 control characters that control the position of a character on the crt screen. If the eighth bit (the control bit) that was latched in is HI, the character is a control character. Control characters are not displayed but rather affect position. The different control characters are a Line Reset to reset the display to a new line, Line Feed to move down a line, Carriage Return to go back to the beginning of that line, Home Key to return the display to the upper left hand corner of the crt and End of Text to interrupt the microprocessor after it has displayed all the characters that it is supposed to. After an End of Text character, the microprocessor can start a new display cycle in any mode that is necessary.

The End of Text control character is used to interrupt the microprocessor instead of the Address Generator as previously described because the Address Generator only overflows at 128, 256, 512 or 1024 increments and the possibility of displaying almost any number of characters up to 640 exists. This character is read only after all displayable characters have been displayed.

Of the 10 outputs to the Vertical D/A Converter stage, the upper four bits represent the 16 lines on the crt screen, while the next 3 bits represent the 8 individual rows within the character itself. The lower 3 input bits are unused. In the Horizontal D/A Converter, the upper 6 bits represent 64 possible characters of which only 40 are displayable. The lower 4 bits represent 16 individual columns within a character, only eight of which are used (See Display D/A and Amplifier description).

TABLE 2-7
Signal Line Description Table

Signal Name	Edge Conn. In/Out	Sub-Mode	Wave Form No.	Description
ADDADV	P109-4 OUT	ALL	21	Address Generator advance: positive edge active; indicates that address generator should be incremented to the next address.
$\overline{\text{ADDBUFF}}$	P109-7 OUT	ALL	9,10,11	Address Generator Buffer enable: active LO; enables the address generator buffers to drive the system address bus.
$\overline{\text{ADRDLY}}$		ALL		Address Delay: indicates a delay time, allowing the Horizontal D/A and Amplifier and the Vertical D/A and Amplifier to settle to new values.
		CHARACTER	38	Allows access time for character ROM whenever address inputs to ROM change.

http://manoman.sqhill.com

TABLE 2-7(CONT)
Signal Line Description Table

Signal Name	Edge Conn. In/Out	Sub-Mode	Wave Form No.	Description
		X-Y	39	Starts during $\overline{\text{BGDSY}}$. Lasts for ~ 950 ns.
		Y-T	40	Starts during $\overline{\text{BGDSY}}$. Lasts for ~ 1.1 μs.
ADSTRB		X-Y	43	Address Strobe: on rising edge, one-shot multivibrator is
		Y-T	44	triggered, enabling the Z-Axis for display of a point.
$\overline{\text{ADXD}}$	P109-P IN	ALL	26	Address Horizontal Display: memory address Hex E012; active LO; indicates that the microprocessor is sending information to the horizontal circuitry via the data bus.
$\overline{\text{ADYD}}$	P109-N IN	ALL	1	Address Vertical Display: memory address Hex E014; active LO; indcates that the microprocessor is sending information to the vertical circuitry via the data bus.
AWD'.SB	P109-3 OUT	X-Y		A Word Address Generator Least Signficant Bit: active HI; for cursor display, to control the polarity of the A Word address generator.
BGDSY		ALL	CHAR 15 X-Y 16 Y-T 17	Bus Grant Display: active HI, indicates that the DMA controller has given authorization to the display DMA Control Logic to use the system address, data and control busses.
$\overline{\text{BGDSY}}$	P109-F IN	ALL		Active LO; inversion of BGDSY.
$\overline{\text{BRDSY}}$	P109-C OUT	ALL	22,23,24	DMA Bus Request for Display: active LO; indicates that Display Control Logic would like to use the system busses to obtain information from memory.
BRWDSEL	P109-5 OUT	X-Y	14	B Word Address Generator Select: active HI; indicates that B Word Address generator should be used instead of A Word Address generator.
$\overline{\text{CHR}}$		ALL		Character Mode Bit: active LO; inverted display mode word bit 8 indicating that display is in character mode.
CHR		CHARACTER		Character Mode Bit: active HI; display mode word bit 8 indicating that current display is for character display.
CHR/$\overline{\text{WFM}}$	P109-P OUT	ALL		Character or Waveform Display: HI indicates character display while LO indicates waveform display to Auto Focus circuitry in the analog portion of the instrument.
$\overline{\text{CHRIDLE}}$		CHARACTER		Character Mode Idle: active LO; indicates that the character display mode is idle and no characters are being displayed.
CHRSCAN		CHARACTER	27	Character Scanning: active HI; indicates that the 5 × 8 dot matrix of a character is being examined for information concerning which dots should be displayed.

http://manoman.sghill.com

TABLE 2-7(CONT)
Signal Line Description Table

Siganl Name	Edge Conn. In/Out	Sub-Mode	Wave Form No.	Description
$\overline{\text{CHRSCAN}}$		CHARACTER	28	Inversion of CHRSCAN.
$\overline{\text{CHRZON}}$		CHARACTER	37	Character Z-Axis Drive On: active LO; indicates that current flows to the Z-Axis to control the intensity of each displayed dot of a character.
$\overline{\text{COLADV}}$		CHARACTER	5	Character Column Advance: active LO; indicates that the present column of the character has finished being scanned and the next column should begin.
COLSEL0 COLSEL1 COLSEL2		CHARACTER		Character Column Select 0,1,2: binary coded lines indicating which of 5 columns is currently being scanned.
$\overline{\text{CR}}$		CHARACTER		Carriage Return: active LO; 1 of 5 control character lines indicating that the current character position should be reset to the beginning of the line.
CURS		X-Y		Cursors mode bit: active HI; display mode word bit 9 indicates that current X-Y display is for cursors.
$\overline{\text{DMDWRD}}$	P109-16 IN	ALL	20	Display Mode Word: Memory Address HEX E000 active LO; indicates that the microprocessor is setting up the mode of the next display cycle.
$\overline{\text{DOTDSP}}$		CHARACTER	41	Dot Display: active LO; indicates that the dot timer has recognized that the present dot of 5 × 8 matrix should be displayed.
DOTON		CHARACTER	7	Dot Display On enable: active HI; indicates that column scanner has recognized that present dot of 5 × 8 matrix should be on and enables the dot timer accordingly.
$\overline{\text{DOTSTB}}$		CHARACTER	6	Dot Strobe: negative edge active; determines if Z-Axis should turn on to display a dot of a character.
$\overline{\text{DSPIDLE}}$		ALL		Display mode Idle: active LO; indicates that the display circuitry is no longer in the process of displaying anything; display is idle.
DSPIDLE		ALL		Inversion of $\overline{\text{DSPIDLE}}$.
DSY		ALL		Display mode bit: active HI; indicates that system is in display mode.
$\overline{\text{DSYOFF}}$		ALL		Display Off: active LO; indicates that the display analog outputs and analog control signals may produce a realtime display.

http://manoman.sqhill.com

TABLE 2-7(CONT)
Signal Line Description Table

Signal Name	Edge Conn. In/Out	Sub-Mode	Wave Form No.	Description
DSYON		ALL		Display On: active HI; enable signal for analog control logic indicating that a stored point (character or waveform) may be displayed.
		X-Y Y-T		HI at all times during a display cycle.
$\overline{\text{DSYWE}}$		ALL	12	DMA Display Write Enable: active LO; indicates that information on the data bus is valid and should be latched on rising edge.
ECHR		CHARACTER		Even Byte of Character Word: active HI; indicates that the character control logic is selecting the even byte of the 16-bit character word (D8-D15) for the vertical input latch data.
$\overline{\text{ENDCHR}}$		CHARACTER	35	End Column of Character: active LO; indicates that the present column of the character being scanned is the last column of that character.
$\overline{\text{EOC}}$		CHARACTER		End of Character: active LO; 1 of 5 control character lines indicating that the control character has been scanned as much as needed.
$\overline{\text{ERO}}$	P109-6 OUT	CHARACTER		End of Character Readout: active LO; indicates that the current character display cycle is finished.
$\overline{\text{ETXT}}$		CHARACTER		End of Text: active LO; 1 of 5 control character lines indicating that the character buffer is empty and character display is complete.
$\overline{\text{FPL}}$		X-Y Y-T		First Point Latch: active LO; indicates that the next point or the present point to be displayed is the first point of the waveform.
HI		Y-T		Out or Range, HI: active HI; indicates that vertical point from memory is off the displayable screen (>5 divs above center screen); from overrange detector.
		X-Y		Also indicates that horizontal point from memory is off the displayable screen (>5 divs to right of center screen).
$\overline{\text{IDSY}}$	P109-L			Display Interrupt: active LO; interrupt to microprocessor indicating that display cycle is finished.
$\overline{\text{LF}}$		CHARACTER		Line Feed: active LO; 1 of 5 control character lines indicating that character display should increment the line count.

http://manoman.sqhill.com

TABLE 2-7(CONT)
Signal Line Description Table

Signal Name	Edge Conn. In/Out	Sub-Mode	Wave Form No.	Description
LO		Y-T		Out of Range, LO: active HI; indicates that vertical point from memory is off the displayable screen (>5 divs below center screen); from overrange detector.
		X-Y		Also indicates that horizontal point from memory is off the displayable screen (>5 divs to the left of center screen).
LR		CHARACTER		Line Reset: active HI; 1 of 5 control character lines positioning vertical output latch/counter to the last line (line 16).
$\overline{\text{MEM}}$	P109-17 OUT	ALL		Memory Enable: active LO; indicates that information on the address bus is valid to use (is stable). This is a control bus line.
OCHR		CHARACTER		Odd Byte of Character Word: active HI; indicates that the character control logic is selecting the odd byte of the 16-bit character (D0-D7) for the vertical input latch data.
$\overline{\text{RBR}}$	P109-D IN	ALL	8	Remove DMA Bus Request: active LO; control line from DMA controller indicating that Bus Request should be removed.
$\overline{\text{RESET}}$	P109-T IN	ALL		System Reset: active LO; indicates that display circuitry should be initialized.
ROINT	P109-9 IN	CHARACTER		Character Readout Intensity Control: analog level of 0 V to -15 V controls intensity of displayed characters.
$\overline{\text{ROOF}}$	P109-K IN	CHARACTER		Readout Off: active LO; turns off character readout.
ROWSEL0 ROWSEL1 ROWSEL2		CHARACTER		Character Row Select 0, 1 and 2: binary coded lines indicating which of the 8 rows of a character is being scanned.
RO-WFMX	J12 OUT	ALL		Readout-Waveform Display Horizontal Information; analog level of about -4.5 V to +4.5 V; horizontal analog information to drive horizontal amplifier.
RO-WFMY	J11 OUT	ALL		Readout-Waveform Display Vertical Information: analog level of about -4.5 V to +4.5 V; vertical analog information to drive vertical amplifier.
RO-ZAXIS OUT	P110-E	ALL		Readout-Waveform Z-Axis Current Drive: 0-3.5 mA; Z-Axis drive to control intensity of display.

http://manoman.sqhill.com

TABLE 2-7(CONT)
Signal Line Description Table

Signal Name	Edge Conn. In/Out	Sub-Mode	Wave Form No.	Description
RT		ALL		Real Time mode bit: active HI; display mode word bit 12 indicating that realtime waveform is to be interlaced with the digital display.
RTMOFF		ALL		Real Time Display Off: active HI; indicates that the analog scope should be shut off so display may use crt.
$\overline{\text{RTMZOFF}}$	P109-r OUT	ALL		Real Time Z-Axis Off: active LO; indicates that display system is to use crt. Analog Z-Axis is disabled.
R/$\overline{\text{W}}$	P109-U OUT	ALL		READ/WRITE control bus line: HI indicates a read from data bus. LO indicates a write to data bus.
$\overline{\text{STADSY}}$	P109-12 IN	ALL	19	Start Display: active LO; hardware control flag from microprocessor indicating that a display cycle should start. Cycle begins on rising edge.
VECT		X-Y Y-T		Vector mode bit: active HI; indicates that waveform should be displayed in vector mode. Display mode word bit 3.
$\overline{\text{WE}}$	P109-18	ALL		Write Enable: active LO; control bus signal indicating that data on the data bus is valid.
WFMINT	P109-N	X-Y Y-T		Waveform Intensity Control: analog level 0 V to -15 V; controls intensity of waveform points.
$\overline{\text{WFMPT}}$		X-Y Y-T	45	Waveform Point Display: active LO; indicates that a point from memory has been obtained and point has begun to be displayed. When in both stored and scope mode (BOTH), only alternate points of waveform will be displayed.
$\overline{\text{WFMZON}}$		X-Y Y-T	46	Waveform Display Z-Axis On: active LO; turns the crt Z-Axis current drive on.
WS1 WS2		CHARACTER		Waveform input Select 1 and 2: active HI; together select the odd or even byte of the character word to be latched into the Y Input Mux/Latch.
		Y-T X-Y		When WS1 is LO, D4-D7 is selected. When WS2 is LO, D8-D11 is selected.
XCLK		ALL		Horizontal Clock: active HI.
		CHARACTER	30	Increments the horizontal counter by 2 to form the next column of the character.
		X-Y	31	Latches the horizontal information on the data bus into the horizontal latch.
		Y-T	32	Increments the horizontal counter by the points per waveform variable stored in the points per waveform latch.

http://manoman.sqhill.com

TABLE 2-7(CONT)
Signal Line Description Table

Signal Name	Edge Conn. In/Out	Sub-Mode	Wave Form No.	Description
$\overline{\text{XCLK1}}$ $\overline{\text{XCLK2}}$		ALL		Inversion of XCLK.
$\overline{\text{XDMA}}$		X-Y	13	Horizontal Point Direct Memory Access: active LO; indicates that the present or next DMA cycle will contain horizontal information instead of vertical information.
XHI		X-Y		Horizontal Offscreen Right: active HI; indicates that point is off screen (>5 divisions right of center screen).
XLO		X-Y		**Horizontal Offscreen Right; active HI; indicates that point is off screen (>5 divisions right of center screen).**
$\overline{\text{XLOAD1}}$		X-Y Y-T	34	Horizontal Load 1: active LO; indicates that information from the data bus is being loaded into a portion of the horizontal latch.
$\overline{\text{XLOAD2}}$		X-Y Y-T	29	Horizontal Load 2: active LO; indicates that information derived from present horizontal location and the points per waveform information will be loaded into the 4 LSB of the horizontal latch on the next $\overline{\text{XCLK1}}$.
		CHARACTER		Enables the 4 LSBs of the horizontal latch to increment by 2 on next $\overline{\text{XCLK1}}$.
$\overline{\text{XSTROBE}}$		CHARACTER	33	Horizontal Increment Strobe: active LO; indicates that microprocessor is loading the character column increment (=2) into the points per waveform latch.
		Y-T		Indicates that microprocessor is loading points per waveform increment information from the data bus into the points per waveform latch.
$\overline{\text{XWE}}$		X-Y		DMA Horizontal Write Enable: active LO; indicates that the information present on the data bus is valid horizontal information.
XY		X-Y Y-T		X-Y mode bit: active HI; display mode word bit 5; when HI, indicates that current display cycle is in X-Y mode; when LO, indicates that current display cycle is in Y-T mode.
XYINH	P109-s OUT	ALL		Horizontal-Vertical Analog Inhibit: active HI; indicates that horizontal and vertical analog sections have been disabled so digital display can use crt.
$\overline{\text{XYON}}$	P110-4	ALL		Analog scope Horizontal-Vertical ON: active LO; indicates that analog data from plug-ins is to be sampled.

http://manoman.sqhill.com

TABLE 2-7(CONT)
Signal Line Description Table

Signal Name	Edge Conn. In/Out	Sub-Mode	Wave Form No.	Description
YD7		CHARACTER		Vertical Input Latch Data Bus 7: active HI; control character bit indicating that remaining 7 bits represent a control character.
YHI		X-Y Y-T		Vertical Off Screen Up: active HI; indicates vertical point is off crt screen; >5 divs above center screen.
YLO		X-Y Y-T		Vertical Off Screen Down: active HI; indicates vertical point is off crt screen; >5 divs below center screen.
$\overline{\text{YOUTENABLE}}$		X-Y Y-T	2 3	Vertical Output Latch Enable: active LO; indicates that data from the Vertical Input Mux/Latch is being transferred to the Vertical Output Latch/Counter.
$\overline{\text{YROWCLK}}$		CHARACTER	42	Vertical Row Clock: active LO; decrements the row counter portion of the Y Output Latch/Counter on every other count of the 6-MHz Φ1 clock.
YSTROBE		X-Y Y-T	4	Vertical Input Latch Strobe: active HI; indicates that vertical information from the data bus is being latched into the Vertical Input Mux/Latch.
		CHARACTER		Indicates that character information is being latched into vertical input latch.
ZON		ALL		Z-Axis On enable: active HI; indicates that the digital display may turn on the Z-Axis if appropriate.
3 MHz Φ1	P109-13 IN	CHARACTER	25	Three-megahertz clock, phase 1: active HI; free-running clock from microprocessor board. Frequency of 3-MHz with about 25% duty cycle. Used for timing purposes.
3 MHz Φ3	P109-14 IN	ALL	25	Three-megahertz clock, phase 3: active HI; free-running clock from microprocessor board. Frequency of 3-MHz with about 25% duty cycle. Used for timing purposes.
6 MHz Φ1		CHARACTER	36	Six-megahertz clock, phase 1: active HI; free-running clock with frequency of about 6-MHz with about 50% duty cycle. Used for timing purposes.
8 KHz		CHARACTER		Eight-kilohertz mode bit: active HI; when LO, indicates that characters should be displayed one immediately following the preceding one with no time delay between characters. When HI, indicates that characters should be displayed one every 100-125 μsec. Scope mode only.
5 KHz Φ1 5 KHz Φ2		CHARACTER	18	Five-kilohertz phase 1 and 2; from Timer in RO Acquire circuitry; indicates when the next character readout should begin (in SCOPE mode only).

http://manoman.sqhill.com

34

DISPLAY D/A AND AMPLIFIER

The Display D/A and Amplifier circuitry provides conversion of the 10-bit vertical and horizontal binary data codes from the Vertical and Horizontal Display and Control circuits to analog voltage levels, providing vertical and horizontal deflection for digitized waveforms and characters to be displayed on the crt, either in dot or vector formats. A schematic of the Display D/A and Amplifier circuit is given on diagram 34 in Section 7, Diagrams and Circuit Board Illustrations. The schematic is divided by gray shaded lines separating the circuitry into major stages. The following description uses these stage names to aid in locating and identifying the components and portions of circuitry described.

HORIZONTAL AND VERTICAL D/A CONVERTER

The Horizontal and Vertical D/A (digital to analog) Converters operate in the same manner. Therefore, only the Horizontal D/A Converter will be discussed, with any differences noted applicable to the Vertical D/A Converter.

The Horizontal D/A Converter stage consists of U1010 and accepts 10-bit binary codes from the Horizontal Display and Control circuit (diagram 33) at its inputs, pins 4 through 13, representing unique horizontal crt displacements. This 10-bit code allows for the sinking of 1024 unique analog currents at its output, pin 3, from the Horizontal Current Summer and Amplifier stage, each resulting in a unique horizontal displacement of the crt beam (see Figure 2-48).

The voltage reference levels at input pins 15 and 16 determine the maximum amount of current the device may sink at its output, pin 3, in the case of all 10 inputs being HI. The $-V_{REF}$ is a HI impedance input and the -10 volt level determined by voltage divider R1103 and R1102 is sensed at pin 15, resulting in a similar level at pin 16. This causes 1 mA of current to flow in R1110. This current is doubled internally to 2 mA and is the maximum current the device may sink at pin 3. This current may be divided into 1024 (2^{10}) equal parts, any multiple of which is representative of a valid 10-bit code at the device's input pins.

Pin 16, the $+V_{REF}$, is also tied to the Horizontal Current Summer and Amplifier stage to change this reference level in the case of a character, rather than a digitized waveform display. This function will be discussed in the Horizontal Current Summer and Amplifier stage description.

The Vertical D/A Converter stage varies from the above description only in that its inputs are derived from the Vertical Display and Control circuit (diagram 32) and that the voltage reference level at pin 16 is always fixed.

HORIZONTAL CURRENT SUMMER AND AMPLIFIER

The Horizontal Current Summer and Amplifier circuit algebraically adds currents from various functional sources resulting in a combined current flowing in R1511 via R1513 and Gain adjustment R1300. This current results in a voltage at output pin 6 of U1505 that varies inversely and proportionally to any current dependent voltage change applied to input-pin 2 of U1505. A change in current within the Horizontal Current Summer and Amplifier stage and thus the output voltage at pin 6 of U1505 may be caused by several different events occuring.

Assume that the semiconductor switches U1410 and U1310A are open and U1310B is closed due to the CHR (character) level being HI and the X HI and X LO levels being LO. This is the condition present when a digitized waveform is being displayed. Any change of data at the inputs of the Horizontal D/A Converter results in a change in current flowing in R1511 and thus a change in the voltage at the output of U1505.

If the overrange detector determines that a point of a waveform to be displayed will be outside of the normal crt display area (as in the case of expanding a waveform horizontally), either the X HI or X LO levels from the Horizontal Display and Control circuit will go HI when these points are to be displayed. This HI opens U1310B and closes either U1410A or U1410B, depending on which side of the normal crt display area the point to be displayed would fall. When one of these switches closes, a predetermined amount of positive or negative current flows in R1511. Any horizontal value outside of the normal crt display area results in only two possible horizontal displacements, regardless of what the magnitude of its displacement would have normally been.

http://manoman.sqhill.com

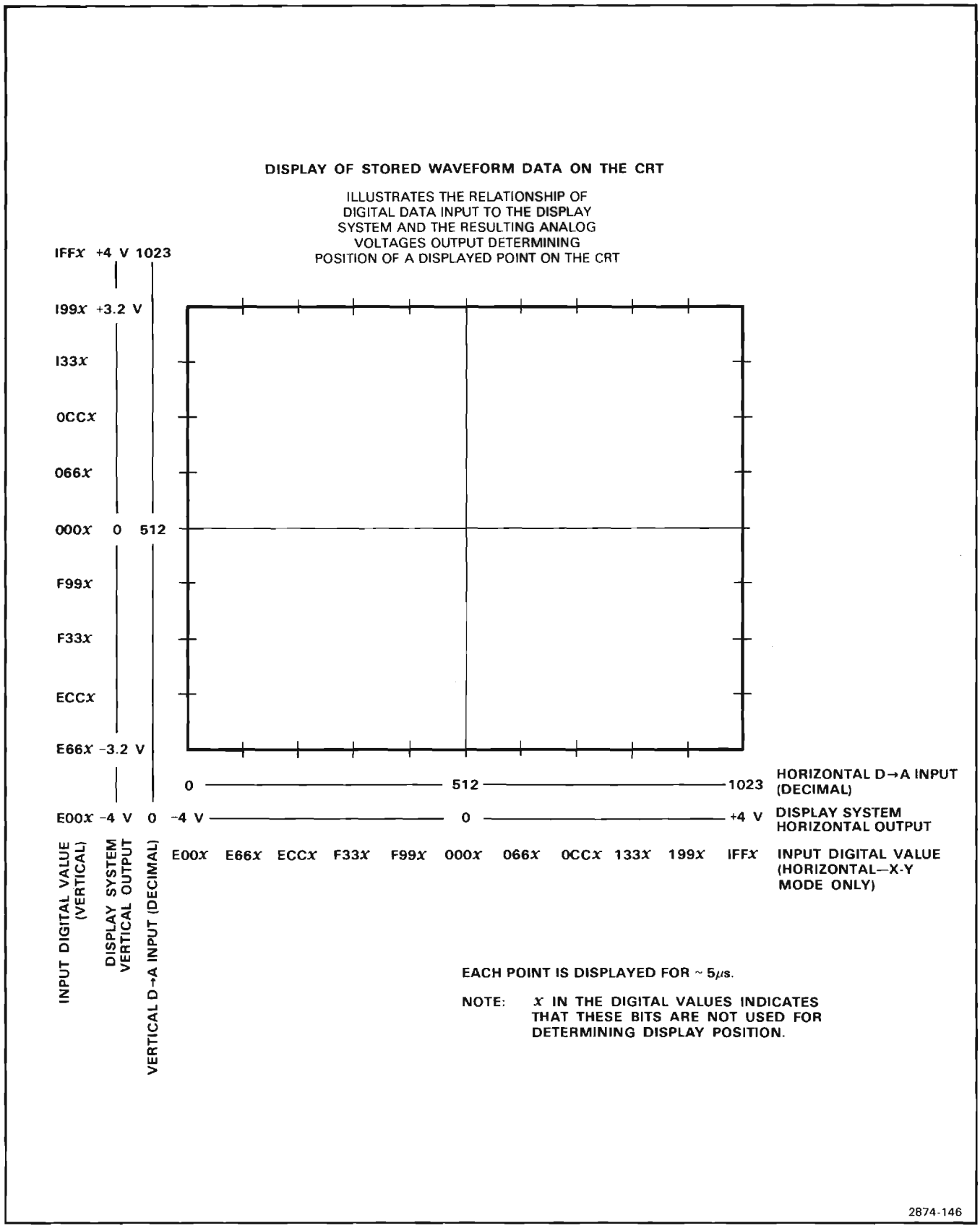

Figure 2-48. Crt Display.

http://manoman.sqhill.com

Assume now that the switches within U1410 are open, U1310B is closed, and U1310A now closes with the presence of a LO $\overline{CHR}$ level at pin 3 of U1310A from the Vertical Display and Control circuit (diagram 32). These are the conditions necessary for the display of an alphanumeric character on the crt. Normally, when displaying a digitized waveform, the data applied to the inputs of the D/A Converter, U1010, resulted in a specific current flowing through R1511. Now, however, since U1310A is closed, additional current sinking capability is added to U1010 due to the increased reference current from ground to pin 16 of U1010 through R1210, U1310A, R1200 and R1105. This effectively increases the "apparent" gain of the Horizontal Current Summer and Amplifier stage.

During normal high resolution display of a digitized waveform, it takes 1024 horizontal points or steps to sweep the crt beam from one side of the crt display graticule to the other. During the display of a line of 40 alphanumeric characters, however, only 640 of these horizontal points would be used. By increasing the "apparent" gain of the Horizontal Current Summer and Amplifier stage, these 640 steps will sweep the crt beam completely across the face of the crt. The CHG (character horizontal gain) adjustment, R1200, is used to accurately adjust this gain so that the 40 alphanumeric characters fill the horizontal length of the crt graticule. The Horizontal Offset adjustment, R1205, is used to center the alphanumeric display on the crt. Horizontal Gain adjustment, R1300 sets the overall gain of this stage.

VERTICAL AND HORIZONTAL VECTOR GENERATOR

Operation of the Vertical Current Summer and Amplifier stage is similar to that just described for the Horizontal Current Summer and Amplifier when displaying digitzed waveforms. Switches within U1300 are normally open while U1200A is normally closed to pass the signal currents from the Vertical D/A Converter, U900, to the current amplifier, U1500. As before, if the microprocessor determines that point to be displayed will be outside the predetermined limits (±5 cm from graticule center) either the Y HI or Y LO level from the Vertical Display and Control circuit will go HI. This opens U1200A and either a positive or negative current flows in R1603, depending on whether the upper or lower limit has been exceeded. Only two vertical deflections are possible for points outside the predetermined limits.

During display of an alphanumeric character, the switches with U1300 are once again open while U1200A and U1200B are closed.

Each alphanumeric character is displayed in the form of a 5 × 8 dot matrix within a larger 8 × 8 matrix, (see Fig. 2-47). Since each character is only 5 columns wide, the other three columns form a separating boundary between characters, thus, adequate horizontal spacing is achieved. The vertical component of each character, however, uses all of the eight vertical positions available. To keep characters from blending into those above and below them, each character must be reduced in height (see Fig. 2-49).

This is accomplished by applying currents to the input of the current summer, U1500, that subtract from the total vertical deflection of a character. The 3-bits of the binary code determining which of the 8 possible vertical positions for a point within a character display are applied to current limiting resistors R900, R1001, and R800. Each of the eight possible binary addresses from the Vertical Display and Amplifier circuit (diagram 32), causes a unique amount of current to be subtracted from the vertical deflection current for that character, thereby shrinking the displayed character from what it would have been.

Potentiometer R1106 (CVO) provides adjustment for vertically offsetting the alphanumeric readout display, while R1100 (CVG) sets the gain of the vertical portion of the readout display.

VERTICAL CURRENT SUMMER AND AMPLIFIER

Operation of the Vertical and Horizontal Vector Generators is identical, therefore only a discussion of the Horizontal Vector Generator will be given.

The analog voltage steps at the output of the Horizontal Current Summer and Amplifier stage, pin 6 of U1505, resulting when digitized information is to be displayed, are applied to the input voltage divider of the Horizontal Vector Generator stage, R1512 and R1610. These resistors, along with C1601, L1611, C1610, L1610, C1512 and C1612 form an rcl network that changes these sudden analog steps into a smooth transition from one level to the next. This resulting voltage is applied to the voltage follower, U1620B, to be current buffered. The gain of this stage is set by the Horizontal Vectors Gain adjustment, R1621, and the offset in the position of the vector display may be varied by Horizontal Vectors Offset adjustment, R1620.

http://manoman.sqhill.com

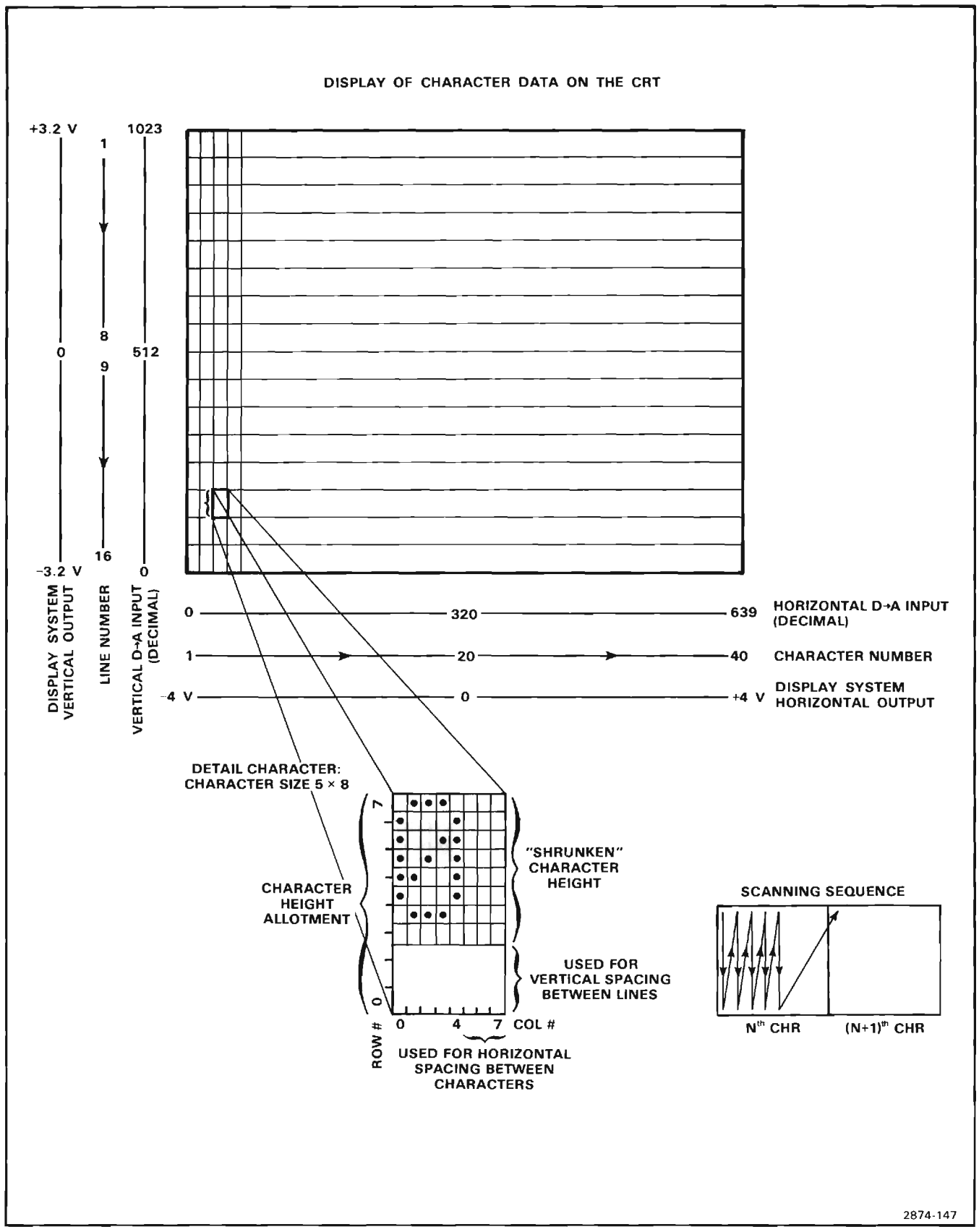

Figure 2-49. Display of Character on crt.

http://manoman.sqhill.com

OUTPUT SELECTOR

The Output Selector stage provides selection of either dot or vector display of digitized waveforms and amplification of the selected signal.

The Output Selector IC, U1720, selects either the dot or vector mode of displaying digitized waveforms depending on the level of the Vect (vector) command at its input pins 1, 8, 9 and 16. When U1720 is enabled, and the Vect command is LO, horizontal and vertical information for a dot display is applied to the Vertical and Horizontal Amplifier circuits (diagrams 9 and 11 respectively). If the Vect command is HI, information for a vector display is applied to these amplifiers. When U1720 is disabled, no digital display information may be applied to the Vertical or Horizontal Amplifier circuits. At this time U1730 is enabled and both outputs are tied to ground potential. Alphanumeric characters are always displayed in dot mode.

Z-AXIS DRIVE

The Z-Axis Drive stage consists of Q1830A, Q1830B, Q1830E, Q1930A, Q1930B, Q1930E and their associated components. This stage determines the intensity of a stored waveform or alphanumeric readout display. The WFMINT (waveform intensity) and ROINT (readout intensity) levels are derived from user adjustable potentiometers on the Front-Panel Controls circuit, diagram 17.

The adjustable analog voltage levels applied to the emitters of Q1830E and Q1930E through R1832 and R1930 determine the amount of current that will flow in the RO-ZAXIS line. When the $\overline{\text{CHRZON}}$ and $\overline{\text{WFMZON}}$ levels are HI, all currents flowing in Q1830E and Q1930E pass through Q1830A and Q1930A respectively. However, when the $\overline{\text{CHRZON}}$ or $\overline{\text{WFMZON}}$ level is LO, the corresponding adjustable analog current flowing in Q1830E or Q1930E now flows through Q1830B or Q1930B respectively. This current is applied to the Z-Axis and Amplifier circuit (diagram 13) and provides the drive signal for display of stored waveforms or readout characters.

ANALOG SCOPE CONTROL LOGIC

The Analog Scope Control Logic stage generates time related control signals used to change the operating modes of the analog portion of this instrument. For the following discussion, refer to the Display D/A and Amplifier schematic and its accompanying timing diagram on diagram 34 in Section 7, Diagrams and Circuit Board Illustrations.

When either the $\overline{\text{XYON}}$ level goes LO (indicating that analog plug-in information is to be sampled) or the RTMOFF level goes LO (indicating that the real-time scope display is on), the $\overline{\text{DSYOFF}}$ (display off) level at the output of U2010D goes LO. RTMOFF is HI whenever the real-time display is shut off as indicated by the RT (real time display) level being LO. Otherwise RTMOFF alternates betwen HI and LO as determined by the $\overline{\text{WFMPT}}$ (waveform points from memory) or $\overline{\text{CHRSCAN}}$ (scope mode character) display control levels.

As $\overline{\text{DSYOFF}}$ goes LO, the Output Selector stage is disabled through Q1820 and U1720. This also grounds the RO-WFMX (horizontal readout-waveform) and RO-WFMY (vertical readout-waveform) outputs through U1730.

When $\overline{\text{DSYOFF}}$ goes LO, ZON (display Z-axis on) is turned off immediately, disabling the Z-Axis current drive. After a delay of about 100-150 ns (caused by R2310, R2311 and C2310), XYINH (X-Y inhibit) and CHR/$\overline{\text{WFM}}$ (character/waveform select) go LO. $\overline{\text{RTMZOFF}}$ (real-time Z-axis off) goes HI about 250-300 ns after $\overline{\text{DSYOFF}}$ goes LO as determined by R2302, R2312 and C2400.

When $\overline{\text{DSYOFF}}$ returns HI, indicating that the display system is in control of the crt display, the Output Selector stage is re-enabled and its outputs are disconnected from ground; $\overline{\text{RTMZOFF}}$ goes LO without a delay. XYINH goes HI after about 100-150 ns, inhibiting real-time deflection signals, and the CHR/$\overline{\text{WFM}}$ level is set depending on the CHR (character) input level to U2010C. About 900-1100 ns after $\overline{\text{DSYOFF}}$ returns HI (determined by R2300 R2301 and C2300), ZON returns HI to allow display of stored waveform or character information.



GPIB

The GPIB (general purpose interface bus) provides a communication and control link so that multiple instruments may interact with each other under the direction of a system "controller". The circuitry providing GPIB interface functions is shown on the GPIB schematic, diagram 35 in Section 7, Diagrams and Circuit Board Illustrations. The schematic is divided by gray shaded lines separating the circuitry into major stages. These stage names are used to aid in locating and identifying the components and portions of circuitry discussed.

All interface and control functions of the 7854 GPIB circuitry are adherent to IEEE standard 488-1978.

http://manoman.sqhill.com

THE IEEE 488-1978 STANDARD

The IEEE 488-1978 standard defines a byte-serial bit-parallel interface system electrically, functionally and mechanically as well as specifying terminology and system limitations. This system implements a 3-wire handshake system with each data transfer from a *"talker"* to one or more *"listeners"*. A *"talker"* is a GPIB device sending data while a *"listener"* is one that receives data from a *"talker"*. All GPIB information is transferred at standard TTL levels using negative logic (i.e. LO=true).

The GPIB interface has 16 external connections which are used for 3 separate types of functions. Inputs DI01 through DI08 (data input/output) are used specifically for transfer of data between GPIB devices.

Five other lines are used to manage the flow of information over the interface lines. The ATN (attention) level, when active, disables the current talker and listeners and makes all devices listen to the controller. IFC (interface clear) is used to put the interface system into a known quiescent state. The SRQ (service request) line is used to indicate to the controller that a device on the bus is in need of service and an interrupt is requested (the controller determines which devices may talk or listen at any time). The REN (remote enable) command selects either a remote or local source of device programming. The EOI (end or identify) line is used to signal the end of a multiple byte transfer and is used in conjunction with ATN to execute the parallel polling sequence.

The three remaining lines are associated with the handshake process and are the DAV (data valid), NRFD (not ready for data) and NDAC (data not accepted) lines. Their timing relationships during the handshake process are shown in Figure 2-50. Each data byte transferred by the interface system uses the handshake process to exchange data between source (typically a talker) and acceptor (typically a listener). The following list of events is related by number to the state changes shown in Figure 2-50 and the flow chart shown in Figure 2-51.

THE HANDSHAKE PROCESS

1. The source (talker) initializes the active LO DAV (data valid) to a HI level, indicating that data is not valid.

2. The acceptors (listeners) initialize the active LO NRFD (not ready for data) level to a LO (none are ready for data) and set the active LO NDAC (data not accepted) level to LO (none have accepted data).

3. The source checks for an error condition (both NRFD and NDAC at a HI level) and then sets a data byte on the DIO (data in/out) lines. After the data has been placed on the DIO lines, the source delays to allow the data to settle on these lines.

4. When the acceptors have all indicated readiness to accept the first data byte, the NRFD level goes HI.

5. The source, upon sensing the HI NRFD level, sets the DAV level to a LO, indicating that the data on the DIO lines has settled and is valid.

6. The first (fastest) acceptor sets the NRFD level LO, indicating that it is no longer ready for new data, and accepts the present data. The remaining acceptors follow at their own rates.

7. The first acceptor sets its NDAC level to a (passive) HI, indicating that is has accepted the data. (NDAC remains LO due to the other acceptors actively driving NDAC LO. The term "passive" means that if any other device is "actively" driving this line to the opposite state, the passive level is overridden.)

8. As the last (slowest) acceptor accepts the present data, the NDAC level goes to a (passive) HI, indicating that all acceptors have accepted the data.

9. The source, having sensed the HI NDAC level, sets DAV HI. This indicates to the acceptors that the data on the DIO lines must now be considered invalid.

10. The source may change the data on the DIO lines at this time and now delays to allow this data to settle if changed.

11. The acceptors, upon sensing the HI DAV level (step 9, above), set the NDAC level LO in preparation for the next cycle. The NDAC line goes LO when set by the first acceptor.

12. The first acceptor indicates that it is now ready for the next data byte by setting its NRFD level to a (passive) HI. (NRFD remains LO due to other acceptors actively driving it LO.)

13. When the last acceptor indicates that it is ready for the next data byte, the NRFD level goes (passive) HI.

14. The source, sensing that NRFD is HI, sets the DAV level LO, indicating that the new data on the DIO lines has settled and is valid.

15. The first acceptor sets the NRFD level LO, indicating that it is not ready to accept any change of data, then accepts the present data. The other acceptors follow at their own rates.

http://manoman.sqhill.com

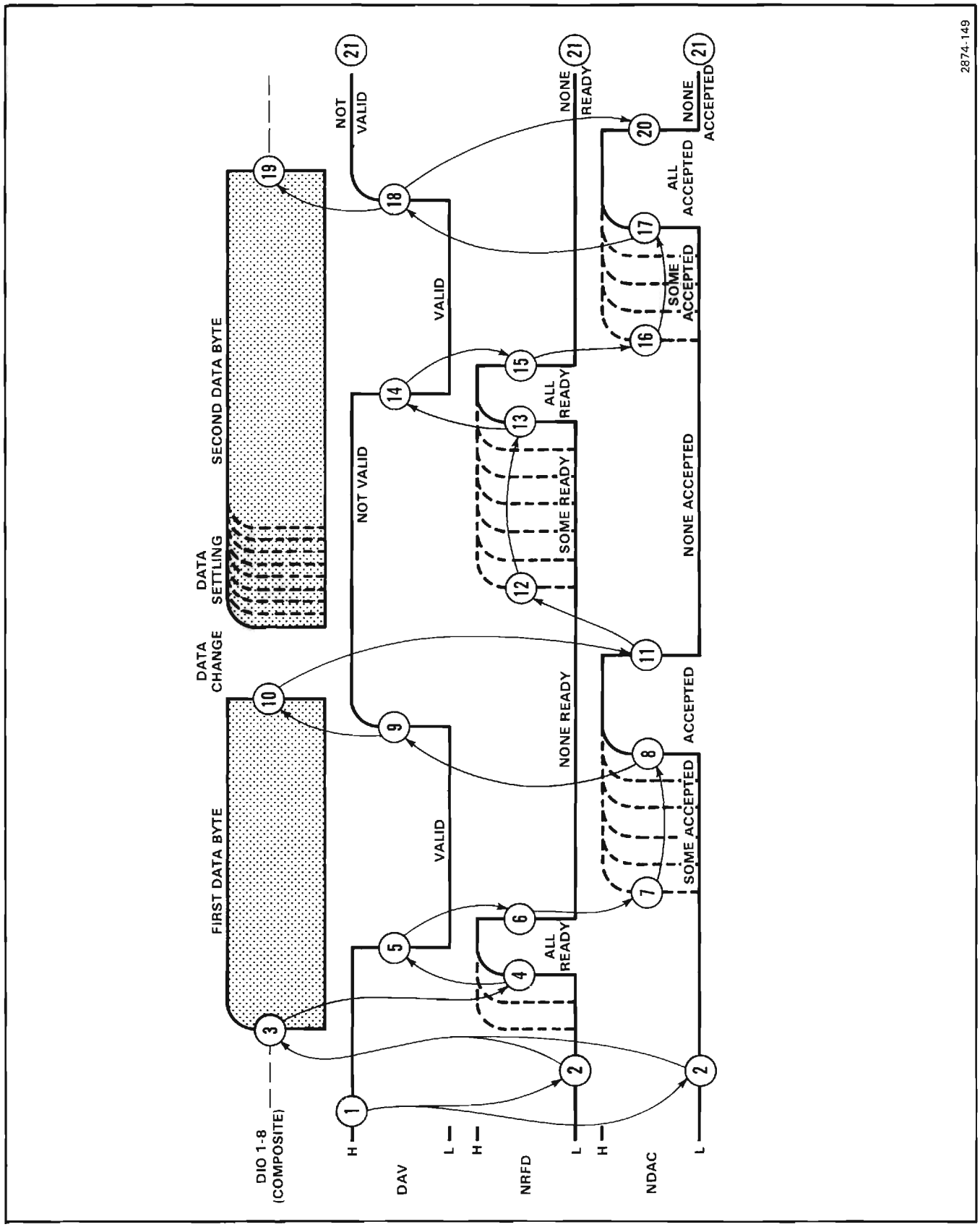

Figure 2-50. GPIB Three Wire Handshake state diagram.

http://manoman.sqhill.com

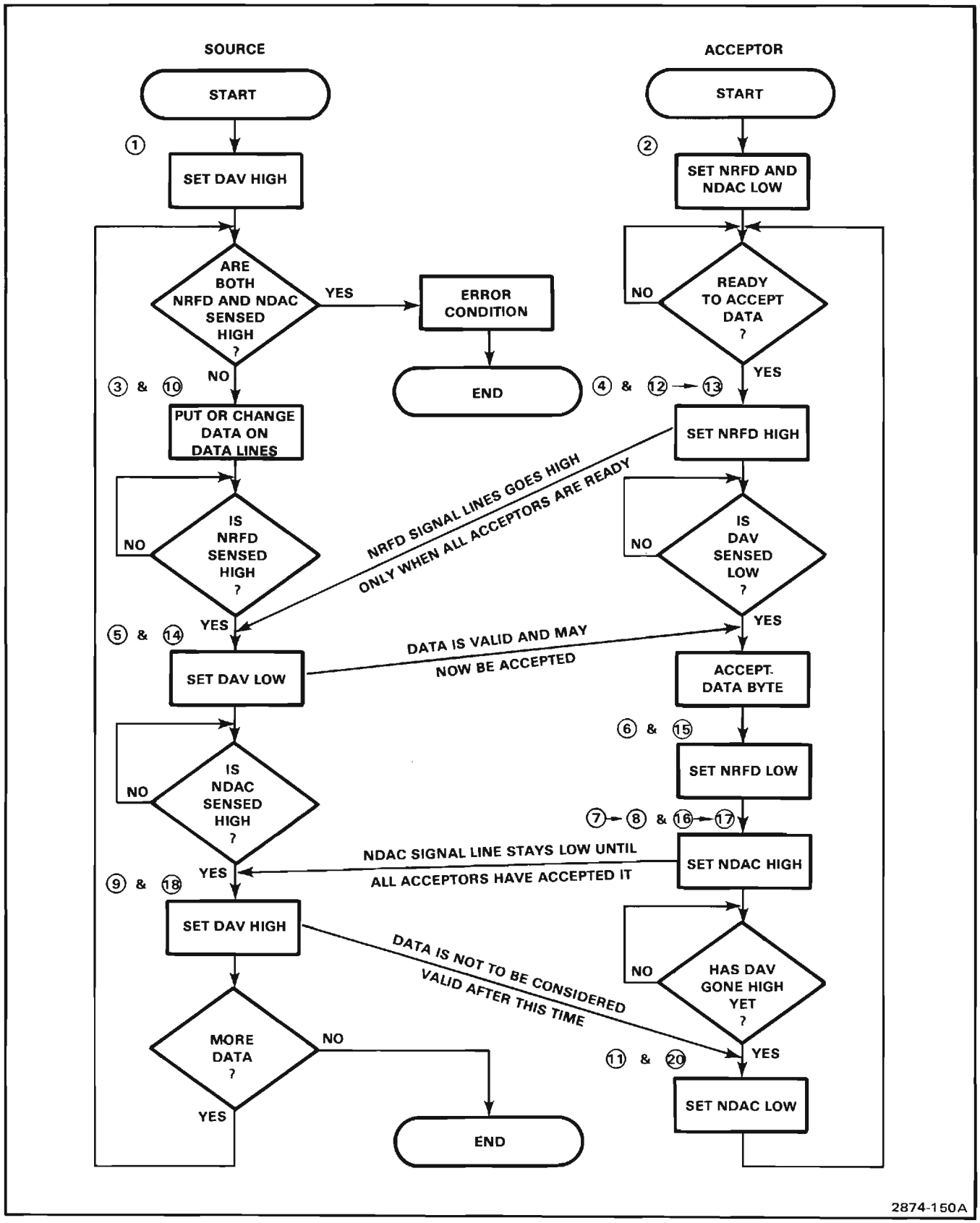

Figure 2-51. GPIB Handshake flowchart.

http://manoman.sqhill.com

16. The first acceptor sets its NDAC level to a (passive) HI, indicating that it has accepted the data (as in step 7 above).

17. The last acceptor sets the NDAC level (passive) HI, indicating that it has accepted the data (as in step 8 above).

18. The source, having sensed that NDAC is HI, sets DAV HI (as in 9).

19. The source removes the data byte from the DIO signal lines after setting DAV HI.

20. The acceptors, upon sensing the HI DAV level, set NDAC to a LO level in preparation for the next cycle.

21. Note that all three handshake lines are at their initial states (as in steps 1 and 2 above).

GPIA

The GPIA (general purpose interface adapter) consists of U220, a 40-pin IC specifically designed for GPIB applications. The purpose of the GPIA is to provide interface between the IEEE 488 Standard instrument bus and the microprocessor.

Sixteen of the pins of this IC are related directly to the 16 pins of the GPIB interface connector discussed in the IEEE 488-1978 Standard description above. One of these, the $\overline{EOI}$ is under the control of the T/$\overline{R}$ 1 (transmit/recieve) level. In addition, eight pins (D0-D7) are bi-directionally buffered to the Data Bus for transfer of data to and from the Data Bus.

The R/$\overline{W}$ (read/write) level, in conjuction with the three register select pins (RS0, RS1 and RS2) tied to the address bus of the microprocessor system, address one of 15 registers internal to the GPIA IC. These registers are used for data storage, status monitors and interrupt functions. The $\overline{ASE}$ (address switch enable) output is also addressed by these four lines and, when addressed, allows an external, user definable data byte (set by switches on the rear panel) to be placed on the Data Bus. This data byte represents the "address" of this instrument within a more complex GPIB system as addressed by the controller over the GPIB.

The $\overline{RESET}$ line is used to initialize the GPIA chip during the power up sequence. A LO $\overline{RESET}$ level is required to initialize the IC. The $\overline{CS}$ (chip select) input is used to select the GPIA. The $\overline{CS}$ must be LO to select the device. The IRQ (interrupt request) line is tied to the interrupt bus of the microprocessor and indicates, when LO, that the GPIA requires service by the microprocessor. The T/$\overline{R}$ 2 (transmit/receive) output provides selection of whether this instrument is transmitting or receiving data over the GPIB by controlling the bi-directional buffers to the GPIB. The Clock input for the GPIA stage is the Φ2 pin. The DMA (direct memory access) control pins and the trigger input pin are not used in this instrument. The remaining pins of the GPIA IC are power supply connections.

MPU INTERFACE

The MPU (microprocessor unit) interface stage consists of U330A, U330B, U430A and U430B. These ICs are tri-state buffers controlled by the Control and Timing Logic stage. When enabled, U430B and U330A buffer the eight most significant bits from the Data Bus to the GPIA. Data from the GPIA is buffered to the eight most significant bits of the data bus when U430A and U330B are enabled.

GPIB INTERFACE

The GPIB Interface stage conists of U110, U120, U130 and U310 which are bi-directional non-inverting buffering transceivers. The sixteen lines of the GPIB are connected (buffered) to the GPIA and vice-versa through these devices, providing current levels compatible with the IEEE 488-1978 standard. The transmit/receive outputs, T/$\overline{R}$ 1 and T/$\overline{R}$ 2, of the GPIA determine which of the GPIB lines are in the transmit or receive mode at any time.

CONTROL AND TIMING LOGIC

The Control and Timing Logic stage consists of U510, U520, U530, U610, U620, U630, Q700, Q701 and their associated components. It provides the necessary logic for interfacing microprocessor control and clock signals to the GPIA as well as providing additional logic for controlling Data Bus and GPIB interface functions.

The GPIA IC, U220, was designed to be used with a microprocessor other than the one used in this instrument, therefore some signal inconsistencies exist. One such case is in the characteristics of the clock required by U220 and that produced by the microprocessor clock. Integrated circuits U510C, U620A and U620B together create a free-running Φ2 clock pulse compatible with U220 that is asynchronous to the microprocessor clock. Shift register U520, in conjunction with U530B, U610A and U630F produce a similar clock synchronized to the system microprocessor. One or the other of these clocks is used, depending on microprocessor status.

In the initial stage (when the GPIB is not being used), the HI $\overline{GPIB}$ level applied to U530C generates a HI $\overline{GPIB\ DLY}$ level going to the microprocessor. This tells the microprocessor that it doesn't have to wait on the GPIB, and normal microprocessor operation continues.

http://manoman.sqhill.com

Since U220 is a state device, meaning that a clock is required for it to change states internally, a clock must be supplied to U220 so that it may perform its GPIB interface functions. This clock is developed from the 3-MHz Φ1 clock and may be either free-running or synchronized to the system microprocessor. The synchronized clock is developed by U520 while U620A and U620B develop the free-running clock which allows the GPIB circuit to monitor GPIB activity external to the instrument.

On power up, the $\overline{\text{RESET}}$ level momentarily goes LO to set the $\overline{Q}$ output of U610A HI (through U630B and U630F). Now, the first HI $\overline{\text{GPIB}}$ level applied to U510C through U630E results in a HI at U620A's J input. The Φ1 clock to U620A toggles its Q output, pin 12, at a 1.5-MHz rate. Since the $\overline{\text{GPIB}}$ level is HI at the J input of U620B, its Q output at pin 9 also toggles and a 750-kHz clock is developed. this is applied through U510D to the clock input of U220 pin 6. The HI $\overline{\text{GPIB}}$ level applied to U630E is inverted and disables the synchronized clock by holding U520 in its reset state.

If the GPIB is required to communicate with the microprocessor to do a memory cycle, a clock synchronized to the system microprocessor is required. This is done by using a shift register to synthesize a clock with the proper characteristics using the existing 3-MHz Φ1 clock. Figure 2-52 shows a timing diagram to further clarify the following description of the GPIB memory clock cycle.

When it is determined that the microprocessor needs to use the GPIB for a memory cycle, the free-running GPIB clock must be terminated in an orderly manner before the synchronized clock is started to insure that all data transfers are valid.

When the $\overline{\text{GPIB}}$ level goes LO, indicating the beginning of a GPIB cycle, a LO $\overline{\text{GPIB DLY}}$ is generated telling the microprocessor to wait while the clock source for U220 changes. Also at this time, the J input of U620B goes LO and the input at pin 9 of U510C goes HI. If the $\overline{Q}$ output of U620B is HI at this time, the output of U510C applied to the J input of U620A will go LO. If the Q output is LO, the next clock applied to U620B will toggle it HI and a LO results at the J input of U620A. In either case, the LO level at the J input of U620A inhibits any further clock pulse to U620B, thus stopping the free-running clock.

While the free-running clock was being used ($\overline{\text{GPIB}}$ HI), U520 was held in a reset condition (all outputs LO) by the LO level at the output of U630E. Now though, when the $\overline{\text{GPIB}}$ level goes LO, U520 is enabled and begins shifting the data level at its A input to its Q outputs with consecutive 3-MHz Φ1 clocks. After the $\overline{Q}$ output of U620B goes HI, indicating that the free-running clock is being turned off, a HI is clocked to U520's Q_A output on the rising edge of the next 3-MHz Φ1 clock. This is applied to the clock input of the flip-flop U610A.

Previously, when the $\overline{\text{GPIB}}$ level was HI, U610A was held in a set condition due to the LO applied to pin 10. Its Q output to the $\overline{\text{CS}}$ (chip select) input remained HI, disabling the GPIA chip. Now, when the $\overline{\text{GPIB}}$ level goes LO indicating a GPIB cycle, the level at U610B's set input goes HI, enabling the flip-flop. The pulse applied to U610B's clock input from the Q_A output of U520 clocks whatever logic level is present at U610B's D input to its Q output. A LO at the Q output of U610B applied to the $\overline{\text{CS}}$ input of U220 enables the GPIA chip.

Setting of the D input level to U610B (which eventually determines whether U220 is enabled) is accomplished by U510A, U510B and U630A. Some data registers within U220 are always cleared when read. Each address applied to the address pins of U220 actually addresses two registers, a read register and a write register. The microprocessor used in this instrument always reads an address before writing to it. Because of this, writing to a register may destroy data in the corresponding read register. This type of data loss is prevented by setting Address bit 5 (A5) applied to U510A HI. By doing this, a HI R/$\overline{W}$ (read) level will not enable U220 (through U510A and U510B) while a LO R/$\overline{W}$ (write) level will, preventing unwanted reads from occuring. A read from U220 by the microprocessor may only occur by setting A5 LO.

Since the $\overline{\text{RESET}}$ (system reset) level is HI and the Q_D output of U520 is LO, the output of U530B is LO and the HI reset level applied to U610A through U630F enables the flip-flop, U610. The next 3-MHz Φ1 clock to U520 shifts the HI Q_A output level to its Q_B output, clocking U610A's $\overline{Q}$ level LO (it was initially set HI by the system reset, $\overline{\text{RESET}}$, through U630B, U530B and U630F upon power up). This LO $\overline{Q}$ level applied to U510D produces the positive-synchronized Φ2 clock to U220. The HI level at the Q_B output of U520 is also applied to U530C through an rc delay network, removing the LO $\overline{\text{GPIB DLY}}$ signal to the microprocessor after about 70 ns. This indicates that the clock source for U220 has been switched from the free-running to the synchronized clock and that the remainder of the microprocessor cycle will be long enough to complete the GPIB cycle. The 3-MHz Φ1 clock to U520 continues to shift the HI bit to each of its outputs and when the HI is shifted to its Q_D output, U610A is reset through U530B and U630F, terminating the Φ2 clock to U220.

When the $\overline{\text{GPIB}}$ cycle is finished, GPIB returns HI, resetting U520 and U610B to their initial states and restarting the free-running clock. When U610B is set, U220 is disabled as $\overline{\text{CS}}$ goes HI.

http://manoman.sqhill.com

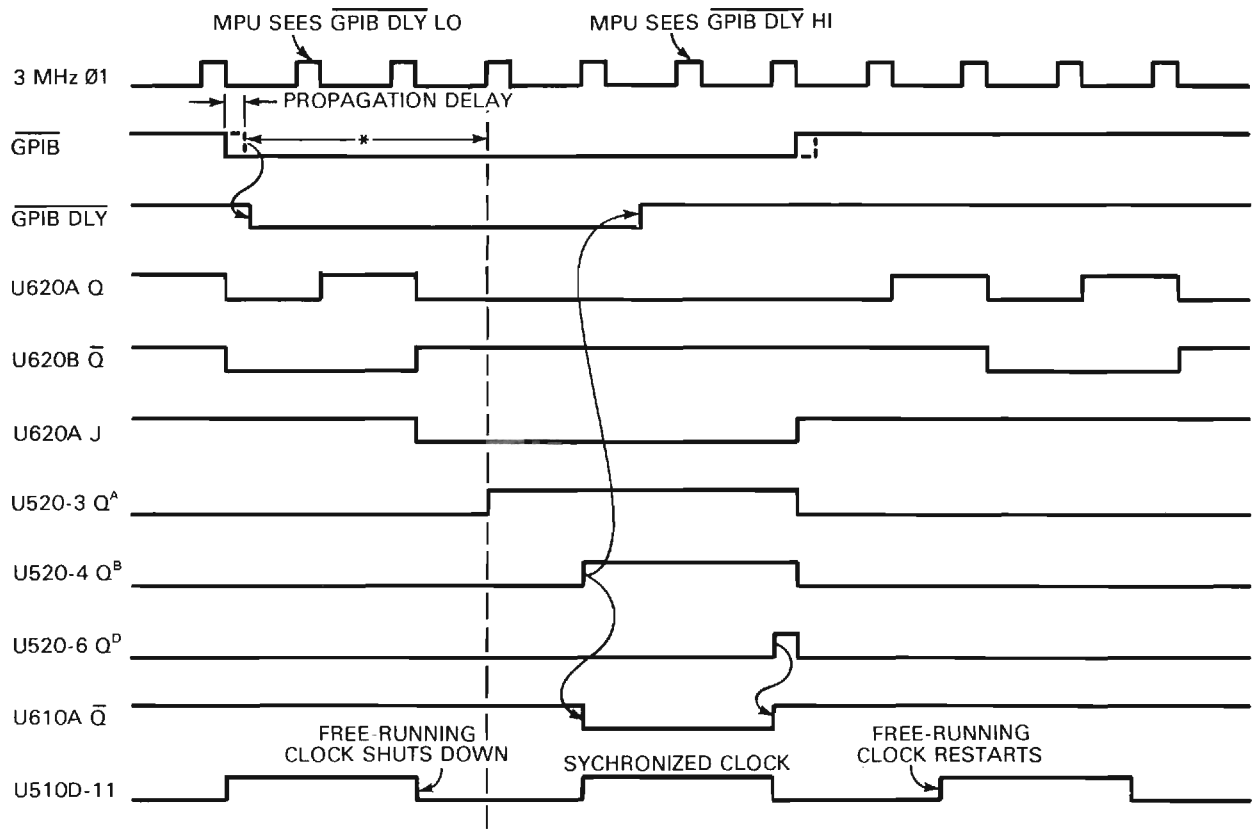

* Note: The time between the falling edge of $\overline{GPIB}$ and the rising edge of U520 pin 3 (the shift register Q^A output) may vary (and thus the overall length of the memory cycle) depending upon the state of U620A and U620B when the falling edge of $\overline{GPIB}$ occurs. The events shown after the rising edge of U520 pin 3 (Q^A) always have the time relationships shown.

2874-151A

Figure 2-52. GPIB timing diagram.

http://manoman.sqhill.com

Integrated circuits U530A, U530D and U630A provide control of the MPU Interface stage. When the $\overline{GPIB}$ level is LO and the R/$\overline{W}$ level is HI, indicating a read from GPIB cycle, U430A and U330B of the MPU Interface stage are enabled, buffering data from the GPIA stage onto the Data Bus. When both of these levels (R/$\overline{W}$ and $\overline{GPIB}$) are LO indicating a write to GPIB cycle, U330A and U430B are enabled, buffering the data on the Data Bus to the GPIA stage. If the $\overline{GPIB}$ level is HI (GPIB not in use), U330 and U430 are in a high impedance state, isolating the Data Bus from the GPIA stage.

Inverters U630C and U630D provide buffering and inversion of the T/$\overline{R}$ 2 (transmit/receive) level to provide enable levels for the GPIB interface stage. Transistors Q700 and Q701 allow the microprocessor to terminate a GPIB transmission by asserting a LO $\overline{GPIBEOI}$ (GPIB end or identify) level.

GPIB ADDRESS SELECTOR

The GPIB Address Selector stage consists of U410, R201, R202, R203, R204, R205, R301, R302, R303 and a multiple SPST switch on the rear panel. When the address to read register 4 is applied to pins 5, 37, 38 and 39 of U220, the $\overline{ASE}$ (address select enable) level applied to pins 1 and 19 of U410 goes LO, enabling the user definable "address" of this instrument (set by the multiple switch closures to ground on the rear panel) to be buffered onto the Data Bus. This is the user definable "address" of this instrument within a more complex GPIB system. The resistors mentioned are pull-up resistors.

is connected and the internal fuse, F12, is intact. It does not signify that the MEMORY BACK-UP POWER voltage is within the proper operating limits between +6.0 and +6.5 volts dc; merely that it is applied.

Switch S110 is an externally settable GPIB address selector. This instrument's GPIB address is set by either opening or closing the individual rocker switches within S110.

The STOP EXTERNAL WAVEFORM ACQUIRE switch, S15, is a pushbutton switch used to stop waveform acquisition when acquiring externally (see the Digitizer Sweep Counter discription). The AUDIBLE ERROR/WARNING switch S16 is used to either enable or disable the audible warning circuit.

Connector J15 is located on the rear panel. It provides a user programmable TTL output level (for simple on/off or similar control) to a peripheral device.

Connector J410 is a GPIB connector adhering to the IEEE 488-1978 GPIB Standard and provides for using the 7854 in GPIB configurations.

The cabling associated with P108 connects the MPU (microprocessor unit) to both the Front Panel Keyboard circuit and to the Rear Panel Connector board. Connector P208 is an RS-232 connector that connects the external Calculator Keyboard to the MPU board via the Rear Panel Connector Board and P108.



REAR PANEL CONNECTOR

The Rear Panel Connector circuit consists of S15, S16, S110, Q14, VR13, VR16, CR12, CR15, DS15 and their associated components. A schematic of this circuit is given on diagram 36 in Section 7, Diagrams and Circuit Board Illustrations.

Zener diode VR13, silicone-controlled rectifier Q14 and their associated components make up an overvoltage protection circuit for the Memory Back-Up Power Input. If the input voltage exceeds about +15 volts, the voltage applied to the gate of Q14 fires this SCR, sinking all current to ground. If this current exceeds 1.5 amperes, fuse F12 will blow and the overvoltage will be isolated from the RAM power line. LED DS15 illuminates to indicate to the user that the MEMORY BACK-UP POWER



MOTHER BOARD

The Mother Board circuit supplies the majority of interconnection between boards in the digital portion of this instrument. It is a multi-layered printed circuit board with 10 individual edge-card multi-pin connectors designed to accept the various microprocessor related boards using bus configurations. A schematic of the Mother Board circuit is given on diagram 37 in Section 7, Diagrams and Circuit Board Illustrations. This schematic shows all interconnecting signal lines on the Mother Board and the name of each. Table 2-8 gives a brief description of each signal and its function. Arrows on signal lines indicate signal origin, with an out-arrow indicating that the signal may be generated by the board assigned to that connector. As will be noted, many signals may be generated by more than one circuit.

http://manoman.sqhill.com

TABLE 2-8
Mother Board Signal Definitions

Signal Name	Definition
A1-A15	Address bus lines, 1 to 15.
ADDADV	Address Advance; from Display board to increment Address Generator by one.
$\overline{\text{ADDBUFF}}$	Address Buffer control; from Display board.
$\overline{\text{ADXD}}$	Address X Display; firmware address E012.
$\overline{\text{ADYD}}$	Address Y Display; firmware address E014.
AHO	A Hold Off; from A time base to Control Logic.
$\overline{\text{AMDWRD}}$	Acquire Mode Word; firmware address E00A.
$\overline{\text{AQSTOP}}$	Acquire Stop; rear-panel push button closure to ground to end external acquire.
ASWPG	A Sweep Gate; from Main Interface.
AUDIO	MPU flag bit to front panel for control of the audio speaker.
AUXGATEB	Auxiliary Gate B; from B plug-in (7B87 clock).
$\overline{\text{AWRD}}$	A Word; read or write to A Word; firmware address E002.
AWRDLSB	A Word LSB; inversion of A word lsb from Display system to Control Logic.
BAT	Battery; back-up power for RAM.
$\overline{\text{BGDIG}}$	Bus Grant to Digitizer; from DMA Control Logic circuitry.
$\overline{\text{BGDSY}}$	Bus Grant to Display; from DMA Control Logic circuitry.
$\overline{\text{BGRO}}$	Bus Grant to Readout; from DMA Control Logic circuitry.
BHO	B Hold Off; from B time-base to Control Logic.
$\overline{\text{BRDSY}}$	Display Bus Request; from Display to Control Logic DMA circuitry.
$\overline{\text{BRRO}}$	Readout Bus Request; from Readout acquisition to DMA Control Logic circuitry.

Signal Name	Definition
BSWPG	B Sweep Gate; from B time-base to Control Logic.
$\overline{\text{BWRD}}$	B Word; from MPU to Control Logic; firmware address E004. This is a write only address
BWRDSEL	B Word Select; control signal from Display system to Control Logic.
CHR/$\overline{\text{WFM}}$	Character or Waveform select; from Display system to Z-Axis for autofocus circuit.
$\overline{\text{CLSAR}}$	Clear Successive Approximation Register; signal from Control Logic to clear successive approximation register.
D0-D15	Data bus lines, 0 to 15.
DELAYGATEB	Delay Gate B; from B plug-in pin B9 to Control Logic where it's called STPTRG.
$\overline{\text{DMAREQ}}$	Direct Memory Access Request; from Control Logic to MPU.
$\overline{\text{DMDWRD}}$	Display Mode Word; from MPU to Control Logic and Display system; firmware address E000.
$\overline{\text{DMEM}}$	Delayed Memory Enable; from Control Logic to Digitizer.
DSAR	Data from Successive Approximation Register; data out in serial form.
DSPRT	Display Real Time; from Control Logic to front-panel mode switch.
DTCSC	Dual Trace Channel Switch Control; used in Digitizer to control two waveform acquire.
$\overline{\text{ERO}}$	End Readout; control signal from Display system.
ESAR	End of Successive Approximation Register digitizing cycle; from Digitizer to Control Logic.
EXTSIG	External Signal; from MPU to rear panel.
$\overline{\text{FPR}}$	Front Panel Read; from MPU to front-panel mode switch; firmware address E010.

http://manoman.sqhill.com

TABLE 2-8 (CONT)
Mother Board Signal Definitions

Signal Name	Definition
$\overline{\text{FPW}}$	Front Panel Write; from MPU to front-panel mode switch; firmware address E010.
$\overline{\text{GPIB}}$	GPIB control signal; from MPU to GPIB; firmware addresses from E040 to E060.
$\overline{\text{GPIBDLY}}$	GPIB Delay; control signal from GPIB to MPU to extend memory cycle.
$\overline{\text{GPIBEOI}}$	GPIB End or Identify; CRU flag line from MPU to GPIB providing firmware control to set and remove EOI.
GND	Ground.
GNDA	Ground analog; for analog signals only.
GSF	Good Signal Flip-Flop; signal from Z-Axis to Control Logic indicating sweep is present.
HA	A Horizontal; readout inhibit from front-panel mode switch to readout acquisition portion of Display board.
HB	B Horizontal; readout inhibit from front-panel mode switch to readout portion of Display board.
HOLDA	Hold Acknowledge; MPU grants busses to DMA Control Logic circuitry.
HSTB	Horizontal Strobe; from sampler to Control Logic.
H/V$\overline{\text{Q}}$	Horizontal/Vertical $\overline{\text{Q}}$; from Control Logic to Digitizer.
H/VQ	Horizontal/Vertical Q; from Control Logic to Digitizer.
$\overline{\text{IACQ}}$	Acquire Interrupt; from Control Logic to MPU to indicate the appropriate number of sweeps has occured.
$\overline{\text{IDSY}}$	Display Interrupt; from Control Logic to MPU indicating Display is finished.
$\overline{\text{IGPIB}}$	GPIB Interrupt; from GPIB to MPU.
J1A35	Readout acquisition, Left Vertical, force readout.
J1A37	Readout acquisition, Left Vertical, Channel 1 column analog data.

Signal Name	Definitions
J1A38	Readout acquisition, Left Vertical, Channel 2 column analog data.
J1B37	Readout acquisition, Left Vertical, Channel 1 row analog data.
J1B38	Readout acquisition, Left Vertical, Channel 2 row analog data.
J2A35	Readout acquisition, Right Vertical, force readout.
J2A37	Readout acquisition, Right Vertical, Channel 1 column analog data.
J2A38	Readout acquisition, Right Vertical, Channel 2 column analog data.
J2B37	Readout acquisition, Right Vertical, Channel 1 row analog data.
J2B38	Readout acquisition, Right Vertical, Channel 2 row analog data.
J3A35	Readout acquisition, A Horizontal, force readout.
J3A37	Readout acquisition, A Horizontal, Channel 1 column analog data.
J3A38	Readout acquisition, A Horizontal, Channel 2 column analog data.
J3B37	Readout acquisition, A Horizontal, Channel 1 row analog data.
J3B38	Readout acquisition, A Horizontal, Channel 2 row analog data.
J4A35	Readout acquisition, B Horizontal, force readout.
J4A37	Readout acquisition, B Horizontal, Channel 1 column analog data.
J4A38	Readout acquisition, B Horizontal, Channel 2 column analog data.
J4B37	Readout acquisition, B Horizontal, Channel 1 row analog data.
J4B38	Readout acquisition, B Horizontal, Channel 2 row analog data.
$\overline{\text{MEM}}$	Memory enable; control signal from MPU to entire system.

http://manoman.sqhill.com

TABLE 2-8 (CONT)
Mother Board Signal Definitions

Signal Name	Definition
PUP	Power Up; signal from power supply.
$\overline{\text{RBR}}$	Remove Bus Request; from DMA Control Logic circuitry to DMA devices.
$\overline{\text{RDSY}}$	Reset Display Interrupt; from MPU to Control Logic.
$\overline{\text{RESET}}$	System Reset.
$\overline{\text{RNSAR}}$	Run Successive Approximation Register; from Digitizer to Control Logic.
ROACQEN	Readout Acquire Enable; from MPU to Display system to enable the DMA readout acquire circuitry.
ROINT	Readout Intensity; from front panel READOUT INTENSITY control to Display board. (Character intensity only).
ROM	Read Only Memory; address decoded output from the MPU board.
$\overline{\text{ROMDLY}}$	Rom Delay; control signal from ROM to MPU to extend memory cycle.
$\overline{\text{ROOFF}}$	Readout Off; front-panel switch (closure to ground or open) to Display board.
ROZAXIS	Readout Z-axis; Z-axis intensity current drive from Z-Axis board to Display board.
$\overline{\text{RTMZOFF}}$	Real Time Z-axis Off; from Display system to Main Interface to turn off real time analog Z-axis drive.
R/$\overline{\text{W}}$	Read/Write; control signal; bus line.
SPARE	Unused connector pins.
$\overline{\text{STADSY}}$	Start Display; from MPU to Control Logic.
$\overline{\text{STPDSY}}$	Stop Display; from MPU to Control Logic.
TS1-TS10	Time slot lines; 1 to 10.
VL	Left Vertical readout inhibit.
VR	Right Vertical readout inhibit.

Signal Name	Definition
$\overline{\text{VSTB}}$	Vertical Strobe; from Digitizer to sampler.
WAIT	μP Waiting; from MPU to GPIB and ROM to signal memory cycle is being extended.
$\overline{\text{WE}}$	Write Enable; control signal from MPU to system; bus line.
WFMINT	Waveform Intensity; from Display board to Z-axis to control stored waveform intensity.
WFMLT	Waveform Light; from MPU to front panel indicating stored waveform is being displayed.
XYINH	X-Y Inhibit; from Display board to Main Interface to allow Display system to drive X and Y axis of crt.
$\overline{\text{XYON}}$	X and Y axis On; from Control Logic to Horizontal and Vertical Channel Switches to control real time display.
XYON	Same as XYON, but levels are inverted.
50Hz	Real Time clock; from display system to MPU
3MHzΦ1	Φ1 clock; from MPU to Control Logic, GPIB and Display system.
3MHzΦ3	Φ3 clock; from MPU to Control Logic
3MHzΦ4	Φ4 clock; from MPU to Control Logic.
10MHzΦ1	Digitizer clock, delayed; from Control Logic to Digitizer.
10MHzΦ2	Digitizer clock, regular; from Control Logic to Digitizer.
+15V	+15 Volt power; analog supply.
+12VD	+12 Volt power; digital supply.
+5V	+5 Volt power; analog supply.
+5VD	+5 Volt power; digital supply.
+5VDS	+5 Volt Sense; sense line back to Auxiliary Regulator.
-5VC	-5 Volt power; cleaned supply for analog only.

http://manoman.sghill.com

TABLE 2-8 (CONT)
Mother Board Signal Definitions

Signal Name	Definition
-5VD	-5 Volt power; digital supply.
+5VDS	+5 Volt Sense; sense line back to Auxilary Regulator.
-15V	-15 Volt power; analog supply.
-15VC	-15 Volt reference; from Main Interface to Control Logic, Digitizer, and Display system for reference.
50Hz	Real Time clock; from Display system to MPU.



AUXILIARY REGULATOR

The Auxiliary Regulator converts existing supply voltages to the voltages required for proper operation of the microprocessor and its related digital circuitry. A schematic diagram of the Auxiliary Regulator is given on diagram 38, in Section 7, Diagrams and Circuit Board Illustrations. The schematic is divided by gray shaded lines separating the circuitry into major stages. Sub-headings in the following discussion use these stage names to aid in locating and identifying the components and portions of circuitry described.

+12 VOLT REGULATOR

The +12 Volt Regulator stage consists primarily of U40. It is a 3 terminal device that drops the +17 volt supply to a regulated +12 volts.

+5 VOLT REGULATOR

The +5 Volt Regulator consists of U10A, U10B, Q13, Q14, Q15 and their associated components. The voltage divider formed by R4 and R3 is referenced to the regulated +5 volt supply through CR4 and CR3. The ratio of R4 and R3 sets the reference voltage at pin 2 of U10A to +5 volts. The series regulator transistor, Q15, is driven by the emitter followers Q13 and Q14. The output of U10B is normally about +13 volts. Integrated circuit U10A sinks current through CR11 in varying amounts, depending on the voltage sensed at the output through R31, to provide only enough drive current to the base of Q13 to maintain a +5 volt output at the emitter of Q15. Should excessive current be drawn through current sense resistors, R26 and R27, the output of U10B will go negative, reducing current drive to Q13. This drastically reduces output current at the emitter of Q15, providing current foldback protection, in case a short circuit on the supply line should occur.

-5 VOLT SWITCHING SUPPLY

The -5 Volt Switching Supply is derived from the -17 volt unregulated supply. The voltage divider formed by R72 and R71 provides the reference voltage for the supply (about -5.1 volts) at the base of Q76. Current flowing through Q76 flows through R79 to turn on Q79. Current flows from a 0 volt potential if the supply has not been turned on previously, or from a -5 volt potential if it has been running, from the stored charge in C68 through T66 and Q79 to turn on the switching transistor, Q66. This charges the filtering capacitors C68, C84, C91 and C92 more negative through the series inductors T66, L68 and L84. At the same time, the base of Q76 is pulled more negative, due to the charge transfer through R74 and C74. This serves to reinforce this transition, turning on Q66 harder. Also, at this time, the voltage at the base of Q77 is going negative, as C68 charges through T66. When this charging voltage reaches a condition where the base of Q77 is more negative than the base of Q76, Q76 is turned off. This turns Q79 and Q66 off. Current still flowing through T66 is returned to ground through CR66 and L66. The primary function of the etched circuit board inductor L66, is to prevent reverse recovery transients of CR66 from affecting the ground potential. As the voltage at the base of Q77 goes more positive due to the filter capacitors discharging through the load, a point is reached where the base of Q76 is once more positive with respect to the base of Q77. This once more turns on Q76, Q79 and Q66, and the cycle repeats itself.

http://manoman.sqhill.com

EXCESSIVE CURRENT STOP

The Excessive Current Stop stage turns the -5 volts switching supply off should excessive current be drawn through the circuit.

The output of U86A and thus of U86B is normally about -13 volts, reverse biasing CR96. If excessive current is drawn through the circuit, the dc component of the voltage across L84 becomes large. This voltage is low-pass filtered by R81, R82 and C86 and increases until it is sufficient to drive the output of U86A positive. This transistion drives the output of U86B positive, forward biasing CR96. This turns off Q76, Q79 and Q66, turning off this supply until the output of U86B goes negative again. Components C95 and R95 provide a positive feedback path for the positive transition, latching the output of U86B positive until approximately 1 second after the output of U86A has gone negative. This time is determined by the discharge rate of C95 through R95 and R88. During this time the supply remains off.

FAULT PROTECTION

The Fault Protection circuit consists primarily of VR55 and Q58. It provides protection of the load if an excessive voltage condition should exist in the -5 volt supply. Under a light load condition (<100 mA), the regulation is not as effective and -5 volt supply output may tend more negative. When this happens, VR55 will begin to conduct, turning on Q58, which forces the output of U86B positive, turning off the supply. The load is also protected in case the -5 volt switching regulator should fail. If, for instance, the switching transistor, Q66, should short from emitter to collector, the output voltage will rapidly approach -17 volts. If this happens, the cathode of VR55 will go negative enough to forward bias CR96, putting an error signal on the fault sense line. This immediately turns off all supplies, including the unregulated -17 volts, until the fault is corrected.

http://manoman.sqhill.com

MAINTENANCE

This section contains information for performing preventive maintenance, troubleshooting, and corrective maintenance for the 7854 Oscilloscope Mainframe.

PREVENTIVE MAINTENANCE

Preventive maintenance, when performed on a regular basis, can often forestall instrument breakdown and may improve instrument reliability. The severity of the environment to which the instrument is subjected will determine the frequency of maintenance. A convenient time to perform preventive maintenance is preceding electrical adjustment of the instrument.

CABINET PANEL REMOVAL

WARNING

Dangerous potentials exist at several points throughout this instrument. When the instrument is operated with the covers removed, do not touch exposed connections or components. Some transistors have voltages present on their cases. Disconnect power before cleaning the instrument or replacing parts.

The side, top, and bottom cabinet panels provide protection to personnel from operating potentials present within the instrument. In addition, they reduce radiation of electromagnetic interference from the instrument. The cabinet panels are held in place by slotted fasteners. To remove the panels, turn each fastener counterclockwise a quarter turn with a large screwdriver. Lift the panels away. Operate the instrument with the panels in place to protect the interior from dust.

CLEANING

The 7854 should be cleaned as often as operating conditions require. Accumulation of dirt in the instrument can cause overheating and component breakdown. Dirt on components acts as an insulating blanket and prevents efficient heat dissipation. It also provides an electrical conduction path which may result in instrument failure. The side panels reduce the amount of dust reaching the interior of the instrument. Operation without the panels in place necessitates more frequent cleaning.

CAUTION

Avoid the use of chemical cleaning agents which might damage the plastics used in this instrument. Exercise care when cleaning Hypcon connectors; see cleaning instructions under Hypcon Connectors in this section. Use a nonresidue type of cleaner, preferably isopropyl alcohol, totally denatured ethyl alcohol, or a Freon TF cleaner such as Spray-On #2002. Before using any other type of cleaner, consult your Tektronix Service Center or representative.

EXTERIOR

Loose dust accumulated on the outside of the instrument can be removed with a soft cloth or small brush. The brush is particularly useful for dislodging dirt on and around the front-panel controls. Dirt which remains can be removed with a soft cloth dampened in a mild solution of detergent and water. Abrasive cleaners should not be used.

CRT

Clean the plastic light filter, implosion shield, and the crt faceplate with a soft, lint-free cloth dampened with denatured alcohol.

The crt mesh filter (furnished with Option 3 only) can be cleaned as follows:

1. Hold the mesh filter in a vertical position and brush lightly with a soft, No. 7 water color brush to remove light coatings of dust or lint.

http://manoman.sqhill.com

2. Greasy residues, or dried-on dirt, can be removed with a solution of warm water and a neutral-pH liquid detergent. Use the brush to lightly scrub the filter.

3. Rinse the filter thoroughly in clean water and allow to air dry.

4. If any lint or dirt remains, use clean low-pressure air to remove it. Do not use tweezers or other hard cleaning tools on the filter, as the special finish may be damaged.

5. When not in use, store the mesh filter in a lint-free dust-proof container, such as a plastic bag.

INTERIOR

Cleaning the interior of the instrument should only be occasionally necessary. The best way to clean the interior is to blow off the accumulated dust with dry, low-velocity air (approximately 5 lb/in^2.) Remove any dirt which remains with a soft brush or a cloth dampened with a mild solution of detergent and water. A cotton-tipped applicator is useful for cleaning in narrow spaces, or for cleaning more delicate circuit components.

CAUTION

Circuit boards and components must be dry before applying power to prevent damage from electrical arcing.

The high-voltage circuits should receive special attention. Excessive dirt in this area may cause high-voltage arcing and result in improper instrument operation.

VISUAL INSPECTION

The 7854 should be inspected occasionally for such defects as broken connections, improperly seated semiconductors, damaged or improperly installed circuit boards, and heat-damaged parts. The corrective procedure for most visible defects is obvious; however, particular care must be taken if heat-damaged parts are found. Overheating usually indicates other trouble in the instrument; therefore, correcting the cause of overheating is important to prevent recurrence of the damage.

SEMICONDUCTOR CHECKS

Periodic checks of semiconductors are not recommended. The best check of semiconductor performance is actual operation in the instrument. More details on semiconductors are given under Troubleshooting later in this section.

PERIODIC ELECTRICAL ADJUSTMENT

To ensure accurate measurements, check the electrical adjustment of this instrument after each 1000 hours of operation, or every six months if used infrequently. In addition, replacement of components may necessitate adjustment of the affected circuits. Complete adjustment instructions are given in Section 4, Performance Check and Adjustment. This procedure can be helpful in localizing certain troubles in the instrument, and in some cases, may correct them.

TROUBLESHOOTING

The following information is provided to facilitate troubleshooting the 7854 Oscilloscope mainframe. Analog and Digitial Troubleshooting Techniques are covered separately, with detailed analog troubleshooting information covered in this manual and detailed digital troubleshooting information included with the specialized digital diagnostic equipment recommended in Digital Troubleshooting Equipment list. Tektronix, Inc. recommends either this diagnostic equipment be purchased or digital failures be referred to the local Tektronix, Inc. Service Center.

The following data in conjunction with information in other sections of this manual will aid in isolating and repairing a defective component or assembly. A good understanding of circuit operation is an invaluable troubleshooting tool. Refer to Section 2, Theory of Operation.

TROUBLESHOOTING AIDS

DIAGRAMS

Complete schematic diagrams are given on the pullout pages in Section 7, Diagrams and Circuit Board Illustrations. The component circuit number and electrical value of each component in this instrument are shown on these diagrams. (See the first page of the Diagrams and Circuit Board Illustrations section for definitions of the reference designators and symbols used to identify components in this instrument.) Important voltages and numbered waveform test points are also shown on the diagrams. Important waveforms, and the numbered test points where they were obtained, are located adjacent to or preceding each diagram. The portions of circuits mounted on circuit boards are enclosed with heavy, solid-black lines.

http://manoman.sqhill.com

CIRCUIT BOARD ILLUSTRATIONS

To aid in locating circuit boards, an illustration showing the circuit board location appears on the back of the foldout page immediately preceding the schematic diagram. An illustration of the circuit board(s) is also included here to identify the physical location of components and waveform test points that appear on the respective schematic diagram. Each circuit board illustration is arranged in a grid with a locator index to facilitate rapid location of components contained in the corresponding schematic diagram.

SERVICE IDENTIFICATION TAG

A service identification tag (applicable only to the digital portion of the 7854) is affixed to the rear-panel (See Fig. 3-13 later in this section) to inform service personnel of of the applicable version of diagnostic firmware, 067-0961-XX, and signature table, 070-2972-00.

A new Service Identification Tag is issued each time it is determined that the installation of a particular field modification will affect the diagnostic firmware and/or related signature tables.

Parts Notice

When modifications are ordered, a Parts Notice is issued stating the revision of Diagnostic Firmware and Signature tables required. It also lists other modifications, if any, that are required in addition to the one being ordered to support the firmware and signature tables. No signature tables will be provided with field modifications.

TROUBLESHOOTING CHART

A troubleshooting chart is provided in Section 7, Diagrams and Circuit Board Illustrations to aid in locating a defective circuit. The shaded blocks on the Troubleshooting Chart indicate circuit(s) that may cause the indicated malfunction. The circuits listed are discussed in detail in Section 2, Theory of Operation.

TROUBLESHOOTING TREE

Digital troubleshooting trees are provided in the 067-0911-00 service manual to aid in locating a defective circuit in the digital portion of the 7854.

The Troubleshooting Tree directs the technician to the applicable signature table and provides specific instrument-under-test set-up conditions.

ADJUSTMENT AND TEST POINT LOCATIONS

To aid in locating test points and adjustable components called out in the various sections of the Performance Check and Adjustment procedure, Adjustment and Test Point Locations foldout pages are provided in Section 7, Diagrams and Circuit Board Illustrations.

COMPONENT COLOR CODING

The instrument contains brown composition resistors, some metal-film resistors, and some wire-wound resistors. The resistance values of wire-wound resistors are usually printed on the component body. The resistance values of composition resistors and metal-film resistors are color coded on the components using the EIA color code (some metal-film resistors may have the value printed on the body). The color code is read starting with the stripe nearest the end of the resistor. Composition resistors have four stripes, which consist of two significant figures, a multiplier, and a tolerance value (see Fig. 3-1). Metal-film resistors have five stripes consisting of three significant figures, a multiplier, and a tolerance value.

The values of common disc capacitors and small electrolytics are marked on the side of the component body. The white ceramic and epoxy-coated tantalum capacitors used in the instrument are color coded using a modified EIA code (see Fig. 3-1).

The cathode end of glass-encased diodes is indicated by a stripe, a series of stripes, or a dot. The cathode and anode ends of metal-encased diodes can be identified by the diode symbol marked on the body.

SEMICONDUCTOR LEAD CONFIGURATIONS

Lead configurations for semiconductor devices used in the 7854 Oscilloscope are shown in Figure 3-2.

MULTI-PIN CONNECTORS

Pin 1 on multi-pin connectors is designated with a triangle. A triangle, dot or square printed on circuit boards denotes pin 1. When a connection is made to a circuit board, the orientation of the triangle on the multi-pin holder is determined by the index (triangle, dot or square) printed on the circuit board (see Fig. 3-3). Some multi-pin connectors are keyed with a plastic pin that protrudes through a hole on the circuit board. Proper mating with the multi-pin connector and the pin(s) on the circuit board cannot be accomplished unless this pin is aligned with the hole on the circuit board.

Some multi-pin connectors are equipped with a locking mechanism to more readily secure the connector to the circuit board. To remove these connectors, grasp the connector body and pull perpendicular to the circuit board. These connectors should not be removed by pulling on the wire leads; this causes the locking mechanism to clamp onto the circuit board pins.

ANALOG TROUBLESHOOTING EQUIPMENT

The following equipment is useful for troubleshooting the analog circuitry of the 7854 Oscilloscope mainframe:

1. Analog Test Board (067-0912-00)

The 7854 Analog Test Board (067-0912-00) is used to isolate the analog circuitry from the digital portion of the 7854 Oscilloscope for testing, calibrating or troubleshooting. The Analog Test Board consists of a single circuit board and a ten-conductor ribbon cable with connectors at either end.

http://manoman.sqhill.com

COLOR CODE

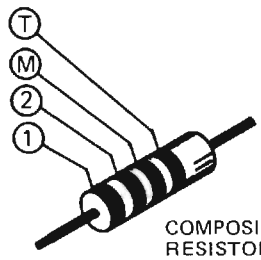

COMPOSITION RESISTORS

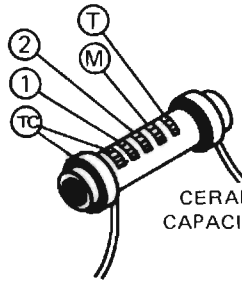

CERAMIC CAPACITORS

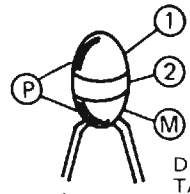

DIPPED TANTALUM ELECTROLYTICS

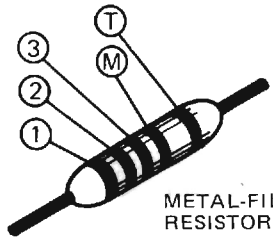

METAL-FILM RESISTORS

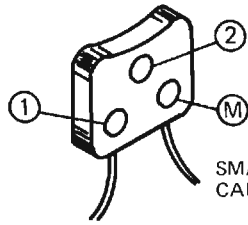

SMALL DISC CAPACITORS

(1) (2) and (3) - 1ST, 2ND, AND 3RD SIGNIFICANT FIGS. (T) AND/OR (TC) COLOR CODE MAY NOT BE PRESENT ON SOME CAPACITORS;

(M) - MULTIPLIER (T) - TOLERANCE;

(TC) - TEMPERATURE COEFFICIENT.

(P) - POLARITY AND VOLTAGE RATING

COLOR	SIGNIFICANT FIGURES	RESISTORS		CAPACITORS			DIPPED TANTALUM VOLTAGE RATING
		MULTIPLIER (OHMS)	TOLERANCE	MULTIPLIER (pF)	TOLERANCE		
					OVER 10pF	UNDER 10pF	
BLACK	0	1	---	1	±20%	± 2pF	4VDC
BROWN	1	10	±1%	10	±1%	±0.1pF	6VDC
RED	2	10^2 or 100	±2%	10^2or 100	±2%	---	10VDC
ORANGE	3	10^3or 1 K	±3%	10^3 or 1000	±3%	---	15VDC
YELLOW	4	10^4 or 10K	±4%	10^4 or 10,000	+100% −0%	---	20VDC
GREEN	5	10^5 or 100 K	±1/2%	10^5or 100,000	±5%	±0.5pF	25VDC
BLUE	6	10^6 or 1 M	±1/4%	10^6 or 1,000,000	---	---	35VDC
VIOLET	7	---	±1/10%	10^7 or 10,000,000	---	---	50VDC
GRAY	8	---	---	10^{-2} or 0.01	+80% −20%	±0.25pF	---
WHITE	9	---	---	10^{-1} or 0.1	±10%	±1pF	3VDC
GOLD	---	10^{-1} or 0.1	±5%	---	---	---	---
SILVER	---	10^{-2} or 0.01	±10%	---	---	---	---
NONE	---	---	±20%	---	±10%	±1pF	---

C1862-74

Figure 3-1. Color code for resistors and capacitors.

http://manoman.sqhill.com

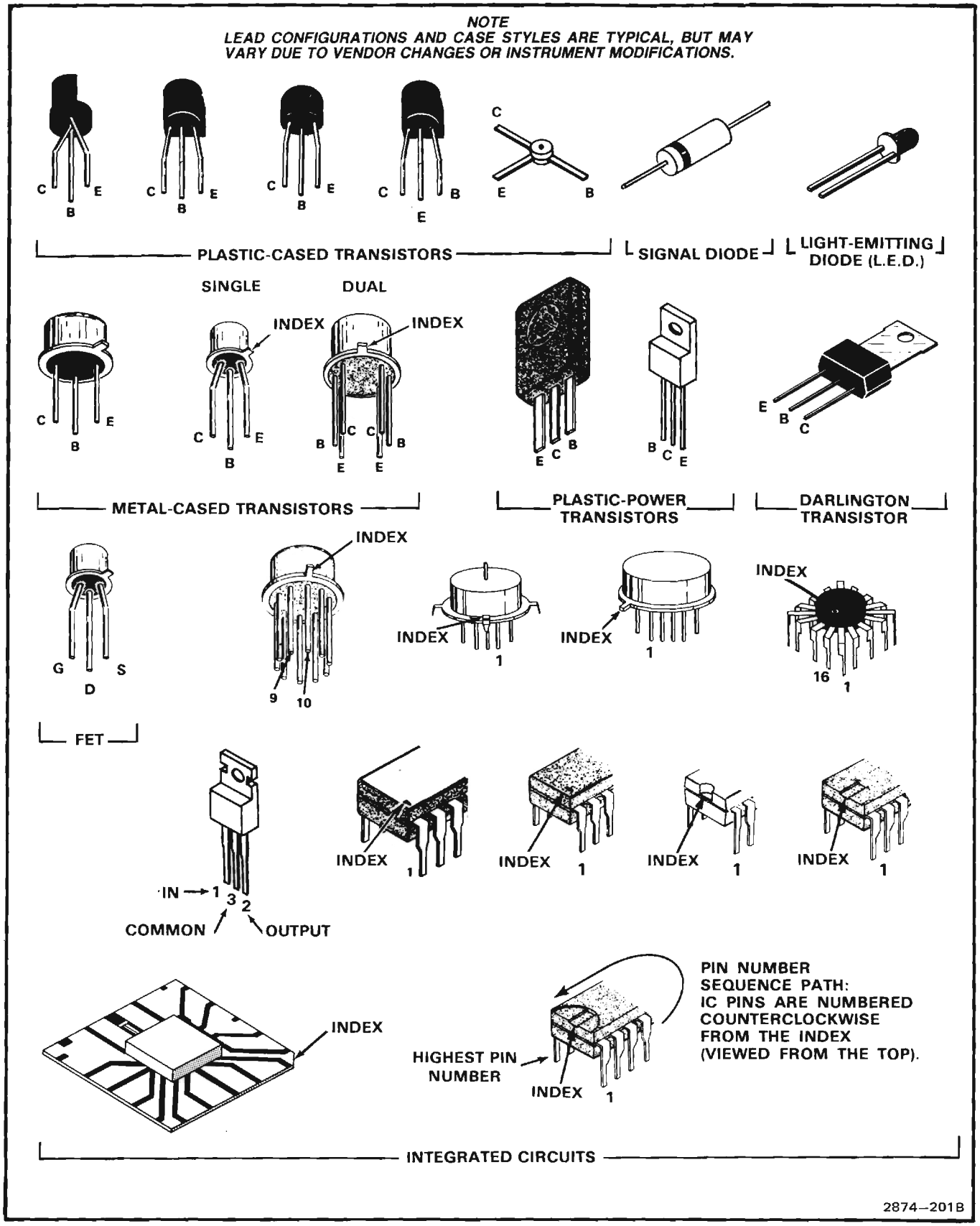

Figure 3-2. Semiconductor lead configurations.

http://manoman.sqhill.com

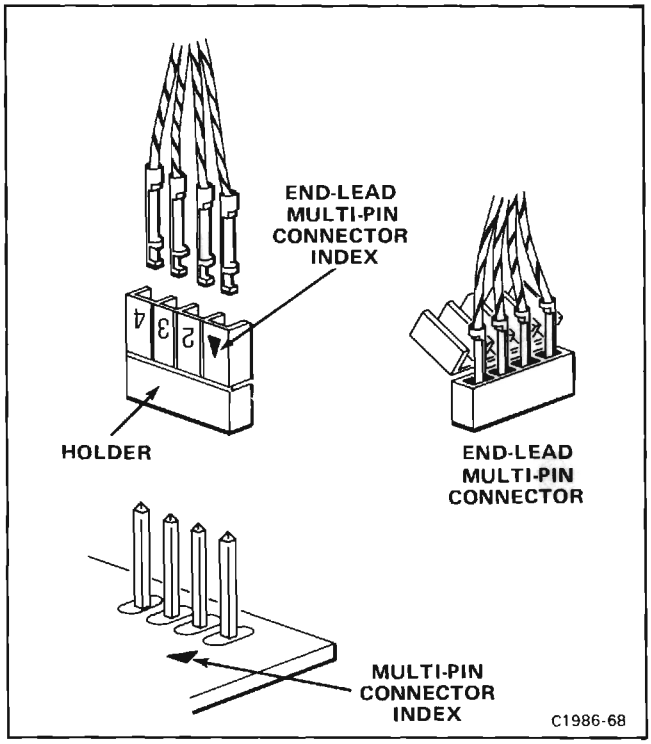

Figure 3-3. Orientation of multi-pin connector holders.

The Analog Test Board plugs into the A29-Display board slots, P109 and P110, of the 7854 digital backplane. The ten-conductor ribbon cable connects to P9 of the A2-Mode Switch board. See Figure 3-4.

All digital subsystem boards must be removed from the 7854 digital backplane to avoid bus contention and to assure proper operation. Refer to Figure 7-1 in the foldout section for circuit board locations and Chassis-Mounted Plug-on Boards Removal later in this section. The principle function of the Analog Test Board is to monitor the 9 plug-in mode switches and, depending on the state of the Mode Switches, generate control signals for the mainframe Logic board, (A14). These control signals are normally generated within the digital backplane. The Test Board also allows the use of an 067-0587-XX Calibration Fixture for test and calibration of the vertical channel switch circuitry (A19).

To install the Analog Test Board (067-0912-00) proceed with the following instructions:

a. Turn off the power to the 7854.

b. Remove the protective covers.

c. Separate the Display and Acquisition units of the 7854. Refer to Figure 3-12 and Display Unit Kickstand text.

d. Remove the digital circuit board support.

e. Remove all plug-in chassis mounted boards (A25-Digitizer, A26-Control Logic, A27-MPU, A28-RAM, A29-Display, A30-GPIB and A31-ROM).

f. Install the Analog Test Card in the slot that housed the A29-Display board.

g. Connect the cables as indicated in Figure 3-4.

2. Transistor Tester

Description: Dynamic-type tester.

Purpose: Test semiconductors.

Recommended type: TEKTRONIX 577/177 Curve Tracer, TEKTRONIX 576 Curve Tracer, 7CT1N Curve Tracer plug-in unit and a 7000-series oscilloscope system, or a 5CT1N Curve Tracer plug-in unit and a 5000-series oscilloscope system.

3. Digital Multimeter

Description: 10 megohm input impedance and 0 to 1 kilovolt range, ac and dc; ohmmeter, accuracy, within 0.1%. Test probes must be insulated to prevent accidental shorting.

Purpose: Check voltages and resistances.

Recommended type: TEKTRONIX DM 501 Digital Multimeter.

4. Test Oscilloscope with Plug-in's.

Description: Frequency response, dc to 100 megahertz minimum; deflection factor, 5 millivolts to 5 volts/division and 1 milliampere to 1 ampere/division. A 10X, 10-megohm voltage probe should be used to reduce circuit loading for voltage measurements. For current waveforms, use a Tektronix P6021 Current Probe with passive termination, or the equivalent.

Purpose: Check operating waveforms.

Recommended type: Refer to the Tektronix Products catalog for applicable oscilloscope system.

5. Variable Autotransformer

Description: Output variable from 0 to 140 volts, 10 amperes minimum rating. Must have three-wire power cord, plug, and receptacle.

http://manoman.sqhill.com

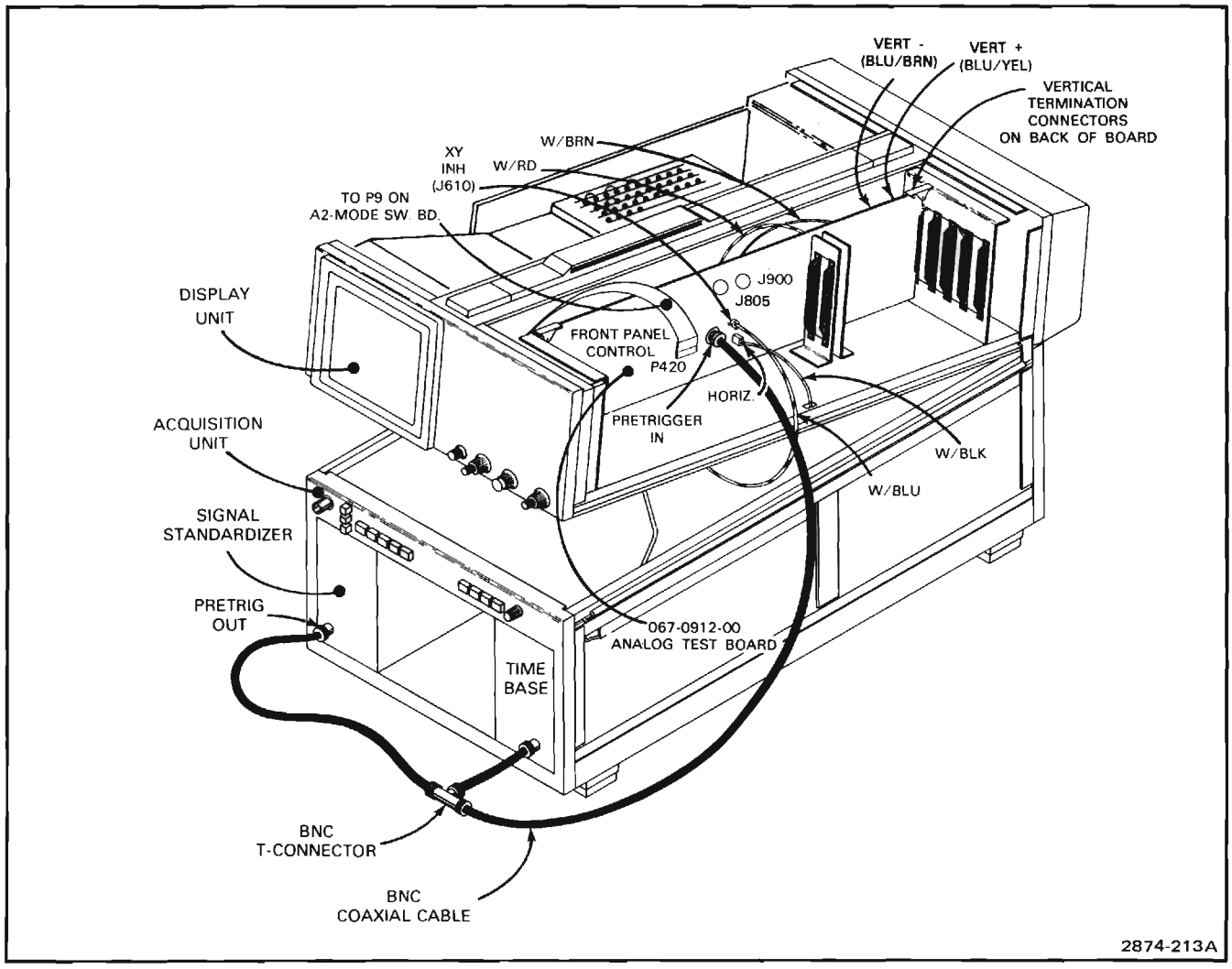

Figure 3-4. Analog Test Board (067-0912-00) interconnections.

Purpose: Vary input line voltage when troubleshooting in the power-supply unit.

Recommended type: General Radio W10MT3W Variac Autotransformer.

6. Isolation Transformer

Description: 1:1 turns ratio, 500 volt-amperes minimum rating, 50-60 cycle. Must have three-wire power cord, plug, and receptacle with ground connection carried through from input to output.

Purpose: To isolate 7854 from line potential when troubleshooting power supply.

Recommended type: Stancor #P6298 (for 115-volt line only) modified to include three-wire power cord, plug, and receptacle.

DIGITAL TROUBLESHOOTING EQUIPMENT

The following equipment is necessary for troubleshooting the Digital Section of the 7854 Oscilloscope. (Refer to Fig. 3-5 for test equipment interconnection information).

1. 7854 Diagnostic Test Interface (067-0911-00)

Description/purpose: The 067-0911-00 serves as the interface between the Microlab 1 mainframe and the digital portion of the 7854 Oscilloscope. It allows memory and I/O devices in the Microlab 1 and in the 067-0911-00 to be added to the 7854 digital bus in order to allow diagnostic monitoring and control of the digital portion of the 7854 Oscilloscope.

http://manoman.sqhill.com

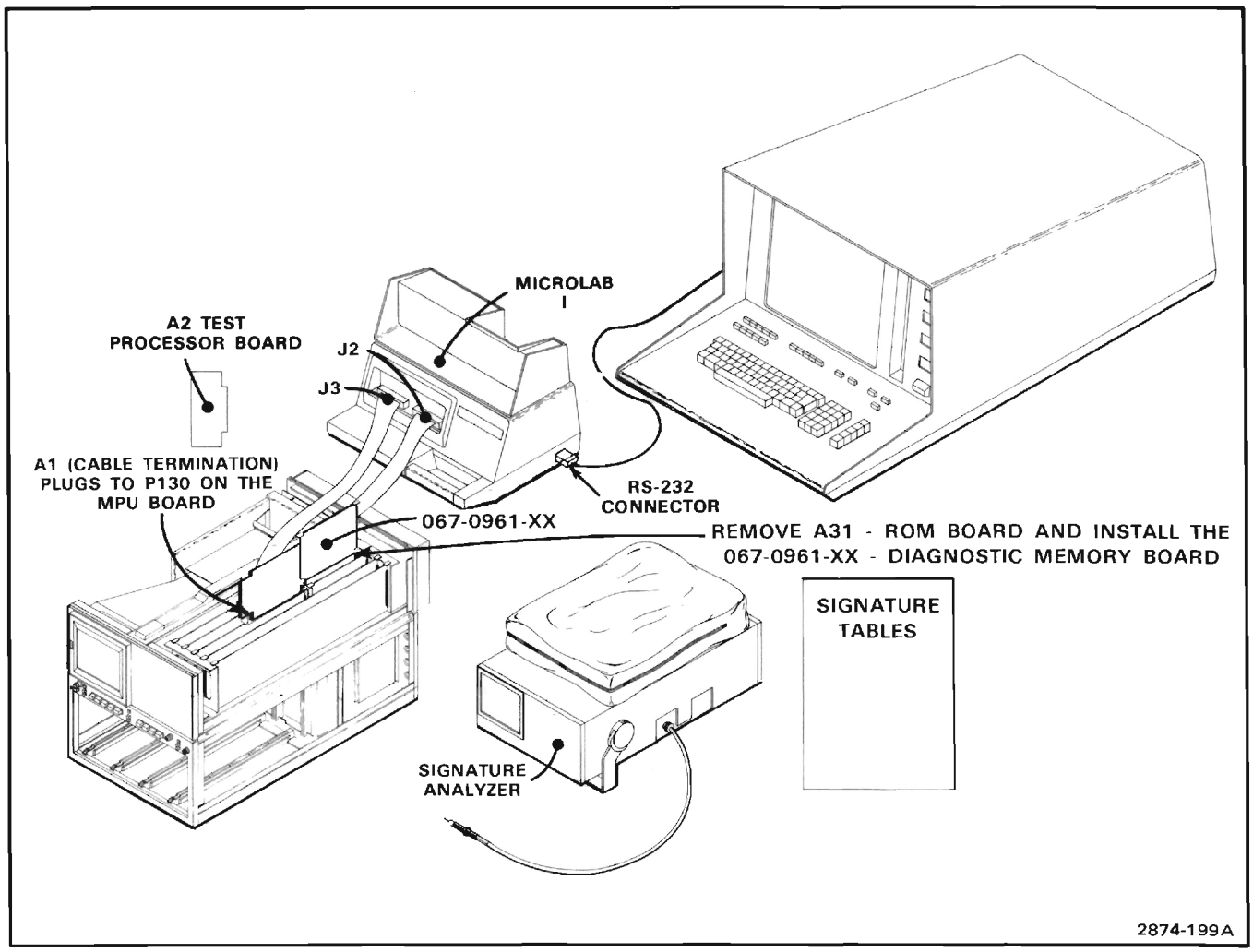

Figure 3-5. Typical digital test/troubleshooting configurations.

2. Tektronix Microlab I Mainframe (067-0892-00)

   Description/purpose: Provides power for the service package and, in conjunction with an external computer (RS232 compatible) terminal provides control of the Diagnostic Memory Board (067-0961-XX).

3. 7854 Diagnostic Memory Board (067-0961-XX)

   Description/purpose: Contains a portion of the service package firmware, as well as specific troubleshooting stimuli and diagnostics particular to the 7854 for which it's designed. (See Service Identification Tag)

4. Data Analyzer

   Description/purpose: Capable of analyzing parallel signal timing, status of serial and parallel data transmissions and signatures.

   Recommended type: Sony/Tektronix 308 Data Analyzer

5. 7854 Signature Tables (070-2972-00)

   Description/purpose: The "7854 Signature Tables" is a complete and cumulative (historical) document of the firmware in the digital portion of the 7854. Each signature table contained in the document is assigned a 2 digit number that is referred to by the Service Identification Tag affixed to the rear panel.

   The "7854 Signature Tables" is part numbered 070-2972-00; the suffix 00, will increment sequentially each time another table is added. Individual signature tables will not be available.

   A chart, in matrix format, is included to correlate signature versions with instrument and board versions.

http://manoman.sqhill.com

6. RS232 Compatible Terminal

   Description/purpose: In conjunction with the Microlab I, provides control of the Diagnostic Memory Board (067-0961-XX), the A2-Test Processor Board, and the Diagnostic Test Interface (067-0911-00).

7. Extender board (067-0913-00)

   Description/purpose: Used with the A30-GPIB and A31-ROM boards (44 pin).

8. Extender board (067-0914-00)

   Description/purpose: Used with the A27-MPU and A28-RAM boards (80 pin).

9. Extender board (067-0915-00)

   Description/purpose: Used with the A26-Control logic and A29-Display boards (124 pin).

NOTE

The combination of the 067-0914-00 (80 pin) and the 067-0913-00 (44 pin) extender boards may be used in place of the 067-0915-00 (124 pin) extender board when a lower circuit board height is required.

DIGITAL TROUBLESHOOTING TECHNIQUES

SELF TEST

When the 7854 is turned on (without memory backup power applied), the digital processor runs four, self-checking tests. Although these tests are not all-inclusive, they indicate if major portions of the processor are properly working. The self-test sequence outlined below begins when power is applied to the 7854.

Step 1: When power is applied the following indicators will light: POWER, selected positions of the A and B TRIGGER SOURCE switches, and all selected indicators on the plug-in units. The following indicators will remain off for approximately three seconds after power-up: all positions of the VERTICAL and HORIZONTAL MODE switches, all intensity indicators, and all red, front panel (measurement keyboard) and Waveform Calculator indicators.

Step 2: All positions of the VERTICAL and HORIZONTAL MODE switches, all INTENSITY indicators, and all red front panel and Waveform Calculator indicators will now light.

Step 3: A fault condition found through any of the four tests is indicated with the lights of the VERTICAL and HORIZONTAL MODE switches. Fault condition codes are listed in Table 3-1.

If a fault code occurs, press any button of the VERTICAL or HORIZONTAL MODE switches and the self-testing will continue. Then refer to the Performance Check Procedure in the Calibration section of the 7854 Service Manual to verify the electrical performance of the instrument.

TABLE 3-1
Self-Test Fault Codes

VERTICAL MODE Indicator Status	HORIZONTAL MODE Indicator Status	Circuitry With Fault
All lights on.	B light on.	RAM
All lights on.	CHOP light on.	ROM
All lights on.	CHOP and B lights on.	Real time Clock
All lights on.	ALT light on.	Display

Troubleshooting procedures for each board in the waveform processing portion (digital backplane) of the 7854 can be found in the 7854 Diagnostic Troubleshooting Manual Package.

Step 4: Successful completion of the self tests is indicated by the issuance of the audible warning tone (if the rear panel AUDIBLE WARNING switch is ON), and the extinguishing of all red indicators, the S and A Intensity indicators, all VERTICAL MODE lights except LEFT, and all HORIZONTAL MODE switch lights except B. In addition, if the READOUT intensity control is set to at least midrange, the message **SELF TEST COMPLETE,** will be displayed on the crt.

http://manoman.sghill.com

PRESET CONDITIONS

After successful completion of the processor self tests, several parameters of the 7854 are set to predetermined conditions. These power-up conditions are:

CRT DISPLAY mode ..... Set to SCOPE
Program Mode ..... Set to EXECUTE
Program Memory ..... Cleared
VERTICAL MODE ..... Set to LEFT
HORIZONTAL MODE ..... Set to B
Stored Waveform Display ..... Not displayed; set to VECTors
P/W (Points/Waveform) ..... Set to 512
Stack Registers ..... Cleared to 0
OPW (Operational Waveform) ..... Set to 0
All waveform memory points Set to the zero value (center horizontal graticule line)
VZR (Vertical Zero Reference ..... Set to 0 (all waveform memories)
Vertical Scale Factor ..... Set to 1 (all waveform memories)
Vertical Scale Factor Unit ..... Set to V (all waveform memories)
Horizontal Scale Factor ..... Set to 1 (all waveform memories)
Horizontal Scale Factor Unit ..... Set to S (all waveform memories)
Constant Registers ..... Set to 0
TTL Output ..... Set HIGH
rsv control flags ..... Set ON

ANALOG TROUBLESHOOTING TECHNIQUES

This troubleshooting procedure is arranged to check the simple trouble possibilities before proceeding with extensive troubleshooting. The first few checks ensure proper connection, operation, and adjustment. If the trouble is not located by these checks, the remaining steps aid in locating the defective component. When the defective component is located, replace it using the replacement procedures given under Corrective Maintenance.

1. CHECK CONTROL SETTINGS

Incorrect control settings can indicate a trouble that does not exist. If there is any question about the correct function or operation of any control on the 7854, refer to the 7854 Operators Manual.

2. CHECK ASSOCIATED EQUIPMENT

Before proceeding with troubleshooting, check that the equipment used with this instrument is operating correctly. Also, check that the input signals are properly connected and that the interconnecting cables are not defective. Check the line-voltage source.

3. VISUAL CHECK

Visually check that portion of the instrument in which the trouble is located. Many troubles can be found by visible indications, such as unsoldered connections, loose cable connections, broken wires, damaged circuit boards, and damaged components.

4. CHECK INSTRUMENT ADJUSTMENT

Check the electrical adjustment of this instrument, or of the affected circuit if the trouble appears in one circuit. The apparent trouble may only be a result of misadjustment. Complete adjustment instructions are given in Section 4, Calibration.

5. ISOLATE TROUBLE TO A CIRCUIT

To isolate trouble to a particular circuit, note the trouble symptom. The symptom often identifies the circuit in which the trouble is located. When trouble symptoms appear in more than one circuit, check the affected circuits by taking voltage and waveform measurements. Also check for the correct output signals at the front- and rear-panel output connectors with a test oscilloscope. If the signal is correct, the circuit is working correctly up to that point.

Incorrect operation of all circuits often indicates trouble in the power supply. However, a defective component elsewhere in the instrument can appear as a power-supply trouble and may also affect the operation of other circuits. If incorrect operation of the power supplies is suspected, first, check for correct voltages of the individual supplies, then, refer to Troubleshooting High-Efficiency Power-Supply Unit given later in this section.

The 7854 Troubleshooting Chart in the Diagrams and Circuit Board Illustrations Section 7, provides a guide for locating defective circuits.

After the defective circuit has been located, proceed with steps 6 and 7 to locate the defective component(s).

6. CHECK VOLTAGES AND WAVEFORMS

Often the defective component can be located by checking for the correct voltages or waveforms in the circuit. Typical voltages and waveforms are given in Section 7, Diagrams and Circuit Board Illustrations.

NOTE

Voltages and waveforms given in Section 7, Diagrams and Circuit Board Illustrations, are not absolute and may vary slightly between 7854 Oscilloscope mainframes. To obtain operating conditions similar to those used to take these readings, see the appropriate schematic.

http://manoman.sqhill.com

7. CHECK INDIVIDUAL COMPONENTS

CAUTION

Most transistors and integrated circuits are soldered in and thus difficult to remove without damaging the circuit board and/or component.

The following procedures describe methods of checking individual components in the 7854. Components which are soldered in place are best checked by first disconnecting one end. This isolates the measurement from the effects of surrounding circuitry.

WARNING

To avoid electric-shock hazard, always disconnect the 7854 from the power source before removing or replacing components.

Fuses

Check for open fuses by checking continuity with an ohmmeter.

Transistors

A good check of transistor operation is actual performance under operating conditions. A transistor can most effectively be checked by substituting a new component for it (or one which has been previously checked). However, be sure that circuit conditions are not such that a replacement transistor might also be damaged. If substitute transistors are not available, use a dynamic tester. Static-type testers are not recommended, since they do not check operation under simulated operating conditions.

Integrated Circuits

Integrated circuits can be checked with a voltmeter, test oscilloscope, or by direct substitution. A good understanding of the circuit operation is essential to troubleshooting circuits using integrated circuits. In addition, operating waveforms, logic levels, and other operating information for the integrated ciruits are given in Section 2, Theory of Operation and Section 7, Diagrams and Circuit Board Illustrations. Use care when checking voltages and waveforms around the integrated circuits so that adjacent leads are not shorted together. A convenient means of clipping a test probe to the in-line, multi-pin integrated circuits is with an integrated-circuit test clip. This device also doubles as an integrated-circuit extraction tool.

Diodes

A diode can be checked for an open or shorted condition by measuring the resistance between terminals with an ohmmeter on a scale having a low internal source current, such as the R X 1k scale. The resistance should be very high in one direction and very low when the meter leads are reversed.

CAUTION

When checking diodes, do not use an ohmmeter scale that has a high internal current, since high currents may damage the diodes under test.

Resistors

Check the resistors with an ohmmeter. Resistor tolerances are given in Section 6, Replaceable Electrical Parts. Normally, resistors do not need to be replaced unless the measured value varies widely from the specified value.

Capacitors

A leaky or shorted capacitor can best be detected by checking resistance with an ohmmeter on the highest scale. Do not exceed the voltage rating of the capacitor. The resistance reading should be high after initial charge of the capacitor. An open capacitor can best be detected with a capacitance meter or by checking if the capacitor passes ac signals.

8. REPAIR AND ADJUST THE CIRCUIT

If any defective parts are located, follow the replacement procedures given under Component Replacement in this section. Check the performance of any circuit that has been repaired or that has had any electrical components replaced. Adjustment of the circuit may be necessary.

TROUBLESHOOTING THE HIGH-EFFICIENCY POWER-SUPPLY UNIT

GENERAL

The following information is provided to facilitate troubleshooting the high-efficiency power-supply unit. Information contained in other sections of this manual should be used in conjunction with this procedure to aid in locating a defective component. An understanding of the circuit operation is valuable in locating troubles. See Section 2, Theory of Operation, for this information. Specifications for the troubleshooting equipment referred to in this procedure are given earlier in this section under Troubleshooting Equipment.

WARNING

Extreme caution must be used when troubleshooting in the power-supply unit due to the line voltage and the high-voltage/high-current potentials present in the unit.

http://manoman.sqhill.com

When a fault condition occurs, which is not of sufficient magnitude to open the line fuse, power-supply protection circuitry will cause the inverter to operate in a pulse mode. In this mode the inverter will turn on for a short period of time, and then turn off for a longer period of time. This cycle repeats until the malfunction is corrected. This pulse mode causes either a "ticking" or a "chirping" sound. Whenever either of these sounds is heard, turn off the 7854 and proceed with the Preliminary Procedure given below.

PRELIMINARY PROCEDURE

WARNING

To avoid electric shock, always disconnect the instrument from the power source before removing or replacing components or plug-in units.

1. Remove all plug-in units from the mainframe.

2. Set the CONTROL ILLUMINATION switch on the rear panel to the OFF position, and the GRAT ILLUM switch on the front panel to the fully-clockwise position.

3. Remove the power-supply unit from the mainframe following the procedure given later in this section under Component Removal and Replacement.

4. Connect the power-cord plug of the 7854 to the output of a variable autotransformer which is set for 115 volts. Connect the autotransformer to an isolation transformer and plug the isolation transformer into a 115-volt power source.

5. Push the 7854 POWER button in (to turn the instrument on) and note the trouble symptoms.

6. Turn the 7854 off and proceed to the appropriate step in the Troubleshooting Procedure as indicated by the Trouble Symptoms column in Table 3-2.

TROUBLESHOOTING PROCEDURE

Step A: Check Line Fuse

To check the line fuse, perform the following procedure:

1. Check the line fuse (F10), located on the rear panel of the power-supply unit, for continuity and proper rating as given in Section 6, Replaceable Electrical Parts.

2. If the line fuse is open, replace with a new one of proper rating.

Step B: Isolate Malfunction from the Mainframe Circuitry

To isolate the malfunction perform the following procedure:

TABLE 3-2
Recommended Power Supply Troubleshooting Sequence

Trouble Sympton	Procedure	Proceed to Troubleshooting Step:
7854 inoperative; no pulse mode.	1. Check line fuse.	A
7854 inoperative; no pulse mode; line fuse open.	1. Check line input circuit.	D
	2. Check LV rectifier circuit.	H
	3. Check inverter circuit.	G
7854 inoperative; no pulse mode; line fuse normal.	1. Check inverter circuit.	G
7854 operating in the pulse mode.	1. Isolate malfunction from the mainframe circuitry	B
	2. Check pre-regulated power supplies.	C
	3. Check crt and high-voltage circuits.	E
	4. Check inverter control circuit.	F
	5. Check inverter cirucit.	G

http://manoman.sqhill.com

WARNING

Use extreme caution when troubleshooting in the power-supply unit, to avoid electric shock. Stored dc potentials on the A23-Inverter circuit board remain long after the instrument is disconnected from the power source. Verify that the power-cord plug is disconnected and that the line storage capacitors (C16 and C17) are completely discharged before attempting any repairs or ohmic measurements. (A warning-indicator neon bulb, located on the A23-Inverter board, flashes when this stored voltage exceeds about 80 volts. However, simply because the neon bulb is not flashing does not mean that the capacitors are fully discharged.)

1. Remove the 7854 power-cord plug from the power source.

2. Remove the protective cover from the power-supply unit following the procedure under Access to Components in the Power-Supply Unit.

3. Manually discharge the line storage capacitors using the procedure given later in this section, under Access to Components in the Power-Supply Unit.

4. Check the resistance of the power supplies at the test points given in Table 3-3.

NOTE

Place the Common lead of the ohmmeter to ground when measuring power-supply resistance.

TABLE 3-3
Typical Power-Supply Resistance

Power Supply Test Point	Ohmeter Scale	Typical Resistance Reading
+130 V	20 K	7.12 K
+50 V	20 K	2.65 K
+15 V	20 K	0.04 K
+5 V	2 K	0.004 K
-5 V	2 K	0.068 K
-15 V	2 K	0.05 K
-50 V	2 K	0.57 K

5. If any of the resistance readings are significantly lower than that listed, remove the electrical connections between the mainframe and the power-supply unit. Disconnect P17, P82, P83 on the A25-Low-Voltage Regulator board. This isolates the circuitry in the mainframe from the power-supply unit. Recheck the resistance. If the readings remain low, the malfunction is located within the mainframe circuits. If the readings increase to normal or above, the malfunction is in the power supplies.

6. Replace all electrical connections that were disconnected in part 5.

Step C: Check the Pre-Regulated Power Supplies

To check the pre-regulated power supplies, perform the following procedure:

1. Connect a 10X voltage probe from the test oscilloscope to resistor R84 on the A12-Control Rectifier board. Set the test oscilloscope vertical deflection factor as necessary for an on-screen display; set the horizontal sweep rate for 2 milliseconds/division.

2. Set the variable autotransformer for 115 volts. Connect the 7854 power-cord plug to the variable autotransformer; turn on the 7854.

3. Compare the waveform on the test oscilloscope to those shown in Figure 3-6. If the waveform resembles that of Figure 3-6A, proceed to Step E of this procedure. If it resembles that of Figure 3-6B, proceed with part 4 of this step.

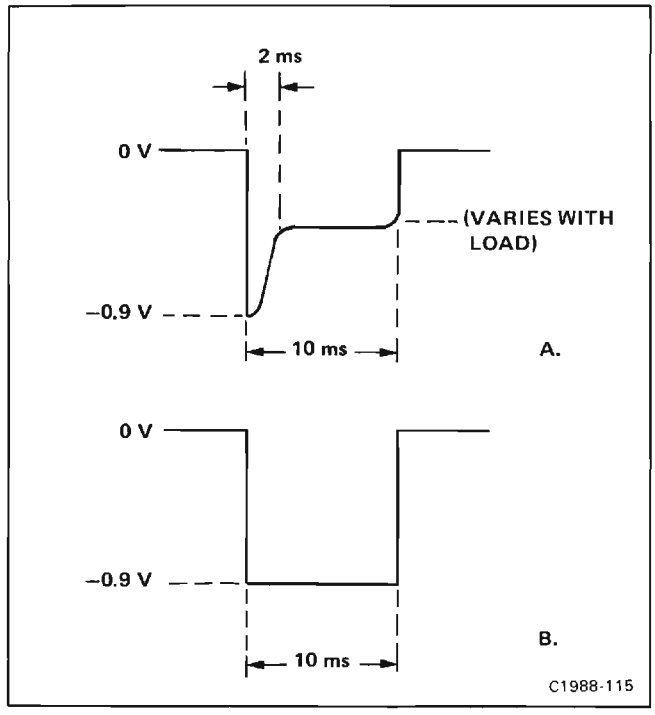

Figure 3-6. Current sensing waveform at R84.

http://manoman.sqhill.com

4. Remove the 10X voltage probe from R84. Set the test oscilloscope vertical coupling to dc and the horizontal sweep rate to 10 milliseconds/division.

5. Connect the 10X probe to each power supply at the test points given in Table 3-4. Note the polarity, amplitude, and shape of the waveform present at each test point. (Adjust the vertical deflection factor of the test oscilloscope as necessary to maintain an on-screen display.)

TABLE 3-4
Burst Voltage Test Points

Pre-Regulated Power Supply	Test Point Located on Control Rectifier Board
+108 V	TP126
+54 V	Pin 4 of P52
+17 V	Pin 6 of P52
-17 V	Pin 2 of P52
+8 V	Pin 7 of P50
-54 V	Pin 3 of P52
+5 V Lights	Pin 10 of P82

NOTE

Look for a power supply where the burst voltage is very low in relation to the specified supply voltage.

6. When a low supply voltage is found, disconnect the 7854 from the power source and discharge the line storage capacitors (Fig. 3-7) following the procedure given under Access to Components in the Power-Supply Unit. Check for shorted components in the suspected power supply; also check the filter capacitors for leakage.

Step D: Check Line Input Circuit

To check the input circuit, perform the following procedure:

1. Disconnect the 7854 from the variable autotransformer and discharge the line storage capacitors (Fig. 3-7) following the procedure given under Access to Components in the Power-Supply Unit.

2. Replace the line fuse.

3. Check diode bridge CR15 on the A23-Inverter board and the associated line input circuit for a shorted component. If the circuit appears normal, connect the power-cord to the variable autotransformer.

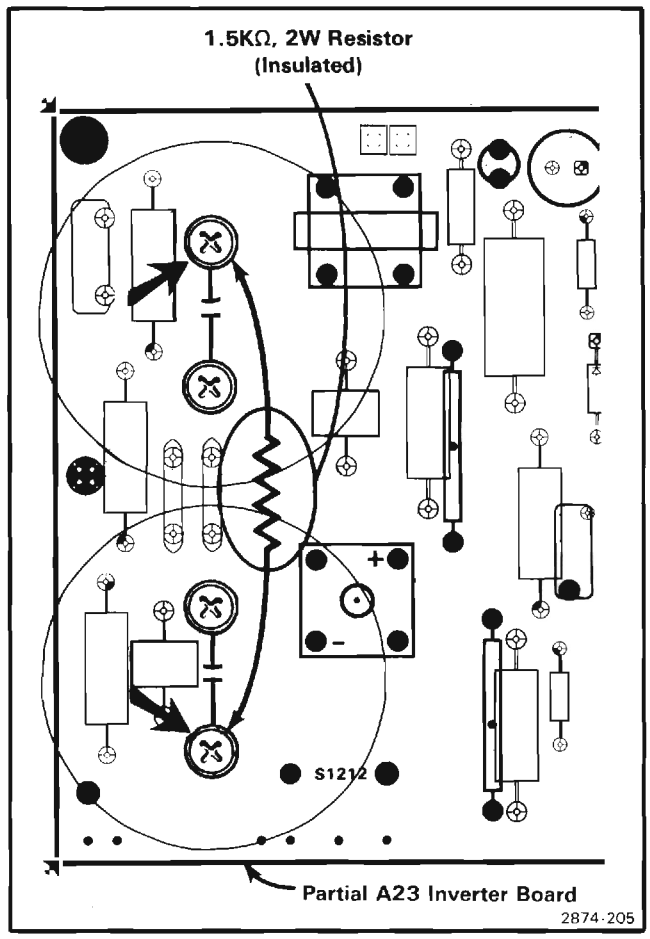

Figure 3-7. Location of screws used for discharging line storage capacitors.

4. Attach the test probe from the digital multimeter to one of the screws used to discharge C16 and C17 (see Fig. 3-7). Connect the other test lead to ground. Set the variable autotransformer for 20 volts and turn the 7854 on.

5. Check for a dc voltage on the digital multimeter of approximately 27 volts. Move the test probe to the other capacitor screw. Check for a dc voltage which is both equal and opposite in polarity, from the previous voltage. (This checks the condition of the line storage capacitors.)

Step E: Check Crt and High-Voltage Circuit

To check the crt circuitry, perform the following procedure:

1. Disconnect the 7854 from the power source and discharge the line storage capacitors following the procedure given under Access to Components in the Power-Supply Unit.

2. Remove multi-lead cable P40 from the A12-Control Rectifier board.

http://manoman.sqhill.com

3. Set the variable autotransformer for 115 volts. Connect the 7854 power-cord plug to the variable autotransformer; turn the 7854 on.

4. Check for stable operation (no pulse mode) of the power supplies. If the power supplies operate properly, a crt failure or malfunction in the high-voltage circuitry is indicated.

Step F: Check the Inverter Control Circuit

To check the inverter control circuit, perform the following procedure:

1. Disconnect the 7854 from the power source and discharge the line storage capacitors following the procedure given under Access to Components in the Power-Supply Unit.

2. Remove Q54 from the A12-Control Rectifier board.

3. Connect the 7854 power-cord plug to the variable autotransformer. Turn the 7854 on and apply 115 volts from the variable autotransformer. If the power supplies stabilize, check the inverter control circuit for a malfunction. If the 7854 continues in pulse mode, proceed to part 4 of this step.

4. Repeat part 1 of this step. Then remove Q52 from the A12-Control Rectifier board.

5. Set the variable autotransformer to 0 volts. Connect the 7854 power-cord plug to the variable autotransformer. Turn the 7854 on. While monitoring the +108 V test point on the A25-Low-Voltage Regulator board with a voltmeter, slowly increase the output of the variable autotransformer until the voltmeter just reads +108 volts.

NOTE

If the variable transformer's output is increased past the point where the voltmeter just reaches a reading of +108 volts, the 7854 will switch to pulse mode.

6. If the power supplies stabilize, check U75 and the inverter control circuit for a malfunction. If the 7854 continues in the pulse mode, proceed to Step G of this procedure.

Step G: Check Inverter Circuit

To check the inverter circuit, perform the following procedure:

1. Disconnect the 7854 power-cord plug from the power source and discharge the line storage capacitors following the procedure given under Access to Components in the Power-Supply Unit.

2. Remove Q34, Q40, CR34, and CR41 on the A23-Inverter board and check the characteristics of each with a curve tracer. Install the checked or replaced components in the A23-Inverter board. Replace the line fuse, if it is open.

3. If the faulty component was not found, check Q43, Q45 and VR45 with a curve tracer.

NOTE

A shift in the zener voltage of VR45 can cause erratic operation of the inverter circuit.

4. If the 7854 continues in the pulse mode or, continues to below line fuses, check the current waveform through T30. To do this, first repeat part 1 of this step. Then connect a current probe from the test oscilloscope to the gray lead that passes through toroid transformer T30. Set the test oscilloscope for a vertical deflection factor of about 1 volt/division and a horizontal sweep rate of 2 milliseconds/division. Connect the 7854 power-cord plug to the variable transformer which is set for 0 volt. Turn the 7854 on and slowly increase the variable autotransformer's output to about 60 volts. Check for a burst waveform on the test oscilloscope (similar to that shown in Fig. 3-8).

NOTE

The burst waveform indicates that the inverter circuit is attempting to start. If no burst waveform occurs, proceed to part 6; if a burst waveform is obtained, proceed to part 5.

5. If a burst waveform was obtained in part 4 above, check for stable inverter operation when the line input voltage is increased to about 85 volts. Figure 3-9 shows the current waveform at T30 for normal inverter operation at a line source of 115 volts. (NOTE: The test oscilloscope horizontal sweep rate has been changed to about 50 microseconds/division for Fig. 3-9.)

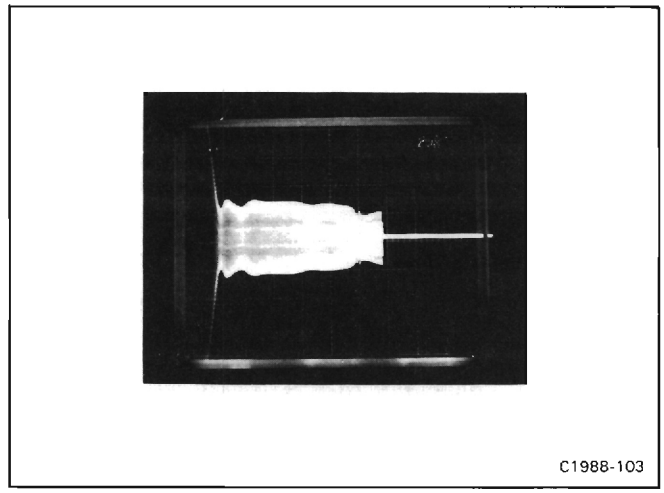

Figure 3-8. Current waveform of T30 showing burst operation at line voltage of about 60 volts.

http://manoman.sghill.com

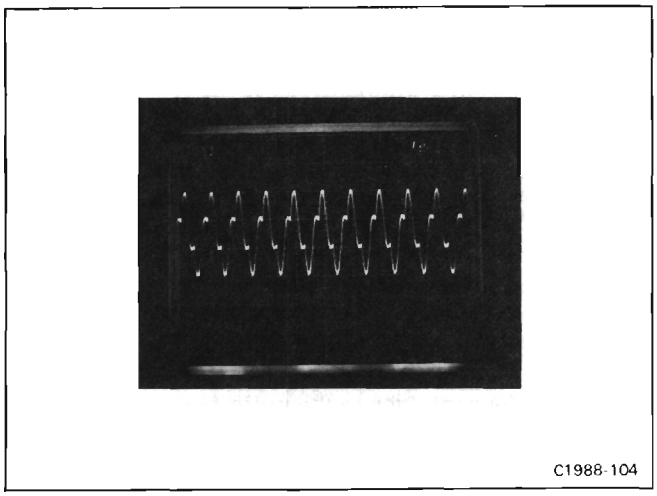

Figure 3-9. Current waveform at T30 for normal inverter operation at line voltage of 115 volts.

6. If no burst waveform occurred in part 4, repeat part 1 of this step. Then remove the current probe from the 7854 and the test oscilloscope. Connect a 10X voltage probe from the test oscilloscope to TP1234 on the A23-Inverter board. Set the variable autotransformer for 20 volts and check for a filtered line waveform which is centered about 0 volt. (see Fig. 3-10). If the waveform is not centered check Q46, CR32, CR40, CR49, and CR45 for shorts or leakage.

Step H: Check LV Rectifier Circuit

1. Disconnect the 7854 power-cord plug from the power source and discharge the line storage capacitors in the power-supply unit, following the procedure given under Access to Components in the Power-Supply Unit. Inspect the A12-Control Rectifier board and connecting cables for shorts and damaged components.

2. Remove dual diode CR51 from the A12-Control Rectifier board and check with a curve tracer. Re-install tested or replaced parts, making certain that the case is not shorted to the heat sink.

3. Lift one leg each of CR40, CR41, CR42, and CR43 and check with a curve tracer. Reconnect tested or replaced parts.

4. Lift one leg each of CR30, CR31, CR32, CR33, CR50, and CR53 and check with a curve tracer. Reconnect tested or replaced parts.

5. Check the electrolytic capacitors which filter the supplies, including C54 (under the board) for shorts.

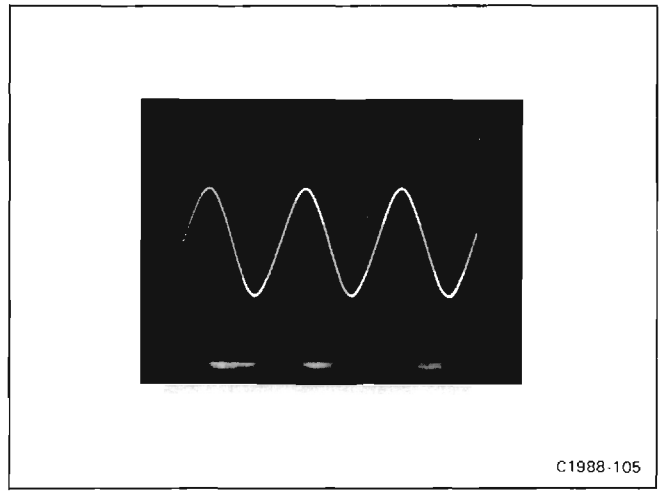

Figure 3-10. Waveform at TP34 on the A23-Inverter board with the line voltage at about 20 volts.

CORRECTIVE MAINTENANCE

Corrective maintenance consists of component replacement and instrument repair. Special techniques required to replace components in the 7854 Oscilloscope Mainframe are given here.

OBTAINING REPLACEMENT PARTS

Most electrical and mechanical part replacements for the 7854 can be obtained through your Tektronix Field Office or representative. However, many of the standard electronic components can be obtained locally.

Before purchasing a part from a source other than Tektronix, Inc., check the parts list for value, tolerance, rating, and description. Some parts are manufactured or selected by Tektronix, Inc. to satisfy particular requirements, or are manufactured for Tektronix, Inc. to our specifications.

NOTE

When selecting replacement parts, remember that the physical size and shape of a component may affect its performance in the instrument. All replacement parts should be direct replacements unless you know that a different component will not adversely affect instrument performance.

http://manoman.sqhill.com

Most of the mechanical parts used in this instrument have been manufactured by Tektronix, Inc. To determine manufacturer of parts, refer to Parts List, Cross Index Mfr. Code Number to Manufacturer.

When ordering replacement parts from Tektronix, Inc., include the following information:

1. Instrument type.

2. Instrument serial number.

3. A description of the part (if electrical, include circuit number, if crt, also include all data on crt tag).

4. Tektronix part number.

SOLDERING TECHNIQUES

WARNING

To avoid electric-shock hazard, disconnect the instrument from the power source before soldering.

The reliability and accuracy of this instrument can be maintained only if proper soldering techniques are used when repairing or replacing parts.

The desoldering and removal of parts is especially critical and should be done only with a vacuum solder extractor, further, one approved by a Tektronix Inc., Service Center.

Use wire solder with rosin core, 63% tin, 37% lead. Contact your local Tektronix Inc. representative or field office for approved solders.

Several of the circuit boards in this instrument have as many as eight (8) layers. Conductive paths between the top and bottom board layers may connect with one or any number of inner layers. Once this inner conductive path is broken (Due mainly to poor soldering practices) between the top and bottom layer, the board is unuseable and must be replaced. Damage can void warranty.

CAUTION

Only an experienced maintenance person, proficient in the use of vacuum type desoldering equipment, should attempt repair of any board in this instrument. The following multi-layer board assemblies are partic ularly susceptable to heat damage: A8, A11, A12, A13, A14, A26, A27, A28, A29. Damage can void warranty.

When soldering on circuit boards or small wiring, use only a 15-watt, pencil-type soldering iron. A higher wattage soldering iron can cause the etched circuit wiring to separate from the board base material and melt the insulation from small wiring. Always keep the soldering-iron tip properly tinned to ensure the best heat transfer to the solder joint. Apply only enough heat to make a good solder joint. To protect heat-sensitive components, hold the component lead with a pair of long-nose pliers between the component body and the solder joint.

The following technique should be used to replace a component on any of the circuit boards:

1. Touch the vacuum desoldering tool to the lead at the solder connection. Never place the iron directly on the board, as this may damage the board.

NOTE

Some components are difficult to remove from the circuit boards due to a bend placed in each lead during machine insertion of the component. The purpose of the bent leads is to hold the component in position during a flow-solder manufacturing process which solders all components at once. To make removal of machine inserted components easier, straighten the component leads on the back of the circuit board, using a small screwdriver or pliers.

When removing multi-pin components; i.e., IC's do not heat adjacent conductors consecutively (see Fig. 3-11). Allow a moment for the circuit board to cool before proceeding to the next pin.

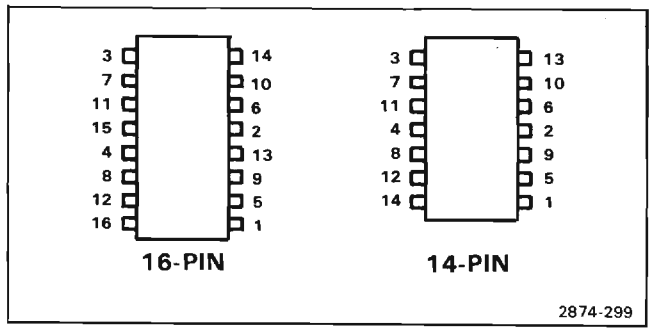

Figure 3-11. Recommended desoldering sequence for multi-pin devices.

http://manoman.sghill.com

CAUTION

Excessive heat can cause the etched circuit wiring to separate from the board base material.

Never allow the solder extractor to remain on the board for more than three (3) seconds. Solder wick, spring-actuated or squeeze-bulb solder suckers, and heat blocks (for multi-pin components) must not be used. Damage can void warranty.

Do not allow solder or solder flux to flow under printed circuit board switches. The printed circuit board is an integral part of the switch and intermittent operation can occur if contaminated.

Soldering in the area of Hypcon connectors requires special precautions. See the discussion of Hypcon connectors under Semiconductors in this section.

2. Bend the leads of the replacement components to fit the holes in the circuit board. If the component is replaced while the board is mounted in the instrument, cut the leads so they will just protrude through the board. Insert the leads into the holes in the board so that the component is firmly seated against the board, or as originally positioned.

3. Touch the iron to the connection and apply enough solder to make a firm solder joint.

4. Cut off any excess lead protruding through the board (if not clipped in step 2).

5. Clean the area around the solder connection with a flux removing solvent. Be careful not to remove information printed on the circuit board.

COMPONENT REMOVAL AND REPLACEMENT

WARNING

To avoid electric-shock hazard, always disconnect the instrument from the power source before removing or replacing components or plug-in units.

The exploded-view drawings associated with the Replaceable Mechanical Parts list (located at the rear of this manual) may be helpful in the removal or disassembly of individual components or sub-assemblies.

DISPLAY UNIT KICKSTAND

The Display unit of the 7854 Oscilloscope mainframe is equipped with a kickstand to ease access to interior components of the instrument (see Fig. 3-12). To use the kickstand feature, disconnect the power-cord plug from the power source. Then remove the side and top panels as described under Cabinet Panel Removal. Remove the two frame coupling screws on each side of the 7854 This will allow the upper portion of the frame coupling to be pivoted outward. The two units can now be separated at the front of the instrument (the kickstand will hold the units apart). To assemble the units, disengage the kickstand and reverse the disassembly procedure.

POWER-SUPPLY UNIT REMOVAL

The power-supply unit can be slid out the rear of the 7854 to gain better access to the A14-Logic board, A13-Trigger Amplifier board, A22-Low-Voltage Regulator board, or for power-supply maintenance and troubleshooting. To remove the power-supply unit from the mainframe, first remove the four screws which hold the power-supply unit to the rear frame of the instrument (see Fig. 3-13). Slide the power-supply unit out of the mainframe until it can be set down on the work surface (be sure to guide the interconnecting cables so they do not catch on other parts of the instrument). The power-supply unit remains electrically connected to the rest of the instrument in this position, allowing for troubleshooting.

POWER SUPPLY UNIT INSTALLATION

NOTE

Proper interconnecting cable positioning is important when installing the Power Supply Unit in the mainframe. The 2 ribbon cables (from P82 and P83 on the A22-Low Voltage Regulator board) must be dressed away from the 2 coaxial cables (from P40 on the A12-Control Rectifier board).

Position the mainframe on its right side and remove the bottom panel to gain access to the interconnecting cables.

http://manoman.sqhill.com

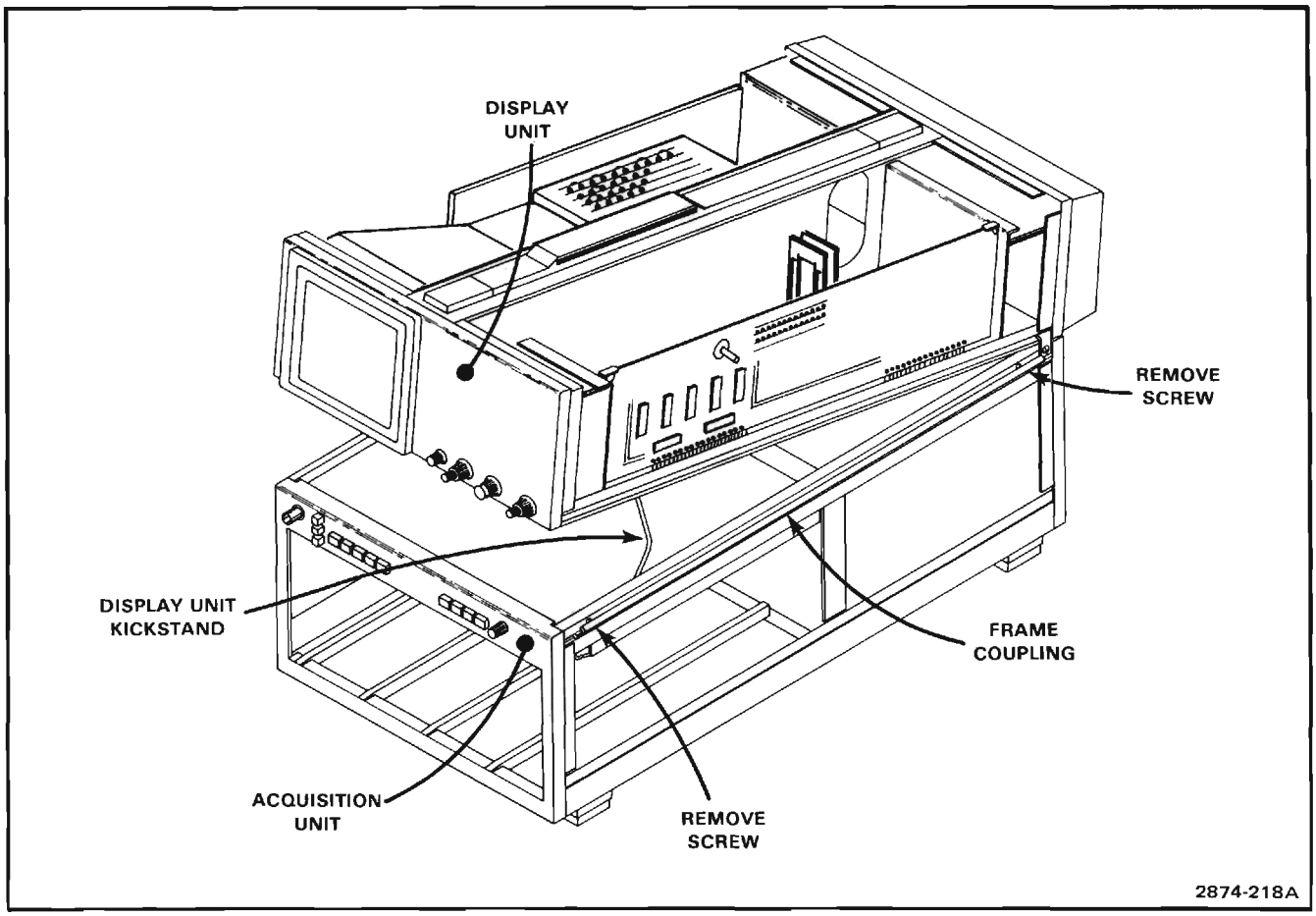

Figure 3-12. Use of the Display Unit kickstand.

NOTE

Assure all harmonica connectors on the Power Supply Unit and A11-Main Interface board are properly seated.

Guide the Power Supply Unit into the mainframe while dressing the 2 ribbon cables (from P82 and P83 on the A22-Low Voltage Regulator board) toward the lower corner of the Display Unit, and the gray power cord with green gound wire, up against the A19-Vertical Channel Switch board support. Be careful not to pinch the interconnecting cables when replacing the unit. Be sure that all the securing screws are tight enough to hold the power-supply unit properly in place.

Access to Components in the Power-Supply Unit

To reach the components located inside the power-supply unit for maintenance or repair, use the following procedure:

WARNING

Disconnect the instrument from the power source and allow the line storage capacitors to discharge, before removing the power-supply unit cover. The line storage capacitors remain charged with high voltage dc for several minutes after the line power is disconnected unless they are manually discharged. A warning-indicator (neon bulb) located on the A23-Inverter board, flashes when this stored voltage exceeds about 80 volts. Do not remove the power-unit cover while this light is flashing.

1. Slide out the power unit as previously described.

2. Remove the four small screws that secure the cover to the rear heatsink.

3. Remove the 9 screws that attach the sides of the cover to the power unit chassis.

http://manoman.sqhill.com

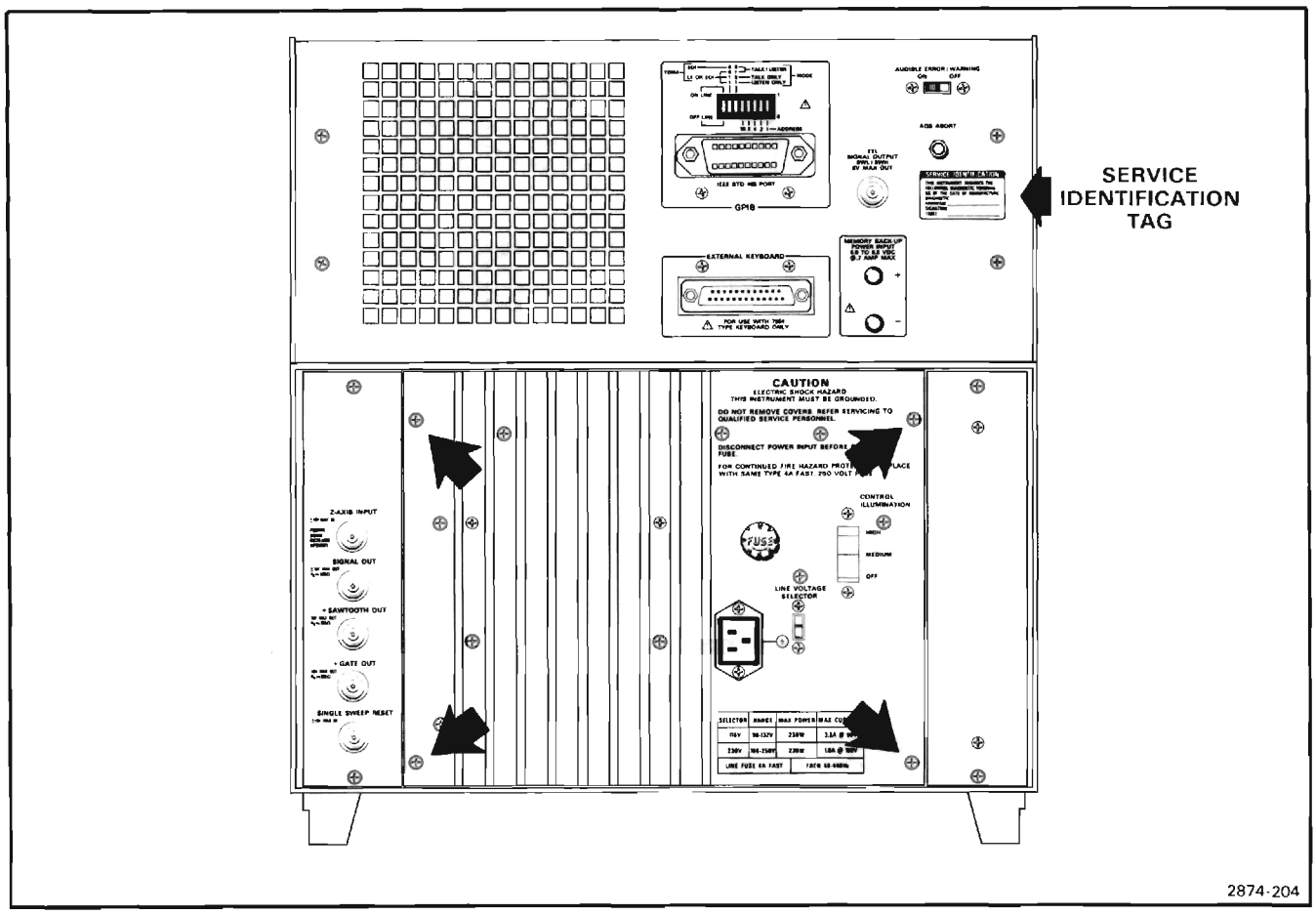

Figure 3-13. Power Supply Unit securing screws and service identification tag location.

4. Disconnect the two coaxial connectors from P40 on A12-Control Rectifier board.

5. Remove the cover from the power-supply unit.

6. The power-supply unit is now open for maintenance or repair. If the 7854 is to be operated with the cover removed, first reconnect the coaxial cables to the A12-Control Rectifier board.

7. Reverse the order of removal to replace the power-unit cover.

Before performing maintenance or taking ohmic measurements in the power-supply unit, manually discharge the line storage capacitors (C16 and C17) as follows:

1. Remove the protective cover from the power-supply unit following the preceding procedure.

2. Apply a 1.5-kilo-ohm, 2-watt, insulated resistor across the capacitor screws as indicated in Figure 3-7.

CATHODE-RAY TUBE REMOVAL

Remove the cathode-ray tube (crt) as follows:

Refer to Section 8, Replaceable Mechanical Parts for an exploded view drawing to aid in identification of parts mentioned in the following procedure.

WARNING

The crt may retain a dangerous electrical charge. Before removing the crt, the anode must be fully discharged by shorting the anode lead from the crt to the chassis. Wait approximately ten minutes and again firmly short this lead to the chassis. Then remove the crt.

http://manoman.sqhill.com

Use care when handling a crt. Breakage of the crt causes a high-velocity scattering of glass fragments (implosion). Protective clothing and safety glasses should be worn. Avoid striking the crt on any object which might cause it to crack or implode. When storing a crt, place it in a protective carton or set it face down in a protected location on a smooth surface with a soft mat under the faceplate.

1. Remove the left side panel.

2. Remove the crt base-pin socket from the rear of the crt.

3. Loosen the two screws located above and below the crt base pins until the tension of the springs on these screws is released. Then, press in upon the screws to be certain that the crt clamp inside the crt shield is loose.

4. Disconnect the 4 vertical deflection-plate connectors from the left side of the crt.

5. Disconnect the 2 horizontal deflection-plate connectors from the top of the crt.

6. Disconnect the crt anode lead and ground it to the chassis to dissipate any stored charge remaining in the crt.

7. Remove the frame mask with, crt scale mask and light filter.

8. Remove the 4 screws securing the crt bezel to the front panel. Remove the bezel while disconnecting the 3-pin connector from the left rear of the bezel.

9. Remove the plastic implosion shield and the graticule light assembly. (The graticule light assembly need not be unsoldered from its leads.)

10. Hold one hand on the crt faceplate and gently push forward on the crt base with the other. Slowly pull the crt out from the front of the instrument while guiding the crt anode lead through the hole in the crt shield.

CATHODE-RAY TUBE REPLACEMENT

Replace the cathode-ray tube (crt) as follows:

1. Insert the crt into the shield, guiding the crt anode plug through the hole in the crt shield. Set the crt firmly against the front-panel casting. (Check that crt front supports are positioned correctly).

2. Clean the crt faceplate, implosion shield and the light filter with denatured alcohol.

3. Reconnect the multi-pin connector to the crt bezel (align the arrow on the connector with the arrow on the bezel).

4. Hold the implosion shield in position and replace the crt bezel. Firmly tighten the 4 screws, making sure that the implosion shield is properly aligned. Replace the graticule light assembly, crt scale mask frame, and light filter. Tighten the 4 screws, making sure that the light filter is properly aligned.

5. Replace the plastic frame mask.

6. Gently push forward on the crt base to determine that the crt is as far forward as possible. Then tighten the 2 screws beside the crt base until the springs on the screws are fully compressed.

7. Place the crt base-pin socket on the crt base pins.

8. Reconnect the crt anode plug.

9. Carefully reconnect all cables and crt neck-pin connectors. (The Vertical Output board may be tilted outward to make the vertical deflection plate pins more accessable).

10. Replace the side panel.

NOTE

The replacement of the crt will require that the instrument be re-adjusted. Refer to Section 4, Calibration.

CIRCUIT BOARDS

If a circuit board is damaged beyond repair, replace the entire board assembly. Part numbers are given in Section 6, Replaceable Electrical Parts, for completely wired boards.

The pin connectors, except for coaxial-type connectors, used for interconnection between circuit boards are color-coded to aid in identification and circuit tracing. The color of the connector body matches the resistor color-code for the last digit of the connector circuit number; e.g., P62 is red, P63 is orange, etc.

http://manoman.sghill.com

Most of the circuit boards in this instrument are mounted on the chassis; pin connectors are used for electrical interconnection with chassis mounted components and other circuit boards. Several boards plug onto the rear of the A11-Main Interface board; feed-thru connectors connect the plug-on boards to the A11-Main Interface board.

Chassis-Mounted Boards

Remove and replace all chassis-mounted circuit boards as follows:

1. Disconnect the power source from the 7854 mainframe.

2. Remove the appropriate side panel to gain access to the boards.

3. Disconnect all pin connectors attached to the board, or which connect the board to other parts of the instrument.

4. Remove the securing screws.

5. Remove the chassis-mounted board.

6. Replace chassis-mounted boards in the reverse order of removal. Match the index arrow on the multi-pin connectors to the corresponding arrow on the board.

Chassis-Mounted Plug-on Boards

Remove and replace the chassis-mounted plug-on boards as follows:

1. Disconnect the power source from the 7854 Mainframe.

2. Remove the appropriate side panel to gain access to the boards

3. Remove the digital circuit board support.

4. Disconnect all pin connectors attached to the board, or which connect the board to other parts of the instrument. If a pin connector is not accessible with the board installed, proceed to steps 5 and 6 then remove the connectors.

5. With the thumb and forefinger, pry up simultaneously on the board ejectors (located on each end of the board) until the board clears the mating receptables.

6. Remove the board from the instrument.

7. To replace the board, first plug in all pin connectors that are not accessible when the board is installed.

NOTE

The board ejectors must be in the horizontal position for the edge pins to seat.

8. Position the board over the board guides. Slide the board down until the board edge pins mate with the receptacles, then press firmly and evenly until the board edge pins bottom in the receptacles.

9. Connect all remaining plugs.

Board-Mounted Plug-On Boards

Remove and replace the plug-on boards as follows:

1. Disconnect the power source from the 7854 Mainframe.

2. Remove the power-supply unit (see Power-Supply Unit Removal) as necessary to gain access to the boards mounted on the rear of the A11-Main Interface board.

3. Disconnect any end-lead coaxial connectors located on the front of the board, or those which pass across a portion of the board.

4. Loosen all of the board's securing screws.

5. Keeping the board parallel to the A11-Main Interface board, gently pull out on the edges of the board until the feed-thru terminals are cleared.

6. To replace a plug-on circuit board, position the board parallel to the A11-Main Interface board so that all feed-thru pins are properly aligned with their sockets.

7. Gently press the circuit board against the mounting surface. Be sure that all feed-thru pins and sockets mate properly.

8. Uniformly tighten the securing screws (recommended torque: four to six inch-pounds).

A2-Mode Switch Circuit Board

Remove or replace the A2-Mode Switch circuit board as follows:

CAUTION

Do not allow solder or solder flux to flow under printed circuit board switches. The printed circuit board is part of the switch contacts, and intermittent switch operation can occur if contaminated.

http://manoman.sghill.com

1. Separate the Display Unit from the Acquisition Unit as previously described under Display Unit Kickstand. (Fig. 3-12)

2. Remove the VERT TRACE SEPARATION (B) knob.

3. Disconnect the pin connectors and remove the 5 screws holding the board to the chassis.

NOTE

When removing wires from a circuit board, always tag the wire and the corresponding connection point on the circuit board.

4. Slide the board toward the rear of the instrument until the front-panel pushbuttons clear the chassis.

5. Lift the board from the instrument.

6. Replace the board by reversing the order of removal. Match the index arrow on the pin connectors to the corresponding arrow on the board.

A11-Main Interface Circuit Board

Remove and replace the A11-Main Interface circuit board as follows:

1. Remove the plug-in units and the power-supply unit (see Power-Supply Unit Removal).

2. Disconnect all connectors from the A11-Main Interface board. Note the location of the connectors so they can be correctly replaced.

3. Remove the screws from inside each plug-in compartment which hold the plug-in interface connectors to the chassis (see Fig. 3-14). Also remove the screws which hold the ground straps to the chassis.

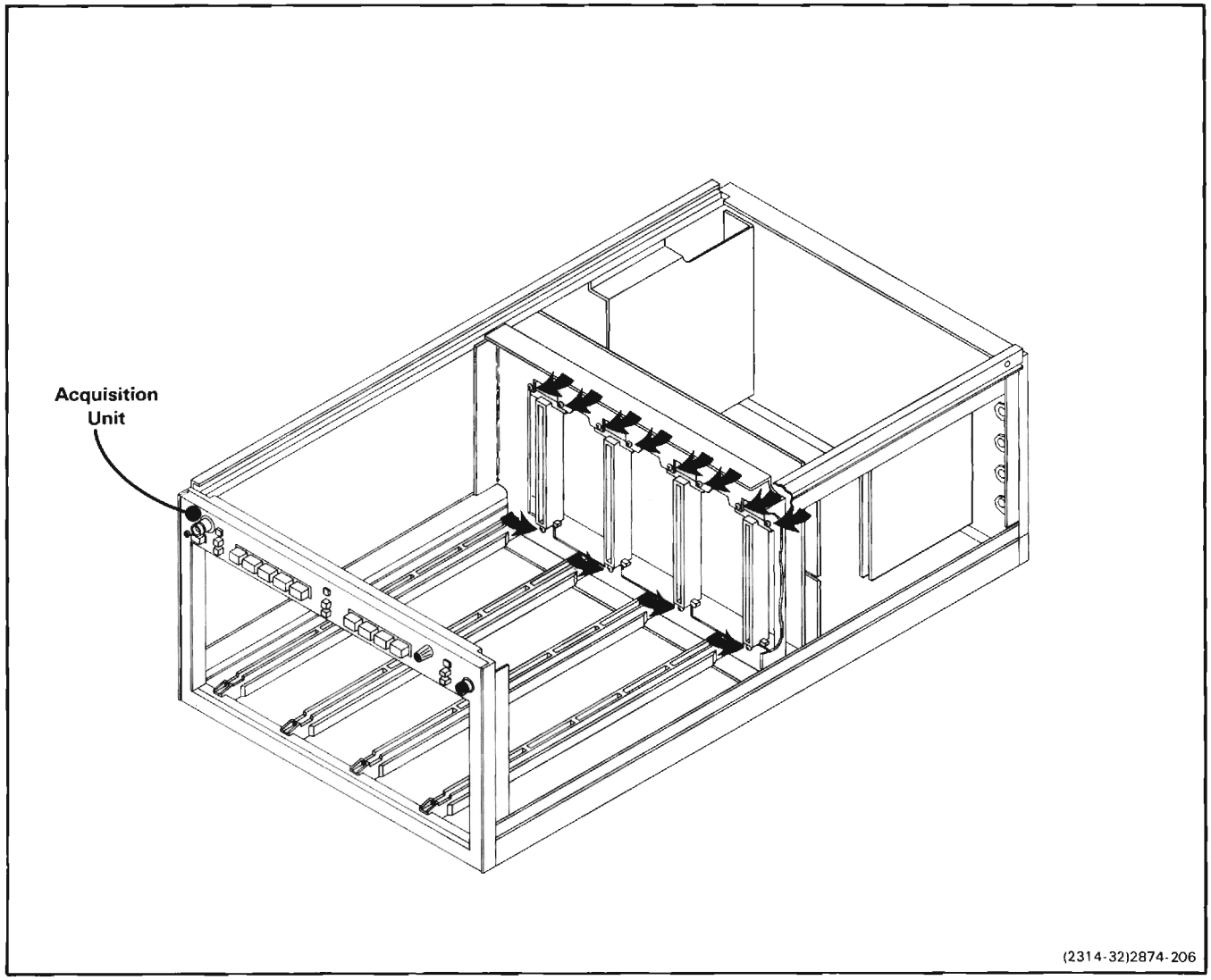

Figure 3-14. Location of securing screws used for A11-Main Interface board removal.

http://manoman.sqhill.com

4. Slide the Main Interface board assembly to the rear of the instrument and remove it.

5. Replace the A11-Main Interface circuit board in the reverse order of removal. Match the index arrow on the pin connectors to the corresponding arrow on the board.

A12-Control Rectifier Circuit Board

An exploded-view drawing of the power-supply unit is given in Section 8, Replaceable Mechanical Parts, at the rear of this manual. To remove the A12-Control Rectifier board, use the following procedure:

1. Slide the power-supply unit out of the instrument (see Power-Supply Unit Removal).

2. Remove the A25-Low-Voltage Regulator board with attached chassis as described under A25-Low-Voltage Regulator Board.

3. Remove the 4 screws securing the power transformer to the bracket.

4. Remove the protective cover from the power-supply unit (see Access to Components in the Power-Supply Unit).

5. Disconnect the multi-pin connectors, from the A12-Control Rectifier board. Note the location of the pin connectors so they can be correctly replaced.

6. Remove the 2 plastic screws which hold the circuit-board shield to the A23-Inverter board.

7. Unsolder the 3 power-transformer leads from the A23-Inverter board. Remove the excess solder from the board pads with a vacuum-type desoldering tool.

8. Remove the 5 securing screws from the A12-Control Rectifier board.

9. Lift the circuit board and attached power transformer from the instrument.

10. To replace the A12-Control Rectifier board, reverse the order of removal. Match the index arrow on the pin connectors to the corresponding arrow on the board.

A16-Fan Motor Circuit Board

The exhaust fan and A16-Fan Motor circuit board are removed as a unit. Remove and replace the Fan assembly as follows:

1. Disconnect the pin connecter (P80) from the board.

2. Remove the screw that secures the board to the spacer post.

3. Remove the 2 screws from the motor retaining strap, then remove the fan motor and board assembly.

4. To replace the Fan assembly, reverse the removal procedure.

A23-Inverter Circuit Board

An exploded-view drawing of the power-supply unit is given in Section 8, Replaceable Mechanical Parts, at the rear of this manual. Remove and replace the power-supply A23-Inverter board as follows:

WARNING

The power-supply unit has been tested at the factory to ensure safe operation. Improper repair of this unit can result in hazardous potentials on the instrument chassis. Do not remove the plate insulator, block insulator, or transistor shield from the heatsink. (See the exploded-view drawing of the power-supply unit for the location of the components.)

1. Slide the power-supply unit out of the instrument (see Power-Supply Unit Removal).

2. Remove the protective cover from the power-supply unit (see Access to Components in Power-Supply Unit).

3. Remove A12-Control Rectifier board using the previous procedure.

4. Remove the 3 securing screws from A23-Inverter board.

5. Unsolder the line-input leads from the circuit board. Remove the excess solder from these circuit board pads with a vacuum-type desoldering tool.

6. Remove the two metal-cased power transistors by removing the securing nuts and pulling the transistors from their sockets.

7. Move the A23-Inverter board away from the heatsink shield until the transistor mounting studs clear the heatsink shield. Remove the board from the power-supply unit.

8. To replace the A23-Inverter board, reverse the order of removal. Match the index arrow on the pin connectors to the corresponding arrow on the board.

A22-Low-Voltage Regulator Circuit Board

Remove and replace the A22-Low-Voltage Regulator circuit board as follows:

1. Slide the power-supply unit out of the instrument (see Power-Supply Unit Removal).

http://manoman.sqhill.com

2. Disconnect the multi-pin connectors from the board (two of the multi-pin connectors are self-locking; see the discussion on Multi-Pin Connectors in this section). Note the location of the pin connectors so they may be correctly replaced.

NOTE

If the A25-Low-Voltage Regulator board is to be removed to allow access to other parts of the power-supply unit, proceed with steps 3 and 4 only. If the board is to be removed from the instrument, proceed with the remaining steps of the procedure.

3. Remove the 2 screws located in the access holes under the A25-Low-Voltage Regulator board. These screws secure the chassis.

4. Remove the 3 screws securing the Low-Voltage Regulator chassis to the rear heatsink. Remove the board with attached chassis.

5. Remove the mounting hardware securing the plastic-cased power transistors to the rear heatsink (see Fig. 3-15). Note the position of the lockwashers so they can be correctly replaced.

6. Remove the 5 securing screws and lift the board with attached power transistors from the chassis.

7. To replace the A22-Low Voltage Regulator board, first apply a thin coat of silicone grease to the back (mounting surface) of each power transistor.

WARNING

Handle silicone grease with care. Avoid getting silicone grease in your eyes. Wash hands thoroughly after use.

8. Place the A22-Low Voltage Regulator board on the chasis. Replace, but do not tighten, the securing screws.

9. Check that the power transistors are aligned with their mounting screws and that the insulating washers are in place between the transistor cases and the rear heatsink.

10. Secure the transistors with the mounting hardware. Do not over-tighten the nuts; recommended torque is four to six inch-pounds.

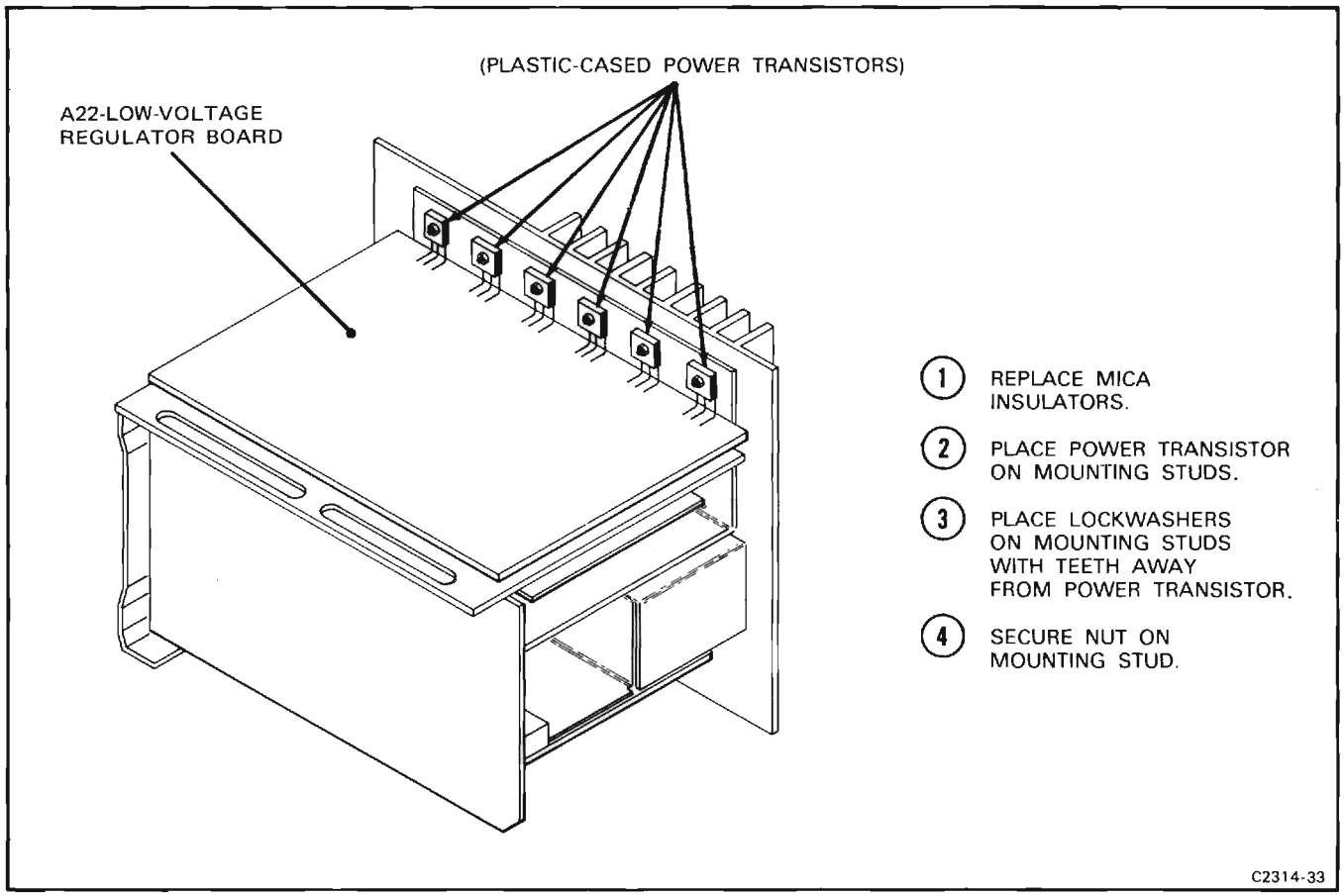

Figure 3-15. Correct placement of power transistor and mounting hardware in rear heatsink.

http://manoman.sqhill.com

11. Tighten the screws holding the A22-Low Voltage Regulator board to the chasis.

12. Install the chassis on the power-supply unit.

13. Connect the multi-pin connectors to the board. Match the index arrow on the pin connectors to the corresponding arrow on the board.

14. Install the power-supply unit in the instrument.

A34, A35-Follower Circuit Boards

Follower circuit boards with six interface contacts are used in the plug-in interface connectors to provide optimum signal connections between the Vertical Mode plug-in units and the 7854 Interface board. Each Follower board is held in place by a spring so that the board can move back and forth within the interface connector to compensate for length differences between plug-in units. If a contact on a Follower board is damaged, the entire board with contacts and interconnecting cables is replaced as a unit.

Remove a Follower circuit board as follows:

1. Disconnect the instrument from the power source and remove any plug-in units.

2. Remove the power supply unit (see Power Supply Unit Removal).

3. Remove the appropriate metal shield in front of the A11-Main Interface board.

4. Disconnect the coaxial leads of the Follower board from the A19-Vertical Channel Switch board and the A13-Trigger Amplifier board. Note the location of the connectors so they may be correctly replaced.

5. Using long-nose pliers, disengage the spring from the Follower board (spring is in front of the A11-Main Interface board).

6. Remove the Follower board with interconnecting cables from the rear of the interface connector, through the hole in the A11-Main Interface board.

To replace a Follower circuit board, a folded length of very thin shim stock as wide as the Follower board is required to compress the contacts while the board is inserted into the interface connector. Proceed as follows:

1. Hold the Follower board between the ends of the shim stock with the fold directly in front of the contacts. With the shim stock held against the sides of the board, the contacts on the sides of the board should be pressed together.

2. Insert the folded end of the shim stock (with the Follower board) into the rear of the interface connector through the hole in the A11-Main Interface board. When the Follower board contacts are almost fully inserted into the connector, hold the board in place and remove the shim stock through the front of the interface connector while fully inserting the Follower board.

3. Secure the Follower board with the spring.

4. Reconnect the Follower board coaxial leads to the A19-Vertical Channel Switch and the A13-Trigger Amplifier board.

5. Replace the power supply unit.

6. Replace the metal shields.

A36—Calculator Keyboard Electronics Board Removal

1. Remove the right side cover of the calculator (2 screws).

2. Locate and disconnect the ground connection to the Calculator Button board.

3. Slide the front panel approximately 1/4 inch to the right then pull up.

4. Disconnect the pin connector, P208 from the Calculator Button board.

5. Remove two screws and pull up on the Calculator Keyboard Electronics board until the interboard connectors, P200, P300, P305 disengage.

6. To replace the board, reverse the removal procedure.

A37—Calculator Button Board Removal

1. Follow the procedure for the Keyboard Electronics Board removal then proceed with the following instructions.

2. Locate and remove 9 nuts and 2 spacer posts.

3. Separate the board and the front panel.

Calculator Button Board Replacement

1. Follow the procedure for the Keyboard Electronics Board removal then proceed with the following instructions.

2. Align the pushbuttons and the 2 indicator lamps with the appropriate holes in the front-panel.

3. Install 9 nuts and 2 spacer posts.

http://manoman.sqhill.com

4. Align the Keyboard Electronics Board with the interboard connectors, P200, P300, P305, and press down until they are fully engaged.

5. Install and tighten 2 screws.

6. Plug in the pin connector P208.

7. Place the front-panel with boards attached into the appropriate grooves in the frame section.

8. Slide the front-panel to the left until fully engaged into the left side cover.

9. Reconnect the ground wire (Calculator Button Board ground).

10. Install the right side cover and secure with 2 screws.

PLUG-IN INTERFACE CONNECTORS

The individual contacts of the plug-in interface connectors can be replaced. However, we recommend replacing the entire A11-Main Interface board if a large number of the contacts are damaged. An alternative solution is to refer the maintenance of the damaged A11-Main Interface board to your local Tektronix Field Office. Use the following procedure to remove and replace an individual contact of the plug-in interface connectors:

NOTE

The plug-in interface contacts which are mounted on the Follower circuit boards cannot be replaced. A Follower board with contacts and interconnecting cables is replaced as a unit. See A34, A35-Display Follower board removal procedure.

1. Remove the A11-Main Interface circuit board from the instrument as previously described.

2. Snap the white plastic connector cover off the side of the damaged plug-in interface connector.

3. Unsolder and remove the damaged contact.

4. Install the replacement contact. Carefully position it to fit against the connector body.

5. Snap the white plastic connector cover back onto the plug-in interface connector. Check that the replaced contact is aligned with the other contacts.

6. Replace the A11-Main Interface board.

SEMICONDUCTORS

Semiconductors should not be replaced unless actually defective. If removed from their sockets during routine maintenance, return them to their original sockets. Unnecessary replacement of semiconductors may affect the adjustment of the instrument. When semiconductors are replaced, check the operation of circuits which may be affected.

WARNING

To avoid electric shock hazard, always disconnect the 7854 from the power source before removing or replacing components.

Replacement semiconductors should be of the original type or a direct replacement. Lead configurations of the semiconductors used in this instrument are shown in Figure 3-2. Some plastic case transistors have lead configurations which do not agree with those shown. If a replacement transistor is made by a different manufacturer than the original, check the manufacturer's basing diagram for correct basing. All transistor sockets in this instrument are wired for standard basing as used for metal-cased transistors. Transistors which have heat radiators or are mounted on the chassis use silicone grease to increase heat transfer. Replace the silicone grease on both sides of the insulating washer when replacing these transistors.

WARNING

Handle silicone grease with care. Avoid getting the silicone grease in your eyes. Wash hands thoroughly after use.

To replace one of the power transistors mounted on the heatsink at the rear of the power-supply unit, first remove the mounting hardware. Then, unsolder and remove the defective transistor. When replacing the transistor, be sure to install the insulating washer between the transistor and the heatsink (use silicone grease as previously described). Tighten the mounting nut just tight enough to hold the transistor in place. Then solder the replacement transistor to the A25-Low-Voltage Regulator board.

An extracting tool should be used to remove the in-line integrated circuits to prevent damaging the pins. This tool is available from Tektronix, Inc.; order Tektronix Part 003-0619-00. If an extracting tool is not available, use care to avoid damaging the pins. Pull slowly and evenly on both ends of the integrated circuit. Try to avoid one end disengaging from the socket before the other end.

Vertical Amplifier Replacement

Replace Vertical U50 as follows:

http://manoman.sqhill.com

1. Remove the Left side cover to expose the A18-Vertical Amplifier board.

2. Pivot the plastic retaining bar away.

3. With an extracting tool (the one mentioned in the previous discussion may be used) pull up until the IC clears the socket.

Replace Vertical Amplifier U150 as follows:

1. Remove the A18-Vertical Amplifier (follow the procedure for chassis mounted board removal).

2. Unsolder the crt neck pin connectors from the defective IC and solder them to the replacement IC.

3. Remove the securing hardware.

If the code number (see Fig. 3-16) of the replacement IC does not match that of the defective IC, the shunt resistance must be changed. See Table 3-5 for shunt resistor values. See Test Point and Adjustment Locations foldout in Section 7 to identify selectable components mentioned here.

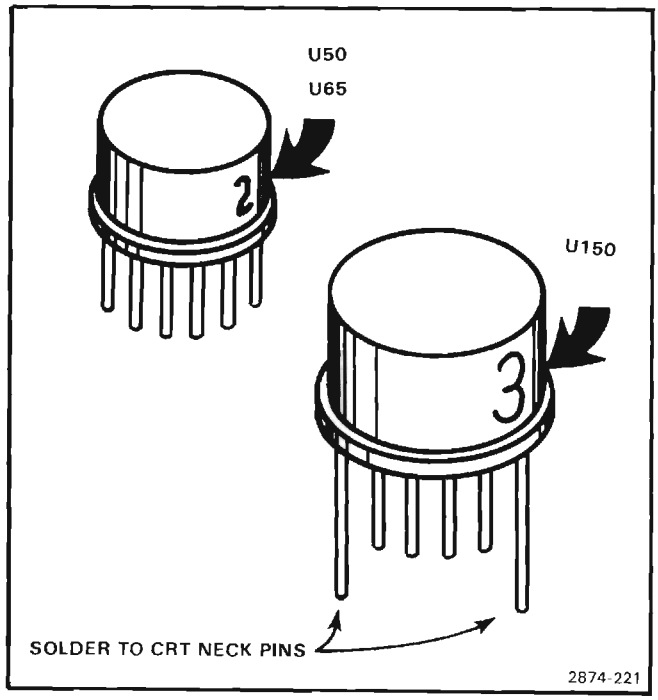

Figure 3-16. IC code number locations.

TABLE 3-5
IC Code/Shunt Resistor Replacement Values

IC Code (See Fig. 3-16)	Circuit Board		
	A18 Vertical Amplifier		A25 Digitizer
	U50 R43,R47 (Ohms)	U150 R143,R173 (Ohms)	U65 R43,R63 (Ohms)
1	91	110	160
2	100	130	200
3	110	160	240
4	130	220	330
5	160	300	470
6	220	510	1000
7	300	1000	
8	510		

http://manoman.sqhill.com

Hypcon Connectors

The hypcon (hybrid-printed connector) connector is a precision-made connector designed to provide low loss electrical and/or thermally efficient connection between the printed circuit board and hybrid integrated circuit. An exploded view of the Hypcon connector is shown in Figure 3-17. Care must be taken when replacing the hybrid IC's not to touch the elastomer gold-plated contacts with the fingers or to use a cleaner which will degrade contact reliability. The Hypcon connector and hybrid IC should be removed if it becomes necessary to use a cleaning solvent near the connector when replacing adjacent (within 1/2") circuit board components. IMPORTANT: Remove all traces of solder flux or foreign material contamination from the circuit board contact area before replacing the connector. Contamination usually takes place during the soldering and cleaning process. Even when the soldering is done carefully, flux, oil, or other contaminants can be carried under the connector during the cleaning operation. When the solvent evaporates, nonconductive contaminants may remain on or near the contact interfaces.

The cleaning process (either hand cleaning with a solvent or machine cleaning in an automatic detergent wash) is not recommended for boards containing Hypcon connectors.

If a component adjacent to a Hypcon connector must be replaced, the following steps are recommended:

1. Remove the hybrid IC and Hypcon connector (see Disassembly and Removal instructions) before any soldering or cleaning and store in a dirt-free covered container. When several hybrids and Hypcon connectors are to be removed, keeps part together and replace as sets; do not interchange parts.

2. Hand soldering:

   a. Use small diameter solder (0.030"-0.040").

   b. Use low wattage soldering irons (15-20 watts).

   c. Use care with solder amount and placement.

3. Remove solder flux and contact contamination with isopropyl alcohol, denatured ethyl alcohol, or a Freon TF cleaner.

4. Flush the hybrid and Hypcon connector mounting area with isopropyl alcohol. Do not scrub with a cotton-tipped applicator, as cotton fibers will adhere to edges and surfaces of contact areas and cause open or intermittent connections. The elastomer should be examined under light for dust, hair, etc., before it is re-installed. If the etched circuit board surfaces require more cleaning, scrub with a soft rubber eraser and blow or vacuum clean while dusting surface with a small clean brush.

5. If the hybrid IC and elastomer contact holder are contaminated, clean the contact holder and hybrid by flushing or spraying with alcohol and oven dry at 50° C. Do not scrub with a cotton-tipped applicator or similar device. If the contact holder is excessively contaminated, replace it with a new one.

Two inch-pounds of torque should be applied to the mounting screws to secure the Hypcon to the circuit board.

Make sure that the elastomer is properly seated in the contact holder before remounting the assembly to the circuit board. Exercise care when mounting the frame, elastomer-contact-holder, hybrid IC assembly to the circuit board to prevent misalignment between the connector and board.

CAUTION

Because of close tolerances involved, special care must be taken to assure correct index alignment of each Hypcon part during reassembly. Failure to do so can result in a cracked hybrid substrate. See Figure 3-17 for index locations.

If your instrument contains both the flush and stepped type of Hypcon connectors, be careful not to mix the elastomer contact holders during reassembly. The flush Hypcon connectors have green elastomer contact holders and the plastic frame is marked FLUSH. The stepped Hypcons have neutral-colored elastomer contact holders with a slight ridge or step on the contact surface; the large frames are marked STEPPED. The registration pins on the stepped plastic frame are slightly longer than those on the flush frame. The elastomer contact holder in the small stepped connectors is indexed differently than the large connectors. Look for a small gold arrow in one corner of the holder instead of a flat corner. Match this corner arrow with the pointed corner of the plastic frame. Give close attention to this indexing, as it is easy to insert the elastomer contact holder incorrectly.

Differences also exist between the large flush and large stepped Hypcon circuit board receptacles. Figure 3-17 shows the cross-sectional differences which must be observed when working with an instrument that contains both types of Hypcon connectors.

CAUTION

Damage to the elastomer contact holder can result if the connectors are not mated properly with the board receptacle.

When replacing the hybrid, insert it into the board opening and then position the Hypcon connector in the board registration holes for perfect alignment. The outer portion of the hypcon frame should be flush with the circuit board before the four mounting screws are tightened. Avoid touching the hybrid and elastomer contact holder with your fingers; finger oils can degrade reliability.

A procedure for removal and replacement is included in Figure 3-17.

http://manoman.sqhill.com

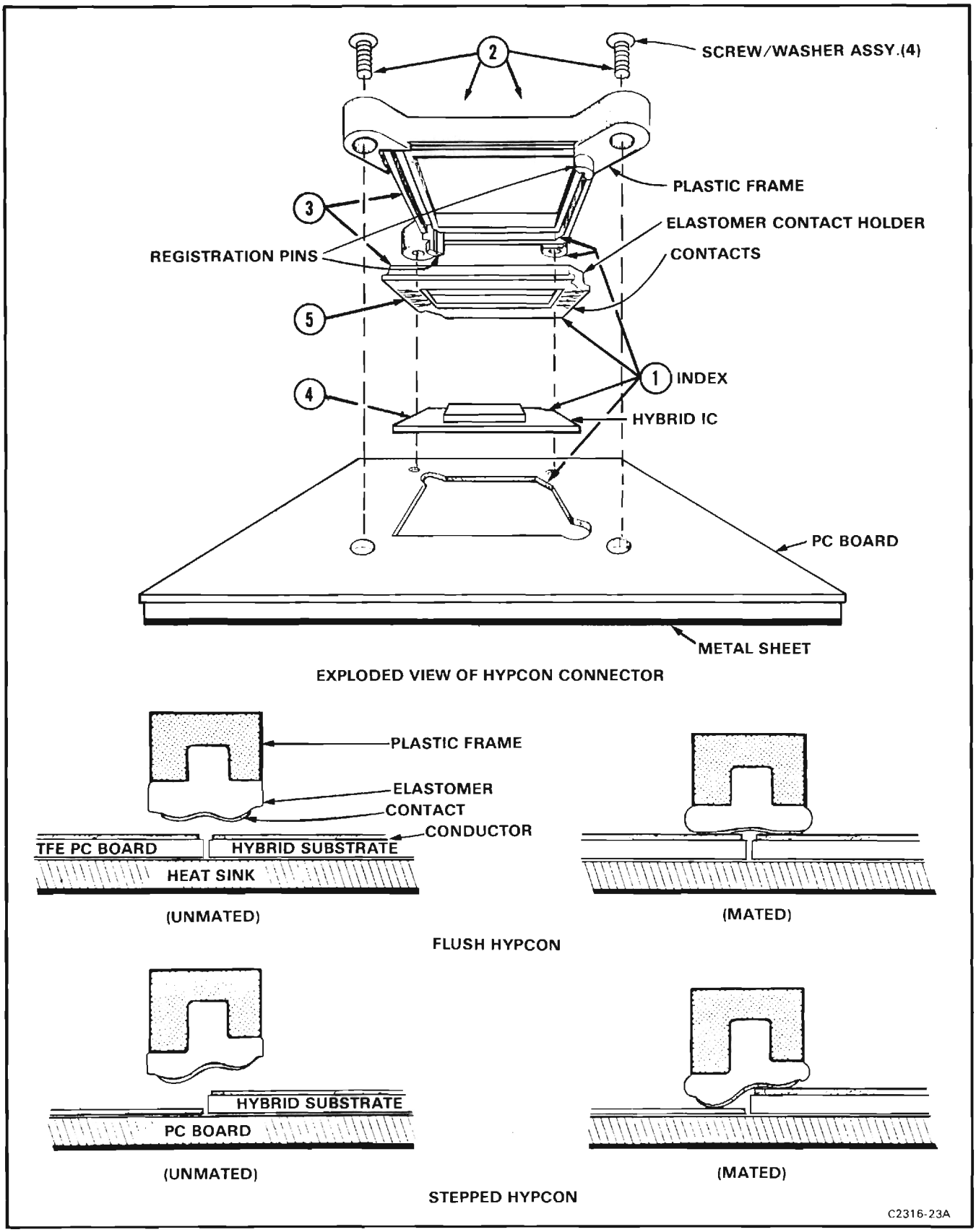

Figure 3-17. Hypcon assembly removal and replacement.

http://manoman.sqhill.com

DISASSEMBLY AND REMOVAL

1. Note index on circuit board (arrow) and Hypcon plastic frame (pointed mounting ear).

2. Unscrew and remove the 4 screw/washer assemblies.

3. Lift Hypcon connector from board.

4. Note index location of hybrid and remove from board with tweezers.

5. Note index location of elastomer contact holder and remove by grasping a corner of the contact holder with tweezers and lifting up. Do not touch the gold-plated contacts with your fingers.

REASSEMBLY AND REPLACEMENT

Grasp corner of elastomer contact holder with tweezers and place in plastic frame slot being careful to match the flat contact holder with the flat frame corner. Place a clean plastic envelope over finger and press with finger to seat contact holder into the frame. The contact holder must be evenly seated on all four sides.

Flush Hypcon: Match hybrid flat corner with board receptacle flat corner and place hybrid in receptacle. Match pointed mounting ear of Hypcon connector with flat corner of receptacle and guide registration pins into the board holes.

Stepped Hypcon: Using tweezers, match the hybrid corner index with the elastomer contact holder index and insert between the registration pins. Turn the assembly over, grasp the hybrid "hat" with the tweezers, and guide the registration pins into the board holes. Match the plastic frame pointed mounting ear with the circuit board arrow.

Insert mounting hardware and apply 2 inch-pounds of torque to secure the connector assembly.

C2316-23B

Figure 3-17. Hypcon assembly removal and replacement (Cont.).

http://manoman.sqhill.com

Hybrid substrate contact numbers 1 and 20 are printed on the substrate at the index corner. See Figure 3-2 Semiconductor lead configurations.

INTERCONNECTING PINS

Two methods of interconnection are used in this instrument to electrically connect the circuit boards with other boards and components. When the interconnection is made with a coaxial cable, a special end-lead connector plugs into a socket on the board. Other interconnections are made with a pin soldered into the board. Two types of mating connectors are used for these interconnecting pins. If the mating connector is mounted on a plug-on circuit board, a special socket is soldered into the board. If the mating connector is on the end of a lead, an end-lead pin connector is used which mates with the interconnecting pin. The following information provides the removal and replacement procedure for the various types of interconnecting methods.

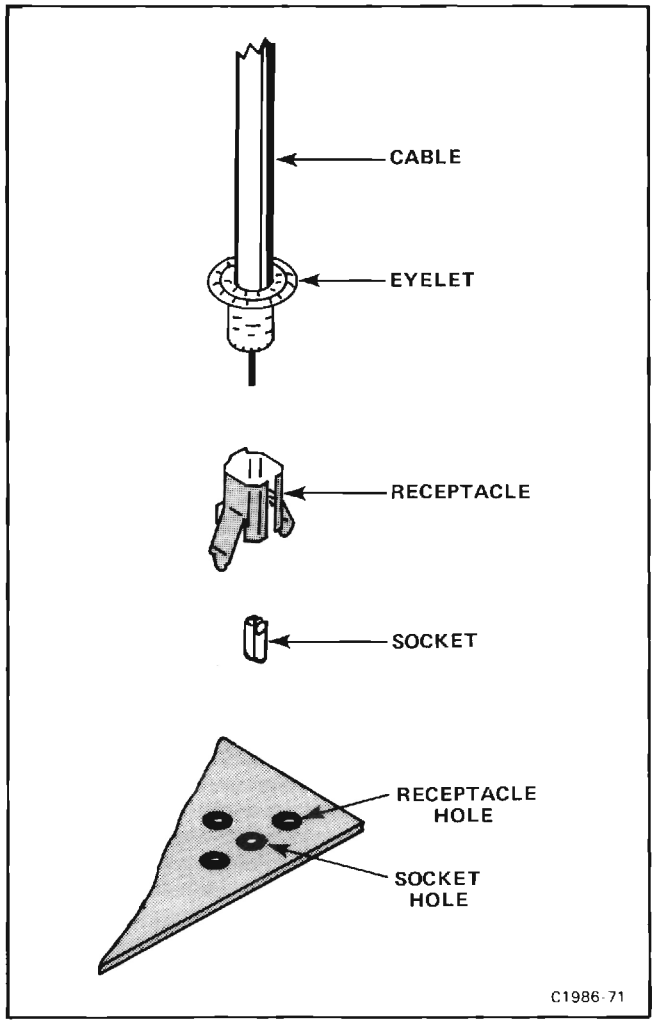

Figure 3-18. Coaxial end-lead connector assembly.

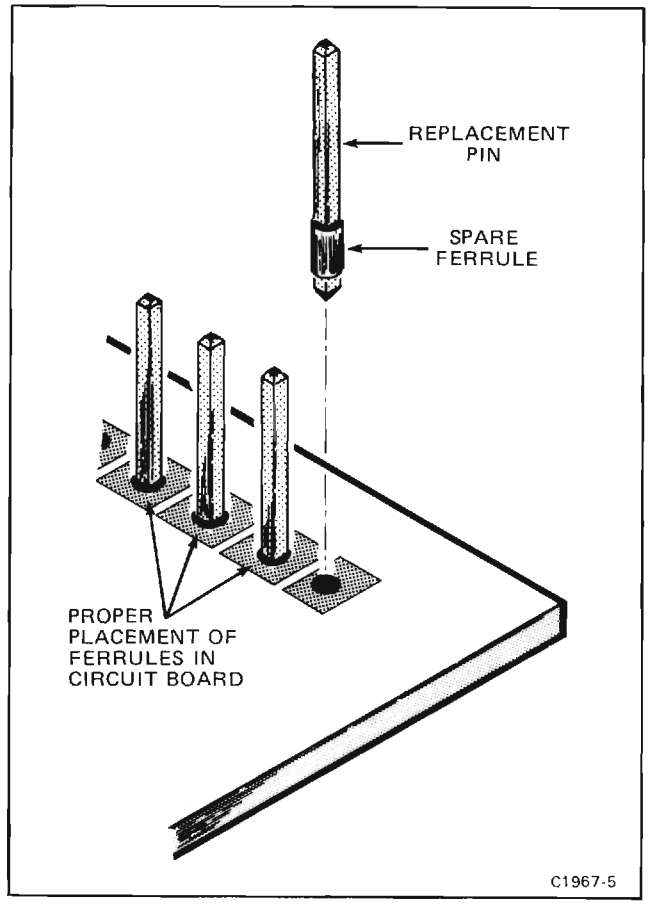

Figure 3-19. Exploded view of circuit board pin and ferrule.

Coaxial-Type End-Lead Connectors

Replacement of the coaxial-type end-lead connectors requires special tools and techniques; only experienced maintenance personnel should attempt to remove or replace these connectors. We recommend that the damaged cable or wiring harness be replaced as a unit. For cable or wiring harness part numbers, see Section 8, Replaceable Mechanical Parts. An alternative solution is to refer the replacement of the defective connector to your local Tektronix Field Office or representative. Figure 3-18 gives an exploded view of a coaxial end-lead connector assembly.

Circuit-Board Pins

A circuit-board pin replacement kit (including necessary tools, instructions, and replacement pins with attached ferrules) is available from Tektronix, Inc. Order Tektronix Part 040-0542-00. Replacing circuit-board pins on multi-layer boards is not recommended. (The multi-layer boards in this instrument are listed under Soldering Techniques in this section.)

To replace a damaged pin, first disconnect any pin connectors. Then remove the solder from the connection using a vacuum desoldering tool. See Soldering Techniques. Remove the damaged pin from the board

http://manoman.sqhill.com

with a pair of pliers, leaving the ferrule (see Fig. 3-19) in the circuit board if possible. If the ferrule remains in the circuit board, remove the spare ferrule from the replacement pin and press the new pin into the hole in the circuit board. If the ferrule is removed with the damaged pin, then press the replacement pin, with attached spare ferrule, into the circuit board. Position the replacement pin in the same manner as the original. Solder the pin to the circuit board on each side of the board. If the original pin was bent at an angle to mate with a connector, carefully bend the new pin to the same angle. Replace the pin connector.

Circuit-Board Pin Sockets

The pin sockets on the circuit boards are soldered to the back of the board. To remove or replace one of these sockets, first unsolder the pin (use a vacuum-type desoldering tool to remove excess solder). Then straighten the tabs on the socket and remove the socket from the board. Place the new socket in the circuit board hole and press the tabs down against the board. Solder the tabs of the socket to the circuit board; be careful not to get solder inside the socket.

NOTE

The spring tension of the pin sockets ensures a good connection between the circuit board and the pin. This spring tension can be destroyed by using the pin sockets as a connecting point for spring-loaded probe tips, alligator clips, etc.

Multi-Pin Connectors

The pin connectors used to connect the wires to the interconnecting pins are clamped to the ends of the associated leads. To remove or replace damaged multi-pin connectors, remove the old pin connector from the end of the lead and clamp the replacement connector to the lead.

NOTE

Some multi-pin connectors are equipped with a special locking mechanism. These connectors cannot be removed by pulling on the wire(s). To remove the connectors from the pin(s) grasp the plastic holder and pull.

To remove an individual wire from the holder insert a scribe in the hole on the side of the holder and slide the extended portion under the holder. This will allow the wire to be removed from the holder.

Some of the pin connectors are grouped together and mounted in a plastic holder; the overall result is that these connectors are removed and installed as a multi-pin connector (see Troubleshooting Aids). If the individual end-lead pin connectors are removed from the plastic holder, note the order of the individual wires for correct replacement in the holder.

PUSHBUTTON SWITCHES

The pushbutton switches used on the 7854 Oscilloscope mainframe are circuit board mounted. First remove the associated circuit board following the procedure given under Circuit Boards in this section. Figure 3-20 gives removal and replacement instructions for the pushbutton switches. (A Trigger Source, B Trigger Source and Calibrator).

GRATICULE LIGHT BULBS

To remove or replace the graticule light bulbs, first remove the crt frame mask, light filter, and scale mask. Pull on the white tabs to remove the graticule lamp assembly. Next, slide the retaining strip off to the side of the damaged bulb base. Pull the bulb out of the circuit board. Reverse the order of removal for replacement.

POWER TRANSFORMER

Replace the power transformer only with a direct replacement Tektronix transformer. Remove and replace the power transformer as follows:

1. Remove the A12-Control Rectifier board as described under Circuit Boards in this section.

2. Remove the bracket which holds the transformer to the rear heatsink.

3. Unsolder the transformer leads from the circuit boards. Remove the excess solder from the circuit-board pads (see Soldering Techniques). Note the position of the transformer leads so they may be correctly replaced.

4. Place the new transformer in position but do not yet solder the leads to the circuit-board pads.

5. Secure the bracket to the A12-Control Rectifier board and attach the transformer to the bracket with the 4 securing screws.

6. Reposition the A12-Control Rectifier board and secure with 3 screws. Attach the bracket securely to the rear heatsink.

7. Solder the transformer leads to the circuit-board pads.

8. Continue replacing the A12-Control Rectifier board.

The line fuse used in this instrument is located on the rear panel of the power-supply unit. Replace the line fuse (F10) only with one of proper type and rating.

NOTE

The line voltage fuse F10 is used for both 110 volt and 220 volt operation. No change in the fuse is necessary when switching the LINE VOLTAGE SELECTOR switch between 110 volts and 220 volts.

ADJUSTMENT AFTER REPAIR

After any electrical component has been replaced, the adjustment of that particular circuit should be checked, as well as the adjustment of any closely related circuits. Since the low-voltage supplies affect all circuits, adjustment of the entire instrument should be checked if component replacements have been made in these supplies or if the power transformer has been replaced. See section 4 for a complete adjustment procedure.

http://manoman.sqhill.com

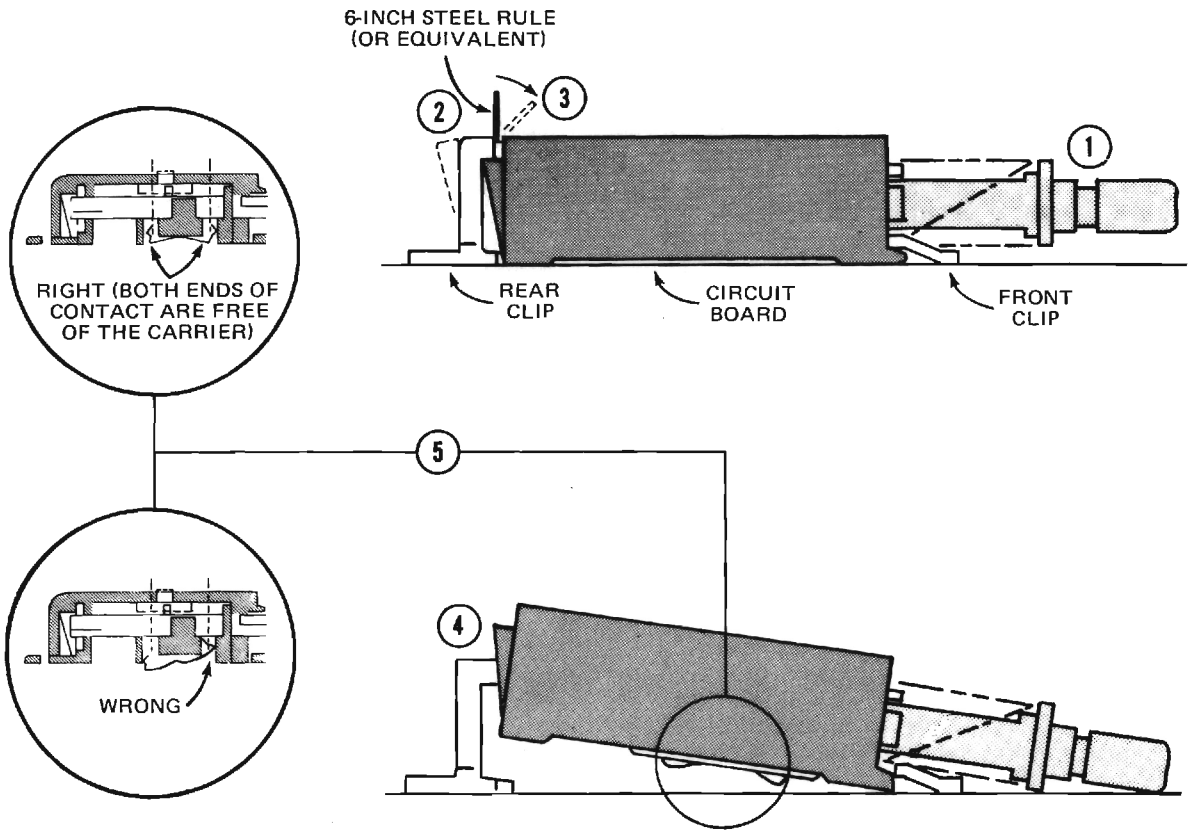

(1) Make sure that all switch shafts are in the OUT position to clear the rear clip.

(2) Place the long edge of a six-inch rule or similar thin straight edge between the top edge of the rear clip and the switch body.

(3) Carefully pry the rear clip back just far enough to push the steel rule down between the clip and switch body.

CAUTION

When the switch is removed, the contacts may drop free and be damaged or lost. Body salts or acids can contaminate the switch contacts. Wear cotton gloves to prevent touching the contacts in the switch or on the board with bare hands.

(4) Pull the rear of the switch up, remove the steel rule, and pull the switch out of the front clip.

(5) To replace the switch, first check that the slide contacts are properly installed in the carrier. Then, place the front of the switch into the front clip and push the rear of the switch down until the rear clip catches and holds the switch in place.

C1967-3

Figure 3-20. Correct procedure for pushbutton switch removal and replacement.

http://manoman.sqhill.com

CALIBRATION

This section provides procedures for calibrating the 7854 Oscilloscope. These procedures are designed to compare the performance of this instrument with measurement instruments of known accuracy to detect, correlate, or eliminate by adjustment, any variation from the electrical specifications. These procedures also verify that the controls function properly.

This section is divided into two parts: Part I—Performance Check is provided for those who wish to verify that this instrument meets the applicable electrical specifications in Table 4-2, Performance Check Summary, without making internal adjustments. Part II—Adjustment and Performance Check provides a complete calibration procedure that includes adjustments and performance checks in addition to verifying that the controls function properly. The procedures in Part I and Part II are written so that the entire instrument, or any major circuit or part of a circuit, can be checked or adjusted.

Table 4-1, Calibration Procedure Electives, lists the choices available and instructions for performing complete or partial calibration procedures. Also refer to page 4-2, Using These Procedures, for more detailed information.

TABLE 4-1
Calibration Procedure Electives

Electives	Procedures
Functional Check	1. A functional check only is provided in the checkout procedure in the Operators Manual. 2. Also, a functional check is accomplished by performing Part II—Adjustment and Performance Check.
Performance Check Only	Perform Part I—Performance Check.
Complete Calibration	Perform Part II—Adjustment and Performance Check.
Partial Procedures	Proceed to the desired step(s) (e.g., A2, A3, B2, B3, etc.; as listed in the index to Part I—Performance Check or Index to Part II—Adjustment and Performance Check). **NOTE** *When adjustments are made, we recommend that the entire, major functional circuit procedure be performed.*

http://manoman.sqhill.com

USING THESE PROCEDURES

NOTE

In these procedures, capital letters are used within the body of the text to identify front-panel controls, indicators, and connectors on the 7854 (e.g., A INTENSITY). Initial capitalization is used to identify all the associated test equipment and their controls, indicators, and connectors (e.g., Amplitude) used in the procedures. Initial capitalization is also used to identify internal adjustments (e.g., Hor Pos).

These procedures are divided into subsections by major functional circuits (e.g., A. Power Supply, B. Z-Axis and Display, etc.). The order in which the subsections and procedures appear is the recommended sequence for a complete performance check or calibration of the instrument.

The first step in each subsection (A1, B1, C1, etc.) contains reference information and control settings that must be performed before proceeding with any of the other steps of that subsection.

Setup conditions provide equipment connection information and control settings for both the 7854 Oscilloscope and any associated test equipment. The Setup Conditions are written so that, if desired, each subsection (A, B, C, etc.) or step (A2, A3, B2, B3, etc.) can be performed independently.

The terms CHECK, EXAMINE, ADJUST, or INTERACTION when used as the first word of an instruction or heading are defined as follows:

1. **CHECK**—indicates the instruction accomplishes an electrical specification check. Each electrical specification checked is listed in Table 4-2, Performance Check Summary (see Performance Check Summary discussion for more information).

2. **EXAMINE**—usually precedes an ADJUST instruction and indicates that the instruction determines whether adjustment is necessary. If no ADJUST instruction appears in the same step, the EXAMINE instruction concerns measurement limits that do not have a related adjustment. Measurement limits following the word EXAMINE are not be be interpreted as electrical specifications. They are provided as indicators of a properly functioning instrument and to aid in the adjustment process.

3. **ADJUST**—describes which adjustment to make and the desired result. We recommend that adjustments not be made if a previous CHECK or EXAMINE instruction indicates that no adjustment is necessary.

4. **INTERACTION**—indicates that the adjustment described in the preceding instruction interacts with other circuits. The nature of the interaction is described and reference is made to the step(s) affected.

PERFORMANCE CHECK SUMMARY

Table 4-2, Performance Check Summary, lists the electrical specifications that are checked in Part I and Part II of this section. Table 4-2 is intended to provide a convenient means for locating the procedures in Part I and Part II that check and/or adjust the instrument to meet the applicable electrical specifications. For example: if the Trigger Amplifier had been repaired, use Table 4-2 to locate the electrical specifications affected by the repair. Then, note the title of the procedure in Part I or Part II in which those specifications are checked and/or adjusted. Use the index provided at the front of Part I and Part II to determine the page number of the desired procedures.

TABLE 4-2
Performance Check Summary

Characteristic	Performance Requirement	Part I Performance Check Procedure Title	Part II Adjustment and Performance Check Procedure Title
REAL-TIME VERTICAL SYSTEM			
Deflection Factor as Checked with 067-0587-02 Calibration Fixture, referenced to 6 Div	Compatible with all 7000-series plug-in units.	Implicity checked in step E2. Check Difference between Vertical Channels.	Implicity checked in step F5. Check/Adjust Vertical Gain.
Difference between Vertical Channels	1%, or less.		

http://manoman.sghill.com

TABLE 4-2 (CONT)
Performance Check Summary

Characteristic	Performance Requirement	Part I Performance Check Procedure Title	Part II Adjustment and Performance Check Procedure Title
REAL-TIME VERTICAL SYSTEM (CONT)			
Deflection Factor (Continued)			
Low Frequency Linearity	0.1 div, or less, compression or expansion of a center-screen 2 div signal repositioned vertically anywhere within the graticule area.	E3. Check Vertical Low-Frequency Linearity	F6. Check Vertical Low-Frequency Linearity
System Bandwidth	Varies with plug-in unit selected. See 7000-Series Oscilloscope Systems Specification in the Operators Manual.	Does not normally require customer verification. Satisfactory operation substantiated at the factory.	
Step Response			
System Rise Time	Varies with plug-in unit selected. See 7000-Series Oscilloscope Systems Specification in the Operators Manual.		
Channel Isolation		E4. Check Vertical Channel Isolation.	F9. Check Vertical Channel Isolation.
All Vertical Modes (Except ADD)	At least 100:1 from dc to 250 MHz; and at least 40:1 from 250 MHz to 475 MHz.		
Delay Line	Permits viewing the leading edge of triggering signal.	Checked throughout procedure where single pulse is displayed on crt.	
Displayed Difference in Signal Delay between Vertical Channels		Does not normally require customer verification. Satisfactory operation substantiated at the factory.	
Externally Triggered	60 ps, or less.		
Internally Triggered	200 ps, or less.		

http://manoman.sqhill.com

TABLE 4-2 (CONT)
Performance Check Summary

Characteristic	Performance Requirement	Part I Performance Check Procedure Title	Part II Adjustment and Performance Check Procedure Title
REAL-TIME HORIZONTAL SYSTEM			
Deflection Factor as Checked with 067-0587-02 Calibration Fixture.	Compatible with all 7000-Series plug-in units.	Does not normally require customer verification. Satisfactory operation substantiated at the factory.	
Difference between Horizontal Channels	1%, or less.	D2. Check Difference Between Horizontal Channels.	E2. Check/Adjust Horizontal Amplifier Gain and Readout Jitter.
Linearity at 1 ms/Div	0.05 div, or less, error at each graticule line after adjusting for no error at the second and tenth graticule lines.	D3. Check 1 ms Linearity and Frequency Timing.	E3. Check/Adjust 1 ms Linearity and High-Frequency Timing.
Fastest Calibrated Sweep Rate	500 ps/div.	D3. Check 1 ms Linearity and High-Frequency Timing.	E3. Check/Adjust 1 ms Linearity and High-Frequency Timing.
Horizontal Bandwidth Referenced at 10 Div	Dc to at least 1 MHz (-3 dB).	Does not normally require customer verification. Satisfactory operation substantiated at the factory.	
Phase Shift between Vertical and Horizontal Systems	2°, or less, from dc to at least 35 kHz.	D4. Check X-Y Phasing.	E4. Check X-Y Phasing.
With Option 02 (B HORIZ Compartment only).	2°, or less, from dc to 1 MHz.	D5. Check X-Y Compensation.	E5. Check/Adjust X-Y Compensation.
DIGITIZER			
Vertical		Does not normally require customer verification. Satisfactory operation substantiated at the factory.	
Acquisition Window	From +5 div above, to -5 div below the center horizontal graticule line.		
Resolution: Stored and Numeric Data Paths	Nominally 0.0098 div.		
Noise: Numeric Data Paths	0.008 div or less, mean value of 100 rms measurements, mainframe only.	F6. Check Vertical Digitizer Numeric Noise.	H13. Check Vertical Digitizer Numeric Noise.

http://manoman.sghill.com

TABLE 4-2 (CONT)
Performance Check Summary

Characterstic	Performance Requirement	Part I Performance Check Procedure Title	Part II Adjustment and Performance Check Procedure Title
DIGITIZER (CONT)			
DC Gain Accuracy as Checked with 067-0587-02 Calibration Fixture, referenced to 6 Div		F4. Check Digitizer Vertical Gain	H8. Check/Adjust Digitizer Vertical Gain.
Stored and Numeric Data Paths	Within 1% at Temperature of calibration.		
Change with Temperature	0.8%, or less, per 10°C.	Does not normally require customer verification. Satisfactory operation substantiated at the factory.	
DC Offset		F2. Check Vertical Sampler Offset.	H4. Check/Adjust Vertical Sampler Offset.
Stored Data Path	Within 0.1 div of graticule center, at temperature of calibration.		
Numeric Data Path	Within 0.1 equivalent graticule div of zero, at temperature of calibration.		
Change with Temperature	0.1 div, or less, per 10°C.	Does not normally require customer verification. Satisfactory operation substantiated at the factory.	
System Bandwidth; Stored and Numeric Data Paths	Varies with plug-in unit selected. See 7000-Series Oscilloscope Systems Specification in the Operators Manual; step response should be same specification limits as given for realtime operation.		
Matching to Real Time	Real time and acquisition system sine-wave amplitude response should match each other to within 1+2.5 (f/100 MHz)%, where 0 ≤f ≤400 MHz, (f in MHz).		

http://manoman.sqhill.com

TABLE 4-2 (CONT)
Performance Check Summary

Characteristic	Performance Requirement	Part I Performance Check Procedure Title	Part II Adjustment and Performance Check Procedure Title
DIGITIZER (CONT)			
System Step Response: Stored and Numeric Data Paths	Varies with plug-in unit selected. See 7000-Series Oscilloscope Systems Specification in the Operators Manual; shall be same specification limits as given for real-time operation.	Does not normally require customer verification. Satisfactory operation substantiated at the factory.	
Horizontal Acquisition Window	From −5 div left, to +5 div right of the center vertical graticule line.		
Resolution: Stored and Numeric Data Paths	Nominally: 0.0098 div at 1024 P/W; 0.0196 div at 512 P/W; 0.0392 div at 256 P/W; 0.0784 div at 128 P/W.		
Noise: Numeric Data Path	0.01 div or less, mean value of 100 rms measurements, mainframe only.	F7. Check Horizontal Digitizer Numeric Noise.	H14. Check Horizontal Digitizer Numeric Noise.
DC Gain Accuracy, as Checked with 067-0587-02 Calibration Fixture, referenced to 6 Div Stored and Numeric Data Path	Within 1% at temperature of Calibration.	F5. Check Digitizer Horizontal Gain	H11. Check/Adjust Digitizer Horizontal Gain.
Change with Temperature	0.4%, or less per 10°C.	Does not normally require customer verification. Satisfactory operation substantiated at the factory.	
DC Offset Stored Data Path	Within 0.1 div of graticule center, at temperature of calibration.	F3. Check Horizontal Sampler Offset.	H5. Check/Adjust Horizontal Sampler Offset.
Numeric Data Path	Within 0.1 equivalent graticule div of zero, at temperature of calibration.		
Change with Temperature	0.1 div, or less, per 10°C.	Does not normally require customer verification. Satisfactory operation substantiated at the factory.	

http://manoman.sghill.com

TABLE 4-2 (CONT)
Performance Check Summary

Characteristic	Performance Requirement	Part I Performance Check Procedure Title	Part II Adjustment and Performance Check Procedure Title
DIGITIZER (CONT)			
DC Offset (Continued)		Does not normally require customer verification. Satisfactory operation substantiated at the factory.	
Equivalent Time Sampling	For proper acquisition, input signals must be repetitive single valued waveforms of the horizontal variable. Processor does not check that these conditions are met.		
Maximum Sweep Speeds for Single-Shot Acquisition with 7B87 Time Base with Pretrigger Acquire clock	P/W: 128, 256, 512, 1024 — Maximum Sweep Speed (μs/div): 50, 100, 200, 500		
CRT SYSTEM			
Graticule		Does not normally require customer verification. Substantiated at the factory.	
Type	Internal; illuminated with variable edge lighting.		
Display Area	8 div vertically by 10 div horizontally.		
Div Unit	1 div = 1 cm.		
Phosphor			
Standard	P31.		
Option 78	P11.		
Photographic Writing speed (With Polaroid 3000 ASA Film, without Film Fogging P-11 Phosphor)		Does not normally require customer verification. Satisfactory operation substantiated at the factory.	
TEKTRONIX C51R Camera, f1.2 Lens and 1:05 Object-to-Image Ratio	At least 2.4 cm/ns. In typical applications, P31 phosphor has approximately one-half the writing speed of P11 phosphor.		

http://manoman.sqhill.com

TABLE 4-2 (CONT)
Performance Check Summary

Characteristic	Performance Requirement	Part I Performance Check Procedure Title	Part II Adjustment and Performance Check Procedure Title
EXTERNAL CONNECTORS			
Camera Power	Front-panel 3-contact connector (on crt bezel) compatible with Tektronix C-50 series cameras.	B7. Check Single Sweep Reset and Camera Connector.	C7. Check Single Sweep Reset and Camera Connector.
Bottom Pin Center Pin Top Pin	Ground. Single-sweep reset. +15 V.		
Calibrator Output	Front-panel bnc connector.	B4. Check Calibrator Amplitude.	C4. Check Calibrator Amplitude.
Wave Shape	Square wave.		
Polarity	Postive-going with baseline at 0V.		
Output Resistance.	450 Ω.	Does not normally require customer verification. Satisfactory operation substantiated at the factory.	
Output Voltage	(Selected by front-panel CALIBRATOR switch.)	B2. Check Calibrator Output Voltage.	C2. Check/Adjust Calibrator Output Voltage.
Load ≥ 100 kΩ	40 mV, 0.4 V, 4 V.		
Load = 50 Ω	4 mV, 40 mV, 0.4 V.		
Accuracy	Within 1%.		
Output Current	40 mA available through CALIBRATOR output with a bnc-to-current loop adapter. CALIBRATOR switch must be set to 4 V for calibrated output.	Does not normally require customer verification. Implicitly checked in steps B2, and C2.	
Repetition Rate	1.0 kHz, within 0.25%.	B3. Check Calibrator 1-kHz Repetition Rate.	C3. Check/Adjust Calibrator 1-kHz Repetition Rate.
Duty Cycle	49.8% to 50.2%.	Does not normally require customer verification. Satisfactory operation substantiated at the factory.	
Rise Time and Fall Time 100 pF maximum load)	250 μs or less.		
Ground Post	Provides user a convenient ground reference point on front panel.	Does not normally require customer verification. Substantiated at the factory.	

http://manoman.sqhill.com

TABLE 4-2 (CONT)
Performance Check Summary

Characteristic	Performance Requirement	Part I Performance Check Procedure Title	Part II Adjustment and Performance Check Procedure Title
EXTERNAL CONNECTORS (CONT)			
EXTERNAL KEYBOARD	25-pin female rear-panel connector for connecting an external keyboard.	Does not normally require customer verification. Substantiated at the factory.	
GPIB IEEE-488-1978	24-pin female rear-panel connector for connecting instrument to GPIB. Meets IEEE-488-1978 (Not available on Option 0D.)		
MEMORY BACK-UP POWER	Two rear-panel female banana jacks. Provides for external power to maintain power on RAM, thereby providing non-volatile memory.	Satisfactory operation substantiated throughout procedure where plug-ins are removed and installed with POWER OFF.	
Voltage Requirement	6.0 to 6.5 V dc.		
TTL SIGNAL OUTPUT SWL/SWH	Rear-panel bnc connector provides TTL-compatible signal.	B8. Check TTL Signal Output.	C8. Check TTL Signal Output.
Output Level	Set by user commands available on the Waveform Calculator.		
SWL Command	Selects low level output between 0 V and +0.8 V. Maximum current sink is 16 mA.		
SWH Command	Selects high level output between +2.4 V and +5.0 V. Maximum current source is 2.6 mA.		
+SAWTOOTH OUT	Rear-panel bnc connector.	B5. Check +Sawtooth Output.	C5. Check +Sawtooth Output.
Polarity	Positive-going with baseline at 0 V, within 1 V, into 1 MΩ load.		
Output Voltage	10 V maximum.	Does not normally require customer verification. Satisfactory operation substantiated at the factory.	

http://manoman.sqhill.com

TABLE 4-2 (CONT)
Performance Check Summary

Characteristic	Performance Requirement	Part I Performance Check Procedure Title	Part II Adjustment and Performance Check Procedure Title
EXTERNAL CONNECTORS (CONT)			
+SAWTOOTH OUT (Continued)			
Rise Time into 50 Ω	50 mV/unit-of-time, selected by the time-base unit time/div switch, within 15%; 100 ns/div maximum.	Does not normally require customer verification. Satisfactory operation substantiated at the factory.	
Rise Time into 1 MΩ	1 V/unit-of-time, within 10%, selected by the time-base unit time/div switch; 1 μs/div maximum.		
Output Resistance	Approximately 950 Ω.		
+GATE OUT	Rear-panel bnc connector.	B6. Check +Gate Output	C6. Check +Gate Output.
A Gate	Derived from A HORIZ time-base unit main gate.		
B Gate	Derived from B HORIZ time-base unit main gate.		
Dly'd Gate	Derived from A HORIZ time-base unit delayed gate.		
Polarity			
A or B gate	Positive-going with baseline at 0 V, within 1.0 V, into 1 MΩ load.		
A Dly'd Gate	Positive level when A time-base delayed sweep or B sweep is enabled; 0 V, within 1.0 V, into 1 MΩ load, when sweeps are disabled.		
	Output is positive when no plug-in is used or when plug-in does not provide delay gate.		

http://manoman.sqhill.com

TABLE 4-2(CONT)
Performance Check Summary

Characteristic	Performance Requirement	Part I Performance Check Procedure Title	Part II Adjustment and Performance Check Procedure Title
EXTERNAL CONNECTORS (CONT)			
+GATE OUT (Continued)		Does not normally require customer verification. Satisfactory operation substantiated at the factory.	
Output Voltage	10 V maximum.		
Into 50 Ω Load	0.5 V, within 10%.		
Into 1 MΩ Load	10 V, within 10%, (up to 1 μs/div).		
Rise Time into 50 Ω Output Resistance	20 ns or less. Approximately 950 Ω.		
SIGNAL OUT	Rear-panel bnc-connector selected by A TRIGGER SOURCE switch.	C3. Check Signal Out Selection.	D5. Check Trigger Selector Operation.
Source	Same as A TRIGGER SOURCE.		
Output Voltage	±15 V maximum.	Normally does not require customer verification. Satisfactory operation substantiated at the factory.	
Into 50 Ω Load.	25 mV/div of vertical deflection, with 25%.		
Into 1 MΩ Load.	0.5 V/div of vertical deflection, within 25%.		
Bandwidth into 50 Ω Load (-3 dB)	Varies with vertical plug-in selected. See 7000-Series Oscilloscope Systems Specifications in the Operators Manual.	Does not normally require customer verification. Satisfactory operation substantiated at the factory.	
DC Centering	0 V, within 1 V, into 1 MΩ load.	C2. Check Vertical Signal Out DC Centering.	D4. Check/Adjust Vertical Signal Out DC Centering.
Aberrations	15% p-p, or less, within 50 ns of step.	Does not normally require customer verification. Satisfactory operation substantiated at the factory.	
Output Resistance	Approximately 950 Ω.		

http://manoman.sqhill.com

TABLE 4-2 (CONT)
Performance Check Summary

Characteristic	Performance Requirement	Part I Performance Check Procedure Title	Part II Adjustment and Performance Check Procedure Title
EXTERNAL CONNECTORS (CONT)			
Z-AXIS INPUT	Rear-panel bnc connector.	A2. Check External Z-Axis Operation.	B11. Check External Z-Axis Operation.
Polarity and Sensitivity	+2 V provides complete blanking from maximum intensity condition; -2 V provides complete unblanking from minimum intensity condition.		
Low-Frequency Limit	Dc.	Does not normally require customer verification. Satisfactory operation substantiated at the factory.	
Input Resistance	Approximately 470 Ω.		
Input Capacitance	Less than 50 pF.		
Open Circuit Voltage	Approximately 0 V.		
Maximum Input Voltage	15 V (dc plus peak ac).		
Maximum Repetition Rate	1 MHz.		
SINGLE SWEEP RESET	Rear-panel bnc connector.	B7. Check Single Sweep Reset and Camera Connector.	C7. Check Single Sweep Reset and Camera Connector.
Input	Input to reset single-sweep function of time-base units installed in A and B HORIZ compartments.		
Signal Required	Closure to ground (or switching from the high level to the low level in less than 1 ms) resets the sweep.		
High Level	+50 V to +10 V, sink less than 40 μA.	Does not normally require customer verification. Satisfactory operation substantiated at the factory.	
Low Level	+0.5 V to −5 V, sink less than 10 mA.		
Minimum Pulse Width	10 μs at 50% amplitude points.		

http://manoman.sghill.com

TABLE 4-2 (CONT)
Performance Check Summary

Characteristic	Performance Requirement	Part I Performance Check Procedure Title	Part II Adjustment and Performance Check Procedure Title
EXTERNAL CONNECTORS (CONT)			
SINGLE SWEEP RESET (Continued)		Does not normally require customer verification. Satisfactory operation substantiated at the factory.	
Maximum Input Voltage	+50 V to −5 V (dc plus peak ac).		
AC Power Input	3-pin male connector.	Does not normally require customer verification. Substantiated at the factory.	
GPIB INTERFACE			
Functions Implemented (as per IEE 488-1978)	Description:	Does not normally require customer verification. Satisfactory operation substantiated at the factory.	
SH1	Complete Source Handshake.		
AH1	Complete Acceptor Handshake.		
T5	Talk Function.		
L3	Listen Function.		
SR1	Complete Service Request Capability.		
RL1	Complete Remote/ Local Capability.		
PPO	No Parallel Poll Capability.		
DC1	Complete Device Clear Capability.		
DT1	Complete Device Trigger Capability.		
CO	No Controller Capability.		

http://manoman.sqhill.com

TABLE 4-2 (CONT)
Performance Check Summary

Characteristic	Performance Requirement	Part I Performance Check Procedure Title	Part II Adjustment and Performance Check Procedure Title
COMMAND ACCURACY			
NOTE *All keyboard commands not listed below do not contribute accuracy errors, with exception of the >VCRD command. Refer to Section 9 of the Operators Manual, Command Language, for additional information.*			
Waveform Functions Arithmetic Functions		Does not normally require customer verification. Satisfactory operation substantiated at the factory.	
SQRT LN EXP SGN +,−,/,*	Accurate to 4 significant digits $\pm(6*10^{-4})$,VSCL).		
Cursors Functions HCRD	Accurate to 4 significant digits $\pm(6*10^{-5})*$(HSCL).		
VCRD	Accurate to 4 significant digits $\pm(6*10^{-5})*$(VSCL).		
Data Storage Functions PNT	Accurate to 4 significant digits $\pm(6*10^{-5})*$(VSCL).		
>PNT	Accurate to 4 significant digits $\pm(6*10^{-4})*$(VSCL).		
Waveform Functions ORD SMOOTH DIFF INTRP INTG	Accurate to 4 significant digits $\pm(6*10^{-5})*$(VSCL).		
>ORD	Accurate to 4 significant digits $\pm(6*10^{-4})*$(VSCL).		
	If autoscaling occurs, all waveform points are rescaled to: $\pm(6*10^{-4})*$(VSCL).		

http://manoman.sqhill.com

TABLE 4-2 (CONT)
Performance Check Summary

Characteristic	Performance Requirement	Part I Performance Check Procedure Title	Part II Adjustment and Performance Check Procedure Title
COMMAND ACCURACY (CONT)			
Waveform Parameters MAX MIN P-P MID MEAN RMS	Accurate to 4 significant digits $\pm(6*10^{-5})*(VSCL)$.	Does not normally require customer verification. Satisfactory operation substantiated at the factory.	
ENERGY	Accurate to 4 significant digits $\pm(6*10^{-5})*(VSCL^2)*(HSCL)$.		
AREA	Accurate to 4 significant digits $\pm(6*10^{-5})*(VSCL)*(HSCL)$.		
FREQ	Accurate to 4 significant digits $\pm(6*10^{-4})*(HSCL)$.		
DELAY WIDTH RISE FALL PER	Accurate to 4 significant digits $\pm(6*10^{-4})*(HSCL)$.		
Waveform Scaling Functions VZR VSCL >VSCL	Accurate to 4 significant digits $\pm(6*10^{-5})*(VSCL)$.		
HSCL >HSCL	Accurate to 4 significant digits $\pm(6*10^{-5})*(HSCL)$.		
>VZR VXPD	Accurate to 4 significant digits $\pm(6*10^{-4})*(VSCL)$.		
Constant Functions Arithmetic Functions SQRT LN EXP +,−,/,*	Accurate to 4 significant digits.		

http://manoman.sqhill.com

TABLE 4-2 (CONT)
Performance Check Summary

Characteristic	Performance Requirement	Part I Performance Check Procedure Title	Part II Adjustment and Performance Check Procedure Title
POWER SOURCE			
Voltage Range (AC, RMS)	Selected by rear-panel LINE VOLTAGE SELECTOR switch.	Does not normally require customer verification. Satisfactory operation substantiated at the factory.	
115 V Range	From 90 to 132 V.		
230 V Range	From 180 to 250 V.		
Line Frequency	From 48 to 440 Hz.		
Maximum Power Consumption	230 W, nominal.		
Maximum Current	3.5 A at 60 Hz, 90 V line. 1.8 A at 60 Hz, 180 V line.		
Fuse	4 A fast-blowing type.		
WAVEFORM CALCULATOR			
Keyboard		Does not normally require customer verification. Satisfactory operation substantiated at the factory.	
Controls	An array of key switches which allows the user to execute commands; pressing a key issues a command to the processor (except in the GPIB Remote mode).		
External Connector	25-pin male connector on 56 inch (±3 inches) cable for connecting the keyboard to the mainframe.	Does not normally require customer verification. Substantiated at the factory.	

http://manoman.sqhill.com

ADJUSTMENT INTERVAL

To maintain instrument accuracy, check performance every 1000 hours of operation, or every 6 months if used infrequently. Before complete adjustment, thoroughly clean and inspect this instrument as outlined in the Maintenance section.

TEKTRONIX FIELD SERVICE

Tektronix Field Service Centers and the Factory Service Center provide instrument repair and adjustment services. Contact your Tektronix Field Office or representative for further information.

SPECIAL FIXTURES

Special fixtures are used only where they facilitate instrument adjustment. These fixtures are available from Tektronix, Inc. Order by part number from Tektronix Field Offices or representatives.

TEST EQUIPMENT REQUIRED

The test equipment listed in Table 4-3 is required for a complete Adjustment and Performance check of the 7854 Oscilloscope. If only a Performance Check is to be performed, the items required for Adjustment only are not used and are indicated by footnote 1. The remaining test equipment is common to both procedures.

The specifications for test equipment, given in Table 4-3 are the minimum required to meet the performance requirements. Detailed operating instructions for test equipment are omitted in these procedures. Refer to the test equipment instruction manual if more information is needed.

TEST EQUIPMENT ALTERNATIVES

All of the listed test equipment is required to completely calibrate this instrument. However, complete checking or adjusting may not always be necessary or desirable. You may be satisfied with checking only selected characteristics, thereby reducing the amount of test equipment actually required.

The calibration procedures in Part II are based on the first item of equipment given as an example. When other equipment is substituted, control settings or setups, may need to be altered. If the exact item of equipment given as an example in Table 4-3 is not available, first check the Minimum Specifications column carefully to see if any other equipment might suffice. Then check the Purpose column to see what this item is used for. If used for a performance check or adjustment that is of little or no importance for your measurement requirements, the item and corresponding step(s) can be deleted.

TABLE 4-3
Test Equipment

Description	Minimum Specifications	Purpose	Examples of Applicable Test Equipment
1. Test Oscilloscope	Bandwidth, dc to 200 megahertz, minimum deflection factor 10 millivolts/division; accuracy, within 3%. Dual-channel and both added and alternate vertical modes.	Used throughout calibration procedure.	a. TEKTRONIX 7704A Oscilloscope System with 7A18 and 7A29 Amplifier; 7B80 or 7B10 Time Base, and P6053B Probe.
			b. TEKTRONIX 475 Oscilloscope with P6053B Probe.
			c. Refer to the Tektronix Products catalog for compatible oscilloscope system.
2. Amplifier Unit (Two Required, one may be 3 below)	Tektronix 7A-series plug-in unit.	Used throughout procedure to provide vertical input to the instrument under adjustment.	a. TEKTRONIX 7A26 Amplifier.
			b. TEKTRONIX 7A16A Amplifier.

http://manoman.sqhill.com

TABLE 4-3 (CONT)
Test Equipment

Description	Minimum Specifications	Purpose	Examples of Applicable Test Equipment
3. Amplifier Unit (Dual Trace)	Any 7A-series dual display amplifier unit.	Used to check position and operation of read-out display.	a. Any 7A-series dual amplifier unit (may be shared with a 7000-series test oscillo-scope).
4. Time-Base Unit (Two, One Delaying)	Sweep rate 5 nano-seconds/division.	Used throughout procedure to provide sweep.	a. TEKTRONIX 7B92A Time Base.
			b. TEKTRONIX 7B15 Time Base.
			c. TEKTRONIX 7B10 Time Base.
5. Signal Standar-dizer (Two Required)	Produces gain-check and pulse-response waveforms.	Used throughout pro-cedure to standardize instrument so plug-in units can be inter-changed without complete readjustment. Also used to adjust crt geometry.	a. Tektronix Calibration Fixture 067-0587-02.
			b. 7000-series plug-in units with suitable signal sources may be substituted if lower performance is accep-table.
6. Plug-In Extender (Rigid Calibration Fixture)	Provides access to plug-in connectors.	Power Supply Voltage, Trigger system and Digitizer System checks and adjust-ments.	a. Tektronix Part 067-0589-00.
7. 7854 Analog[1] Test Card	Allows operation of the analog system with digital boards removed.	Used to adjust the Vertical Amplifier thermal compen-sations.	a. Tektronix Part 067-0912-00.
8. Precision DC Voltmeter (DVM)	Range, −75 to +200 volts; accuracy, within 0.1%.	Check and adjustment of calibrator output accuracy, power supply voltages and Z-axis display voltages.	a. TEKTRONIX DM501 Digital Multimeter with power module.
			b. Fluke Model 825A Differential DC Volt-meter.
9. Time-Mark Generator	Marker outputs, 1 nanosecond to 0.1 second; marker accuracy; within 0.1%, trigger output, 1 milli-second.	Check and adjustment of horizontal timing, digitizer timing, and calibrator frequency.	a. TEKTRONIX TG 501 Time-Mark Generator with power module.
			b. TEKTRONIX Type 184 Time-Mark Generator.

[1] Used for calibration only; not used for performance check.

http://manoman.sqhill.com

TABLE 4-3 (CONT)
Test Equipment

Description	Minimum Specifications	Purpose	Examples of Applicable Test Equipment
10. Low-Frequency Sine-Wave Generator	Frequency, 250 kilohertz to 250 megahertz; output amplitude, variable from 50 millivolts to 3 volts into 50 ohms.	Check and adjust horizontal bandwidth, digitizer bandwidth, and external Z-Axis inputs.	a. TEKTRONIX SG 503 Leveled Sine-Wave Generator with power module. b. General Radio 1310-B Oscillator.
11. High-Frequency Sine-Wave Generator	Frequency 250 megahertz to 475 MHz, reference frequency, 10 megahertz or lower; output amplitude, variable from 0.5 to 4 volts into 50 ohms; amplitude accuracy, constant within 1% of reference as output frequency changes.	Check and adjustment of vertical bandwidth, digitizer bandwidth, and vertical channel isolation.	a. TEKTRONIX SG 504 Leveled Sine-Wave Generator with power module.
12. Function Generator	Waveform outputs; sinewave, squarewave and triangular from 6 Hz to 3 MHz.	Used throughout procedure for signal source.	a. TEKTRONIX FG503, with Power Module.
13. 10X Passive Prove With Short Grounding Strap[1]	Compatible with test oscilloscope to be used.	Used to check signals out, digitizer signal levels, calibrator and Z-axis adjustment.	a. TEKTRONIX P6053B. b. TEKTRONIX P6054A.
14. Coaxial Cable (Two each 42 inch, one each 18 inch)	Impedance, 50 ohms; type, RG-58/U; length, 18 and 42 inches; connectors, bnc.	Signal interconnection.	a. Tektronix Part 012-0076-00 (18 inches) and Tektronix Part 012-0057-01 (42 inches).
15. 50 Ohm Terminators (Two Each)	Impedance, 50 ohms; accuracy, within 2%; connectors, bnc.	Output termination for signal generators, if amplifier unit is not 50-ohm input impedance, and termination of trigger inputs.	a. Tektronix Part 011-0049-01.
16. 2X Attenuator	Accuracy within 2%; connectors, bnc.	Check Vertical bandwidth.	a. Tektronix Part 011-0069-02.
17. Bnc-T Connector	Bnc-to-bnc.	Used to check external Z-axis operation, X-Y Compensation and vertical channel switch.	a. Tektronix Part 103-0030-00.
18. Screwdriver[1]	2 inch shaft, slot type.	Used to adjust Y-axis alignment.	a. Tektronix Part 003-0511-00. b. Xcelite R182.

[1] Used for calibration only; NOT used for performance check.

http://manoman.sqhill.com

TABLE 4-3 (CONT)
Test Equipment

Description	Minimum Specifications	Purpose	Examples of Applicable Test Equipment
19. Nylon Tuning Tool[1]	1 inch shaft.	Adjustment of Vertical high-frequency compensations.	a. Tektronix Part 003-0675-00.
20. Low-Capacitance Screwdriver[1]	1 inch shaft.	Used throughout adjustment procedure to adjust variable components.	a. Tektronix Part 003-0000-00.
21. Screwdriver[1] (Phillips head)	3 inch shaft, 3/32-inch bit.	Used for power supply and rear panel removal.	a. Tektronix Part 003-0341-00.
22. 18" Jumper Wire	18 inch with alligator or similar clips.	Used to center vertical Amplifier and set Digitizer codes.	a. Allied Part 920-605.
23. Bnc to Clip Lead Adapter	Bnc to 2 lead.	Used to check TTL SIGNAL OUTPUT.	a. Tektronix Part 013-0076-00.
24. Battery	6 V to 6.5 V at 0.7 amps with appropriate connectors.	Used throughout procedure as Memory Backup power.	a. Gates #0800-0011. b. Gates #0810-0011.
25. Resistor	887 ohm.	Used to check TTL SIGNAL OUTPUT.	a. Tektronix Part 321-0188-00.
26. Resistor	909 ohm.	Used to check TTL SIGNAL OUTPUT.	a. Tektronix Part 321-0189-00.

[1] Used for calibration only; NOT used for performance check.

http://manoman.sqhill.com

PART 1—PERFORMANCE CHECK

The following procedure (Part 1—Performance Check) verifies electrical specifications without removing instrument covers or making internal adjustments. All tolerances given are as specified in the Performance Check Summary Table 4-2.

Part II—Adjustment and Performance Check provides the information necessary to: (1) verify that the instrument meets the electrical specifications, (2) verify that controls function properly, and (3) perform all internal adjustments.

A separate Real-Time Functions Checkout Procedure is provided in the 7854 Operators Manual. Also, each waveform-processor function is demonstrated in the Measurement Keyboard and Waveform Calculator sections of the Operators Manual. (Refer to Table of Contents or Command Index for specific functions.)

INDEX TO PERFORMANCE CHECK PROCEDURE

A. Z-AXIS AND DISPLAY 4-22
1. Preliminary Setup Conditions 4-22
2. Check External Z-Axis Operation 4-22

B. CALIBRATOR AND OUTPUT SIGNALS 4-23
1. Preliminary Setup Conditions 4-23
2. Check Calibrator Output Voltage 4-23
3. Check Calibrator 1 kHz Repetition Rate ... 4-24
4. Check Calibrator Amplitude 4-25
5. Check ± Sawtooth Output 4-26
6. Check + Gate Output 4-26
7. Check Single Sweep Reset and Camera Connector 4-27
8. Check TTL Signal Output 4-28

C. TRIGGER SYSTEM 4-29
1. Preliminary Setup 4-29
2. Check Vertical Signal Out DC Centering .. 4-29
3. Check Signal Out Selection 4-30

D. HORIZONTAL SYSTEM 4-31
1. Preliminary Setup 4-31
2. Check Difference Between Horizontal Channels 4-31
3. Check 1 MS Linearity and High-Frequency Timing 4-32
4. Check X-Y Phasing 4-32
5. Check X-Y Compensation (Option 2 only) 4-33

E. VERTICAL SYSTEM 4-34
1. Preliminary Setup Conditions 4-34
2. Check Difference Between Vertical Channels 4-34
3. Check Vertical Low-Frequency Linearity ... 4-35
4. Check Vertical Channel Isolation 4-35

F. VERTICAL AND HORIZONTAL PICKOFF SYSTEM 4-37
1. Preliminary Setup Conditions 4-37
2. Check Vertical Sampler Offset 4-37
3. Check Horizontal Sampler Offset 4-38
4. Check Digitizer Vertical Gain 4-39
5. Check Digitizer Horizontal Gain 4-40
6. Check Vertical Digitizer Numeric Noise 4-40
7. Check Horizontal Digitizer Numeric Noise 4-41

PERFORMANCE CHECK POWER-UP SEQUENCE

NOTE

The performance of this instrument can be checked at any ambient temperature from 0° to +50° C unless otherwise stated.

1. Check that the instrument has been set for the proper power source and also that a suitable power cord and plug has been attached. Refer to Power Source Information in Section 1 for specific details.

2. Connect the instrument to the power source.

3. Connect the memory backup battery to the MEMORY BACKUP POWER INPUT.

4. Press the POWER button and allow 20 minutes warmup before proceeding.

CAUTION

To prevent instrument damage, turn off 7854 POWER before installing or removing plug-in units.

NOTE

To maintain the front-panel mode settings when switching plug-ins with POWER OFF, external power must be applied to the rear-panel MEMORY BACKUP POWER INPUT.

http://manoman.sqhill.com

A. Z-AXIS AND DISPLAY

Equipment Required: (Numbers correspond to those listed in Table 4-3, Test Equipment.)

2. Amplifier unit
4. Time base
10. Low-frequency sine-wave generator
14. Coaxial Cable (two 42-inch required)
17. Bnc-T connector
24. Battery (memory backup)

Shaded lines identify Performance Requirement CHECK.

A1. Z-AXIS AND DISPLAY PRELIMINARY SETUP

a. Perform the Performance Check Power-Up Sequence.

b. Refer to Section 5, Instrument Options, and the Change Information at the rear of this manual for any modifications which may affect this procedure.

c. Set the 7854 controls as follows:

POWER ..... On (pushbutton in)
VERTICAL MODE ..... LEFT
VERT TRACE SEPARATION (B) ..... Midrange
A TRIGGER SOURCE ..... VERT MODE
A INTENSITY ..... Midrange
HORIZONTAL MODE ..... A
B INTENSITY ..... Fully counterclockwise
B TRIGGER SOURCE ..... VERT MODE
FOCUS ..... Midrange
READOUT ..... OFF (in detent)
GRAT ILLUM ..... Midrange
CONTROL ILLUM ..... MEDIUM (rear panel)
STORED INTENSITY ..... Fully counterclockwise

A2. CHECK EXTERNAL Z-AXIS OPERATION

NOTE

First perform step A1, then proceed.

A2. SETUP CONDITIONS

7854 Controls:
READOUT intensity ..... OFF (in detent)
HORIZONTAL MODE ..... A

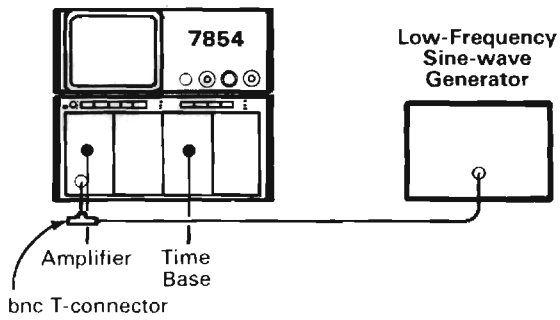

Test Equipment Controls:
Amplifier Unit
Deflection Factor ..... 0.5 V/div
Time Base
Sweep Rate ..... 20 μs/div
Triggering ..... Auto,Ac,Internal

2874-367

a. Set the low-frequency sine-wave generator for a 4-division display at 50 kilohertz (one volt above and below ground).

b. Set the A INTENSITY control for a dim display.

c. Connect the signal from the output of the bnc T-connector at the Amplifier input to the Z-AXIS INPUT connector on the rear panel with bnc cable.

d. **CHECK**—Positive portion of the displayed waveform is blanked out.

http://manoman.sqhill.com

B. CALIBRATOR AND OUTPUT SIGNALS

Equipment Required: (Numbers correspond to those listed in Table 4-3, Test Equipment.)

1. Test oscilloscope
4. Time base
8. Precision dc voltmeter (DVM)
9. Time-mark generator or frequency counter (optional)
14. Coaxial cable (one 18-inch, two 42-inch required)
15. 50-ohm terminator
17. Bnc-T connector
22. Jumper wire
23. Bnc-to-clip lead adaptor
24. Battery (memory backup)
25. 887Ω resistor
26. 909Ω resistor

Shaded lines identify Performance Requirement CHECK.

B1. CALIBRATOR AND OUTPUT SIGNALS PRELIMINARY SETUP

a. Perform the Performance Check Power-Up Sequence.

b. Refer to Section 5, Instrument Options, and the Change Information at the rear of this manual for any modifications which may affect this procedure.

c. Set the 7854 controls as follows:

POWER switch ..... On (pushbutton in)
VERTICAL MODE ..... RIGHT
VERT TRACE SEPARATION (B) ..... Midrange
A TRIGGER SOURCE ..... VERT MODE
A INTENSITY ..... Fully counterclockwise
HORIZONTAL MODE ..... A
B INTENSITY ..... Fully counterclockwise
B TRIGGER SOURCE ..... VERT MODE
READOUT intensity ..... OFF (in detent)
GRAT ILLUM ..... Midrange
CALIBRATOR ..... 4 V pushbutton in

B2. CHECK CALIBRATOR OUTPUT VOLTAGE

NOTE

First perform step B1, then proceed.

B2. SETUP CONDITIONS

7854 Controls:
No change in settings.

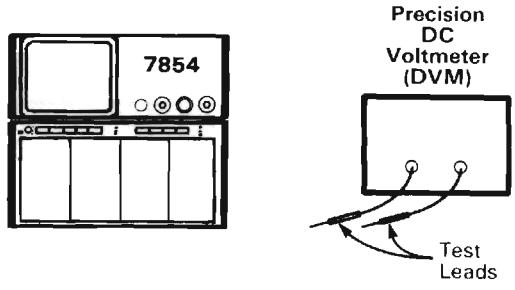

Test Equipment Controls:
Precision DC Voltmeter (DVM)
Range ..... Appropriate range for voltage to be measured

2874-368

a. Set both the 4 V and 0.4 V CALIBRATOR pushbuttons to the pressed position (this selects dc voltage).

b. Connect the precision dc voltmeter (DVM) test leads between the CALIBRATOR output and chassis ground.

c. **CHECK**—Meter reading for 0.3968 to 0.4048 volt.

http://manoman.sqhill.com

d. Disconnect the DVM.

e. Connect a 50-ohm terminator to the CALIBRATOR output.

f. Connect the DVM to the terminated CALIBRATOR output.

g. **CHECK**—Meter reading for 0.0397 to 0.0404 volt.

h. Disconnect the DVM and terminator.

B3. CHECK CALIBRATOR 1-kHz REPETITION RATE

NOTE

If the preceding step was not performed, first perform step B1, then proceed.

B3. SETUP CONDITIONS

7854 Controls:
CALIBRATOR ..... 4 V

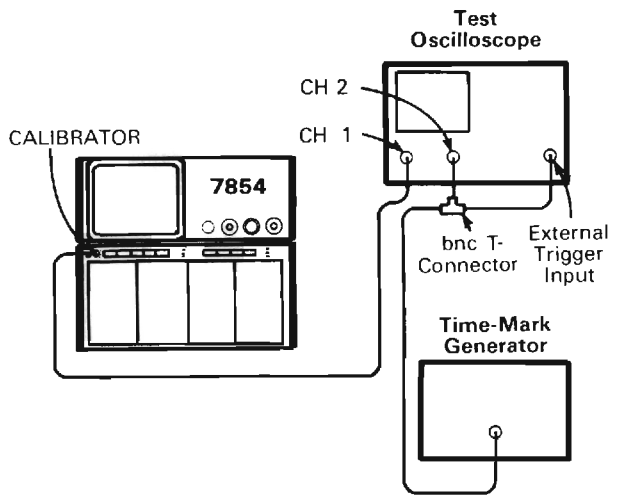

Test Equipment Controls:
Time-Mark Generator ..... 1 ms markers

Test Oscilloscope
Triggering ..... Auto,Ac,External
Input Coupling ..... DC
Sweep Rate ..... 1 ms/div
Vertical Mode ..... Add

2874-369

NOTE

An alternate method for step B3 is to use a frequency counter, with at least 0.1% accuracy, and check the CALIBRATOR rep rate to be exactly 1 kHz.

a. The 1-millisecond time-markers are connected to the test oscilloscope external trigger input and to the noninverting vertical channel of the test oscilloscope (use a bnc-T connector). The 7854 CALIBRATOR output is connected to the inverting input of the test oscilloscope.

b. Set the test oscilloscope triggering level for a stable time-mark display.

c. Set the test oscilloscope vertical deflection factors to display 2 divisions of CALIBRATOR signal and 1 division of time-marker signal.

d. Set the test oscilloscope sweep rate for 0.2 second/division.

e. **CHECK**—The time required for the 1-millisecond time marks to drift from the positive level of the CALIBRATOR signal to the negative level, and back to the positive level must be more than 0.4 second (2 divisions). This time can be measured directly from the display by observing the number of divisions that the markers move across the display area before it returns to the positive level.

f. Disconnect the bnc cable.

http://manoman.sqhill.com

B4. CHECK CALIBRATOR AMPLITUDE

NOTE

If the preceding step was not performed, first perform step B1, then proceed.

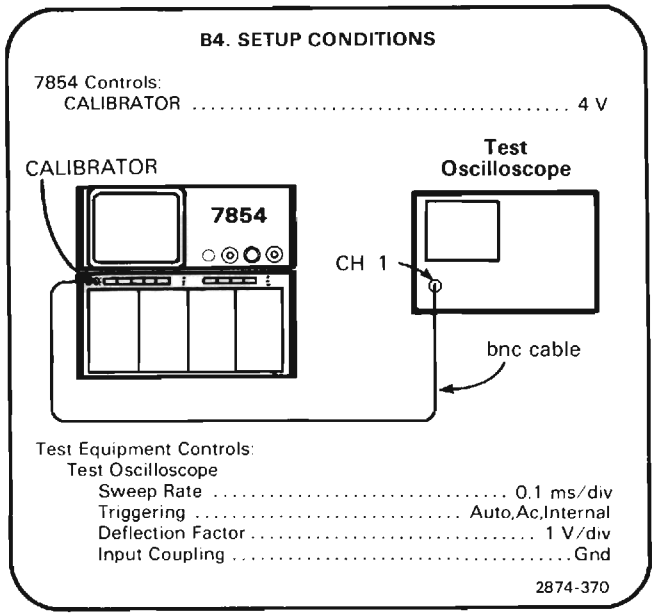

a. Set the ground reference level on the test oscilloscope to 2 divisions below graticule center.

b. Set the test oscilloscope input coupling to dc.

c. **CHECK**—Test oscilloscope for a 4-division display within 0.04-division.

d. Set the CALIBRATOR select switch to 0.4 V.

e. Set the test oscilloscope deflection factor to 0.1 V/division.

f. **CHECK**—Test oscilloscope for a 4-division display within 0.04-division.

g. Set the CALIBRATOR select switch to 40 mV.

h. Set the test oscilloscope deflection factor to 10 mV/division.

i. **CHECK**—Test oscilloscope for a 4-division display within 0.04-division.

j. Install a 50 Ω terminator between the CALIBRATOR output and the bnc cable.

k. Set the test oscilloscope deflection factor to 5 mV/division.

l. **CHECK**—Test oscilloscope for a 0.8-division display within 0.01 division.

m. Set the CALIBRATOR select switch to 0.4 V.

n. Set the test oscilloscope deflection factor to 10 mV/division.

o. **CHECK**—Test oscilloscope for a 4-division display within 0.04-division.

p. Set the CALIBRATOR select switch to 4 V.

q. Set the test oscilloscope deflection factor to 0.1 V/division.

r. **CHECK**—Test oscilloscope for a 4-division display within 0.04-division.

http://manoman.sqhill.com

B5. CHECK +SAWTOOTH OUTPUT

NOTE

If the preceding step was not performed, first perform step B1, then proceed.

B5. SETUP CONDITIONS

7854 Controls:
No change in settings.

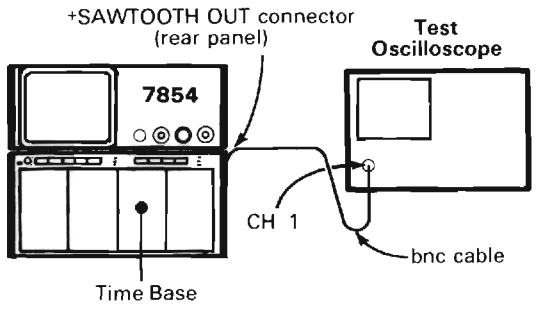

Test Equipment Controls:
Test Oscilloscope
Sweep Rate ..... 2 ms/div
Vertical Deflection ..... 2 V/div (1 MΩ input)

Time Base
Sweep Rate ..... 0.1 ms/div
Triggering ..... Auto,Ac,Internal

2874-371

a. **CHECK**—That the slope of the test oscilloscope display is positive-going and that the sawtooth baseline is within 1 volt of ground.

b. If a signal is not present at the +SAWTOOTH OUT connector, move the time-base unit to the B HORIZ compartment of the 7854.

c. **CHECK**—That the test oscilloscope display is positive-going and that the sawtooth baseline is within 1 volt of ground.

d. Disconnect the bnc cable.

B6. CHECK +GATE OUTPUT

NOTE

If the preceding step was not performed, first perform step B1, then proceed.

B6. SETUP CONDITIONS

7854 Controls:
No change in settings.

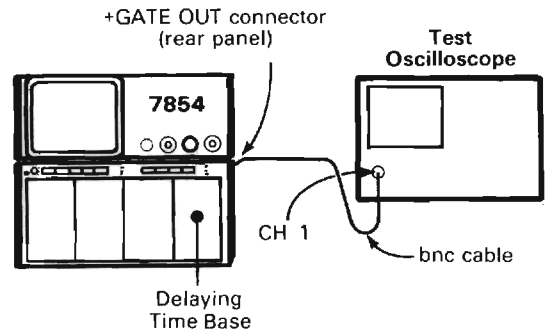

Test Equipment Controls:
Test Oscilloscope
Sweep Rate ..... 2 ms/div
Vertical Deflection ..... 2 V/div (1 MΩ input)

Delaying Time Base
Mode ..... Independent
Triggering ..... Auto,Ac,Internal
Sweep Rate ..... 0.5 ms/div

2874-372

a. **CHECK**—Test oscilloscope display for a positive-going gate waveform with a baseline at 0 volt, within 1 volt.

b. If a signal is not present at the +GATE OUT connector move the time-base unit to the A HORIZ compartment.

c. **CHECK**—Test oscilloscope display for a positive-going gate waveform with a baseline at 0 volt, within 1 volt.

e. If a signal is not present at the +GATE OUT connector, set the time base B Delay Mode switch to B Starts After Dly.

e. **CHECK**—Test oscilloscope display for a positive-going gate waveform with a baseline at 0 volt, within 1 volt.

f. Disconnect the bnc cable.

http://manoman.sqhill.com

B7. CHECK SINGLE SWEEP RESET AND CAMERA CONNECTOR

NOTE

If the preceding step was not performed, first perform step B1, then proceed.

B7. SETUP CONDITIONS

7854 Controls:
HORIZONTAL MODE ..... B

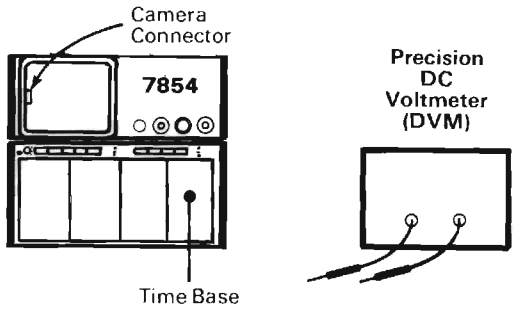

Test Equipment Controls:
Time Base
Sweep Rate ..... 50 ms/div
Triggering ..... Single Swp,Ac,Internal

Precision Dc Voltmeter
Range ..... 20 V

2874-373

a. Connect the precision dc voltmeter between the top pin of the camera connector on the crt bezel and chassis ground.

b. **CHECK**—Voltmeter reading to be +15 volts within 0.15 volt.

c. Connect the precision dc voltmeter between the bottom pin of the camera connector on the crt bezel and chassis ground.

d. **CHECK**—Voltmeter reading to be 0 volt.

e. Momentarily short the center pin of the camera connector on the crt bezel to the bottom pin of the camera connector using the jumper wire.

f. **CHECK**—Time bases Single Sweep Reset Ready indicator should be illuminated.

g. Momentarily short the center pin of the camera connector on the crt bezel to the bottom pin of the camera connector using the jumper wire.

h. **CHECK**—Time bases Trig'd indicator should illuminate and a sweep should occur.

i. Momentarily short the center pin of the rear-panel SINGLE SWEEP RESET bnc connector to ground using the jumper wire.

j. **CHECK**—Time base Single Sweep Reset Ready indicator should be illuminated.

k. Momentarily short the center pin of the rear-panel SINGLE SWEEP RESET bnc connector to ground using the jumper wire.

l. **CHECK**—Time bases Trig'd indicator should illuminate and a sweep should occur.

http://manoman.sghill.com

B8. CHECK TTL SIGNAL OUTPUT

NOTE

If the preceding step was not performed, first perform step B1, then proceed.

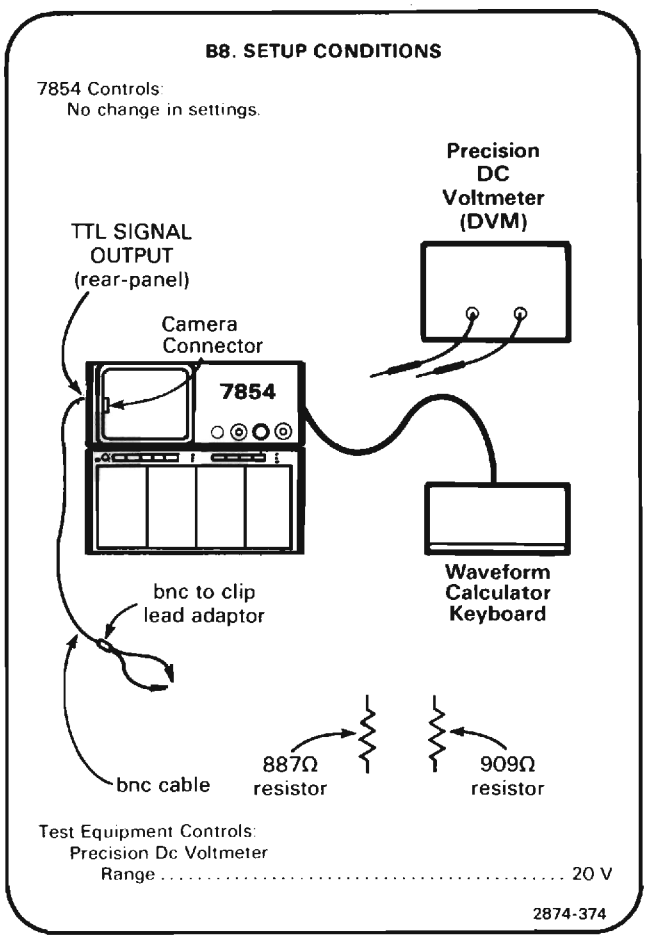

a. Connect a 909 Ω resistor (Tek Part No. 321-0189-00) to the red clip lead.

b. Connect the precision dc voltmeter (DVM) across the clip adaptor, observing clip adaptor polarity.

c. Press the SWH pushbutton on the WAVEFORM CALCULATOR keyboard.

d. Momentarily short the unattached end of the resistor to the upper pin of the camera connector (on crt bezel).

e. **CHECK**—Voltmeter reading to be between 0 volt and +0.8 volt.

f. Remove the 909 Ω resistor and replace it with an 887 Ω resistor (Tek Part No. 321-0188-00).

g. Sequentially press the *f* and SWL pushbuttons on the WAVEFORM CALCULATOR keyboard.

h. Momentarily short the unattached end of the resistor to the lower pin of the camera connector (on crt bezel).

i. **CHECK**—Voltmeter reading to be between +2.4 volts and +5.0 volts.

j. Disconnect bnc cable, clip adaptor and voltmeter.

NOTE

The output at the SIGNAL OUT connector is checked in the Trigger System procedure.

http://manoman.sqhill.com

C. TRIGGER SYSTEM

Equipment Required: (Numbers correspond to those listed in Table 4-3, Test Equipment.)

1. Test oscilloscope
2. Amplifier unit
4. Timebase (two required)
5. Signal Standardizer
12. Function Generator
14. Coaxial Cable (one 18-inch, two 42-inch required)
24. Battery (memory backup)

Shaded lines identify Performance Requirement CHECK.

C1. TRIGGER SYSTEM PRELIMINARY SETUP

a. Perform the Performance Check Power-up Sequence.

b. Refer to Section 5, Instrument Options, and the Change Information at the rear of this manual for any modifications which may affect this procedure.

c. Set the 7854 controls as follows:

POWER switch ..... On
VERTICAL MODE ..... RIGHT
VERT TRACE SEPARATION (B) ..... Midrange
A TRIGGER SOURCE ..... VERT MODE
A INTENSITY ..... Fully counterclockwise
HORIZONTAL MODE ..... A
B INTENSITY ..... Fully counterclockwise
B TRIGGER SOURCE ..... VERT MODE
FOCUS ..... Midrange
READOUT intensity ..... OFF (in detent)
GRAT ILLUM ..... Midrange

C2. CHECK VERTICAL SIGNAL OUT DC CENTERING

NOTE

First perform step C1, then proceed.

C2. SETUP CONDITIONS

7854 Controls:
No change in setting.

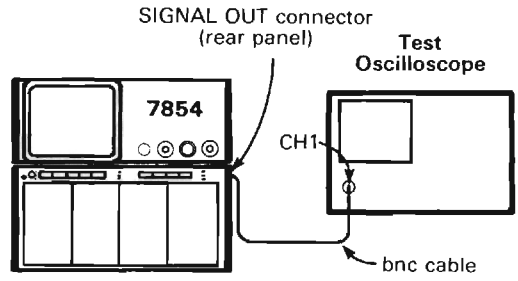

Test Equipment Controls:
Test Oscilloscope
Input Coupling ..... Gnd or Off
Vertical Deflection ..... 1 V/div
Vertical Mode ..... Channel 1
Sweep Rate ..... 1 ms/div

2874-376

a. Establish a ground reference for the test oscilloscope by positioning the trace to the graticule center line. Do not change the test oscilloscope position control after setting this ground reference.

b. Set the test oscilloscope input coupling switch to dc.

c. **CHECK**—Test oscilloscope display for a dc level within 1 division of the ground reference established in part (a).

http://manoman.sqhill.com

C3. CHECK SIGNAL OUT SELECTION

NOTE

If the preceding step was not performed, first perform step C1, then proceed.

C3. SETUP CONDITIONS

7854 Controls:
- VERTICAL MODE ..... LEFT
- CALIBRATOR ..... 4 V

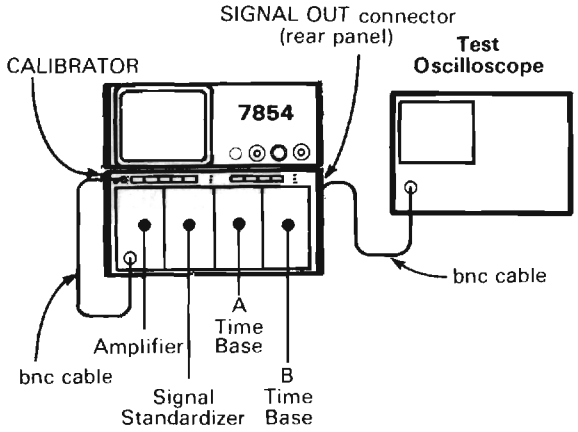

Test Equipment Controls:

Test Oscilloscope
- Deflection Factor ..... 2 V/div
- Sweep Rate ..... 0.2 ms/div

Amplifier
- Deflection Factor ..... 2 V/div
- Input Coupling ..... Dc

Signal Standardizer
- Test Selector Switch ..... Vert or Horiz + Step Resp
- Rep Rate ..... 10 kHz

A Time Base
- Sweep Rate ..... 0.2 ms/div
- Triggering ..... Auto,Ac,Internal
- Magnifier X1
- Mode ..... Independent

B Time Base
- Sweep Rate ..... 0.2 ms/div
- Triggering ..... Auto,Ac,Internal
- Magnifier X1
- Mode ..... Independent

2874-377

a. Set the A INTENSITY control for a visible display. Set the amplifier for a 2-division display in the lower half of the gratricule area. Set the A time-base unit triggering controls for a stable display.

b. Set the VERTICAL MODE switch to RIGHT.

c. Set the Signal Standardizer Amplitude and Position controls for a 2-division display in the upper half of the graticule area.

d. Set the VERTICAL MODE switch to ALT.

e. **CHECK**—For 1-kHz and 10-kHz triggered waveforms on the test oscilloscope crt (adjust the time-base unit trigger level controls as necessary).

f. Set the A TRIGGER SOURCE switch to LEFT VERT.

g. **CHECK**—Sequentially select all positions of the VERTICAL MODE switch and check for a stable display of only the 1-kHz waveform on the test oscilloscope.

h. Set the A TRIGGER SOURCE switch to RIGHT VERT.

i. **CHECK**—Sequentially select all positions of the VERTICAL MODE switch and check for a stable display of only the 10-kHz waveform on the test oscilloscope.

http://manoman.sqhill.com

D. HORIZONTAL SYSTEM

Equipment Required: (Numbers correspond to those listed in Table 4-3, Test Equipment)

2. Amplifier unit (two required)
4. Time base
5. Signal Standardizer unit
9. Time-mark generator
10. Low-frequency sine-wave generator
12. Function Generator
14. Coaxial Cable (one 18-inch, two 42-inch required)
24. Battery (memory backup)

Shaded lines identify Performance Requirement CHECK.

D1. HORIZONTAL SYSTEM PRELIMINARY SETUP

a. Perform the Performance Check Power-Up Sequence.

b. Refer to Section 5, Instrument Options, and the Change Information at the rear of this manual for any modifications which may affect this procedure.

c. Set the 7854 controls as follows:

POWER switch ..... On (pushbutton in)
VERTICAL MODE ..... RIGHT
VERT TRACE SEPARATION (B) ..... Midrange
A TRIGGER SOURCE ..... VERT MODE
A INTENSITY ..... Midrange
HORIZONTAL MODE ..... A
B INTENSITY ..... Midrange
B TRIGGER SOURCE ..... VERT MODE
FOCUS ..... Midrange
READOUT intensity ..... OFF (in detent)
GRAT ILLUM ..... As desired
CRT DISPLAY ..... SCOPE

D2. CHECK DIFFERENCE BETWEEN HORIZONTAL CHANNELS

NOTE

First perform step D1, then proceed.

D2. SETUP CONDITIONS

7854 Controls:
No change in settings.

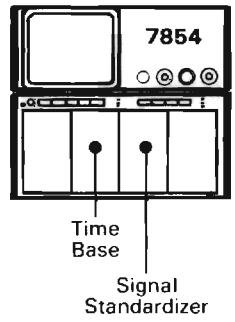

Test Equipment Controls:
Signal Standardizer
Test Selector Switch ..... Vert or Horiz Com Mode
Rep Rate ..... 10 kHz

Time Base
Sweep Rate ..... 0.1 ms/div
Triggering ..... Auto,Ac,Internal

2874-378

a. Set the A INTENSITY and FOCUS controls for a well defined trace.

b. Set the Signal Standardizer Test selector switch to Vert or Horiz Gain. align the bright vertical trace with the center vertical graticule line using the Signal Standardizer Position control.

c. **EXAMINE**—For 8 divisions of deflection between the center nine traces within 0.08 division. Note the exact deflection for comparison in part f.

http://manoman.sqhill.com

d. Move the Signal Standardizer to the B HORIZ compartment.

e. Set the HORIZONTAL MODE switch to B.

f. **CHECK**—For 8 divisions of deflection between the center nine traces within 0.08 division of the deflection noted in part c.

D3. CHECK 1 MS LINEARITY AND HIGH-FREQUENCY TIMING

NOTE

If the preceding step was not performed, first perform step D1, then proceed.

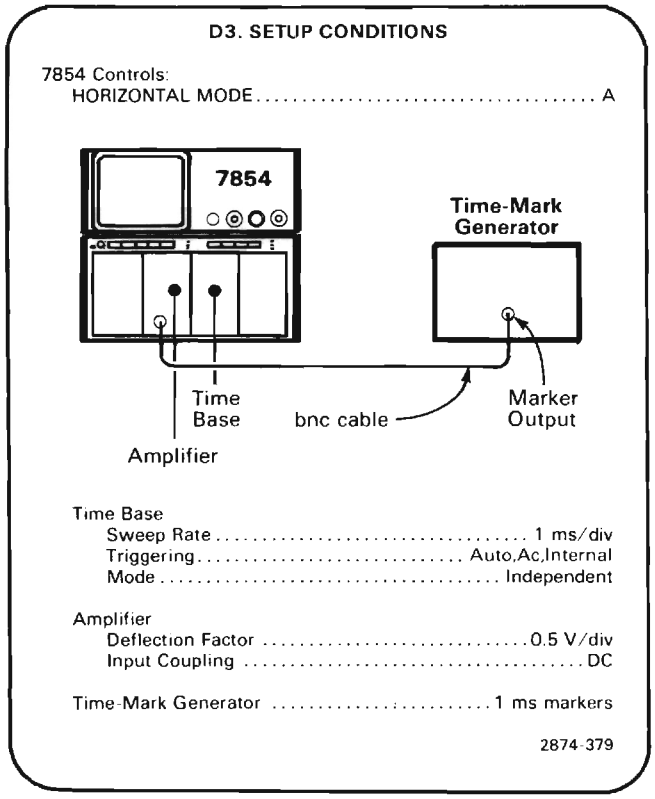

a. Set the Amplifier unit deflection factor for about 2 divisions of time marker display.

b. Set the time-base unit triggering controls for a stable display.

c. Position the first marker to the extreme left line on the graticule.

d. Set the time-base unit sweep calibration pre-set for 1 marker at each major graticule division between the second and tenth graticule lines (center 8 divisions).

e. **CHECK**—That each time-mark aligns with a vertical graticule line along the center horizontal graticule line within 0.05 division (1/4 of a minor division). This verifies 1 ms/div linearity.

f. Apply 1 nanosecond time markers and set the Amplifier unit vertical deflection for about 2 divisions of display.

g. Set the time base unit for 500 ps/division sweep rate.

h. **CHECK**—For 1 time-mark every 2 divisions over the center 8 divisions of the display within 0.2 division.

D4. CHECK X-Y PHASING

NOTE

If the preceding step was not performed, first perform step D1, then proceed.

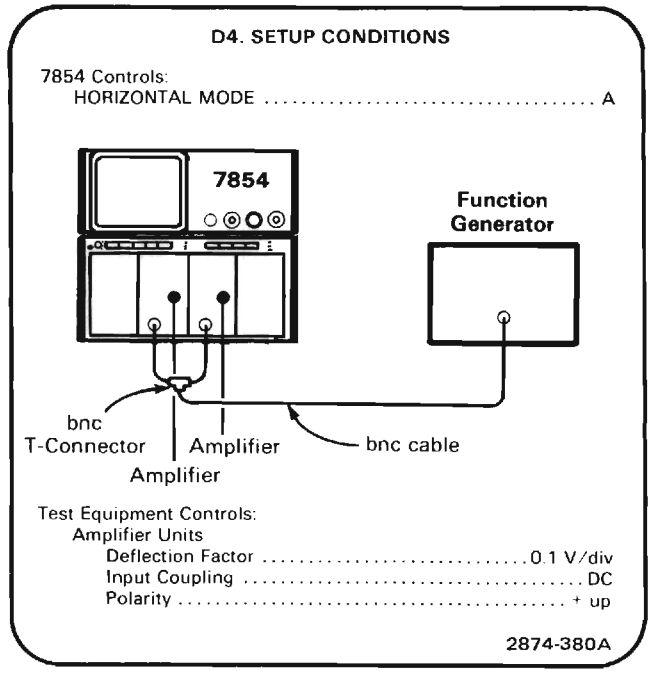

a. Set the function generator for eight divisions of vertical and horizontal deflection of a 35 kHz sinewave.

b. **CHECK**—Crt Lissajous display (see Figure 4-1) for a separation of 0.28 division or less (indicates 2 degrees or less phase shift).

http://manoman.sqhill.com

c. Remove the Amplifier unit from the RIGHT VERT compartment and install it in the LEFT VERT compartment.

d. Set the VERTICAL MODE switch to LEFT.

e. **CHECK**—Crt Lissajous display for a separation of 0.28 division or less (indicates 2 degrees or less of phase shift).

NOTE

If the instrument under calibration contains Option 02, omit the remainder of this step.

f. Remove the Amplifier Unit from the A HORIZ compartment and install it in the B HORIZ compartment.

g. Set the HORIZONTAL MODE switch to B.

h. **CHECK**—Crt Lissajous display for a separation of 0.28 division or less (indicates 2 degrees or less of phase shift).

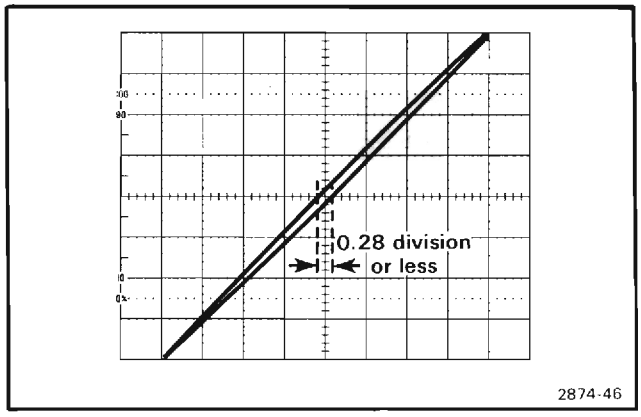

Figure 4-1. Typical display when checking X-Y Phase relationships.

D5. CHECK X-Y COMPENSATION (OPTION 02 ONLY)

NOTE

If the instrument under calibration does not contain Option 02, omit this step.

If the preceding step was not performed, first perform step D1, then proceed.

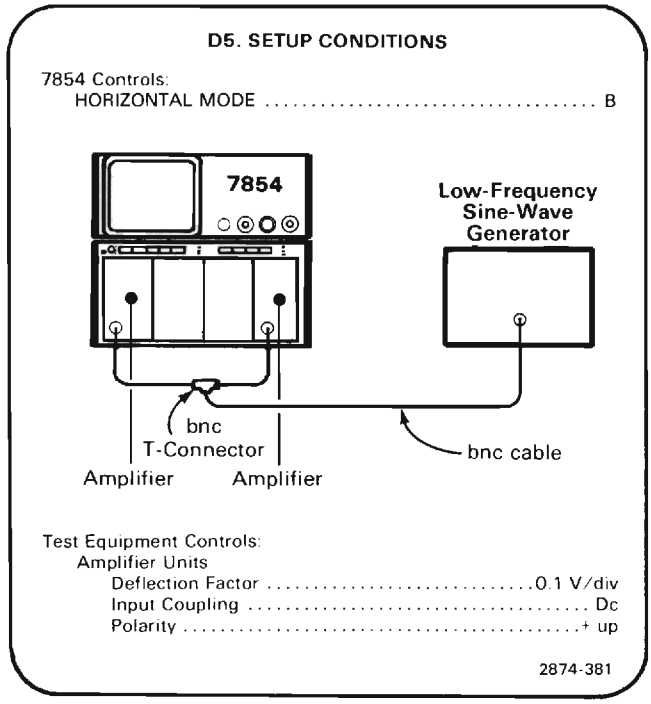

a. Set the low-frequency sine-wave generator for eight divisions of vertical and horizontal deflection at 1 MHz.

b. **CHECK**—Crt Lissajous display for a separation of 0.28 division or less (indicates 2 degrees or less phase shift).

c. Remov the Amplifier unit from the LEFT VERT compartment and install it in the RIGHT VERT compartment.

d. Set the VERTICAL MODE switch to RIGHT

c. **CHECK**—Crt Lissajous display for a separation of 0.28 division or less (indicates 2 degrees or less of phase shift).

http://manoman.sqhill.com

E. VERTICAL SYSTEM

Equipment Required: (Numbers correspond to those listed in Table 4-3, Test Equipment).

2. Amplifier
4. Time base
5. Signal Standardizer
6. Plug-in Extender
10. Low-Frequency sine-wave generator
11. High-Frequency sine-wave generator
14. Coaxial cable (one 42-inch required)
15. 50-ohm terminators (two required)
24. Battery (memory backup)

Shaded lines identify Performance Requirement CHECK.

E1. VERTICAL SYSTEM PRELIMINARY SETUP

a. Perform the Performance Check Power-Up Sequence.

b. Refer to Section 5, Instrument Options, and the Change Information at the rear of this manual for any modifications which may affect this procedure.

c. Set 7854 Oscilloscope controls as follows:

POWER switch ..... ON (pushbutton in)
VERTICAL MODE ..... RIGHT
VERT TRACE SEPARTION (B) ..... Midrange
A TRIGGER SOURCE ..... VERT MODE
A INTENSITY ..... Midrange
HORIZONTAL MODE ..... B
B INTENSITY ..... Midrange
B TRIGGER SOURCE ..... VERT MODE
FOCUS ..... Midrange
READOUT intensity ..... OFF (in detent)
GRAT ILLUM ..... As desired
CRT DISPLAY ..... SCOPE

E2. CHECK DIFFERENCE BETWEEN VERTICAL CHANNELS

NOTE

First perform step E1, then proceed.

E2. SETUP CONDITIONS

7854 Controls:
No change in settings.

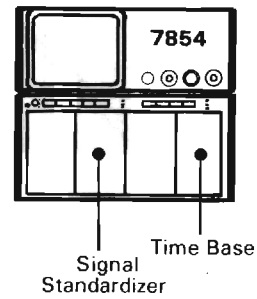

Test Equipment Controls:
Time Base
Sweep Rate ..... 2 μs/div
Triggering ..... Auto,Ac,External

Signal Standardizer
Test Selector Switch ..... Vert or Horiz Gain
Rep Rate ..... 10 kHz

2874-383A

a. Position the Signal-Standardizer display to align the bright trace with the graticule center line.

b. **EXAMINE**—For one trace per graticule division within 0.06 division over the center 6 graticule divisions. Note the exact magnitude for comparison in part e.

c. Remove the Signal Standardizer from the RIGHT VERT compartment and install it in the LEFT VERT compartment.

http://manoman.sqhill.com

d. Set the VERTICAL MODE switch to LEFT.

e. **CHECK**—For one trace per graticule division within 0.06 division of the magnitude noted in part b over the center 6 graticule divisions (verifies gain difference between vertical channels to be 1% or less).

E3. CHECK VERTICAL LOW-FREQUENCY LINEARITY

NOTE

If the preceding step was not performed, first perform step E1, then proceed.

E3. SETUP CONDITIONS

7854 Controls:
VERTICAL MODE ..... Right

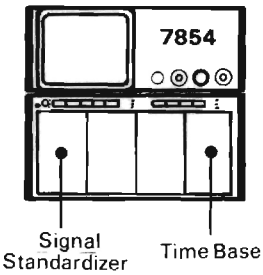

Test Equipment Controls:
Time Base
Sweep Rate ..... 1 ms/div
Triggering ..... Auto,Ac,Internal

Signal Standardizer
Test Selector Switch ..... Vert or Horiz + Step Resp
Rep Rate ..... 1 KHz

2874-384A

a. Set the Signal Standardizer Amplitude and Position controls to display exactly 2 divisions of signal in the center of the graticule area.

b. **CHECK**—Position the two-division display vertically and check for not more than 0.1 division of compression or expansion anywhere within the graticule area (verifies low-frequency linearity specification).

E4. CHECK VERTICAL CHANNEL ISOLATION

NOTE

If the preceding step was not performed, first perform step E1, then proceed.

E4. SETUP CONDITIONS

7854 Controls:
VERTICAL MODE ..... RIGHT

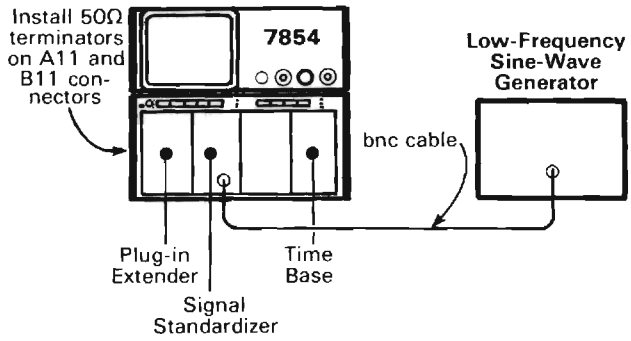

Test Equipment Controls:
Time Base
Sweep Rate ..... 10 μs/div
Triggering ..... Auto,Ac,External

Signal Standardizer
Test Selector Switch ..... Aux In

Low-Frequency Sine-Wave Generator
Frequency ..... 250 MHz

2874-385

a. Set the ouput of the low-frequency sine-wave generator and the Signal Standardizer Amplitude control for 8 divisions of deflection at 250 MHz.

b. Set the VERTICAL MODE switch to LEFT.

c. **CHECK**—The displayed signal for an amplitude of 0.08 division or less while adjusting the low-frequency sine-wave generator from 250 MHz to 50 MHz (verifies 250-MHz isolation of at least 100:1).

d. Move the Signal Standardizer to the LEFT VERT compartment and the Plug-in Extender (with 50-ohm terminators on A11 and B11 connectors) to the RIGHT VERT compartment.

e. Set the output of the low-frequency sine-wave generator and the Signal Standardizer amplitude control for 8 divisions of display at 250 MHz.

f. Set the VERTICAL MODE switch to RIGHT.

http://manoman.sqhill.com

g. **CHECK**—Displayed signal for an amplitude of 0.08 division or less while adjusting the low-frequency sine-wave generator from 250 MHz to 50 MHz (verifies 250-MHz isolation of at least 100:1).

h. Disconnect the low-frequency sine-wave generator from the Signal Standardizer and connect the high-frequency sine-wave generator to the Signal Standardizer Aux In input.

i. Set the VERTICAL MODE switch to LEFT.

j. Set the output of the high-frequency sine-wave generator and the Signal Standardizer Amplitude control for 8 divisions of display at 475 MHz.

k. Set the VERTICAL MODE switch to RIGHT.

l. **CHECK**—Displayed signal for an amplitude of 0.2 division or less while adjusting the high-frequency sine-wave generator from 475 MHz to 250 MHz (verifies 475-MHz isolation of at least 40:1).

m. Move the Signal Standardizer to the RIGHT VERT compartment and the Plug-in Extender to the LEFT VERT compartment.

n. Set the output of the high-frequency sine-wave generator and Signal Standardizer Amplitude control for 8 divisions of display at 475 MHz.

o. Set the VERTICAL MODE switch to LEFT.

p. **CHECK**—Displayed signal for an amplitude of 0.2 division or less while adjusting the high-frequency sine-wave generator from 475 MHz to 250 MHz (verifies 475-MHz isolation of at least 40:1).

http://manoman.sqhill.com

F. VERTICAL AND HORIZONTAL PICKOFF SYSTEM

Equipment Required: (Numbers correspond to those listed in Table 4-3, Test Equipment).

4. Time base
5. Signal Standardizer
6. Plug-in Extender
9. Time-mark generator
13. X10 Probe
14. Coaxial cable (one 18-inch, one 42-inch required)
16. 2X Attenuator
24. Battery (memory backup)

Shaded lines identify Performance Requirement CHECK.

F1. PICKOFF SYSTEM PRELIMINARY SETUP

a. Perform the Performance Check Power-Up Sequence.

b. Refer to Section 5, Instrument Options, and the Change Information at the rear of this manual for any modifications which may affect this procedure.

c. Set the 7854 controls as follows:

POWER switch ..... On (pushbutton in)
VERTICAL MODE ..... RIGHT
VERT TRACE SEPARATION (B) ..... Midrange
A TRIGGER SOURCE ..... VERT MODE
A INTENSITY ..... Midrange
HORIZONTAL MODE ..... A
B INTENSITY ..... Midrange
B TRIGGER SOURCE ..... VERT MODE
FOCUS ..... Midrange
READOUT intensity ..... OFF (in detent)
GRAT ILLUM ..... As desired

F2. CHECK VERTICAL SAMPLER OFFSET

NOTE

First perform step F1, then proceed.

F2. SETUP CONDITIONS

7854 Controls:
No change in settings.

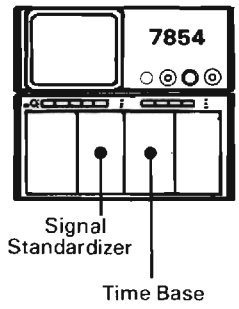

Test Equipment Controls:
Time Base
Sweep Rate ..... 0.5 ms/div
Triggering ..... Auto,Ac,Internal

Signal Standardizer
Signal Standardizer
Test Selector Switch ..... Vert or Horiz Com Mode
Rep Rate ..... 1 KHz

2874-386

a. Set the time-base unit triggering controls for an untriggered; stable display.

b. Press the *f*, BOTH and AQR pushbuttons on the front-panel keyboard in sequence to obtain a display of the real-time and digitized traces. Observe the two traces at graticule center. It may be necessary to set the A INTENSITY and STORED INTensity controls for an easily visible display.

http://manoman.sqhill.com

c. **CHECK**—The crt display for vertical overlaying of the traces within 0.1 division.

d. Move the Signal Standardizer to the LEFT VERT compartment.

e. Sequentially press the LEFT (VERTICAL MODE switch), *f*, BOTH and 10 Avg pushbuttons to obtain a display of the realtime and digitized waveforms.

f. **CHECK**—The crt display for vertical overlaying of the waveforms within 0.1 division.

g. Sequentially press the *f* and CRS1 pushbuttons to obtain a cursor display.

h. Set the READOUT intensity control for a visible character display.

i. Position the cursor to mid-screen by pressing the CRS1> pushbutton on the front panel keyboard.

j. **CHECK**—The character readout should indicate a vertical displacement from graticule center less than or equal to VCRD=(±)100 m (±0.1 div).

k. Move the Signal Standardizer to the RIGHT VERT compartment.

l. Press the RIGHT (VERTICAL MODE switch), *f*, BOTH and 10 Avg pushbuttons in sequence to obtain a display of the realtime and digitized waveforms.

m. Repeat part (j) for the RIGHT VERT compartment.

F3. CHECK HORIZONTAL SAMPLER OFFSET

NOTE

If the preceding step was not performed, first perform step F1, then proceed.

F3. SETUP CONDITIONS

7854 Controls:
No change in settings.

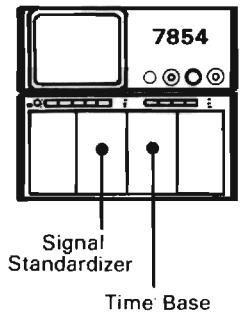

Test Equipment Controls:
Time Base
Sweep Rate ..... 0.5 ms/div
Triggering ..... Auto,Ac,Internal

Signal Standardizer
Test Selector Switch ..... Vert or Horiz + Step
Rep Rate ..... 1 kHz

2874-387

a. Set the time-base units triggering controls for a stable display.

b. Press SCOPE pushbutton on the front-panel keyboard to obtain a display of the real-time waveform.

c. Use the Signal Standardizer Position and Amplitude controls to display a 6-division square wave, centered on the crt graticule. Use the time-base position control to horizontally center the display with a transition at graticule center.

d. Press the *f*, BOTH and AQR pushbuttons on the front-panel keyboard to obtain a display of the real-time and digitized waveforms.

e. **CHECK**—The crt display for horizontal overlaying of the waveforms within 0.1 division at graticule center. It may be necessary to set the A INTENSITY and STORED INTensity controls for an easily visible display.

f. Move the time base to the B HORIZ compartment.

http://manoman.sqhill.com

g. Sequentially press the B (HORIZONTAL MODE switch), *f*, BOTH and AQR pushbuttons to obtain a display of the realtime and digitized waveforms.

h. **CHECK**—The crt display for horizontal overlaying of the waveforms within 0.1 division at graticule center. (It may be necessary to use the time base Position control to move a transition to graticule center.)

i. Sequentially press the *f* and CRS1 pushbuttons to obtain a cursor display.

j. Set the READOUT intensity control for a visible character display.

k. Position the cursor to the transition at graticule center by pressing the CRS1> pushbutton on the front-panel keyboard.

l. **CHECK**—The character readout should indicate a horizontal displacement from the left side of the graticule of HCRD = 2.5 ms (±0.05 ms).

m. Move the time-base unit to the A HORIZ compartment.

n. Press the A (HORIZONTAL MODE), *f*, BOTH and AQR pushbuttons in sequence to obtain a display of the realtime and digitized waveforms. (It may be necessary to use the time base Position control to move a transition to graticule center.)

o. Repeat parts (i) through (l) for the A HORIZ compartment.

F4. CHECK DIGITIZER VERTICAL GAIN

NOTE

If the preceding step was not performed, first perform step F1, then proceed.

F4. SETUP CONDITIONS

7854 Controls:
VERTICAL MODE ..... LEFT

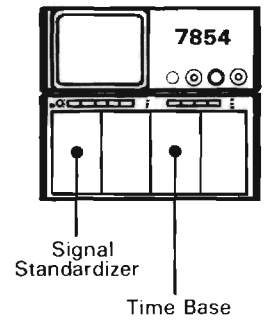

Test Equipment Controls
Time Base
Sweep Rate ..... 200 μs/div
Triggering ..... Auto,Ac,Internal

Signal Standardizer
Test Selector Switch ..... Vert or Horiz Gain
Rep Rate ..... 10 kHz

2874-388

a. Press the SCOPE pushbutton on the front-panel keyboard to obtain a realtime display. It may be necessary to set the A INTENSITY control for an easily visible display.

b. Set the time base Triggering and Holdoff controls for a stable staircase display.

c. Set the Signal Standardizer Position control to center the waveform on the crt.

d. Sequentially press the STORED and AVERAGE 10 pushbuttons on the front-panel keyboard to obtain a digitized staircase display. It may be necessary to vary the STORED INTensity control to obtain a visible display.

e. Press the CRS2-1 pushbutton on the front-panel keyboard to obtain a cursor display.

f. Press the CRS1> and <CRS2 pushbuttons on the front-panel keyboard to position the cursors to the midpoints of the steps 3 divisions above and 3 divisions below graticule center (6 divisions apart vertically).

http://manoman.sqhill.com

g. Turn the READOUT intensity control on and set it for a viewable character display.

h. **CHECK**—The character readout to be between △VCRD = ±5.94 and △VCRD = ±6.06.

i. **CHECK**—Vertical difference between cursors to be 6 divisions ±0.06 division in relation to the crt graticule.

F5. CHECK DIGITIZER HORIZONTAL GAIN

NOTE

If the preceding step was not performed, first perform step F1, then proceed.

F5. SETUP CONDITIONS

7854 Controls:
- VERTICAL MODE ..... LEFT
- HORIZONTAL MODE ..... B
- CRT DISPLAY ..... SCOPE

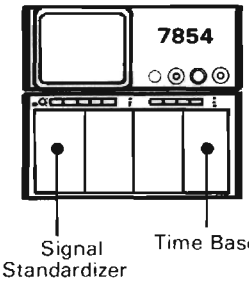

Test Equipment Controls:
- Time Base
  - Sweep Rate ..... 50 μs/div
  - Triggering ..... Auto,Ac,Internal
- Signal Standardizer
  - Test Selector Switch ..... Vert or Horiz +Step
  - Rep Rate ..... 10 kHz

2874-389

a. Set the Signal Standardizer Amplitude and Position controls for a 6-division square wave centered on the crt graticule.

b. Set the time base Triggering and Holdoff controls for a stable display.

c. Use a screwdriver to set the time-base unit front-panel Swp Cal adjustment for exactly one cycle per 2 horizontal divisions.

d. Sequentially press the STORED and AQR pushbuttons on the front panel keyboard to obtain a digitized display.

e. **CHECK**—The display for one cycle per 2 horizontal divisions over the center 8 horizontal divisions within 0.08 division.

f. Press the CRS2-1 pushbutton on the front-panel keyboard to obtain a cursor display.

g. Position the cursors to the transitions at the second and tenth vertical graticule lines.

h. Set the READOUT intensity control for a visible display of the cursor position information.

i. **CHECK**—The character readout display to be between △HCRD = 396 μs and △HCRD = 404 μs.

NOTE

The time base units Swp Cal adjustment should be reset according to the procedure given in the Service Manual for the time base in use.

F6. CHECK VERTICAL DIGITIZER NUMERIC NOISE

NOTE

If the preceding step was not performed, first perform step F1, then proceed.

F6. SETUP CONDITIONS

7854 Controls:
- CRT DISPLAY ..... STORED
- READOUT Intensity ..... Midrange

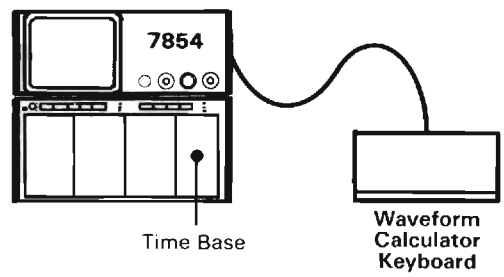

Test Equipment Controls:
- Time Base
  - Sweep Rate ..... 1 ms/div
  - Triggering ..... Auto,Ac,Internal

2874-390

http://manoman.sqhill.com

a. With the 7854 in STORED mode and the READOUT intensity set for an easily visible display, press the PROGRAM ENTRY key on the Waveform Calculator keyboard to obtain a program display with a line pointer at the left side of the crt.

b. Sequentially press the following keys to enter the program required to check numeric noise. Keystrokes that will not appear in the program listing shown on the 7854 crt are enclosed in parentheses ( ). Line numbers are automatically added.

(f), CLS, 2, *(f)*, >CNS, 3, *(f)*, >CNS, (NEXT),

GND, AQR, RMS, (NEXT),

2, CNS, +, 2, *(f)*, >CNS, (NEXT),

3, CNS, 1, +, 3, *(f)*, >CNS, (NEXT),

1, 0, 0, x<>y, IF y>x, 1, GOTO, (NEXT),

2, CNS, 3, CNS, /, (NEXT).

A listing of the program as it will appear on the 7854 crt follows, including the line numbers automatically added. This may be used to check the accuracy of the program as entered.

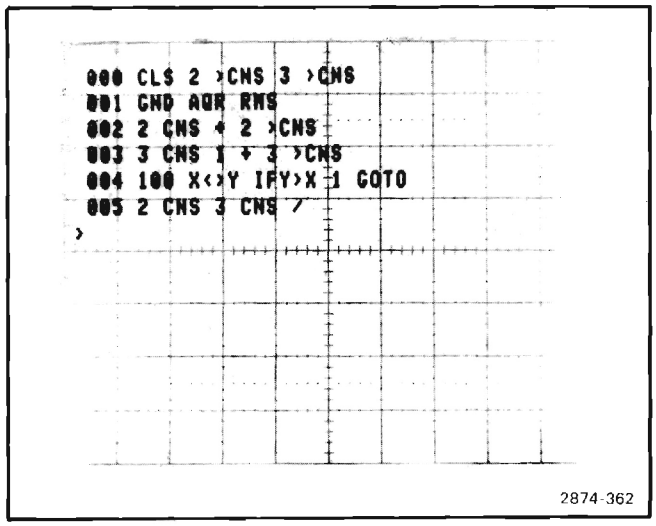

c. After the program has been entered into the 7854 memory, sequentially press the EXECUTE, f and START pushbuttons to run the program.

NOTE

As the program is running, audible warnings will be issued if the rear-panel AUDIBLE ERROR/WARNING switch is in the ON position. This is normal.

d. **CHECK**—The character display at the lower edge of the crt to indicate 100 (100 RMS measurements) and less than or equal to 8.000m (the average of these measurements). The remainder of the display line should be ignored.

NOTE

If the instrument under test does not have the Waveform Calculator keyboard (Option 0D), numeric noise may be checked by manually recording the RMS values obtained by sequentally pressing the GND, AQR and RMS keys on the front-panel Measurement keyboard when set up as indicated above (minus the Waveform Calculator keyboard). These measurements are totaled and divided by the number of measurements taken (averaged). Average noise is specified at 100 measurements.

F7. CHECK HORIZONTAL DIGITIZER NUMERIC NOISE

NOTE

The Horizontal Digitizer Numeric Noise cannot be checked without removing instrument covers. Only qualified service personnel should remove instrument covers and perform verification when required. Step H14 of the Performance Check and Adjustment Procedure verifies this specification.

http://manoman.sqhill.com

PART II—ADJUSTMENT AND PERFORMANCE CHECK

The following procedure (Part II—Adjustment and Performance Check) provides the information necessary to: (1) verify that the instrument meets the electrical specifications, (2) verify that controls function properly, and (3) perform all internal adjustments. All tolerances given are as specified in the Performance Check Summary Table 4-1.

Part I—Performance Check verifies electrical specifications without removing instrument covers or making internal adjustments.

A separate Real-Time Functions Checkout Procedure is provided in the 7854 Operators Manual. Also, each waveform-processor function is demonstrated in the Measurement Keyboard and Waveform Calculator sections of the Operators Manual (refer to Table of Contents or Command Index for specific functions).

INDEX TO ADJUSTMENT AND PERFORMANCE CHECK PROCEDURE

A. POWER SUPPLY 4-44
1. Preliminary Setup Conditions 4-44
2. Adjust +50 Volt Power Supply 4-44
3. Adjust Preregulator 4-45
4. Examine Power Supply Voltages 4-45

B. Z-AXIS AND DISPLAY 4-47
1. Preliminary Setup Conditions 4-47
2. Adjust HV Supply 4-47
3. Adjust Z-Axis DC Levels 4-48
4. Adjust Z-Axis Transient Response 4-49
5. Adjust Good Sample Flip Flop 4-50
6. Adjust Focus Level 4-50
7. Adjust Contrast 4-51
8. Adjust Trace Alignment, Geometry, and Focus 4-51
9. Adjust CRT Gid Bias 4-52
10. Adjust Auto-Focus Amplifier Gain 4-53
11. Check External Z-Axis Operation 4-53

C. CALIBRATOR AND OUTPUT SIGNALS 4-54
1. Preliminary Setup Conditions 4-54
2. Check/Adjust Calibrator Output Voltage 4-54
3. Check/Adjust Calibrator 1 kHz Repetition Rate 4-55
4. Check Calibrator Amplitude 4-56
5. Check ± Sawtooth Output 4-57
6. Check + Gate Output 4-57
7. Check Single Sweep Reset and Camera Connector 4-58
8. Check TTL Signal Output 4-59

D. TRIGGER SYSTEM 4-60
1. Preliminary Setup Conditions 4-60
2. Adjust A Trigger Centering and Gain 4-60
3. Adjust B Trigger Centering and Gain 4-62
4. Check/Adjust Vertical Signal Out DC Centering 4-63
5. Check Trigger Selector Operation 4-64

E. HORIZONTAL SYSTEM 4-66
1. Preliminary Setup Conditions 4-66
2. Check/Adjust Horizontal Amplifier Gain and Readout Jitter 4-66
3. Check/Adjust 1 MS Linearity and High-Frequency Timing 4-68
4. Check X-Y Phasing 4-69
5. Check/Adjust X-Y Compensation (Option 2 Only) 4-70

F. VERTICAL SYSTEM 4-71
1. Preliminary Setup Conditions 4-71
2. Adjust Vertical Centering 4-71
3. Adjust Vertical Amplifier Thermal Compensations 4-72
4. Adjust Vertical Channel Switch Compensations 4-73
5. Check/Adjust Vertical Gain 4-74
6. Check Vertical Low-Frequency Linearity 4-75
7. Adjust High-Frequency Compensation 4-75
8. Examine Vertical Amplifier Bandwidth 4-76
9. Check Vertical Channel Isolation 4-77
10. Examine Vertical Display Modes 4-78
11. Examine Vertical Trace Seperation 4-78

GA. DISPLAY SYSTEM 4-79
1. Preliminary Setup Conditions 4-79
2. Waveform/Readout Centering and Gain Adjustment 4-79
3. Vector Offset and Gain Adjustment 4-80
4. Waveform Vector Timing Adjustment 4-81
5. Character Display Adjustment 4-82

GB. DISPLAY SYSTEM 4-83
1. Preliminary Setup Conditions 4-83
2. Adjust Display Offsets and Gains 4-84
3. Adjust Vector Offsets and Gains 4-85
4. Adjust Character Display 4-85

http://manoman.sqhill.com

GC. DISPLAY SYSTEM (OPTION OD ONLY)..... 4-87
1. Preliminary Setup Conditions 4-87
2. Preset Character Display 4-87
3. Adjust Display Horizontal Centering and Gain 4-88
4. Adjust Display Vertical Centering and Gain 4-88
5. Adjust Character Display 4-89

H. VERTICAL AND HORIZONTAL PICKOFF SYSTEM 4-90
1. Preliminary Setup Conditions 4-90
2. Adjust Digitizer LSB Match and LSB Code 4-90
3. Adjust Vertical and Horizontal Pickoff Amplifier Centering 4-91
4. Check/Adjust Vertical Sampler Offset ... 4-92
5. Check/Adjust Horizontal Sampler Offset . 4-93
6. Adjust Digitizer Horizontal Matching 4-94
7. Adjust Vertical Step Response..... 4-95
8. Check/Adjust Digitizer Vertical Gain 4-97
9. Examine Digitizer Bandwidth 4-98
10. Adjust Horizontal Unity Dot Response ... 4-99
11. Check/Adjust Digitizer Horizontal Gain 4-100
12. Examine Digitizer 1 MS Linearity..... 4-101
13. Check Vertical Digitizer Numeric Noise .. 4-101
14. Check Horizontal Digitizer Numeric Noise 4-102

I. CALCULATOR KEYBOARD..... 4-104
1. Preliminary Setup Conditions 4-104
2. Examine Keyboard Addressing 4-104

ADJUSTMENT AND PERFORMANCE CHECK POWER-UP SEQUENCE

NOTE

The performance of this instrument can be checked at any ambient temperature from 0° to +50° C unless otherwise stated. Adjustments must be performed at an ambient temperature between +20° and +30° C for specified accuracies.

1. Check that the instrument has been set for the proper power source and also that a suitable power cord and plug has been attached. Refer to Power Source Information in Section 1 for specific details.

2. Remove cabinet panels to gain access to internal adjustments and test points.

3. Connect the instrument to the power source.

4. Connect the memory backup battery to the MEMORY BACKUP POWER INPUT. MEMORY BACKUP POWER must not be connected when doing Display procedure steps GA4, GB3 and GB5.

5. Press the POWER button and allow 20 minutes warmup before proceeding.

CAUTION

To prevent instrument damage, turn off 7854 POWER before installing or removing plug-in units.

NOTE

To maintain the front-panel mode settings when switching plug-ins with POWER OFF, external power must be applied to the rear-panel MEMORY BACKUP POWER INPUT.

http://manoman.sqhill.com

A. POWER SUPPLY

Equipment Required: (Numbers correspond to those listed in Table 4-3, Test Equipment).

6. Plug-in extender (optional for this procedure)
8. Precision DC Voltmeter (DVM)
20. Low-capacitance screwdriver
21. Phillips screwdriver

Shaded lines identify Performance Requirement CHECK.

A1. POWER SUPPLY PRELIMINARY SETUP

a. Perform the Adjustment and Performance Check Power-Up Sequence.

b. Refer to Section 5, Instrument Options, and the Change Information at the rear of this manual for any modifications which may affect this procedure.

c. See the **TEST POINT AND ADJUSTMENT LOCATIONS A** foldout page in Section 7, Diagrams and Circuit Board Illustrations.

d. Set the 7854 controls as follows:

POWER ..... On (pushbutton in)
VERTICAL MODE ..... LEFT
VERT TRACE SEPARATION (B) ..... Midrange
A TRIGGER SOURCE ..... VERT MODE
A INTENSITY ..... Fully counterclockwise
HORIZONTAL MODE ..... A
B INTENSITY ..... Fully counterclockwise
B TRIGGER SOURCE ..... VERT MODE
FOCUS ..... Midrange
READOUT intensity ..... OFF (in detent)
GRAT ILLUM ..... Fully counterclockwise
CONTROL ILLUM ..... MEDIUM (rear panel)

A2. ADJUST PREREGULATOR (A12R23)

NOTE

First perform step A1, then proceed.

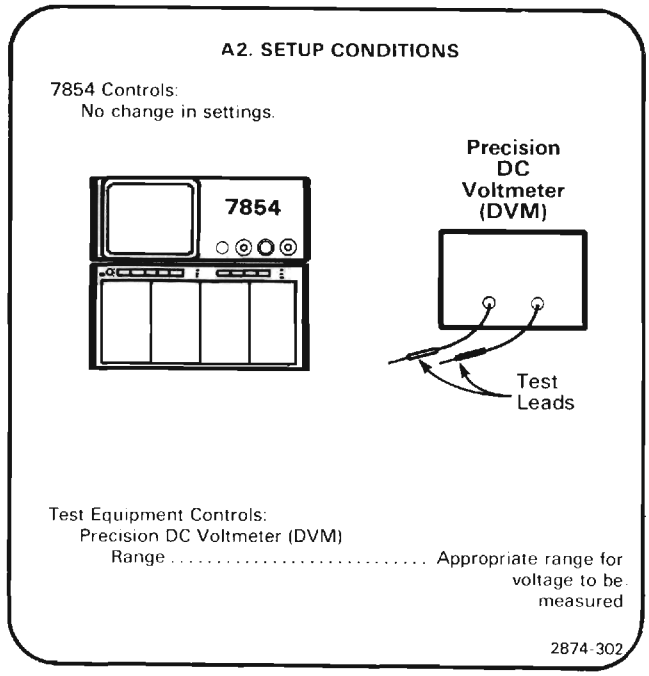

a. Connect the precision dc voltmeter (DVM) between TP126 (located on Control Rectifier Board A12) and chassis ground. (Access to TP126 is through Pre Reg Adj hole in the bottom of the power unit.)

b. **EXAMINE**—Meter reading for +108 volts within the limits of +107.5 to +108.5 volts. If the meter reading is within the given tolerance, proceed to step A3.

c. **ADJUST**—Pre Reg Adj R93 (located on Control Rectifier Board A12) for a meter reading of +108 volts.

d. **INTERACTION**—Any change in the setting of R93 may affect the adjustment of R15 given in step A3.

http://manoman.sqhill.com

A3. ADJUST +50 VOLT POWER SUPPLY (A22R15)

NOTE

If the preceding step was not performed, first perform step A1, then proceed.

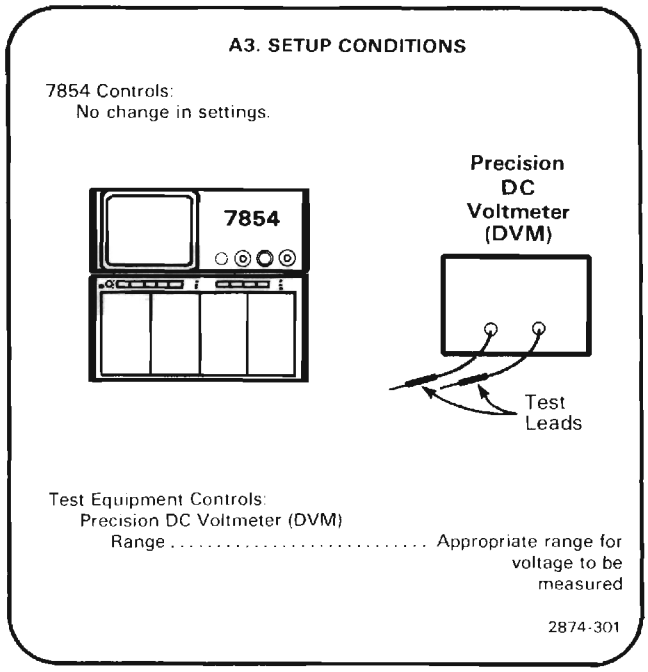

WARNING

Extreme caution must be used when operating the 7854 with the power unit removed due to the line voltage, high voltage, and high currents present.

NOTE

The Power Supply voltages can be checked without removing the power unit by using the 7000-series plug-in extender (rigid), Tektronix part 067-0589-00.

a. Set POWER switch to OFF and disconnect the line cord from the power source. Remove any plug-in units from the plug-in compartments. Expose the 7854 power supply adjustments and test points by removing the power unit from the rear of the 7854 (interconnecting cables remain connected). See the Maintenance section in this manual for power unit removal instructions.

b. Connect the line cord to the power source and press the POWER button.

c. Connect the precision dc voltmeter (DVM) between TP -50 V Sense and TP Gnd Sense on the Low-Voltage Regulator circuit board A22.

d. **EXAMINE**—The meter reading for -50 volts, within the limits of -49.8 to -50.2 volts.

e. **ADJUST**—The +50 V adjustment R15 (located on the Low Voltage Regulator Board A22) for a meter reading of -50 volts.

f. **INTERACTION**—Any change in the setting of R15 may affect the operation of all circuits in the instrument.

A4. EXAMINE POWER SUPPLY VOLTAGES

NOTE

If the preceding step was not performed, first perform step A1, then proceed.

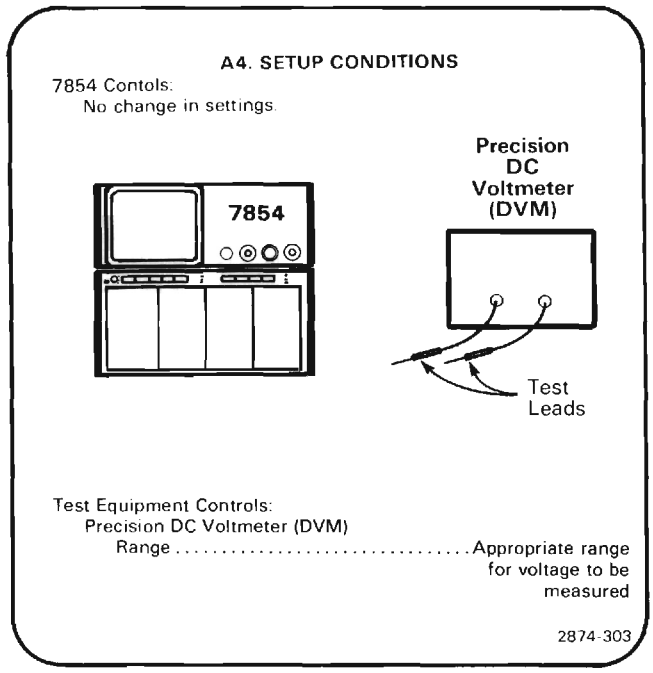

a. **EXAMINE**—Table 4-4 lists the low-voltage power supplies in this instrument. Check each supply with the DVM (precision dc voltmeter) for output voltage within the given tolerance. Connect meter common lead to TP Gnd Sense. Test points are located on the Low-Voltage Regulator Board A22.

b. **INTERACTION**—If the power supplies are not within the tolerances given in Table 4-4, repeat steps A1 and A2.

http://manoman.sqhill.com

c. Disconnect the precision dc voltmeter.

NOTE

Regulation of the individual power supplies can be checked using the procedure given under Troubleshooting Techniques in the Maintenance section.

d. Disconnect the line cord from the power source.

e. Reinstall the power unit and reconnect the line cord.

TABLE 4-4
Power Supply Tolerance

Power Supply	Output Voltage Limits
TP -50 V Sense (-50S)	-49.8 to -50.2 volts
TP -15 V Sense (-15S)	-14.85 to -15.15 volts
TP +5 V Sense (+5S)	+4.9 to +5.1 volts
TP +15 V Sense (+15S)	+14.85 to +15.15 volts
TP +50 V Sense (+50S)	+49.5 to +50.5 volts

http://manoman.sqhill.com

B. Z-AXIS AND DISPLAY

Equipment Required: (Numbers correspond to those listed in Table 4-3, Test Equipment.)

1. Test oscilloscope
2. Amplifier unit
4. Time base (two required)
8. Precision dc voltmeter (DVM)
10. Low-frequency sine-wave generator
13. 10X probe with short grounding strap
14. Coaxial cable (two 42-inch required)
17. Bnc-T connector
18. Screwdriver
19. Nylon tuning tool
20. Low-capacitance screwdriver
21. Phillips head screwdriver
24. Battery (memory backup)

Shaded lines identify Performance Requirement CHECK.

B1. Z-AXIS AND DISPLAY PRELIMINARY SETUP

a. Perform the Adjustment and Performance Check Power-Up Sequence.

b. Refer to Section 5, Instrument Options, and the Change Information at the rear of this manual for any modifications which may affect this procedure.

c. See the **TEST POINT AND ADJUSTMENT LOCATIONS B** foldout page in Section 7, Diagrams and Circuit Board Illustrations.

d. Set the POWER switch to OFF; remove the blue rear-panel cabinet cover (secured by 4 screws) and disconnect the 4 attached cables, noting their location and orientation for re-installation.

e. Set the 7854 controls as follows:

POWER ..... On (pushbutton in)
VERTICAL MODE ..... LEFT
VERT TRACE SEPARATION (B) ..... Midrange
A TRIGGER SOURCE ..... VERT MODE
A INTENSITY ..... Fully counterclockwise
HORIZONTAL MODE ..... A
B INTENSITY ..... Fully counterclockwise
B TRIGGER SOURCE ..... VERT MODE
FOCUS ..... Midrange
READOUT ..... OFF (in detent)
GRAT ILLUM ..... Midrange
CONTROL ILLUM ..... MEDIUM (rear panel)
STORED INTENSITY ..... Fully counterclockwise

WARNING

Extreme caution must be used when making the following adjustments due to the dangerous potentials present.

B2. ADJUST HV SUPPLY (A20R115)

NOTE

First perform step B1, then proceed.

B2. SETUP CONDITIONS

7854 Controls:
No change in setting.

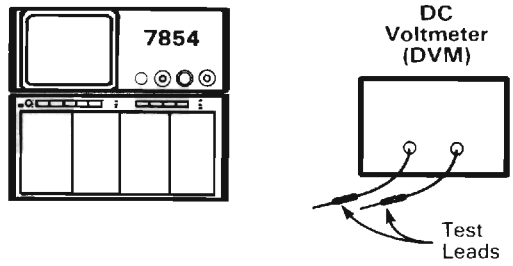

Test Equipment Controls:
Precision DC Voltmeter(DVM) ..... Appropriate range for voltage to be measured

2874-304

a. Temporarily set the POWER switch to OFF and remove the High Voltage Board shield (secured by 3 screws). Connect the precision dc voltmeter (DVM), set to measure at least +130 volts, between TP127 (located High Voltage Board A20) and chassis ground.

http://manoman.sqhill.com

b. Press the POWER button to on.

c. **EXAMINE**—Voltmeter reading for 96 to 104 volts.

d. **ADJUST**—HV Adj, R115 (located on High Voltage Board A20) for 100 volts on the voltmeter.

e. Press POWER button to OFF.

f. Remove the DVM test leads and re-install the High Voltage Board shield.

g. Press POWER button to on.

B3. ADJUST Z-AXIS DC LEVELS (A14R165, (A21R135, A21R125)

NOTE

If the preceding step was not performed, first perform step B1, then proceed.

B3. SETUP CONDITIONS

7854 Controls:
HORIZONTAL ..... A

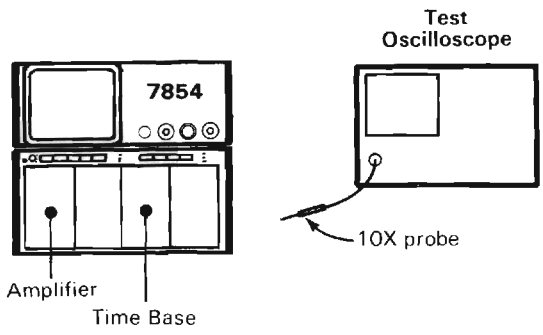

Test Equipment Controls:
Test Oscilloscope
Vertical Deflection Factor 50mv/div
Sweep Rate 20μs/div
Input Coupling ..... AC

A Time Base
Sweep Rate 50μs/div
Triggering ..... Auto,Ac,Interval

Amplifer
Position ..... off screen

2874-305

a. Connect the 10X probe from the test oscilloscope to TP122 (located on the Z-Axis board A21) and the probe ground to chassis ground. Obtain a stable test oscilloscope display.

b. **EXAMINE**—Test oscilloscope display for an 80 millivolt peak-to-peak signal, within 10 millivolts.

c. ADJUST—Z-Axis Level, R165 (located on Logic Board (A14) for an 80 millivolt peak-to-peak display.

d. Move the time-base unit to the B HORIZ compartment.

e. Set the HORIZONTAL MODE switch to B.

f. **EXAMINE**—Test oscilloscope display for an 80 millivolt peak-to-peak signal, within 10 millivolts.

g. **ADJUST**—If necessary, compromise the setting of the Z-Axis Level adjustment, R165, for an 80-millivolt signal, within 10 millivolts for both the A HORIZ and B HORIZ compartments. Re-install the time-base unit in the B HORIZ compartment and set the HORIZONTAL MODE switch to B.

h. Set the test oscilloscope's deflection factor to 1 volt/div (10 volt/div at probe tip) and its input coupling to ground. Move this ground reference trace to the bottom graticule of the test oscilloscope display. Return the test oscilloscope input coupling to dc.

i. Connect the test oscilloscope 10X probe to TP183 (located on the Z-Axis Board) with the probe ground connected to chassis ground.

j. Set the 7854 B INTENSITY control fully clockwise.

k. **EXAMINE**—Test oscilloscope display for a waveform baseline between 8 and 12 volts above ground reference.

l. **ADJUST**—The Output Level adjustment, R135 (located on the Z-Axis Board A21), for a waveform base line at 10 volts above ground reference.

m. **EXAMINE**—The test oscilloscope display for a 68 to 72 volt peak-to-peak waveform. (Do not move the test oscilloscope vertical Position control.)

n. **ADJUST**—The Z-Axis Ampl Gain adjustment, R125 (located on the Z-Axis Board A21) for a 70 volt peak-to-peak waveform displayed on the test oscilloscope.

o. **INTERACTION**—Repeat parts (k) through (n) until the waveform is within the limits specified in parts (k) and (m).

p. Disconnect the probe.

NOTE

If further adjustment of the Z-Axis system is required, omit the remainder of this step.

q. Press POWER switch to OFF.

r. Reinstall the rear panel cover and its cables, making sure the fan is free to turn.

s. Press POWER switch to on.

http://manoman.sqhill.com

B4. ADJUST Z-AXIS TRANSIENT RESPONSE (A21C180, A21C150, A21C155, A21R150, A21R155)

NOTE

If the preceding step was not performed, first perform step B1, then proceed.

B4.SETUP CONDITIONS

7854 Controls:
- HORIZONTAL MODE ..... B
- A INTENSITY ..... fully clockwise
- B INTENSITY ..... fully clockwise

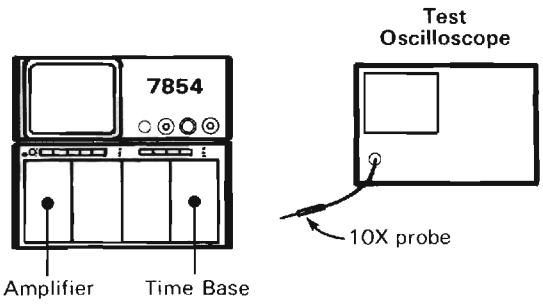

Test Equipment Controls:
- Test Oscilloscope
  - Sweep Rate ..... 0.1 μs/div
  - Vertical Deflection 50mV/div
  - Variable ..... uncal
- B Time Base Unit
  - Sweep Rate 50ns/div
- Triggering ..... Auto,Ac,External
- Amplifier
  - Position ..... off screen

a. Connect the test oscilloscope 10X probe tip to TP186 (located on Z-Axis Board A21) and the probe ground to chassis ground.

b. With the test oscilloscope triggered on the positive edge of the signal, use the test oscilloscope's variable Gain and Position controls to obtain an 8-division display centered on the graticule.

c. Set the 7854 B INTENSITY control for a 6-division display on the test oscilloscope. Position the display to view the leading edge of the waveform at the center graticule lines.

d. **EXAMINE**—The test oscilloscope display for optimum square corner and flat top on the displayed pulse. Aberrations should be less than 3% peak-to-peak (0.18 division).

e. **ADJUST**—Comp 5 (C180) for flat top; and Comp 1 (C150), Comp 2 (R150), Comp 3 (R155), and Comp 4 C155 (located on the Z-Axis Board A21) for optimum square corner of the displayed pulse (use low-capacitance screwdriver to adjust variable capacitors).

f. Set the B INTENSITY control for 1.5 divisions of display on the test oscilloscope.

g. **EXAMINE**—Test oscilloscope display for less than 3% aberration.

h. **ADJUST**—R150 and C150 (located on the Z-Axis Board A21) for optimum square corner at 1.5 divisions of displayed pulse.

i. Set the B INTENSITY control for a 6-division display on the test oscilloscope.

j. Set the test oscilloscope sweep rate to 10 ns/division.

k. **EXAMINE**—The pulse risetime for 9 to 15 nanoseconds (measured between the 10% and 90% point of the pulse).

l. **INTERACTION**—The adjustments in parts e and h affect the pulse risetime. If risetime is not within the stated limits, repeat parts (e) through (k).

m. Disconnect the probe.

http://manoman.sqhill.com

B5. AJUST GOOD SAMPLE FLIP FLOP (A21R102)

NOTE

If the preceding step was not performed, first perform step B1, then proceed.

B5. SETUP CONDITIONS

7854 Controls:
HORIZONTAL MODE ..... A
A INTENSITY ..... midrange

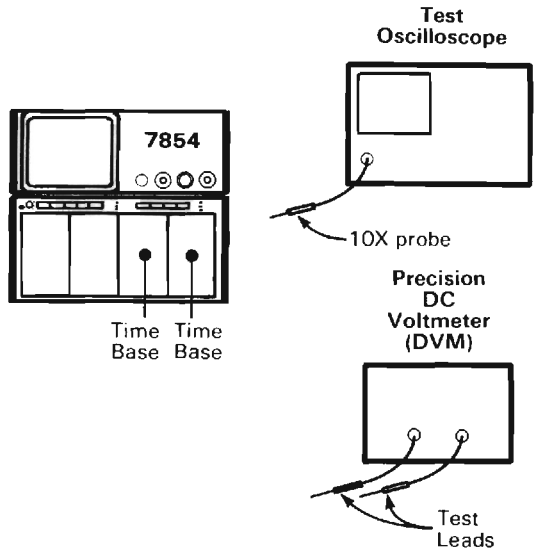

Test Equipment Controls:
A and B Time Base Units
Sweep Rate 1ms/div
Triggering ..... Auto,Ac,External

2874-345

a. Obtain a free running display on the 7854; then set the A and B INTENSITY controls fully counterclockwise.

b. Remove the time base from the A HORIZ compartment.

c. Set the precision dc voltmeter to read at least 2 volts dc.

d. Connect the precision dc voltmeter to TP122 (on the Z-Axis Board A21) and chassis ground.

e. Note the dc voltage level at TP122 for comparison in part g.

f. Move the precision dc voltmeter probe to TP103 (on the Z-Axis Board A21).

g. **EXAMINE**—The GSF level at TP103 for a reading of 40 mV less than thtat noted in part e, within 10 millivolts.

h. **ADJUST**—GSF Level, R102 (locaated on Z-Axis Board A21) for a reading of 40 mV less than that noted in part e.

i. Re-install the time base in the A HORIZ compartment.

j. Set the HORIZONTAL MODE switch to B.

k. Remove the precision dc voltmeter leads.

l. Set the test oscilloscope for a calibrated sweep rate of 2ms/div and a 0 2V/div deflection factor (2v at probe tip).

m. Connect the 10X probe to TP106 (located on Z-Axis Board A21) and chassis ground.

n. **EXAMINE**—Test oscilloscope display for a TTL level square wave (HI > 2.4 volts, LO < 0.4 volt).

o. **EXAMINE**—Rotate the B INTENSITY control through its range and observe test oscilloscope for a stable display.

p. **INTERACTION**—If the requirements in parts n and o are not met, compromise the adjustment of the GSF Level, R102, for a stable TTL square wave for both A HORIZ and B HORIZ compartments while rotating the A INTENSITY and B INTENSITY controls throughout their range.

q. Disconnect the probe.

B6. ADJUST FOCUS LEVEL (A21R70)

NOTE

If the preceding step was not performed, first perform step B1, then proceed.

B6. SETUP CONDITIONS

7854 Controls:
B INTENSITY ..... fully counterclockwise

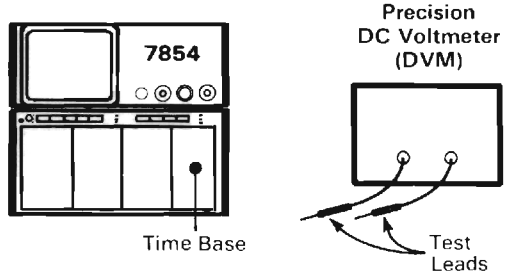

Test Equipment Controls:
Time Base
Sweep Rate ..... 1 ms/div
Triggering ..... Auto,Ac,External

Precision DC Voltmeter
Range ..... 200 volts or greater

2874-308

http://manoman.sqhill.com

a. Connect the precision dc voltmeter (DVM), set to measure 200 volts, between TP83 (located on Z-Axis Board A21) and chassis ground.

b. **EXAMINE**—Voltmeter reading for 120 to 126 volts.

c. **ADJUST**—Focus Output Level, R70 (located on Z-Axis Board A21), for a voltmeter reading of 123 volts.

d. Remove the DVM test leads.

B7. ADJUST CONTRAST (A6R80)

NOTE

If the preceding step was not performed, first perform step B1, then proceed.

B7. SETUP CONTROLS

7854 Controls:
- HORIZONTAL MODE ..... A
- A INTENSITY ..... Midrange
- CALIBRATOR 4V

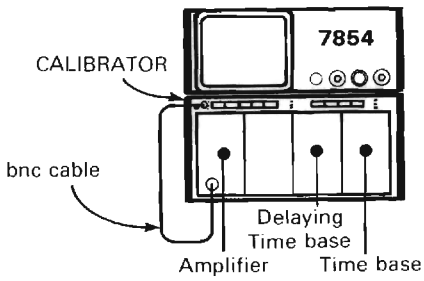

Test Equipment Controls:
- Amplifier Unit
  - Deflection Factor ..... 1 v/div
- Time Base
  - Sweep Rate ..... 20 μs/div
  - Triggering ..... Auto,Ac,Internal
- Delaying Time Base
  - Sweep Rate ..... 0.2 ms/div
  - Triggering ..... Auto,Ac,Internal
  - B Delay Mode ..... B Starts After Div
  - Delay Time ..... Midrange

2874-353

a. Center the square-wave display on the crt graticule using the amplifier Position control and set the A INTENSITY control for a normal viewing level.

b. Set the delaying time-base unit Triggering controls for a stable display.

c. Set the delaying time-base unit Delay Time control to mid-range.

d. **EXAMINE**—The crt display while rotating the CONTRAST adjustment, R80 (front-panel screwdriver adjustment), through its entire range. Notice the change in the intensity of the "intensified" portion of the waveform.

e. **ADJUST**– The CONTRAST adjustment, R80, for a well defined intensified zone on the displayed trace.

B8. ADJUST TRACE ALIGNMENT, GEOMETRY AND FOCUS (A20R155, A20R55, A6R160, A20R143,A16R148, A6R142)

NOTE

If the preceding step was not performed, first perform step B1, then proceed.

B8. SETUP CONDITIONS

7854 Controls:
- VERTICAL MODE ..... ALT
- HORIZONTAL MODE ..... CHOP
- A and B INTENSITY ..... Midrange

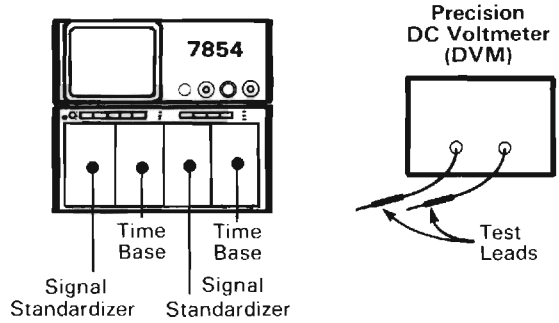

Test Equipment Controls:
- LEFT and A Signal Standardizer Units
  - Test Selector Switch ..... Vert or Horiz Gain
  - Rep Rate ..... 100 KHz
- RIGHT and B Time Base Units
  - Sweep Rate ..... 2 μs/div
  - Triggering ..... Auto,Ac,External
- Precision DC Voltmeter (DVM)
  - Range ..... Appropriate range for voltage to be measured

2874-309

a. Set both Signal Standardizer Position controls to superimpose the crosshatch display over the vertical and horizontal graticule center lines.

b. Set FOCUS control to midrange.

c. Temporarily set the POWER switch to OFF and remove the High Voltage Board shield (secured by 3 screws). Connect the precision dc voltmeter (DVM), set to measure at least +36 volts, between TP156 (on the High Voltage Board A20) and chassis ground.

d. Press the POWER button to on.

e. Set the VERTICAL MODE switch to ALT and the HORIZONTAL MODE switch to CHOP.

f. **EXAMINE**—Voltmeter reading for +34 to +36 volts.

http://manoman.sqhill.com

g. **ADJUST**—Shield Volts, R155 (on the High Voltage Board A20), for +34.5 volts on the DVM.

h. **ADJUST**—The Focus Preset, R55 (on the High-Voltage Board A20), and the front-panel ASTIG adjustment, R160 (on the Pot Adjust Board A6), for the best overall resolution of the traces.

i. **INTERACTION**—Poor focus at one edge of the display may be improved by compromising the Shield Volts and Focus Preset adjustments, parts (g) and (h).

j. Disconnect the precision dc voltmeter (DVM).

k. Set the front-panel FOCUS and INTENSITY controls for a well-defined display.

l. **EXAMINE**—That the vertical and horizontal traces which cross at graticule center are aligned with the graticule, vertical and horizontal center, lines within 0.1 division.

m. **ADJUST**—The Y-Axis Align, adjustment, R148 (on the Pot Adjust Board A6) and the front-panel TRACE ROTATION adjustment, R142 (on the Pot Adjust Board A6) to align the vertical and horizontal traces with the graticule horizontal and vertical center lines. (The Y-Axis Align adjustment, R148, is accessible, using a thin bladed screwdriver, through the top of the instrument near the front of the instrument's carrying handle.)

n. **EXAMINE**—The horizontal trace at the top and bottom of the graticule for 0.1 division or less of bowing or tilt.

o. **ADJUST**—Geom, R143 (on the High Voltage Board A20), for minimum bowing of the traces at the top and bottom of the graticule.

p. Press the POWER button to OFF and re-install the High Voltage Board shield.

q. Press the POWER button to on.

B9. ADJUST CRT GRID BIAS (A20R65)

NOTE

If the preceding step was not performed, first perform step B1, then proceed.

B9. SETUP CONDITIONS

7854 Controls:
- VERTICAL MODE ..... LEFT
- HORIZONTAL MODE ..... A
- A and B INTENSITY ..... fully counterclockwise
- GRAT ILLUM ..... fully counterclockwise

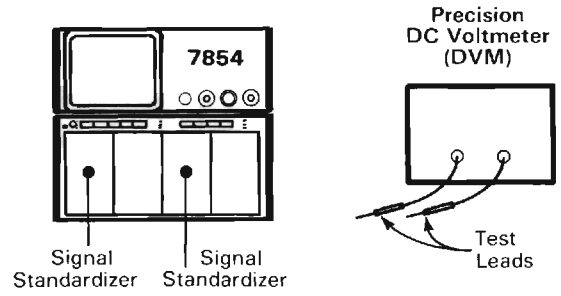

Test Equipment Controls:
- Signal Standardizer Units
  - Test Selector Switch ..... Vert or Horiz Freq Resp
  - Position ..... midrange
- Precision DC Voltmeter
  - Range ..... 20 V

2874-310

a. Connect the precision dc voltmeter (DVM) between test point TP183 (located on Z-Axis Board A21) and chassis ground and note the voltage reading.

b. **EXAMINE**—Crt display while advancing the A INTENSITY control setting. A spot on the crt should become barely visible at 3.6V to 4.4V above the voltage noted in step a.

c. Set the A INTENSITY control so that the dc voltage at TP183 is 4 volts above the voltage noted in part a.

d. **ADJUST**—The Grid Bias Adjustment R65 (located on High Voltage Board A20) to barely extinguish the spot on the crt.

e. Disconnect the DVM.

http://manoman.sqhill.com

B10. ADJUST AUTO-FOCUS AMPLIFIER GAIN (A21R63)

NOTE

If the preceding step was not performed, first perform step B1, then proceed.

B10. SETUP CONDITIONS

7854 Controls:
A INTENSITY ..... fully clockwise

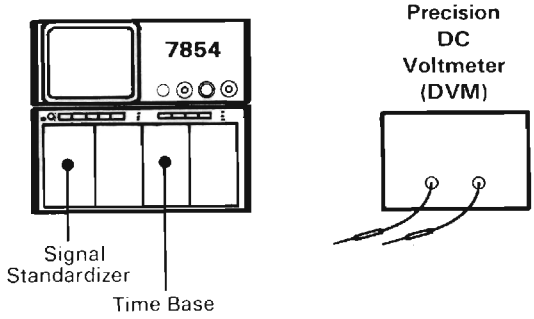

Test Equipment Controls:
Time Base
Sweep Rate ..... 10 ns/div
Triggering ..... Auto,Ac,Internal

Signal Standardizer
Test Selector Switch ..... Vert or Horiz +Step
Rep Rate ..... 1 MHz

Precision Dc Voltmeter (DVM)
Range ..... 200 V

2874-359A

a. Connect the precision dc voltmeter (DVM) between TP83 (on the Z-Axis Board A21) and ground.

b. Set the Signal Standardizer Amplitude and Position controls for a 3-division square wave, centered on the crt.

c. Set the time base Triggering controls for a stable display triggered on the rising edge.

d. **EXAMINE**—The crt display for objectionable defocusing of the crt display.

e. **ADJUST**—Focus Gain adjustment, R63 (on the Z-Axis Board A21), for optimum focusing of the high-intensity trace.

f. **EXAMINE**—Voltmeter reading should be greater than (more positive) -12 volts.

g. **ADJUST**—If optimum focus of trace occurs below (more negative) -12 volts, compromise the setting of R63 until voltmeter reading is -12 volts.

h. Disconnect the DVM.

B11. CHECK EXTERNAL Z-AXIS OPERATION

NOTE

If the preceding step was not performed, first perform step B1, then proceed.

B11. SETUP CONDITIONS

7854 Controls:
READOUT intensity ..... OFF (in detent)
HORIZONTAL MODE ..... A
A INTENSITY ..... midrange

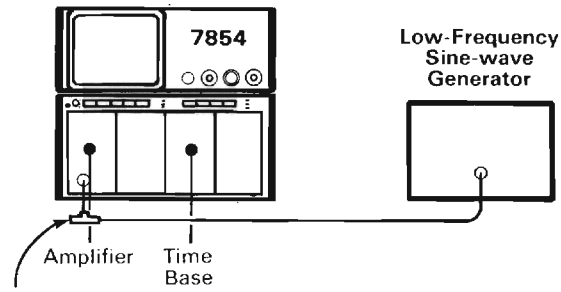

Test Equipment Controls:
Amplifier Unit
Deflection Factor ..... 0.5 V/div

Time Base
Sweep Rate ..... 20 μs/div
Triggering ..... Auto,Ac,Internal

2874-311

a. Set the low-frequency sine-wave generator for a 4-division display at 50 kilohertz (one volt above and below ground).

b. Set the A INTENSITY control for a dim display.

c. Connect the signal from the output of the bnc T-connector at the Amplifier input to the Z-AXIS INPUT connector on the rear panel with bnc cable.

d. **CHECK**—Positive portion of the displayed waveform is blanked out.

http://manoman.sqhill.com

C. CALIBRATOR AND OUTPUT SIGNALS

Equipment Required: (Numbers correspond to those listed in Table 4-3, Test Equipment.)

1. Test oscilloscope
4 Delaying time base
8. Precision dc voltmeter (DVM)
9. Time-mark generator or frequency counter (optional)
14. Coaxial cable (one 18-inch, two 42-inch required)
15. 50 ohm-terminator
17. Bnc-T connector
20. Low Capacitance Screwdriver
22. Jumper wire
23. Bnc to clip lead adaptor
24. Battery (memory backup)
25. 887 Ω Resistor
26. 909 Ω Resistor

Shaded lines identify Performance Requirement CHECK.

C1. CALIBRATOR AND OUTPUT SIGNALS PRELIMINARY SETUP

a. Perform the Adjustment and Performance Check Power-Up Sequence.

b. Refer to Section 5, Instrument Options, and the Change Information at the rear of this manual for any modifications which may affect this procedure.

c. See the **TEST POINT AND ADJUSTMENT LOCATIONS C** foldout page in Section 7, Diagrams and Circuit Board Illustrations.

d. Set the 7854 controls as follows:

POWER switch ..... On (pushbutton in)
VERTICAL MODE ..... RIGHT
VERT TRACE SEPARATION (B) ..... Midrange
A TRIGGER SOURCE ..... VERT MODE
A INTENSITY ..... Fully counterclockwise
HORIZONTAL MODE ..... A
B INTENSITY ..... Fully counterclockwise
B TRIGGER SOURCE ..... VERT MODE
READOUT intensity ..... OFF (in detent)
GRAT ILLUM ..... Midrange
CALIBRATOR ..... 4 V pushbutton in

C2. CHECK/ADJUST CALIBRATAOR OUTPUT VOLTAGE (A2R25)

NOTE

First perform step C1, then proceed.

C2. SETUP CONDITIONS

7854 Controls:
No change in settings

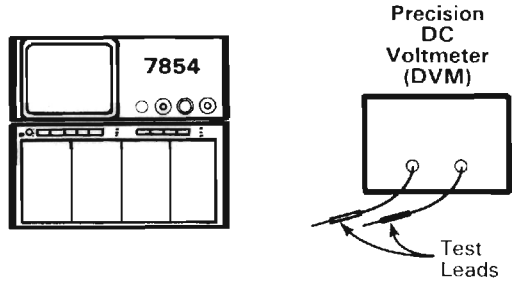

Test Equipment Controls:
Precision DC Voltmeter (DVM)
Range ..... Appropriate range for voltage to be measured

2874-312

a. Set both the 4 V and 0.4 V CALIBRATOR pushbuttons to the pressed position (this selects dc voltage).

b. Connect the precision dc voltmeter (DVM) test leads between the CALIBRATOR output and chassis ground.

http://manoman.sqhill.com

c. **CHECK**—Meter reading for 0.3968 to 0.4048 volt.

d. **ADJUST**—0.4 VDC adjustment, R25 (located on Mode Switch Board A2), for a meter reading of exactly 0.4008 volt. (Access to adjustment is through the chassis, inside the vertical compartments, near the front of the instrument and under the VERTICAL MODE switch.)

e. Disconnect the DVM and terminator.

f. Connect a 50 ohm terminator to the CALIBRATOR output.

g. Connect the DVM to the terminated CALIBRATOR output.

h. **CHECK**—Meter reading for 0.0397 to 0.0404 volt.

i. **ADJUST**—If necessary, compromise the setting of R25 to meet the tolerances given in parts (c) and (h).

j. Disconnect the DVM.

C3. CHECK/ADJUST CALIBRATOR 1-kHz REPETITION RATE (A2R15)

NOTE

If the preceding step was not performed, first perform step C1, then proceed.

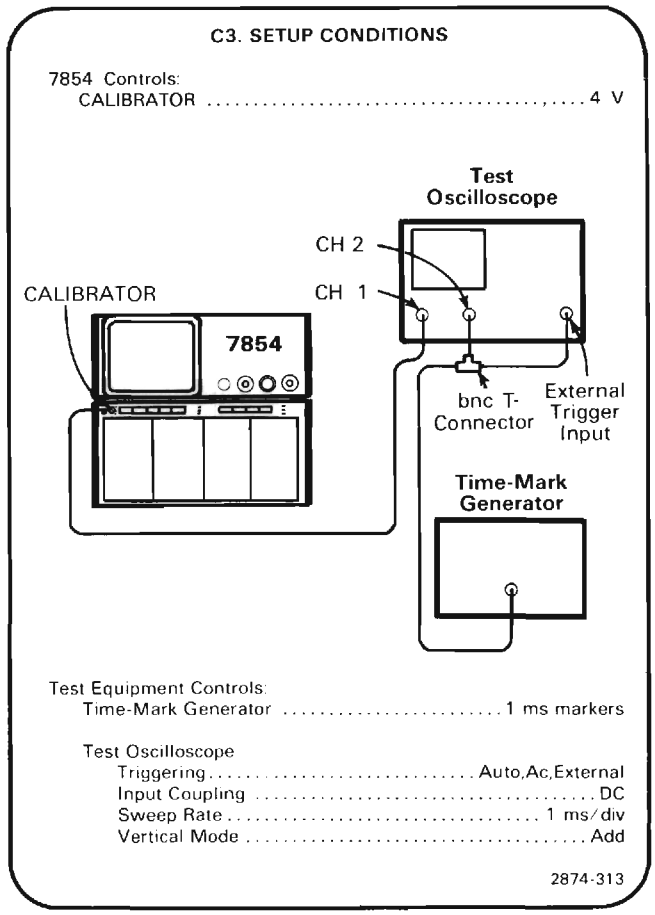

NOTE

An alternate method for step C3 is to use a frequency counter, with at least 0.1% accuracy, and adjust A2R15 for exactly 1 kHz.

a. The 1-millisecond time-markers are connected to the test oscilloscope external trigger input and to the noninverting vertical channel of the test oscilloscope (use a bnc-T connector). The 7854 CALIBRATOR output is connected to the inverting input of the test oscilloscope.

b. Set the test oscilloscope triggering level for a stable time-mark display.

c. Set the test oscilloscope vertical deflection factors to display 2 divisions of CALIBRATOR signal and 1 division of time-marker signal.

http://manoman.sqhill.com

d. Set the test oscilloscope sweep rate for 0.2 second/division.

e. **CHECK**—The time required for the 1-millisecond time marks to drift from the positive level of the CALIBRATOR signal to the negative level, and back to the positive level must be more than 0.4 second (2 divisions). This time can be measured directly from the display by observing the number of divisions that the markers move across the display area before it returns to the positive level.

f. **ADJUST**—1 kHz, R15 (located on the Mode Switch Board A2), for minimum drift (access to the adjustment is through the chassis, inside the vertical compartment).

g. Disconnect the bnc cable.

C4. CHECK CALIBRATOR AMPLITUDE

NOTE

If the preceding step was not performed, first perform step C1, then proceed.

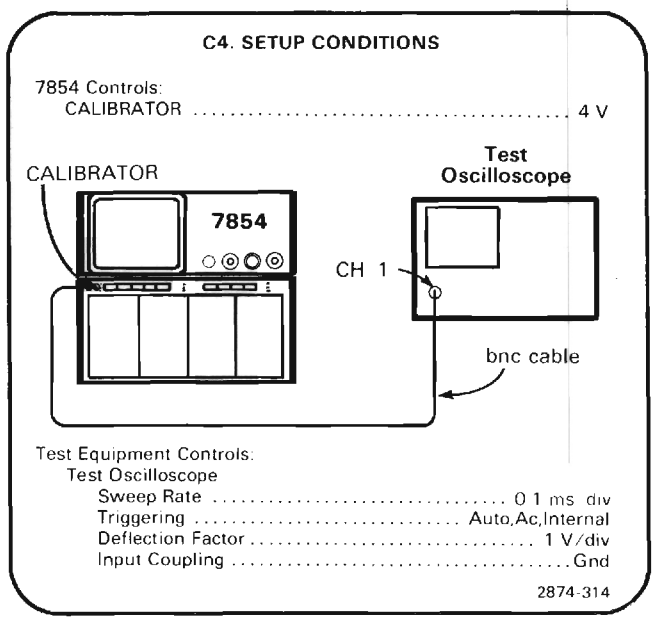

a. Set the ground reference level on the test oscilloscope to 2 divisions below graticule center.

b. Set the test oscilloscope input coupling to dc.

c. **CHECK**—Test oscilloscope for a 4-division display within 0.04 division.

d. Set the CALIBRATOR select switch to 0.4 V.

e. Set the test oscilloscope deflection factor to 0.1 V/division.

f. **CHECK**—Test oscilloscope for a 4-division display within 0.04 division.

g. Set the CALIBRATOR select switch to 40 mV.

h. Set the test oscilloscope deflection factor to 10 mV/division.

i. **CHECK**—Test oscilloscope for a 4-division display within 0.04 division.

j. Install a 50 Ω terminator between the CALIBRATOR output and the bnc cable.

k. Set the test oscilloscope deflection factor to 5 mV/division.

l. **CHECK**—Test oscilloscope for a 0.8 division display within 0.01 division.

m. Set the CALIBRATOR select switch to 0.4 V.

n. Set the test oscilloscope deflection factor to 10 mV/division.

o. **CHECK**—Test oscilloscope for a 4-division display within 0.04 division.

p. Set the CALIBRATOR select switch to 4 V.

q. Set the test oscilloscope deflection factor to 0.1 V/division.

r. **CHECK**—Test oscilloscope for a 4 division display within 0.04 division.

http://manoman.sqhill.com

C5. CHECK +SAWTOOTH OUTPUT

NOTE

If the preceding step was not performed, first perform step C1, then proceed.

C5. SETUP CONDITIONS

7854 Controls:
SWP Selector Switch ..... A (see Test Point and Adjustment Locations C)

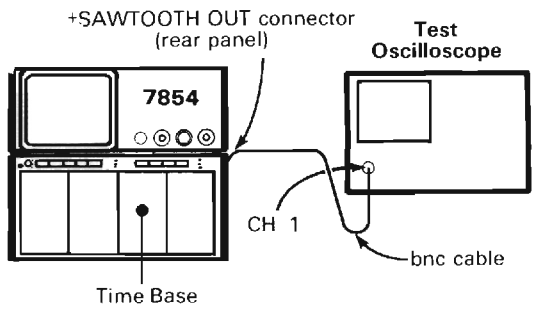

Test Equipment Controls:
Test Oscilloscope
Sweep Rate ..... 2 ms/div
Vertical Deflection ..... 2 V/div (1 MΩ input)

Time Base
Sweep Rate ..... 0.1 ms/div
Triggering ..... Auto,Ac,Internal

2874-315A

a. **CHECK**—That the slope of the test oscilloscope display is positive-going and that the sawtooth baseline is within 1 volt of ground.

b. Move the time-base unit to the 7854's B HORIZ compartment.

c. Set the internal Sweep Selector Switch (S3 on Signal Output Board A15) to the B position (see **TEST POINT AND ADJUSTMENT LOCATIONS C**).

d. **CHECK**—That the test oscilloscope display is positive-going and that the sawtooth baseline is within 1 volt of ground.

e. Disconnect the bnc cable.

C6. CHECK + GATE OUTPUT

NOTE

If the preceding step was not performed, first perform step C1, then proceed.

C6. SETUP CONDITIONS

7854 Controls:
GATE Selector Switch ..... B (see Test Point and Adjustment Locations C)

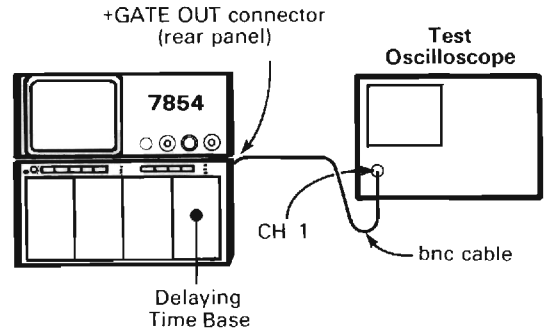

Test Equipment Controls:
Test Oscilloscope
Sweep Rate ..... 2 ms/div
Vertical Deflection ..... 2 V/div (1 MΩ input)

Delaying Time Base
Mode ..... Delaying
Triggering ..... Auto,Ac,Internal
Sweep Rate ..... 0.5 ms/div

2874-316

a. **CHECK**—Test oscilloscope display for a positive-going gate waveform with a baseline at 0 volt, within 1 volt.

b. Move the time-base unit to the A HORIZ compartment.

c. Set the internal Gate Selector Switch (S46 on Signal Output Board A15) to the A position. (see **TEST POINT AND ADJUSTMENT LOCATIONS C**).

d. **CHECK**—Test oscilloscope display for a positive-going gate waveform with a baseline at 0 volt, within 1 volt.

e. Set the internal Gate Selector Switch, S46, to the Dly'd position.

f. **CHECK**—Test oscilloscope display for a positive-going gate waveform with a baseline at 0 volt, within 1 volt.

g. Disconnect the bnc cable.

http://manoman.sqhill.com

C7. CHECK SINGLE SWEEP RESET AND CAMERA CONNECTOR

NOTE

If the preceding step was not performed, first perform step C1, then proceed.

C7. SETUP CONDITIONS

7854 Controls:
HORIZONTAL MODE ..... B

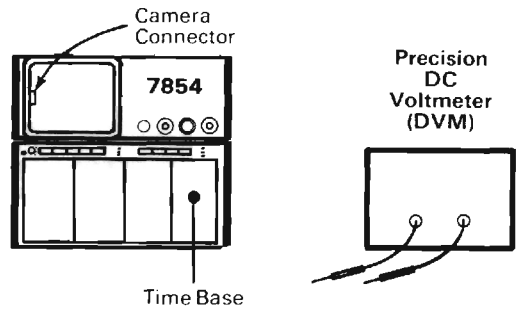

Test Equipment Controls:
Time Base
Sweep Rate ..... 50 ms/div
Triggering ..... Single Swp,Ac,Internal

Precision Dc Voltmeter
Range ..... 20 V

2874-356

a. Connect the precision dc voltmeter between the top pin of the camera connector on the crt bezel and chassis ground.

b. **CHECK**—Voltmeter reading to be +15 volts within 0.15 volt.

c. Connect the precision dc voltmeter between the bottom pin of the camera connector on the crt bezel and chassis ground.

d. **CHECK**—Voltmeter reading to be 0 volt.

e. Momentarily short the center pin of the camera connector on the crt bezel to the bottom pin of the camera connector using the jumper wire.

f. **CHECK**—Time bases Single Sweep Reset Ready indicator should be illuminated.

g. Momentarily short the center pin of the camera connector on the crt bezel to the bottom pin of the camera connector using the jumper wire.

h. **CHECK**—Time bases Trig'd indicator should illuminate and a sweep should occur.

i. Momentarily short the center pin of the rear-panel SINGLE SWEEP RESET bnc connector to ground using the jumper wire.

j. **CHECK**—Time bases Single Sweep Reset Ready indicator should be illuminated.

k. Momentarily short the center pin of the rear-panel SINGLE SWEEP RESET bnc connector to ground using the jumper wire.

l. **CHECK**—Time bases Trig'd indicator should illuminate and a sweep should occur.

http://manoman.sqhill.com

C8. CHECK TTL SIGNAL OUTPUT

NOTE

If the preceding step was not performed, first perform step C1, then proceed.

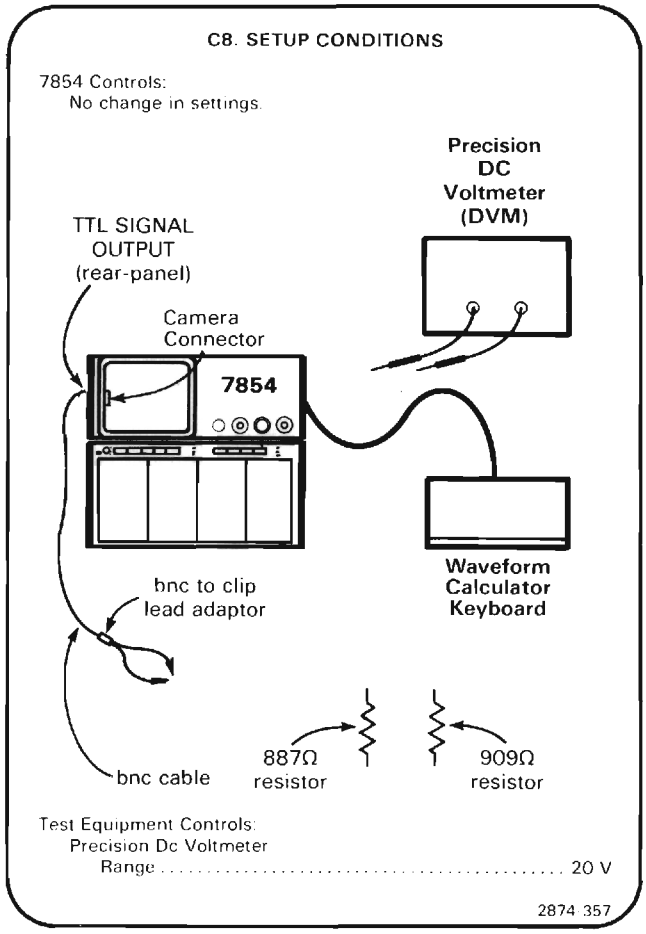

a. Connect a 909 Ω resistor (Tek Part No. 321-0189-00) to the red clip lead.

b. Connect the precision dc voltmeter (DVM) across the clip adaptor, observing clip adaptor polarity.

c. Press the SWL pushbutton on the WAVEFORM CALCULATOR keyboard.

d. Momentarily short the unattached end of the resistor to the upper pin of the camera connector (on crt bezel).

e. **CHECK**—Voltmeter reading to be between 0 volt and +0.8 volt.

f. Remove the 909 Ω resistor and replace it with an 887 Ω resistor (Tek Part No. 321-0188-00).

g. Sequentially press the *f* and SWH pushbuttons on the WAVEFORM CALCULATOR keyboard.

h. Momentarily short the unattached end of the resistor to the lower pin of the camera connector (on crt bezel).

i. **CHECK**—Voltmeter reading to be between +2.4 volts and +5.0 volts.

j. Disconnect bnc cable, clip adaptor and voltmeter.

NOTE

The output at the SIGNAL OUT connector is checked in the Trigger System procedure.

http://manoman.sqhill.com

D. TRIGGER SYSTEM

Equipment Required: (Numbers correspond to those listed in Table 4-3, Test Equipment.)

1. Test oscilloscope
2. Amplifier unit
4. Time base (two required).
5. Signal Standardizer
6. Plug-in extender (rigid calibration fixture)
14. Coaxial cable (one 18-inch, two 42-inch required)
15. 50-ohm terminators (two required)
20. Low capacitance screwdriver
21. Phillips head screwdriver
24. Battery (memory backup)

Shaded lines identify Performance Requirement CHECK.

D1. TRIGGER SYSTEM PRELIMINARY SETUP

a. Perform the Adjustment and Performance Check Power-up Sequence.

b. Refer to Section 5, Instrument Options, and the Change Information at the rear of this manual for any modifications which may affect this procedure.

c. See the **TEST POINT AND ADJUSTMENT LOCATIONS D** foldout page in Section 7, Diagrams and Circuit Board Illustrations.

d. Set the 7854 controls as follows:

POWER switch ..... On
VERTICAL MODE ..... RIGHT
VERT TRACE SEPARATION (B) ..... Midrange
A TRIGGER SOURCE ..... VERT MODE
A INTENSITY ..... Fully counterclockwise
HORIZONTAL MODE ..... A
B INTENSITY ..... Fully counterclockwise
B TRIGGER SOURCE ..... VERT MODE
FOCUS ..... Midrange
READOUT intensity ..... OFF (in detent)
GRAT ILLUM ..... Midrange

D2. ADJUST A TRIGGER SELECTOR CENTERING AND GAIN (A13R586, A13R589)

NOTE

First perform step D1, then proceed.

D2. SETUP CONDITIONS

7854 Controls:
No change in settings.

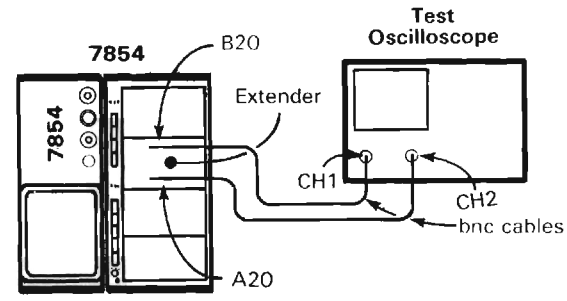

Test Equipment Controls:
Test Oscilloscope
Vertical Deflection
Channel 1 ..... 50 mV/div
Input Coupling ..... Gnd or Off
Channel 2 ..... 50 mV/div
Input Coupling ..... Gnd or Off
Sweep Rate ..... 1 ms/div

2874-317

http://manoman.sqhill.com

WARNING

Extreme caution must be used when operating the 7854 with the power unit removed due to the line voltage, high voltage, and high currents present.

a. Temporarily turn the POWER switch to OFF and disconnect the line cord from the power source. Remove all plug-in units from the plug-in compartments. Expose the 7854 trigger system adjustments and test points by removing the power unit from the rear of the 7854 (interconnecting cables must remain connected) and turning the instrument on its side. See the Maintenance Section in this manual for power unit removal instructions.

b. Connect the line cord to the power source and press POWER button in.

c. Within the plug-in extender, disconnect the top connector on the left and right sides (labeled A20 and B20). Connect each female connector to one of the test oscilloscope vertical channels with the 42-inch 50-ohm bnc cables and 50-ohm bnc terminations (omit the 50-ohm bnc terminations if the test oscilloscope has a 50-ohm input impedance).

d. Set the test oscilloscope for differential operation between the two channels (added display mode with one channel inverted).

e. Establish a ground reference level for the test oscilloscope by positioning its trace to the center horizontal line of the graticule. Do not change the test oscilloscope position controls after setting this ground reference.

f. Set both channels of the test oscilloscope for dc input coupling.

g. Set the 7854's VERTICAL MODE switch to RIGHT and its HORIZONTAL MODE switch to A.

h. **EXAMINE**—Test oscilloscope display for a dc level within 1 division (50 millivolts) of the ground reference level in the LEFT, RIGHT, and ADD positions of the 7854's VERTICAL MODE switch.

i. **ADJUST**—A DC Center R586 (located on Trigger Amplifier Board A13) for a dc level within 1 division (50 millivolts) of the ground reference level in the LEFT, RIGHT, and ADD positions of the VERTICAL MODE switch.

j. Install the Signal Standardizer in the LEFT VERT compartment.

k. Set the VERTICAL MODE switch to LEFT.

l. Set the Signal Standardizer Test selector switch to Trigger Gain and the Rep Rate switch to 10 kHz. Use the Signal Standardizer Position control to move the bright center trace display on the test oscilloscope to the center graticule line.

m. **EXAMINE**—Test oscilloscope display for alignment of the 7 center traces with the center 7 graticule lines within 0.3 division (5%).

n. **ADJUST**—A Gain R589 (located on Trigger Amplifier Board A13) for a test oscilloscope display of 7 traces aligned with the center 7 graticule lines.

NOTE

If R589 did not require adjustment omit parts (o) through (r).

o. Remove the Signal Standardizer from the LEFT VERT compartment.

p. Set the test oscilloscope to alternate between channel 1 and channel 2. Re-establish a ground reference for both channels of the test oscilloscope. When ground references have been established, set both channels for dc coupling and reset the test oscilloscope for differential operation.

q. **EXAMINE**—Test oscilloscope display for a dc level within 1 division (50 millivolts) of the established ground reference.

r. **ADJUST**—A DC Center R586 for a dc level within 1 division (50 millivolts) of the ground reference level.

s. Remove the Signal Standardizer and plug-in extender (leave bnc cables connected if next step is to be performed).

t. If the following step is not to be performed, press the POWER switch to OFF, disconnect the line cord from the power source, and re-install the power supply.

u. Connect the line cord to the power source and press the POWER switch to ON.

http://manoman.sqhill.com

D3. ADJUST B TRIGGER SELECTOR CENTERING AND GAIN (A13R686, A13R689)

NOTE

If the preceding step was not performed, first perform step D1, then proceed.

D3. SETUP CONDITIONS

7854 Controls:
No change in settings.

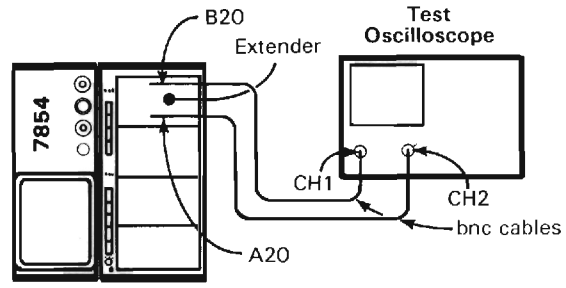

Test Equipment Controls:
Test Oscilloscope
Vertical Deflection
Channel 1 ..... 50 mV/div
Input Coupling .....Gnd or Off
Channel 2 ..... 50 mV/div
Input Coupling .....Gnd or Off
Sweep Rate ..... 1 ms/div

2874-318

NOTE

If the preceding step was performed, omit part (a) through (c) and begin with part (d).

WARNING

Extreme caution must be used when operating the 7854 with the power unit removed due to the line voltage, high voltage, and high currents present.

a. Temporarily turn the POWER switch to OFF and disconnect the line cord from the power source. Remove all plug-in units from the plug-in compartments. Expose the 7854 trigger system adjustments and test points by removing the power unit from the rear of the 7854 (interconnecting cables remain connected). See the Maintenance Section in this manual for power unit removal instructions.

b. Connect the line cord to the power source and press POWER button in.

c. Within the plug-in extender, disconnect the top connector on the left and right sides (labeled A20 and B20). Connect each female connector to one of the test oscilloscope channels with the 42-inch 50-ohm bnc cables and 50-ohm bnc terminations (omit the 50-ohm bnc terminations if the test oscilloscope has a 50-ohm input impedance).

d. Set the test oscilloscope for differential operation between the two channels (added display mode with one channel inverted).

e. Establish a ground reference level for the test oscilloscope by positioning the trace to the center horizontal line of the graticule. Do not change the test oscilloscope position controls after setting this ground reference.

f. Set both channels of the test oscilloscope for dc input coupling.

g. Set the 7854's VERTICAL MODE switch to RIGHT and its HORIZONTAL MODE switch to B.

h. **EXAMINE**—Test oscilloscope display for a dc level within 1 division (50 millivolts) of the ground reference level in the LEFT, RIGHT, and ADD positions of the VERTICAL MODE switch.

i. **ADJUST**—B DC Center, R686 (located on Trigger Amplifier Board A13), for a dc level within 1 division (50 millivolts) of the ground reference level for each of the LEFT, RIGHT, and ADD positions of the VERTICAL MODE switch.

j. Install the Signal Standardizer in the LEFT VERT compartment.

k. Set the VERTICAL MODE switch to LEFT.

l. Set the Signal Standardizer Test selector switch to Trigger Gain and the Rep Rate switch to 10 kHz. Use the Signal Standardizer Position control to move the bright center trace displayed on the test oscilloscope to the center graticule line.

m. **EXAMINE**—Test oscilloscope display for alignment of the center 7 traces with the center 7 graticule lines within 0.3 division (5%).

n. **ADJUST**—B Gain R689 (located on Trigger Amplifier Board A13) for a test oscilloscope display of 7 traces aligned with the center 7 graticule lines.

NOTE

If R689 did not require adjustment omit parts (o) through (r).

o. Remove the Signal Standardizer from the LEFT VERT compartment.

http://manoman.sqhill.com

p. Set the test oscilloscope to alternate between channel 1 and channel 2. Re-establish a ground reference for both channels of the oscilloscope. When ground references have been established, set both channels for dc coupling and reset the test oscilloscope for differential operation.

q. **EXAMINE**—Test oscilloscope display for a dc level within 1 division (50 millivolts) of the established ground reference.

r. **ADJUST**—B DC Center, R686, for a dc level within 1 division (50 millivolts) of the ground reference level.

s. If the following step is not to be performed, press the POWER switch to OFF, disconnect the line cord from the power source, and re-install the power supply.

t. Connect the line cord to the power source and press the POWER switch to ON.

D4. CHECK/ADJUST VERTICAL SIGNAL OUT DC CENTERING (A13R547)

NOTE

If the preceding step was not performed, first perform step D1, then proceed.

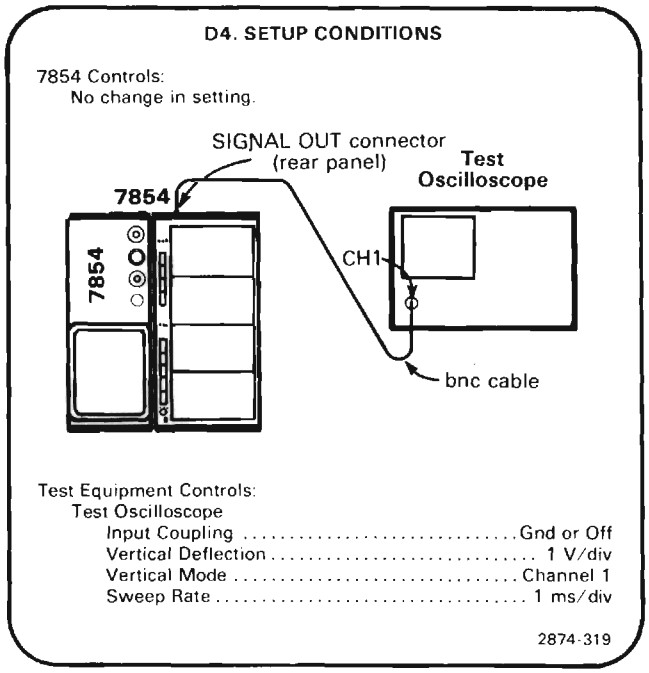

a. Establish a ground reference for the test oscilloscope by positioning the trace to the graticule center line. Do not change the test oscilloscope position control after setting this ground reference.

b. Set the test oscilloscope input coupling switch to dc.

c. **CHECK**—Test oscilloscope display for a dc level within 1 division of the ground reference established in part (a).

d. **ADJUST**—DC Center R547 (located on Trigger Amplifier Board A13) to set the trace to the ground reference level.

e. Press POWER switch to OFF and disconnect the line cord from the power source.

f. Re-install the power supply unit.

g. Connect the line cord to the power source and press the POWER switch to ON.

http://manoman.sqhill.com

D5. CHECK TRIGGER SELECTOR OPERATION

NOTE

If the preceding step was not performed, first perform step D1, then proceed.

D5. SETUP CONDITIONS

7854 Controls:
- VERTICAL MODE ..... LEFT
- HORIZONTAL MODE ..... A
- A TRIGGER SOURCE ..... VERT MODE
- B TRIGGER SOURCE ..... VERT MODE
- CALIBRATOR ..... 4 V

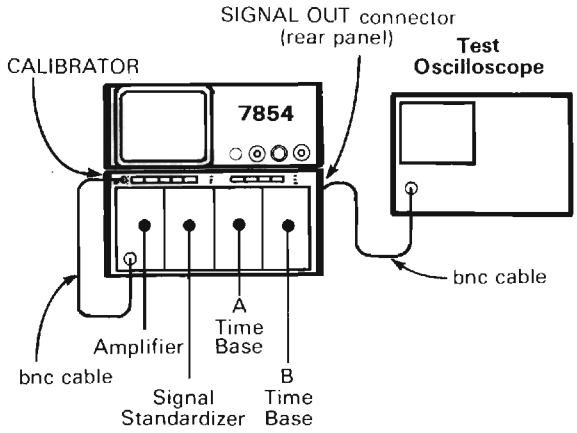

Test Equipment Controls:

Test Oscilloscope
- Deflection Factor ..... 2 V/div
- Sweep Rate ..... 0.2 ms/div

Amplifier
- Deflection Factor ..... 2 V/div
- Input Coupling ..... Dc

Signal Standardizer
- Test Selector Switch ..... Vert or Horiz + Step Resp
- Rep Rate ..... 10 kHz

A Time Base
- Sweep Rate ..... 0.2 ms/div
- Triggering ..... Auto,Ac,Internal
- Magnifier X1
- Mode ..... Independent

B Time Base
- Sweep Rate ..... 0.2 ms/div
- Triggering ..... Auto,Ac,Internal
- Magnifier X1
- Mode ..... Independent

2874-320

a. Set the A INTENSITY control for a visible display. Set the amplifier for a 2-division display in the lower half of the graticule area. Set the A time-base unit triggering controls for a stable display.

b. Set the VERTICAL MODE switch to RIGHT.

c. Set the Signal Standardizer Amplitude and Position controls for a 2-division display in the upper half of the graticule area.

d. Set the VERTICAL MODE switch to ALT.

e. **EXAMINE**—For 1-kHz and 10-kHz triggered waveforms on the 7854 crt (adjust the time-base unit trigger level controls as necessary).

f. **CHECK**—For 1-kHz and 10-kHz triggered waveforms on the test oscilloscope crt (adjust the time-base unit trigger level controls as necessary).

g. Set the A TRIGGER SOURCE switch to LEFT VERT.

h. **EXAMINE**—Sequentially select all positions of the VERTICAL MODE switch and check for a stable display of only the 1-kHz waveform on the 7854 crt.

i. **CHECK**—Sequentially select all positions of the VERTICAL MODE switch and check for a stable display of only the 1-kHz waveform on the test oscilloscope.

j. Set the A TRIGGER SOURCE switch to RIGHT VERT.

k. **EXAMINE**—Sequentially select all positions of the VERTICAL MODE switch and check for a stable display of only the 10-kHz waveform on the 7854 crt.

l. **CHECK**—Sequentially select all positions of the VERTICAL MODE switch and check for a stable display of only the 10-kHz waveform on the test oscilloscope.

m. Set the VERTICAL MODE switch to ALT, the HORIZONTAL MODE switch to B and the B INTENSITY control for a visible display.

n. **EXAMINE**—For 1-kHz and 10-kHz triggered waveforms on the 7854 oscilloscope.

o. Set the B TRIGGER SOURCE switch to LEFT VERT.

p. **EXAMINE**—Sequentially select alal positions of the VERTICAL MODE switch and check for a stable display of only the 1-kHz waveform on the 7854 oscillocope.

q. Set the B TRIGGER SOURCE switch to RIGHT VERT.

r. **EXAMINE**—Sequentially select all positions of the VERTICAL MODE switch and check for a stable display of only the 10-kHz waveform on the 7854 oscilloscope.

http://manoman.sqhill.com

s. Set the VERTICAL MODE switch to ALT, the HORIZONTAL MODE switch to ALT, and the A and B TRIGGER SOURCE switches to VERT MODE.

t. **EXAMINE**—Vary the 7854 time-base units Trigger Level controls; the B HORIZ time-base unit should be triggered on the 1-kHz waveform and the A HORIZ time-base unit should be triggered on the 10-kHz waveform.

http://manoman.sqhill.com

E. HORIZONTAL SYSTEM

Equipment Required: (Numbers correspond to those listed in Table 4-3, Test Equipment)

2. Amplifier unit (two required)
4 Time base
5. Signal Standardizer unit
9. Time-mark generator
10. Low-frequency sine-wave generator
12. Function Generator
14. Coaxial bnc cable (one 18-inch, two 42-inch required)
20. Low-capacitance screwdriver
22. Jumper wire
24. Battery (memory backup)

Shaded lines identify Performance Requirement CHECK.

E1. HORIZONTAL SYSTEM PRELIMINARY SETUP

a. Perform the Adjustment and Performance Check Power-Up Sequence.

b. Refer to Section 5, Instrument Options, and the Change Information at the rear of this manual for any modifications which may affect this procedure.

c. See the **TEST POINT AND ADJUSTMENT LOCATIONS E** foldout page in Section 7, Diagrams and Circuit Board Illustrations.

d. Set the 7854 controls as follows:

POWER switch ..... On (pushbutton in)
VERTICAL MODE ..... RIGHT
VERT TRACE SEPARATION (B) ..... Midrange
A TRIGGER SOURCE ..... VERT MODE
A INTENSITY ..... Midrange
HORIZONTAL MODE ..... A
B INTENSITY ..... Midrange
B TRIGGER SOURCE ..... VERT MODE
FOCUS ..... Midrange
READOUT intensity ..... OFF (in detent)
GRAT ILLUM ..... As desired
CRT DISPLAY ..... SCOPE

E2. CHECK/ADJUST HORIZONTAL AMPLIFIER GAIN AND READOUT JITTER (A17R160, A17R15, A17R30, A17R33)

NOTE

First perform step E1, then proceed.

E2. SETUP CONDITIONS

7854 Controls:
No change in settings.

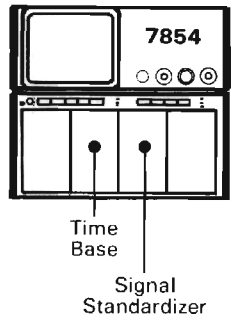

Test Equipment Controls:
Signal Standardizer
Test Selector Switch ..... Vert or Horiz Com Mode
Rep Rate ..... 1 MHz

Time Base
Sweep Rate ..... 0.1 ms/div
Triggering ..... Auto,Ac,Internal

2874-321A

http://manoman.sqhill.com

a. Set the A INTENSITY control for a well-defined trace.

b. Connect test point TP41 to test point TP141 with a jumper wire (located on Horizontal Amplifier Board A17).

c. **EXAMINE**—The vertical trace should be within 0.5 division of the center vertical graticule line.

d. **ADJUST**—The Limit Ctr adjustment R160 (located on Horizontal Amplifier Board A17) to align the displayed trace with the center vertical graticule line.

e. Remove jumper wire.

f. **EXAMINE**—The vertical trace should be within 0.5 division of the center graticule line.

g. **ADJUST**—The horizontal Ctr adjustment R15 (located on Horizontal Amplifier Board A17) to align the trace with the center graticule line.

h. Move the Signal Standardizer to the B HORIZ compartment.

i. Set the HORIZONTAL MODE switch to B.

j. Set the B INTENSITY control for a well-defined trace.

k. Set the Signal Standardizer Test selector switch to Vert or Horiz Gain. Align the bright vertical trace with the center vertical graticule line using the Signal Standardizer Position control.

l. **EXAMINE**—For 8 divisions of deflection between the center nine traces within 0.08 division. Note the exact deflection for comparison in part s.

m. **ADJUST**—The horizontal Gain adjustment R30 (located on Horizontal Amplifier Board A17) for exactly 8 divisions of deflection between the center nine traces measured at the second and tenth graticule lines.

n. **INTERACTION**—The adjustment of R30 affects High Frequency Timing step E3.

o. **EXAMINE**—That each vertical trace within the center eight divisions align with the respective graticule lines within 0.05 division. (The horizontal Gain adjustment R30 should be set for optimum gain for this check to be valid.)

p. **ADJUST**—If necessary, compromise the setting of the horizontal Gain adjustment to meet the requirements of parts (l) and (o).

q. Move the Signal Standardizer to the A HORIZ compartment.

r. Set the HORIZONTAL MODE switch to A.

s. **CHECK**—For 8 divisions of deflection between the center nine traces within 0.08 division of the deflection noted in part l (or m if performed).

t. **EXAMINE**—That each vertical trace aligns with the respective graticule lines within 0.05 division (the bright vertical trace must be at graticule center).

u. **INTERACTION**—Compromise the setting of R30 as necessary for optimum gain for both A and B HORIZ compartments. If re-adjustment is necessary recheck parts (a) through (s). This verifies that the difference between Horizontal channels is 1% or less.

u. Remove the Signal Standardizer and time-base unit.

v. Install time-base units in the A HORIZ and B HORIZ compartments.

w. Set the time-base Position controls to midrange and the sweep rate selector switches to 50μs/div. Press the X10 magnifier pushbuttons to obtain a sweep rate of 5μs/div.

x. Turn the READOUT intensity control to midrange to obtain a crt readout.

y. Set the HORIZONTAL MODE switch to ALT.

z. **EXAMINE**—The readout display for objectionable jitter.

aa. **ADJUST**—The Readout Stability adjustment, R33 (on the Horizontal Amplifier Board A17), for minimum readout jitter.

http://manoman.sqhill.com

E3. CHECK/ADJUST 1 MS LINEARITY AND HIGH-FREQUENCY TIMING (A17C55, A17C155, A17C32)

NOTE

If the preceding step was not performed, first perform step E1, then proceed.

E3. SETUP CONDITIONS

7854 Controls:
HORIZONTAL MODE ..... A

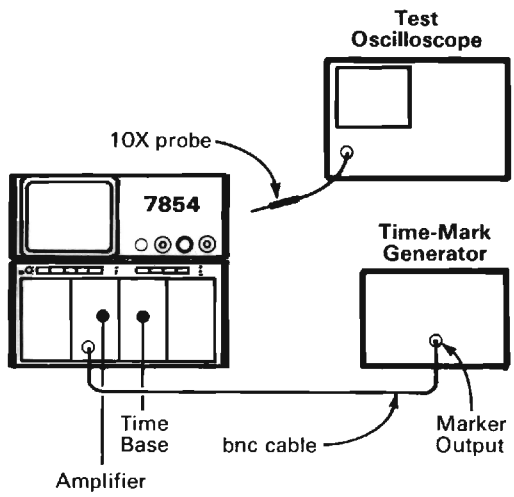

Test Equipment Controls:

Test Oscilloscope
- Vertical Deflection ..... 0.5 V/div
- Sweep Rate ..... 5 μs/div
- Input Coupling ..... DC
- Triggering ..... Auto,Ac,Internal

Time Base
- Sweep Rate ..... 1 ms/div
- Triggering ..... Auto,Ac,Internal
- Mode ..... Independent

Amplifier
- Deflection Factor ..... 0.5 V/div
- Input Coupling ..... DC

Time-Mark Generator ..... 1 ms markers

2874-322

a. Set the Amplifier unit deflection factor for about 2 divisions of time marker display. Set the A INTENSITY control for a visible display.

b. Set the time-base unit triggering controls for a stable display.

c. Position the first marker to the extreme left line on the graticule.

d. Set the time-base unit sweep calibration pre-set for 1 marker at each major graticule division between the second and tenth graticule lines (center 8 divisions).

e. **CHECK**—That each time-mark aligns with a vertical graticule line along the center horizontal graticule line within 0.05 division (1/4 of a minor division). This verifies 1 ms/div linearity.

f. **CHECK**—Refer to the high-frequency and linearity verification procedures for the time-base unit in use. These are found in the time-base units instruction manual in the Performance Check or Calibration sections. If these checks are met, omit the remainder of step E3 (parts (g) through (r)).

g. Set the time base unit for 2 ns/division sweep rate.

h. Apply 2-nanosecond time-markers and set the Amplifier unit vertical deflection for about 2 divisions of display.

i. **EXAMINE**—For 1 time-mark per division over the center 8 divisions of the display within 0.12 division.

j. **ADJUST**—2 ns timing adjustments C55 and C155 (located on Horizontal Amplifier Board A17) for one time-mark per division over the center 8 divisions of the display (position as necessary). Both of these adjustments should be set to approximately the same position.

k. Set the time base unit sweep rate for 1 ns/division. (If the 7B92A is not available, set the time base for 10 ns/division sweep rate with X10 sweep magnification.)

l. Apply 1-nanosecond time markers and set the Amplifier unit vertical deflection for about 2 divisions of display.

m. **EXAMINE**—For 1 time-mark per division over the center 8 divisions of the display within 0.16 division. (External triggering may be required.)

n. **ADJUST**—1 ns timing with the HF Adj capacitor C32 and (for SN B031170 & up) HF Adj resistor R32 (located on Horizontal Amplifier Board A17) for one timemark per division over the center 8 divisions of the display (position as necessary).

o. Set the time base unit for 500 ps/division sweep rate.

http://manoman.sqhill.com

p. **CHECK**—For 1 time-mark every 2 divisions over the center 8 divisions of the display within 0.2 division.

q. **ADJUST**—If necessary, compromise the setting of the HF Adj capacitor, C32 and (for SN B031170 & up) HF Adj resistor, R32 , for optimum 1-ns and 500-ps timing.

r. Remove the time base unit and install it in the B HORIZ compartment. Set the HORIZONTAL MODE switch to B and perform parts (f) through (q).

E4. CHECK X-Y PHASING

NOTE

If the preceding step was not performed, first perform step E1, then proceed.

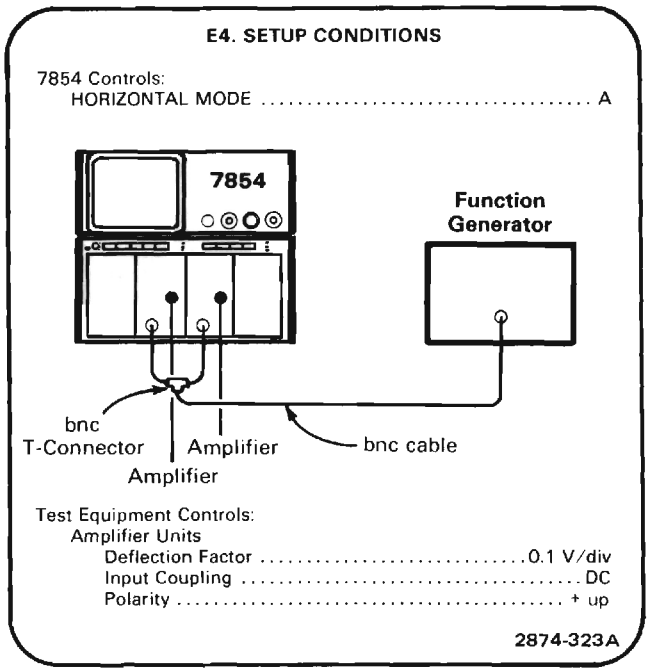

a. Set the function generator for eight divisions of vertical and horizontal deflection of a 35 kHz sinewave.

b. **CHECK**—Crt Lissajous display (see figure 4-2) for a separation of 0.28 division or less (indicates 2 degrees or less phase shift).

c. Remove the Amplifier unit from the RIGHT VERT compartment and install it in the LEFT VERT compartment.

d. Set the VERTICAL MODE switch to LEFT.

e. **CHECK**—Crt Lissajous display for a separation of 0.28 division or less (indicates 2 degrees or less of phase shift).

NOTE

If the instrument under calibration contains Option 02, omit the remainder of this step.

f. Remove the Amplifier Unit from the A HORIZ compartment and install it in the B HORIZ compartment.

g. Set the HORIZONTAL MODE switch to B.

h. **CHECK**—Crt Lissajous display for a separation of 0.28 division or less (indicates 2 degrees or less of phase shift).

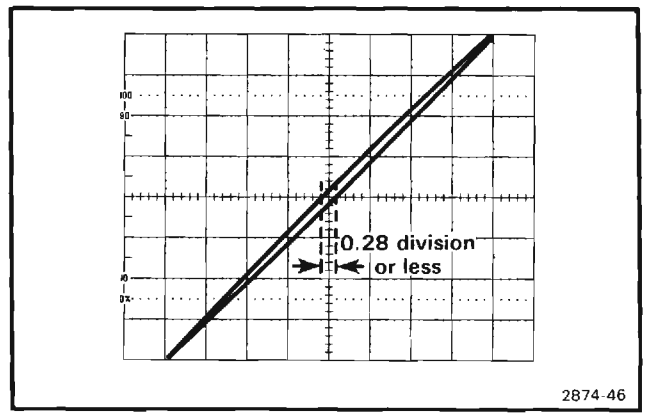

Figure 4-2. Typical display when checking X-Y phase relationships.

http://manoman.sqhill.com

E5. CHECK/ADJUST X-Y COMPENSATION (A33C832; OPTION 02 ONLY)

NOTE

If the preceding step was not performed, first perform step E1, then proceed.

If the instrument under calibration does not contain Option 02, omit this step.

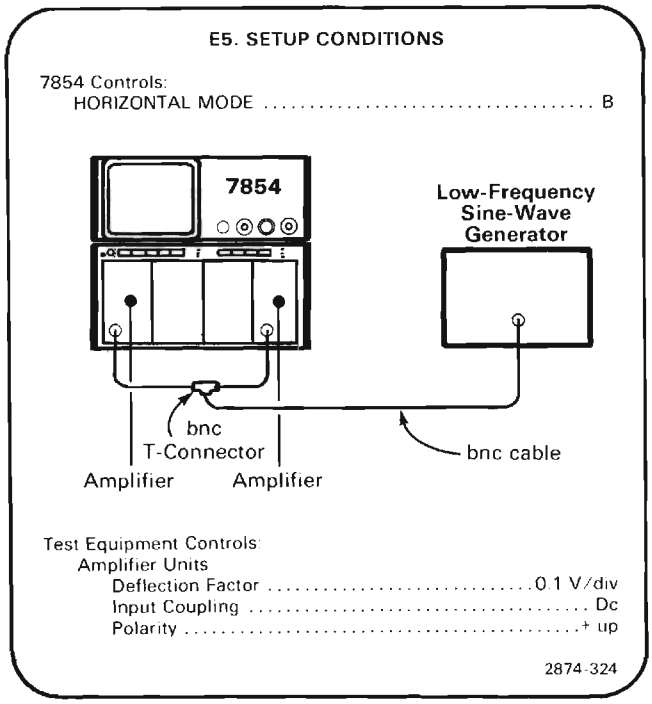

a. Set the low-frequency sine-wave generator for eight divisions of vertical and horizontal deflection at 1 megahertz.

b. **CHECK**—Crt Lissajous display (see Figure 4-2) for a separation of 0.28 division or less (indicates 2 degrees or less phase shift).

c. **ADJUST**—X-Y Comp adjustment C832 (located on X-Y Compensation Board A33) for minimum separation of the Crt Lissajous display. It will be necessary to remove the left side cover of the plug-in unit installed in the B HORIZ compartment to provide access to C832.

d. Remove the Amplifier unit from the LEFT VERT compartment and install it in the RIGHT VERT compartment.

e. Set the VERTICAL MODE switch to RIGHT.

f. **CHECK**—Crt Lissajous display for a separation of 0.28 division or less (indicates 2 degrees or less of phase shift).

g. **ADJUST**—If necessary, compromise the setting of the X-Y Comp adjustment, C832, for minimum separation of the crt Lissajous display for both LEFT VERT and RIGHT VERT compartments.

http://manoman.sqhill.com

F. VERTICAL SYSTEM

Equipment required: (Numbers correspond to those listed in Table 4-3, Test Equipment.)

2. Amplifier
4. Time base (two required)
5. Signal Standardizer
6. Plug-in Extender
7. Analog Test Card (067-0912-00)
10. Low-Frequency sine-wave generator
11. High-Frequency sine-wave generator
14. Coaxial cable (one 18-inch, one 42-inch required)
15. 50 ohm terminators (two required)
16. 2X Attenuator
17. Bnc-T connectcor
19. Nylon tuning tool
24. Battery (memory backup)

Shaded lines identify Performance Requirement CHECK.

F1. VERTICAL SYSTEM PRELIMINARY SETUP

a. Perform the Adjustment and Performance Check Power-Up Sequence.

b. Refer to Section 5, Instrument Options, and the Change Information at the rear of this manual for any modifications which may affect this procedure.

c. See the **TEST POINT AND ADJUSTMENT LOCATIONS F** foldout page in Section 7, Diagrams and Circuit Board Illustrations.

d. Set 7854 Oscilloscope controls as follows:

POWER switch ..... On (pushbutton in)
VERTICAL MODE ..... LEFT
VERT TRACE SEPARTION (B) ..... Midrange
A TRIGGER SOURCE ..... VERT MODE
A INTENSITY ..... Midrange
HORIZONTAL MODE ..... B
B INTENSITY ..... Midrange
B TRIGGER SOURCE ..... VERT MODE
FOCUS ..... Midrange
READOUT intensity ..... OFF (in detent)
GRAT ILLUM ..... As desired
CRT DISPLAY ..... SCOPE

CAUTION

To prevent damage to the Vertical system due to inadvertent shorts, it is recommended that a non-metallic tuning tool be used whenever possible.

F2. ADJUST VERTICAL CENTERING (A19R20, A19R120, A18R105)

NOTE

First perform step F1, then proceed.

F2. SETUP CONDITIONS

7854 Controls:
VERTICAL MODE ..... CHOP

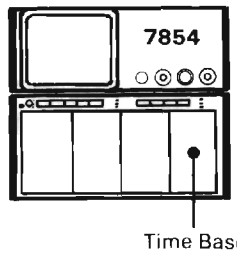

Test Equipment Controls:
Time Base
Sweep Rate ..... 0.1 ms/div
Triggering ..... Auto,Ac,External

2874-325

http://manoman.sqhill.com

a. **EXAMINE**—That displayed traces overlap.

b. **ADJUST**—Left Balance adjustment R120 (located on Vertical Channel Switch Board A19) to overlap the displayed traces.

c. Set the VERTICAL MODE switch to ADD and note the direction and magnitude of trace movement.

d. Set the VERTICAL MODE to CHOP.

e. **ADJUST**—Right Balance adjustment R20 (located on Vertical Channel Switch Board A19) to position one trace one-half the distance and in the opposite direction to trace movement noted in part (c).

f. **ADJUST**—Left Balance adjustment, R120, to overlap the traces.

g. Repeat parts (c) through (f) as required to obtain minimum trace shift.

h. Install a Signal Standardizer in the RIGHT VERT compartment.

i. Set the Signal Standardizer to Test Com Mode.

j. Set the VERTICAL MODE switch to RIGHT.

k. **EXAMINE**—That displayed trace is within 0.5 division of graticule center and note displacement.

l. **ADJUST**—Vert Ctr adjustment R105 (located on Vertical Amplifier Board A18) to position trace to graticule center.

m. Remove the Signal Standardizer from the RIGHT VERT plug-in compartment and install it in the LEFT VERT compartment.

n. Set the VERTICAL MODE switch to LEFT.

o. **EXAMINE**—That displayed trace is within 0.5 division of trace displacement noted in part (k) and no more than 0.5 division from graticule center.

p. **ADJUST**—Compromise the Vert Ctr adjustment R105 so that the displayed trace is at graticule center within 0.5 division for both the LEFT VERT and RIGHT VERT compartments and no more than 0.5 div from each other (parts (h) through (p)).

F3. ADJUST VERTICAL AMPLIFIER THERMAL COMPENSATIONS (A18R139, A18R169)

NOTE

If the preceding step was not performed, first perform step F1, then proceed.

Before this step may be performed, all digital boards must be removed (A25 through A31; see location of Circuit Boards illustration at the beginning of the Diagrams and Circuit Board Illustration Section) and the 067-0912-00 Analog Test board must be installed as per the appropriate instructions given in the Maintenance section of this manual. The top of the instrument must also be raised per the instructions in the Maintenance section of the Display Unit Kickstand.

F3. SETUP CONDITIONS

7854 Controls:
POWER ..... OFF

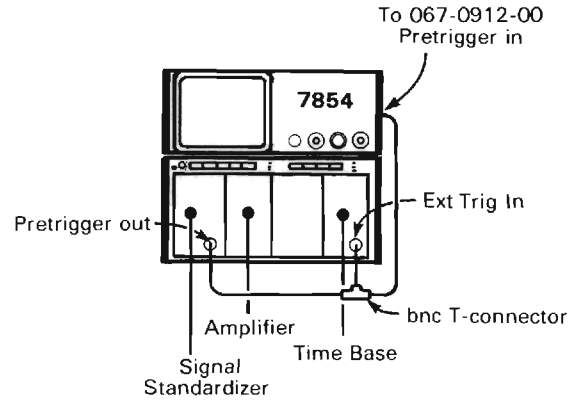

Test Equipment Controls:
Time Base
Sweep Rate ..... 0.2 ms/div
Triggering ..... Auto,Ac,Internal

Amplifier
Postion ..... Midrange

Signal Standardizer
Test Selector Switch ..... Aux in
Rep Rate ..... 100 Hz

2874-326

a. With the display unit raised and supported by the kickstand, unplug the peltola connector from J91 located on the bottom of the Mother Board A8.

http://manoman.sqhill.com

NOTE

There are two brown on white (91) peltola cables plugged into the bottom of the Mother Board. If these are reversed, the instrument still operates properly. However, for this step, the cable going to the rear of the instrument (the one not in the wiring harness) must be disconnected.

b. Connect the XY INH signal from the 067-0912-00 to J91 on the Mother Board using a peltola cable.

c. Press the POWER switch to on.

d. Set the VERTICAL MODE switch to RIGHT and the HORIZONTAL MODE switch to B.

e. Using the Amplifier unit Position control, vertically position one trace to 1 division below the top of the graticule.

f. Using the Signal Standardizer Position control, vertically position the other trace to 1 division above the bottom of the graticule.

g. Set the time-base unit sweep rate to 2 ms/div.

h. Set the time-base triggering to Auto, Ac, External.

i. Use the time-base Triggering controls to obtain a stable display triggered on the negative edge.

j. **EXAMINE**—Abberations for 0.06 divisions or less rolloff and overshoot.

k. **ADJUST**—Thermal Compensation R139, Comp 1 (located on Vertical Amplifier Board A18) for minimum rolloff and overshoot.

l. Set the Signal Standardizer rep rate to 1 kHz.

m. Set the time-base unit sweep rate to .2 ms/div.

n. **EXAMINE**—Abberations for 0.06 division or less rolloff and overshoot.

o. **ADJUST**—Thermal compensation R169, Comp 2 (located on Vertical Amplifier Board A18) for a minimum rolloff and overshoot.

p. Turn the POWER switch to OFF.

q. Unplug the XY INH peltola cable from J91 on the bottom of the Mother Board and re-install the brown on white peltola connector to its original position.

r. Lower and secure the display unit by reversing the Display Unit Kickstand procedure found in the Maintenance section of this manual.

s. Remove the 067-0912-00 Analog Test board and re-install the digital boards by reversing the Analog Test board procedures given in the Maintenance section of this manual.

F4. ADJUST VERTICAL CHANNEL SWITCH COMPENSATIONS (A19R25, A19R33, A19R37, A19R42, A19R45, A19C50, A19R125, A19R133, A19R142, A19R145, A19C150)

NOTE

If the preceding step was not performed, first perform step F1, then proceed.

F4. SETUP CONDITIONS

7854 Controls:
No change in settings.

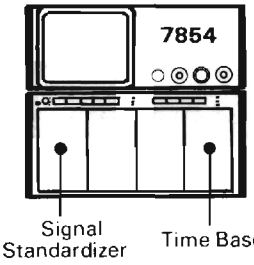

Test Equipment Controls:
Time Base
Sweep Rate ..... 2 ms/div
Triggering ..... Auto,Ac,Internal

Signal Standardizer
Test Selector Swith ..... Vert or Horiz + Step Resp
Rep Rate ..... 100 Hz

2874-327

a. Set the Signal Standardizer Amplitude control for a 6 division, square-wave display.

b. **EXAMINE**—The square-wave display for less than 0.06 division of abberations at the time-base sweep rates and Signal Standardizer Rep Rates given in Table 4-5.

c. **ADJUST**—Thermal Compensation adjustments as given in Table 4-5 for minimum overshoot and rolloff.

d. **INTERACTION**—The adjustments listed in Table 4-5 may interact with each other: repeat as necessary.

http://manoman.sqhill.com

TABLE 4-5

Vertical Channel Switch Compensation Adjustments for LEFT Channel (Located on Vertical Channel Switch Board A19)

Adjustment	Signal Standardizer Rep Rate	Sweep Rate
R125	100 Hz	5 ms/div
R133	1 KHz	.5 ms/div
R137	10 KHz	50 μs/div
R142	10 KHz	10 μs/div
R145,C150	100 KHz	5 μs/div

e. Remove Signal Standardizer from the LEFT VERT compartment and install it in the RIGHT VERT compartment.

f. Set the VERTICAL MODE switch to RIGHT.

g. **EXAMINE**—The square-wave display for less than 0.06 division of abberations at the time-base sweep rates and Signal Standardizer Rep Rates given in Table 4-6.

h. **ADJUST**—Thermal Compensation adjustments as given in Table 4-6 for minimum overshoot and rolloff.

i. **INTERACTION**—The adjustments listed in Table 4-6 may interact with each other: repeat as necessary.

TABLE 4-6

Vertical Channel Switch Compensation Adjustments for RIGHT Channel (Located on Vertical Channel Switch Board A19)

Adjustment	Signal Standardizer Rep Rate	Sweep Rate
R25	100 Hz	5 ms/div
R33	1 KHz	.5 ms/div
R37	10 KHz	50 μs/div
R42	10 KHz	10 μs/div
R45,C50	100 KHz	5 μs/div

j. **INTERACTION**—Adjustments in this step (F4) interact with the adjustments in step H7, H8 and H9.

F5. CHECK/ADJUST VERTICAL GAIN (A18R160)

NOTE

If the preceding step was not performed, first perform step F1, then proceed.

F5. SETUP CONDITIONS

7854 Controls:
VERTICAL MODE ..... RIGHT

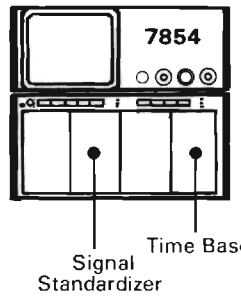

Test Equipment Controls:
Time Base
Sweep Rate ..... 2 μs/div
Triggering ..... Auto,Ac,External

Signal Standardizer
Test Selector Switch ..... Vert or Horiz Gain
Rep Rate ..... 10 kHz

2874-328A

a. Position the Signal Standardizer display to align the bright trace with the graticule center line.

b. **EXAMINE**—For one trace per graticule division within 0.06 division over the center 6 graticule divisions. Note the exact magnitude for comparison in part f.

c. **ADJUST**—The vertical Gain R160 (located on Vertical Amplifier Board A18) for one division between each of the center 7 displayed traces.

d. Remove the Signal Standardizer from the RIGHT VERT compartment and install it in the LEFT VERT compartment.

e. Set the VERTICAL MODE switch to LEFT.

f. **CHECK**—For one trace per graticule division within 0.06 division of the magnitude noted in part (b) (or (c) if performed), over the center 6 graticule divisions (verifies gain difference between vertical channels to be 1% or less).

g. **ADJUST**—If necessary, compromise the setting of the vertical Gain adjustment, R160, for optimum gain for both the LEFT and RIGHT VERT compartments.

http://manoman.sqhill.com

F6. CHECK VERTICAL LOW-FREQUENCY LINEARITY

NOTE

If the preceding step was not performed, first perform step F1, then proceed.

F6. SETUP CONTROLS

7854 Controls:
No change in settings.

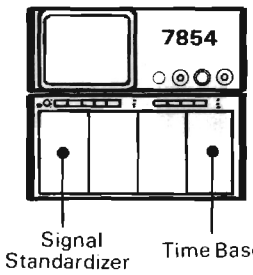

Test Equipment Controls:
Time Base
Sweep Rate ..... 1 ms/div
Triggering ..... Auto,Ac,Internal

Signal Standardizer
Test Selector Switch ..... Vert or Horiz + Step Resp
Rep Rate ..... 1 KHz

2874-329

a. Set the Signal Standardizer Amplitude and Position controls to display a signal exactly 2 divisions in amplitude in the center of the graticule area.

b. **CHECK**—Position the two-division display vertically and check for not more than 0.1 division of compression or expansion anywhere within the graticule area (verifies low-frequency linearity specification).

c. **ADJUST**—If the specification of part (b) was not met, perform steps F2, F3, F4 and F5.

F7. ADJUST HIGH-FREQUENCY COMPENSATION (A18R142, A18R172, A18R18, A18C18, A18L20)

NOTE

If the preceding step was not performed, first perform step F1, then proceed.

F7. SETUP CONDITIONS

7854 Controls:
No change in settings.

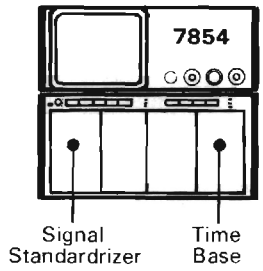

Test Equipment Controls:
Time Base
Sweep Rate ..... 0.1 μs/div
Triggering ..... Auto,Ac,Internal

Standardizer
Test Selector Switch ..... Vert or Horiz + Step
Rep Rate ..... 1 MHz

2874-330

a. Set the Signal Standardizer Amplitude and Position controls for a 6-division, square-wave display, centered on the graticule.

b. Set the time-base unit Triggering and Position controls for a stable display. Using the Triggering Slope switch, trigger the display on the rising edge of the square wave.

c. **EXAMINE**—Displayed pulse for optimum flat top after the first 50 ns, within 0.06 division.

d. **ADJUST**—HF compensations R142 (Comp 3) and R172 (Comp 4) (located on Vertical Amplifier Board A18) for optimum leveling of the waveform.

e. Set the time-base sweep rate to 50 ns/division and the sweep magnifier to X10.

f. Using the time base Position control, position the display for viewing the leading edge of the square wave. If necessary, advance the B INTENSITY control for a well defined display.

g. **EXAMINE**—Displayed pulse for optimum square corner and flat top within 0.3 division peak-to-peak for the first 20 ns after transition.

http://manoman.sqhill.com

h. **ADJUST**—HF Compensations R18 (Comp 6), C18 (Comp 7) and L20 (Comp 5) (on the Vertical Amplifier Board A18) for minimum abberations and best square wave response.

i. Set the Signal Standardizer Test selector switch to Vert or Horiz -Step Resp.

j. Position the leading edge of the signal 1 division above the bottom of the graticule with the Signal Standardizer Position control.

k. **EXAMINE**—Displayed pulse for optimum square corner and flat bottom within 0.3 division peak-to-peak for the first 20 ns after transition.

l. **ADJUST**—If necessary, compromise the high-frequency compensation adjustments R18, C18 and L20 for optimum pulse response to both positive and negative steps (parts (g) through (l)).

m. Move the Signal Standardizer to the RIGHT VERT compartment and set the VERTICAL MODE switch to RIGHT.

n. **EXAMINE**—Displayed pulse for optimum square corner and flat response to both positive and negative steps within 0.3 division as in parts (g) and (k).

o. **ADJUST**—If necessary, compromise the high-frequency adjustments R18, C18 and L20 for optimum pulse response for both vertical compartments (parts (g) through (o)).

p. **INTERACTION**—If adjustments were made, steps H7 and H9 of the Digitzer procedure must be performed.

F8. EXAMINE VERTICAL AMPLIFIER BANDWIDTH

NOTE

If the preceding step was not performed, first perform step F1, then proceed.

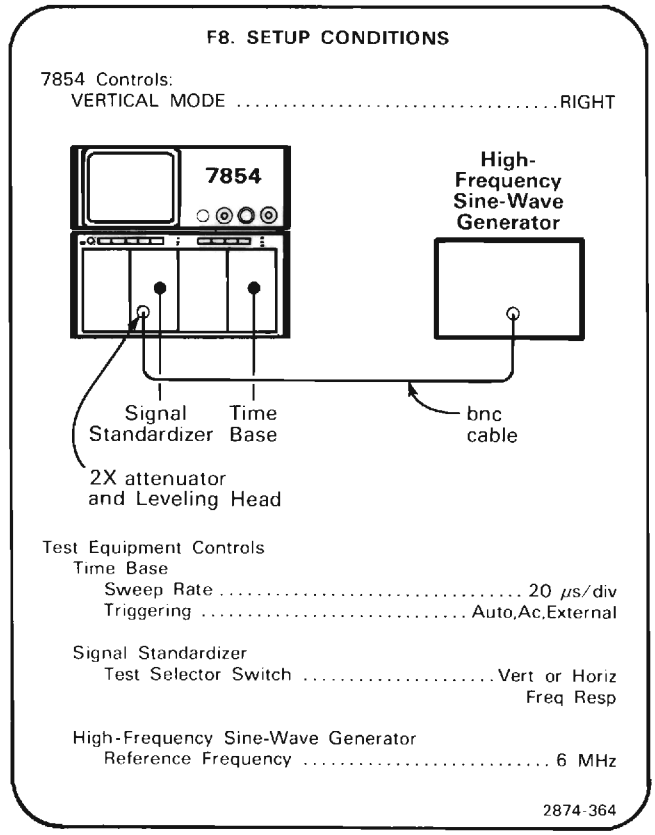

a. With the High-Frequency Sine-Wave Generator connected to the Signal Standardizer Aux In-CW In (Freq Resp) input via a 2X attenuator, set the Signal Standardizer Amplitude control fully clockwise.

b. Set the High-Frequency Sine-Wave Generator for a 10-division display at the reference frequency (less than 10 MHz). (To obtain a 10-division display, first set for 8 divisions, then vertically position the display 1 division down using the Signal Standardizer Position control; then set the sine-wave generator to return the top of the display to the top of the graticule.)

c. Set the Signal Standardizer Amplitude and Position controls for a 6-division display centered on the graticule. (The CW Leveled indicator should be lit.)

d. Without changing the output amplitude, increase the generator frequency to 475 MHz.

e. **EXAMINE**—Crt display to be greater then or equal to 4.24 vertical divisions.

http://manoman.sqhill.com

f. Move the Signal Standardizer to the LEFT VERT compartment (leave signal connected) and set the VERTICAL MODE switch to LEFT.

g. **EXAMINE**—Repeat parts (a) through (e) for the LEFT VERT compartment.

h. **ADJUST**—If the guidelines of step (e) or (g) were not met, perform steps F2, F3, F4, F5, F6 and F7.

F9. CHECK VERTICAL CHANNEL ISOLATION

NOTE

If the preceding step was not performed, first perform step F1, then proceed.

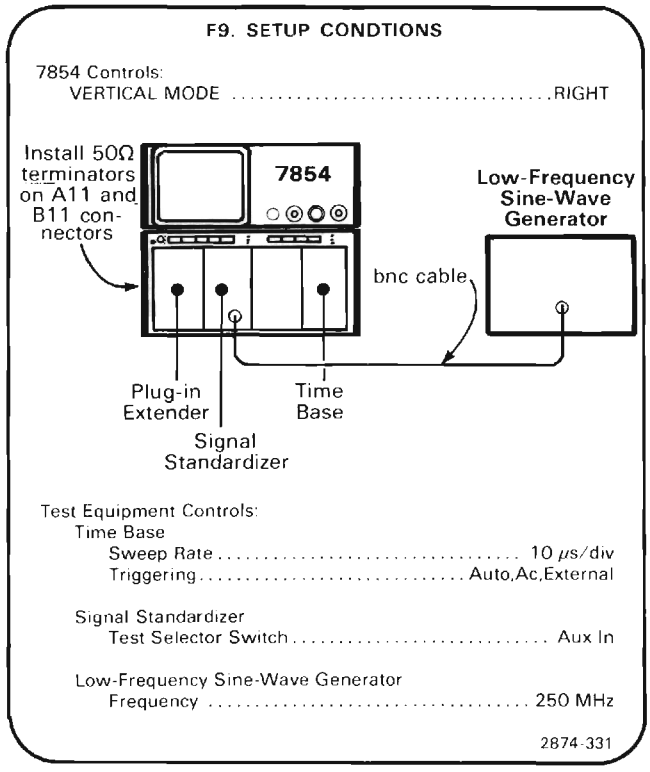

a. Set the ouput of the low-frequency sine-wave generator and the Signal Standardizer Amplitude control for 8 divisions of deflection at 250 MHz.

b. Set the VERTICAL MODE switch to LEFT.

c. **CHECK**—The displayed signal for an amplitude of 0.08 division or less while adjusting the low-frequency sine-wave generator from 250 MHz to 50 MHz (verifies 250 MHz isolation of at least 100:1).

d. Move the Signal Standardizer to the LEFT VERT compartment and the Plug-in Extender (with 50 ohm terminators on A11 and B11 connectors) to the RIGHT VERT compartment.

e. Set the output of the low-frequency sine-wave generator and the Signal Standardizer amplitude control for 8 divisions of display at 250 MHz.

f. Set the VERTICAL MODE switch to RIGHT.

g. **CHECK**—Displayed signal for an amplitude of 0.08 division or less while adjusting the low-frequency sine-wave generator from 250 MHz to 50 MHz (verifies 250 MHz isolation of at least 100:1).

h. Disconnect the low-frequency sine-wave generator from the Signal Standardizer and connect the high-frequency sine-wave generator to the Signal Standardizer Aux In input.

i. Set the VERTICAL MODE switch to LEFT.

j. Set the output of the high-frequency sine-wave generator and the Signal Standardizer Amplitude control for 8 divisions of display at 475 MHz.

k. Set the VERTICAL MODE switch to RIGHT.

l. **CHECK**—Displayed signal for an amplitude of 0.2 division or less while adjusting the high-frequency sine-wave generator from 475 MHz to 250 MHz (verifies 475 MHz isolation of at least 40:1).

m. Move the Signal Standardizer to the RIGHT VERT compartment and the Plug-in Extender to the LEFT VERT compartment.

n. Set the output of the high-frequency sine-wave generator and Signal Standardizer Amplitude control for 8 divisions of display at 475 MHz.

o. Set the VERTICAL MODE switch to LEFT.

p. **CHECK**—Displayed signal for an amplitude of 0.2 division or less while adjusting the high-frequency sine-wave generator from 475 MHz to 250 MHz (verifies 475 MHz isolation of at least 40:1).

http://manoman.sqhill.com

F10. EXAMINE VERTICAL DISPLAY MODES

NOTE

If the preceding step was not performed, first perform step F1, then proceed.

F10. SETUP CONDITIONS

7854 Controls:
VERTICAL MODE ..... RIGHT

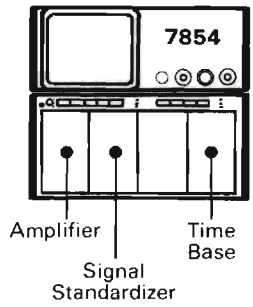

Test Equipment Controls:
Time Base
Sweep Rate ..... 20 ms/div
Triggering ..... Auto,Ac,Internal

Amplifier
Deflection Factor ..... 0.1 V/div
Input Coupling ..... Dc

Signal Standardizer
Test Selector Switch ..... Vert or Horiz Aux In

2874-332A

a. Postion the trace to the upper half of the graticule area with the Signal Standardizer Position control.

b. Set the VERTICAL MODE switch to LEFT and position the trace to the lower half of the graticule area with the left vertical-unit Position control.

c. **EXAMINE**—Crt display for two traces in the ALT and CHOP positions of the VERTCAL MODE switch.

d. Set the VERTICAL MODE switch to ADD.

e. **EXAMINE**—Crt display for a single trace that can be positioned vertically with either left of right vertical-unit Position controls.

F11. EXAMINE VERTICAL TRACE SEPARATION

NOTE

If the preceding step was not performed, first perform step F1, then proceed.

F11. SETUP CONDITIONS

7854 Controls:
HORIZONTAL MODE ..... CHOP
VERTICAL MODE ..... ADD

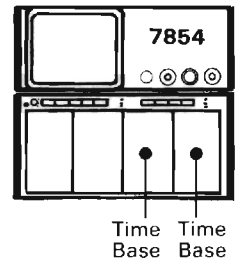

Test Equipment Controls:
A and B Time Base Units
Sweep Rate ..... 1 ms/div
Triggering ..... Auto,Ac,Internal

2874-333

a. **EXAMINE**—Rotate the VERT TRACE SEPARATION (B) control throughout its range and check that the trace produced by the B time-base unit can be positioned above and below the trace produced by the A time-base unit by at least 4 divisions. Repeat with the HORIZONTAL MODE switch set to ALT.

http://manoman.sqhill.com

GA. DISPLAY SYSTEM

NOTE

Three procedures for the Display System are available; only one need be performed. Choose the procedure that corresponds to the test equipment and options available with the instrument under test.

1. GA—Recommended procedure; requires the 067-0961-00 Diagnostic Memory Board.

2. GB—To be used only if the 067-0961-00 Diagnostic Memory Board is not available. A Waveform Calculator Keyboard is required.

3. GC—To be used with Option 0D when a 067-0961-00 Diagnostic Memory Board is not available.

Equipment Required: (Numbers correspond to those listed in Table 4-3, Test Equipment).

3. Amplifier Unit

20. Low capacitance screwdriver

Also required is the 067-0961-00 Diagnostic Memory Board and the associated keyboard overlay.

Shaded lines identify Performance Requirement CHECK.

GA1. DISPLAY SYSTEM PRELIMINARY SETUP

a. With the POWER switch OFF, remove the ROM board from the instrument and replace it with the 067-0961-00 Diagnostic Memory Board per the appropriate instructions in the Maintenance section of this manual. Install the keyboard overlay on the Front-Panel Keyboard for the pushbutton nomenclature used in this procedure.

b. Perform the Adjustment and Performance Check Power-Up Sequence.

c. Refer to Section 5, Instrument Options, and the Change Information at the rear of this manual for any modifications that may affect this procedure.

d. See the **TEST POINT AND ADJUSTMENT LOCATIONS G** foldout page in Section 7, Diagrams and Circuit Board Illustrations.

e. Set the 7854 Oscilloscope controls as follows:

POWER switch ..... On (pushbutton in)
VERTICAL MODE ..... LEFT
VERT TRACE SEPARATION (B) ..... Midrange
A TRIGGER SOURCE ..... VERT MODE
A INTENSITY ..... Fully counterclockwise
HORIZONTAL MODE ..... B
B INTENSITY ..... Fully counterclockwise
B TRIGGER SOURCE ..... VERT MODE
READOUT intensity ..... OFF (in detent)
GRAT ILLUM ..... Midrange

GA2. WAVEFORM/READOUT CENTERING AND GAIN ADJUSTMENT (A29R1205, A29R1300, A18R65, A18R81)

NOTE

First perform step GA1, then proceed.

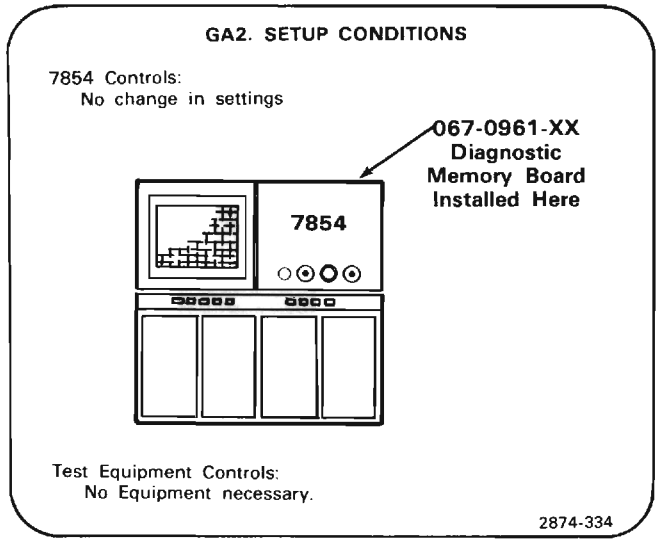

a. Sequentially press the front-panel keyboard GRAT and DOT pushbuttons to obtain a dot test pattern.

b. Set the front-panel STORED INT control for a usable display.

http://manoman.sqhill.com

c. Set the front-panel FOCUS control for optimum overall focus of the display.

d. **EXAMINE**—The bright center dot should be within 0.05 division of the center crt graticule line.

e. **ADJUST**—The Horizontal Offset adjustment R1205 (on Display Board A29), to horziontally align the bright center dot with the center crt graticule line.

f. **EXAMINE**—The display for horizontal alignment of each displayed dot with the corresponding graticule line within 0.05 division over the center 8 horizontal divisions.

g. **ADJUST**—The Horizontal Gain adjustment R1300 (on the Display Board A29), to align the displayed dots with the corresponding graticule line.

h. **EXAMINE**—The bright center dot should be within 0.05 division of the center crt graticule line.

i. **ADJUST**—The RO-WFM Ctr adjustment R65 (located on A18, Vertical Amplifier board), to align the bright center dot with the center crt graticule line.

j. **EXAMINE**—The display for vertical alignment of each displayed dot with the corresponding graticule line within 0.05 division over the center 6 vertical divisions.

k. **ADJUST**—The RO-WFM Gain adjustment R81 (located on A18, Vertical Amplifier board) to align the displayed dots with the corresponding graticule lines.

NOTE

If further adjustment of the Display system is required, omit the remainder of this step.

l. Turn the POWER switch OFF.

m. Remove the 067-0961-00 Diagnostic Memory Board per instructions in the Maintenance section of this manual.

n. Reinstall the ROM board in its original position.

GA3. VECTOR OFFSET AND GAIN ADJUSTMENT (A29R1620, A29R1621, A29R1625, A29R1720)

NOTE

If the preceding step was not performed, first perform Step GA1, then proceed.

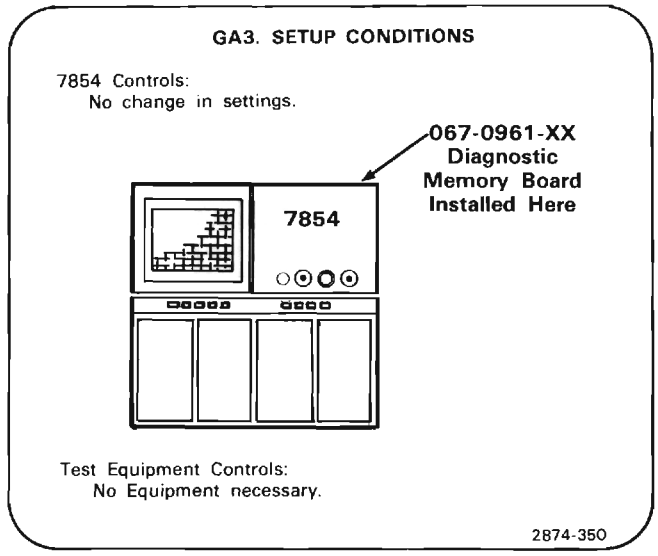

a. Press the front-panel keyboard VECT pushbutton to obtain a vector crosshatch display on the crt.

b. Set the front-panel STORED INT control for a usable display.

c. **EXAMINE**—The display for vertical alignment of the center horizontal vector segments with the center crt graticule line within 0.05 division.

d. **ADJUST**—The Vertical Vectors Offset adjustment, R1625 (on the back of the A29 Display Board), to vertically align the center horizontal vector segments with the graticule center line.

e. **EXAMINE**—The display for vertical alignment of the horizontal vector segments with the 7 center horizontal graticule lines, within 0.05 division.

f. **ADJUST**—The Vertical Vectors Gain adjustment, R1720 (on the back of the A29 Display Board) to vertically align the horizontal vector segments with 7 center horizontal graticule lines.

g. **EXAMINE**—The display for horizontal alignment of the center vertical vector segments with the center crt graticule line, within 0.05 division.

h. **ADJUST**—The Horizontal Vectors Offset adjustment, R1620 (on the back of the A29 Display Board), to horizontally align the center vertical vector segments with the graticule center line.

http://manoman.sqhill.com

i. **EXAMINE**—The display for horizontal alignment of the vertical vector segments with the 9 center vertical graticule lines, within 0.05 division.

j. **ADJUST**—The Horizontal Vectors Gain adjustment, R1621 (on the back of the A29 Display Board), to horizontally align the vertical vector segments with the 9 center vertical graticule lines.

k. Press the front-panel keyboard XY pushbutton to obtain a display alternating between a graticule dot pattern and a vector crosshatch pattern.

l. **EXAMINE**—The display for overlaying of the dot and vector patterns, within 0.05 division.

m. **ADJUST**—If necessary, compromise the settings of the Vertical Vectors Offset adjustment, R1625, and the Horizontal Vectors Offset adjustment, R1620, to overlay the dot and vector patterns.

NOTE

If further adjustment of the Display system is required omit the remainder of this step.

n. Turn the POWER switch to OFF.

o. Remove the 067-0961-00 Diagnostic Memory Board per instructions in the Maintenance section of this manual.

p. Reinstall the ROM board in its original position.

GA4. WAVEFORM VECTOR TIMING ADJUSTMENT (A29R1700)

NOTE

If the preceding step was not performed, first perform Step GA1, then proceed.

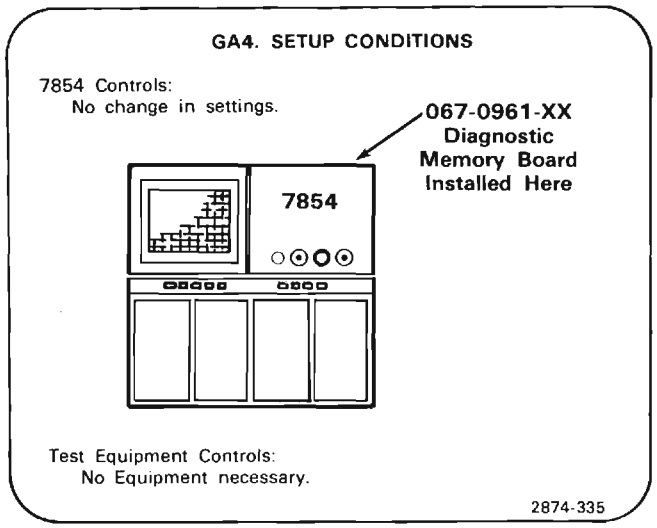

a. Press the front panel keyboard VECT push button to obtain a vector display on the crt.

b. Set the front-panel STORED INT control for a usable display.

c. **EXAMINE**—The display to ascertain that there are no bright spots or gaps in the trace.

d. **ADJUST**—The WFM vector timing adjustment, R1700 (on the A29 Display Board) for no bright spots or gaps in the display.

e. Press the front panel keyboard GRAT pushbutton to obtain a crosshatch pattern on the crt.

f. **EXAMINE**—The display for gaps less than or equal to 0.05 division at graticule intersections.

g. **ADJUST**—If necessary, compromise the setting of the WFM vector timing adjustment, R1700, for optimum vector display of both the vector timing and vector crosshatch test patterns.

NOTE

If further adjustment of the Display system is required, omit the remainder of this step.

h. Turn the POWER switch OFF.

i. Remove the 067-0961-00 Diagnostic Memory Board per instructions in the Maintenance section of this manual.

j. Reinstall the ROM board in its original position.

http://manoman.sqhill.com

GA5. CHARACTER DISPLAY ADJUSTMENT (A29R1200, A29R1100, A29R1106, A29R2200, A29R2600)

NOTE

If the preceding step was not performed, first perform Step GA1, then proceed.

GA5. SETUP CONDITIONS

7854 Controls:
No change in settings.

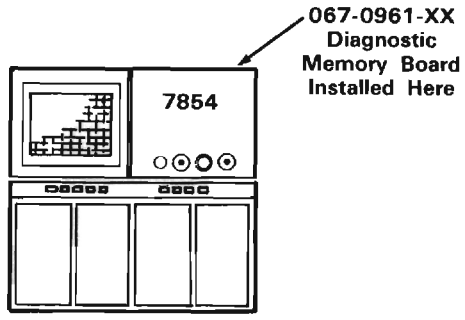

Test Equipment Controls:
Amplifier
Display Mode ..... Dual trace

2874-336

a. Press the front panel keyboard CHAR pushbutton to obtain a display of alphanumeric characters.

b. Set the front-panel READOUT intensity control for a usable display.

c. **EXAMINE**—The display for equal horizontal margins between the first and last characters displayed in a line and the corresponding graticule lines, within 0.1 division.

d. **ADJUST**—Character Horizontal Gain adjustment, R1200 (located on the A29 Display Board) to horizontally center the display.

e. **EXAMINE**—The display for vertical centering of the gap between the 8th and 9th character line, within 0.1 division.

f. **ADJUST**—The Character Vertical offset adjustment, R1106 (located on the A29 Display Board), to vertically center the character display.

g. **EXAMINE**—The display for the top margin between the top graticule line and the top of the first row of characters equal to the left and right margins, within 0.1 division.

h. **ADJUST**—The Character Vertical Gain adjustment, R1100 (located on the A29 Display Board), to equalize the top and side margins.

i. Press the front-panel keyboard SCOPE pushbutton to obtain a display of the amplifier deflection factors.

j. Press and hold one of the amplifier units trace-identify buttons.

k. **EXAMINE**—The readout display for correct indication of "IDENTIFY". If the readout display is incorrect, adjustment is required.

l. **ADJUST**—Column adjustment R2600, and Row adjustment, R2200 (located on the A29 Display Board) for correct display of "IDENTIFY". Set these adjustments to the center of the adjustment range. This provides correct readout indication. Release the amplifier unit trace-identify button.

m. Turn the POWER switch OFF.

n. Remove the 067-0961-00 Diagnostic Memory Board per the instructions in the Maintenance section of this manual.

o. Reinstall the ROM board in its original position.

http://manoman.sqhill.com

GB. DISPLAY SYSTEM

NOTE

Alternate procedure to be used only if the 067-0961-00 Diagnostic Memory Board is not available. A Waveform Calculator Keyboard is required.

Equipment Required: (numbers correspond to those listed in table 4-3, Test Equipment).

20. Low-Capacitance Screwdriver

Shaded lines identify Performance Requirement CHECK.

GB1. DISPLAY SYSTEM PRELIMINARY SETUP

a. Perform the Adjustment and Performance Check Power-Up sequence. MEMORY BACKUP POWER must be disconnected before performing Step GA4.

b. Refer to Section 5, Instrument Options, and the Change Information at the rear of this manual for any modifications which may affect this procedure.

c. See the **TEST POINT AND ADJUSTMENT LOCATIONS G** foldout page in Section 7, Diagrams and Circuit Board Illustrations.

d. Connect the remote WAVEFORM CALCULATOR keyboard to its rear-panel connector and set the 7854 controls as follows:

POWER switch ..... On (pushbutton in)
VERTICAL MODE ..... LEFT
VERT TRACE SEPARATION (B) ..... Midrange
A TRIGGER SOURCE ..... VERT MODE
A INTENSITY ..... Fully counterclockwise
HORIZONTAL MODE ..... B
B INTENSITY ..... Fully counterclockwise
B TRIGGER SOURCE ..... VERT MODE
READOUT intensity ..... Midrange
GRAT ILLUM ..... Midrange

e. Enter the following program into the 7854 memory using the remote WAVEFORM CALCULATOR keyboard.

NOTE

This program produces a waveform with known horizontal and vertical parameters for calibration of the Display System. This waveform is used as a numerical absolute and the adjustments made in this procedure match this absolute to the crt display.

To enter the program into the 7854 memory, press the PROGRAM ENTRY key on the WAVEFORM CALCULATOR keyboard to initiate program entry. A > (line pointer) should appear at the left of the 7854 crt display.

Sequentially press the following keys. Keystrokes that will not appear in the program shown on the 7854 crt are enclosed in parentheses ( ). Line numbers are automatically added.

1, 0, 2, 4, *(f)*,>P/W, TIME, *(f)*, DOTS, OFF, 0, WFM, 0, *, (NEXT),

P/W, 1, 0, /, *(f)*, >HSCL, P/W, 6, /, 0, *(f)*, >CNS, *(f)*, CLS, 1, (NEXT),

(f),>CNS, 3, CHS, ENTER, 3, ENTER, 1, 0, *f*, LBL, GSB, (NEXT),

http://manoman.sqhill.com

3, ENTER, 3, CHS, ENTER, 1, 0, *(f)*, LBL, GSB, (NEXT),

3, CHS, ENTER, 3, ENTER, 1, 0, *(f)*, LBL, GSB, (NEXT),

3, ENTER ENTER, 1, 0, *(f)*, LBL, GSB, 0, ENTER, (NEXT),

ENTER, 1, 0, *(f)*, LBL, GSB, 3, CHS, ENTER, ENTER, (NEXT),

1, 0, *(f)*, LBL, GSB, VSCL, VXPD, 0, WFM, 1, *(f)*, >WFM, (NEXT),

1, ., 3, 3, 3, 3, 3, 3, CHS, VXPD, HSCL, 5, *, *(f)*, HPRGT, (NEXT),

0, WFM, 1, *(f)*, VS, STOP, (NEXT),

(f), LNN, 0, 5, *(f)*, DOTS, *(f)*, PAUSE, VECT, *(f)*, PAUSE, 5, *(f)*, LBL, (NEXT),

GOTO, (NEXT),

(f), LNN, 1, 0, 2, *(f)*, >CNS, CLX, 1, CNS, *(f)*, >ORD, 1, CNS, 0, (NEXT),

CNS, +, 1, *(f)*, >CNS, 1, -, 2, CNS, X<>Y, *(f)*, >ORD, (NEXT).

ITRP, (*f*) RTN, (NEXT).

A listing of the program as it will appear on the 7854 crt follows, including the line numbers automatically added. This may be used to check the accuracy of the program as entered.

```
000 1024 >P/W TIME DOTS OFF 0 WFM 0 *
001 P/W 10 / >HSCL P/W 6 / 0 >CNS CLS 1
002 >CNS 3CHS ENTER 3 ENTER 10 LBL GSB
003 3 ENTER 3CHS ENTER 10 LBL GSB
004 3CHS ENTER 3 ENTER 10 LBL GSB
005 3 ENTER ENTER 10 LBL GSB 0 ENTER
006 ENTER 10 LBL GSB 3CHS ENTER ENTER
007 10 LBL GSB VSCL VXPD 0 WFM 1 >WFM
008 1.333333CHS VXPD HSCL 5 * HPRGT
009 0 WFM 1 VS STOP
010 L05 DOTS PAUSE VECT PAUSE 5 LBL
011 GOTO
012 L10 2 >CNS CLX 1 CNS >ORD 1 CNS 0
013 CNS + 1 >CNS 1 - 2 CNS X<>Y >ORD
014 ITRP RTN
```

2874-358

After the program has been entered into the 7854 memory, sequentially press the EXECUTE, STORED, *(f)*, and START keys to generate the calibration waveform. The resulting waveform is a rectangle that is horizontally and vertically bisected to form four, smaller, equal rectangles.

GB2. ADJUST DISPLAY OFFSETS AND GAINS (A29R1205, A18R65, A29R1300, A18R81)

NOTE

First perform step GB1, then proceed.

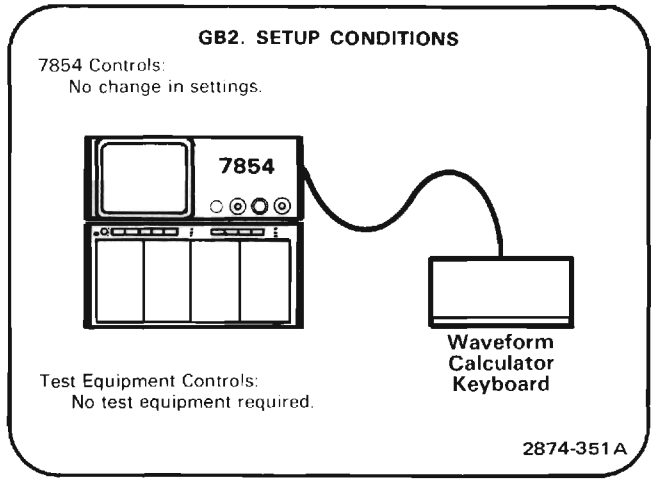

a. **EXAMINE**—The crt display for horizontal centering of the calibration waveform within 0.05 division at graticule center.

b. **ADJUST**—The Horizontal Offset adjustment, R1205 (located on the Display Board A29) to align the vertical line segment bisecting the calibration waveform with the vertical center line of the crt graticule.

c. **EXAMINE**—The crt display for vertical centering of the calibration waveform within 0.05 division at graticule center.

d. **ADJUST**—The RO-WFM Ctr adjustment, R65 (located on the Vertical Amplifier Board A18) to align the horizontal line segment bisecting the calibration waveform with the horizontal center line of the crt graticule.

e. **EXAMINE**—The crt display for horizontal alignment of the left and right sides of the calibration waveform with the second and tenth vertical graticule lines within 0.05 division.

f. **ADJUST**—The Horizontal Gain adjustment, R1300 (located on the Display Board A29) to align the sides of the calibration waveform with the second and tenth vertical-graticule lines.

g. **EXAMINE**—The crt display for vertical alignment of the top and bottom of the calibration waveform with the second and eighth horizontal graticule lines within 0.05 division.

http://manoman.sqhill.com

h. **ADJUST**—The RO-WFM Gain adjustment, R81 (located on the Vertical Amplifier Board A18), to align the top and bottom of the calibration waveform with the second and eighth horizontal-graticule lines.

GB3. ADJUST VECTOR OFFSETS AND GAINS (A29R1625, A29R1720, A29R1620, A29R1621)

NOTE

If the preceeding step was not performed, first perform step GB1, then proceed.

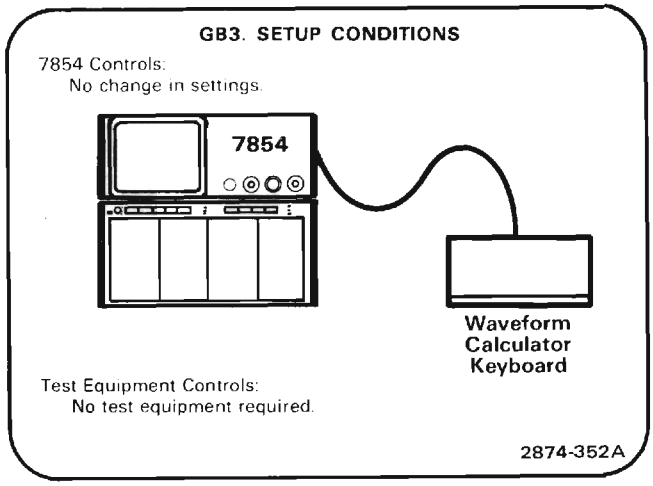

a. Press the RUN pushbutton on the remote WAVEFORM CALCULATOR keyboard to obtain a display alternating between dot and vector modes.

b. **EXAMINE**—The crt display for a vertical shift between dot and vector displays at graticule center less than or equal to 0.05 division.

c. **ADJUST**—The Vertical Vectors Offset adjustment, R1625 (located on the back of the Display Board A29), for no vertical shift between dot and vector displays at graticule center.

d. **EXAMINE**—The crt display for a horizontal shift between dot and vector displays at graticule center, less than or equal to 0.05 division.

e. **ADJUST**—The Horizontal Vectors Offset adjustment, R1620 (located on the back of the Display Board A29), for no horizontal shift between dot and vector displays at graticule center.

f. **EXAMINE**—The crt display for vertical overlaying of the dot and vector displays at the second and eighth horizontal graticule lines within 0.05 division.

g. **ADJUST**—The Vertical Vectors Gain adjustment, R1720 (located on the back of the Display Board A29) to vertically overlay the dot and vector displays.

h. **EXAMINE**—The crt display for horizontal overlaying of the dot and vector displays at the second and tenth vertical-graticule lines within 0.05 division.

i. **ADJUST**—The Horizontal Vectors Gain adjustment, R1621 (located on the back of the Display Board A29) to horizontally overlay the dot and vector displays.

GB4. ADJUST CHARACTER DISPLAY (A29R1100, A29R1106, A29R1200)

NOTE

If the preceding step was not performed, first perform step GB1, then proceed.

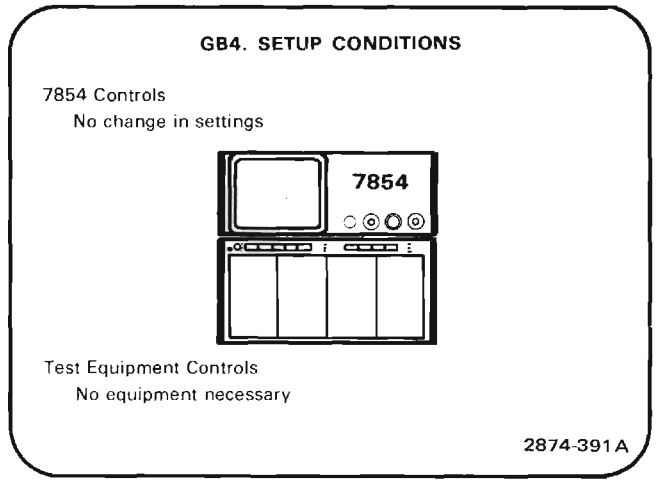

a. Disconnect MEMORY BACKUP POWER if applied to the instrument.

b. Momentarily turn the POWER switch OFF to ensure that memory contents are at their default values when instrument power is reapplied. Turn the POWER switch on.

c. Press the STORED pushbutton on the front-panel keyboard to obtain a display of the default data stored in memory.

d. **EXAMINE**—The top row of the character readout display for equal margins between the graticule edges and the ends of the character line within 0.1 division.

e. **ADJUST**—The Character Horizontal Gain adjustment, R1200 (located on the Display Board A29), to equalize the margins at the ends of the top character line displayed.

f. **EXAMINE**—That the top and bottom lines of displayed character information are vertically centered within 0.1 division.

http://manoman.sqhill.com

g. **ADJUST**—The Character Vertical Offset adjustment, R1106 (located on the Display Board A29), to vertically center the top and bottom lines of displayed characters about the graticule center.

h. **EXAMINE**—That the character lines are displayed in the top half of the upper graticule division and in the bottom half of the lower graticule division.

i. **ADJUST**—The Character Vertical Gain adjustment, R1100 (located on the Display Board A29), to center the displayed character lines in the top half of the upper graticule division and the bottom half of the lower graticule division.

http://manoman.sqhill.com

GC. DISPLAY SYSTEM

NOTE

(ALTERNATE PROCEDURE FOR OPTION 0D; TO BE USED ONLY IN THE ABSENCE OF THE CALCULATOR KEYBOARD)

Equipment Required: (Numbers correspond to those listed in Table 4-3, Test Equipment).

2. Amplifier	14. Coaxial cable (one 42-inch required)
4. Time base	20. Low-Capacitance screwdriver

Shaded lines identify Performance Requirement CHECK.

GC1. DISPLAY SYSTEM PRELIMINARY SETUP

a. Perform the Adjustment and Performance Check Power-Up sequence. MEMORY BACKUP POWER must be disconnected before performing steps GC3 and GC5.

b. Refer to Section 5, Instrument Options, and the Change Information at the rear of this manual for any modifications which may affect this procedure.

c. See the **TEST POINT AND ADJUSTMENT LOCATIONS G** foldout page in Section 7, Diagrams and Circuit Board Illustrations.

d. Set the 7854 Controls as follows:

POWER switch ..... On (pushbutton in)
VERTICAL MODE ..... LEFT
VERT TRACE SEPERATION (B) ..... Midrange
A TRIGGER SOURCE ..... VERT MODE
HORIZONTAL MODE ..... B
B INTENSITY ..... fully counterclockwise
B TRIGGER SOURCE ..... VERT MODE
GRAT ILLUM ..... Midrange
READOUT intensity ..... Midrange
STORED INT ..... Midrange

GC2. PRESET CHARACTER DISPLAY (A29R1100, A29R1200, A29R1106)

NOTE

First perform step CG1, then proceed.

GC2. SETUP CONDITIONS

7854 Controls:
No change in settings.

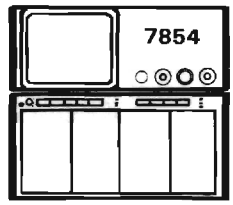

Test Equipment Controls:
No equipment necessary.

2874-337A

a. Press the STORED pushbutton on the front-panel keyboard to obtain a character readout display.

b. **EXAMINE**—The crt display for viewable character readout display.

c. **ADJUST**—Preset the Character Vertical Gain adjustment, R1100 (located on the Display board A29), to vertically position all character readout information within the graticule area.

d. **ADJUST**—Preset the Character Horizontal Gain adjustment, R1200 (located on the Display Board A29), to horizontally position all character readout information within the graticule area.

http://manoman.sqhill.com

e. **ADJUST**—The Character Vertical Offset adjustment R1106 (located on the Display Board A29), to vertically center the character readout information on the graticule.

f. **ADJUST**—The Character Vertical Gain adjustment, R1100 (located on the Display Board A29), to expand the character readout display vertically almost to the graticule edges (top and bottom).

GC3. ADJUST DISPLAY HORIZONTAL CENTERING AND GAIN (A29R1205, A29R1300)

NOTE

If the preceding step was not performed, first perform step CG1, then proceed.

GC3. SETUP CONDITIONS

7854 Controls:
No change in settings.

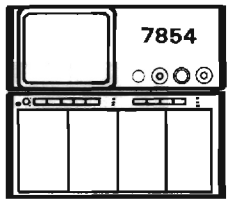

Test Equipment Controls:
No equipment necessary.

2874-338A

a. Disconnect MEMORY BACKUP POWER if applied to the instrument.

b. Momentarily turn the POWER switch OFF to ensure that memory contents are at their default values when instrument power is reapplied. Turn the POWER switch on.

c. Press the STORED pushbutton on the front-panel keyboard to obtain a display of the default data in memory (zero reference line).

d. Sequentially press the *f* and CRS1 pushbuttons on the front-panel keyboard to obtain a cursor display.

e. Using the CRS1> and CRS1< pushbuttons on the front-panel keyboard, position the cursor so the horizontal cursor position readout on the crt indicates HCRD=5S.

f. **EXAMINE**—The cursor should align with the center vertical graticule line within 0.05 division.

g. **ADJUST**—The Horizontal Offset adjustment, R1205 (located on the Display Board A29), to align the cursor with the center vertical graticule line.

h. Using the CRS1< and CRS1> pushbuttons, position the cursor until the horizontal cursor position readout indicates HCRD=996.1 ms.

i. Set the STORED INTensity control to about 1/3 of its range and set the FOCUS control for a well defined display.

j. **EXAMINE**—The cursor should align with the second vertical graticule line within 0.05 division.

k. **ADJUST**—The Horizontal Gain adjustment, R1300 (located on the Display board A29), so the cursor is slightly to the left of but touching the second vertical graticule line.

l. Press the CRS1> pushbutton so that the horizontal cursor position readout indicates HCRD=1.016S.

m. **EXAMINE**—The cursor should have moved slightly to the right of the second vertical graticule line.

GC4. ADJUST DISPLAY VERTICAL CENTERING AND GAIN (A18R65, A18R81)

NOTE

The Trace Rotation must have been properly set in step B8 before doing this procedure.

If the preceding step was not performed, first perform step GC1, then proceed.

GC4. SETUP CONDITIONS

7354 Controls:
B INTENSITY ..... Midrange

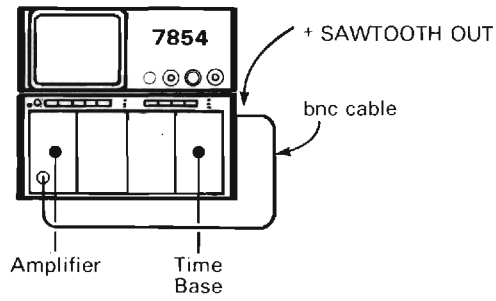

Test Equipment Controls:
Amplifier (1 MΩ input)
Deflection Factor ..... 1 V/div
Input Coupling ..... Dc

Time Base
Sweep Rate ..... 50 μs/div
Triggering ..... Auto,Ac,External

2874-339A

http://manoman.sqhill.com

a. Set the SWP switch on the A15 Output Signal board to the B position.

b. With a bnc cable connected from the rear-panel ±SAWTOOTH OUT output to the input of the Amplifier unit, press the SCOPE pushbutton on the front-panel keyboard to obtain a real-time display.

c. Using the amplifier unit's Position control, position the trace so it crosses the intersection of both the vertical and horizontal graticule center lines.

d. Sequentially press the STORED and AVERAGE 10 pushbuttons on the front-panel keyboard to obtain a digitized display of the input signal.

e. Sequentially press the *f* and CRS1 pushbuttons on the front-panel keyboard to obtain a cursor display. Using the CRS1> pushbutton on the front-panel keyboard, move the cursor until the vertical cursor position readout is as close as possible to -3V.

f. Press the CRS2-1 pushbutton on the front-panel keyboard to obtain a 2-cursor display.

g. Press the CRS2< pushbutton on the front-panel keyboard until the vertical difference between cursors as indicated by the character readout is as close as possible to △VCRD=6V.

h. **EXAMINE**—That the cursors are vertically equidistant from graticule center within 0.05 division.

i. **ADJUST**—The RO-WFM Ctr adjustment, R65 (located on the Vertical Amplifier board A18), until the cursors are vertically centered about the center horizontal graticule line.

j. **EXAMINE**—That the cursors vertically align with the second and eighth horizontal graticule lines within 0.05 division.

k. **ADJUST**—The RO-WFM Gain adjustment, R81 (located on Vertical Amplifier Board A18), to vertically align the cursors with the graticule lines.

GC5. ADJUST CHARACTER DISPLAY (A29R1100, A29R1106, A29R1200)

NOTE

If the preceding step was not performed, first perform step GC1, then proceed.

GC5. SETUP CONDITIONS

7854 Controls:
No change in settings.

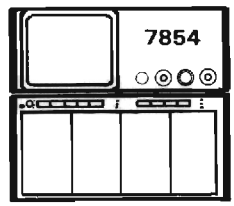

Test Equipment Controls:
No equipment necessary.

2874-340A

a. Disconnect MEMORY BACKUP POWER if applied to the instrument.

b. Momentarily turn the POWER switch OFF to ensure that memory contents are at their default values when instrument power is reapplied. Turn the POWER switch on.

c. Press the STORED pushbutton on the front-panel keyboard to obtain a display of the default data stored in memory.

d. **EXAMINE**—The top row of the character readout display for equal margins between the graticule edges and the ends of the character line within 0.1 division.

e. **ADJUST**—The Character Horizontal Gain adjustment, R1200 (located on the Display Board A29), to equalize the margins at the ends of the top character line displayed.

f. **EXAMINE**—That the top and bottom lines of displayed character information are vertically centered within 0.1 division.

g. **ADJUST**—The Character Vertical Offset adjustment, R1106 (located on the Display Board A29), to vertically center the top and bottom lines of displayed characters about the graticule center.

h. **EXAMINE**—That the character lines are displayed in the top half of the upper graticule division and in the bottom half of the lower graticule division.

i. **ADJUST**—The Character Vertical Gain adjustment, R1100 (located on the Display Board A29), to center the displayed character lines in the top half of the upper graticule division and the bottom half of the lower graticule division.

http://manoman.sqhill.com

H. VERTICAL AND HORIZONTAL PICKOFF SYSTEM

Equipment Required: (Numbers correspond to those listed in Table 4-3, Test Equipment).

1. Test Oscilloscope
4. Time base
5. Signal Standardizer
9. Time-mark generator
12. X10 Probe
14. Coaxial cable (one 18-inch, one 42-inch required)
16. 2X Attenuator
20. Low capacitance screwdriver
22. 18" jumper wire
24. Battery (memory backup)

Shaded lines identify Performance Requirement CHECK.

H1. PICKOFF SYSTEM PRELIMINARY SETUP

NOTE

Part (a) below should be omitted when performing steps H1 and H8.

Error warnings will be issued through the following adjustment procedures; they are normal and should be ignored.

a. With the POWER switch OFF, remove the MPU board from the Mother Board as per instructions in the Maintenance Section of this manual and remove the IACQ (acquire interrupt) jumper from the board (upper right hand corner). Re-install the MPU board to its original position.

b. Perform the Adjustment and Performance Check Power-Up Sequence.

c. Refer to Section 5, Instrument Options, and the Change Information at the rear of this manual for any modifications which may affect this procedure.

d. See the **TEST POINT AND ADJUSTMENT LOCATIONS H** foldout page in Section 7, Diagrams and Circuit Board Illustrations.

e. Set the 7854 controls as follows:

POWER switch ..... On (pushbutton in)
VERTICAL MODE ..... RIGHT
VERT TRACE SEPARATION (B) ..... Midrange
A TRIGGER SOURCE ..... VERT MODE
A INTENSITY ..... Midrange
HORIZONTAL MODE ..... A
B INTENSITY ..... Midrange
B TRIGGER SOURCE ..... VERT MODE
FOCUS ..... Midrange
READOUT intensity ..... OFF (in detent)
GRAT ILLUM ..... As desired

H2. ADJUST DIGITIZER LSB MATCH AND LSB CODE (A25R515, A25R623)

NOTE

First perform step H1, then proceed.

H2. SETUP CONDITIONS

7854 Controls:
CRT DISPLAY ..... SCOPE

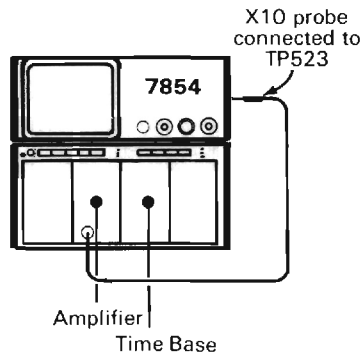

Test Equipment Controls:
Time Base
Sweep Rate ..... 2 ms/div
Triggering ..... Auto,Ac,External

Amplifier
Deflection Factor ..... 0.1 V/div(1 Volt/div at probe tip)
Input Coupling ..... Dc

2874-354A

http://manoman.sqhill.com

a. Set the Sweep Selector switch, S3 (on the Signal Output Board A15), to the A position.

b. Move the plug on P509 one pin to the right.

c. Connect a jumper wire from the ±SAWTOOTH OUT to TP502.

d. **EXAMINE**—That all displayed pulses (both positive and negative) are of equal width within 50%.

e. **ADJUST**—Vary the LSB Code and LSB Match adjustments, R515 and R623 (on the Digitizer Board A25), throughout their range, noting their affect on the displayed waveform. Set both to approximately midrange.

f. **ADJUST**—R515 for optimim matching of all displayed pulse widths both positive and negative. (One pulse may be grossly large or small and will not be affected by adjusting R515. Ignore it when making the adjustment in this step.)

g. **ADJUST**—R623 to match the remaining pulse width to the other displayed pulses (approximately 1 division).

h. Repeat parts (f) and (g) above as necessary to obtain optimum width matching of all pulses displayed.

i. Remove the oscilloscope probe and jumper wire.

j. Re-install the plug at P509 to its original position.

NOTE

If further adjustment of the Digitizer System is required, omit the remainder of this step.

k. Turn the POWER switch OFF.

l. Remove the MPU board as per the instructions in the Maintenance section of this manual and re-install the IACQ jumper.

m. Re-install the MPU board.

H3. ADJUST VERTICAL AND HORIZONTAL PICKOFF AMPLIFIER CENTERING (A25R80, A9R45)

NOTE

If the previous step was not performed, first perform step H1, then proceed.

H3. SETUP CONDITIONS

7854 Controls:
- CRT DISPLAY ..... SCOPE
- VERTICAL MODE ..... LEFT

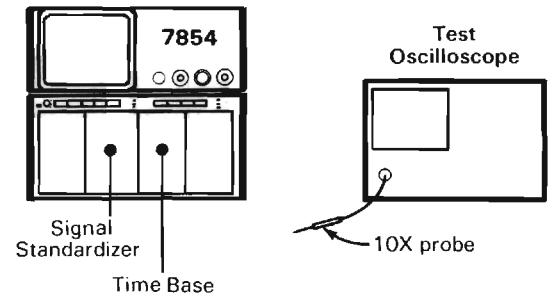

Test Equipment Controls:

Test Oscilloscope
- Vertical Deflection ..... 10 mv/div (100 mv/div at probe tip)
- Input Coupling ..... Gnd
- Sweep Rate ..... 0.1 ms/div
- Triggering ..... Auto,Ac,External

Time Base
- Sweep Rate ..... 0.1 ms/div
- Triggering ..... auto,Ac,Internal

Signal Standardizer
- Test Selector Switch ..... Vert or Horiz Com Mode
- Rep Rate ..... 10 KHz

2874-341A

a. Set test scope trace to graticule center.

b. Set test scope coupling switch to dc.

c. Connect the X10 probe of the test scope to the lower lead of R105 (100Ω, 1W resistor located near J141 on the Digitizer board).

d. **EXAMINE**—Test scope display for a deflection of less than 0.1 division from graticule center.

e. **ADJUST**—The Center adjustment, R80 (located on the Digitizer Board A25), to bring the test scope display to graticule center.

f. Move the Signal Standardizer to the LEFT VERT plug-in compartment.

g. Set the VERTICAL MODE switch to RIGHT.

http://manoman.sghill.com

h. **EXAMINE**—Test scope display for a deflection less than 0.1 division from graticule center.

i. **ADJUST**—If necessary, compromise the adjustment of the Center adjustment, R80, for optimum centering for the RIGHT and LEFT vertical channels.

j. **INTERACTION**—If R80 is adjusted, step H4 must be performed.

k. Move the Signal Standardizer to the A HORIZ compartment and the time-base to the LEFT VERT compartment.

l. Set the HORIZONTAL MODE switch to A and the VERTICAL MODE switch to LEFT.

m. Move the test scope probe to P64-2 (located on the Digitizer Board A25).

n. Set the test scope input coupling to ground and position the trace to graticule center.

o. Set the test scope input coupling to dc.

p. **EXAMINE**—Test scope display for a deflection from graticule center less than or equal to 0.1 division.

q. **ADJUST**—The Center adjustment, R45 (located on the Horizontal Channel Switch Board A9), to position the trace to graticule center. It will be necessary to remove the left side cover of the Signal Standardizer to make this adjustment.

r. Move the Signal Standardizer to the B HORIZ compartment.

s. Set the HORIZONTAL MODE switch to B.

t. **EXAMINE**—Test scope display for a deflection from graticule center less than or equal to 0.1 division.

u. **ADJUST**—If necessary, compromise the setting of the Center adjustment, R45, for optimum centering for both horizontal compartments.

v. **INTERACTION**—If R45 is adjusted, step H5 must be performed.

w. Remove test scope probe from P64-2 on the Digitizer board.

NOTE

If further adjustment of the digitizer system is required, omit the remainder of this step.

x. Turn the POWER switch OFF.

y. Remove MPU board as per the instructions in the Maintenance section of this manual and re-install the $\overline{\text{IACQ}}$ jumper.

z. Re-install the MPU board.

H4. CHECK/ADJUST VERTICAL SAMPLER OFFSET (A25R280)

NOTE

If the preceding step was not performed, first perform step H1, then proceed.

The realtime Vertical Centering in step F2 and the vertical RO-WFM CTR adjustment of either step GB2 or GC4 must be properly adjusted before performing this procedure.

H4. SETUP CONDITIONS

7854 Controls:
- HORIZONTAL MODE ..... A
- VERTICAL MODE ..... RIGHT

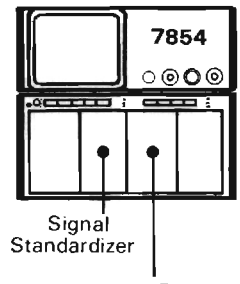

Test Equipment Controls:
- Time Base
  - Sweep Rate ..... 0.5 ms/div
  - Triggering ..... Auto,Ac,Internal

Signal Standardizer
- Signal Standardizer
  - Test Selector Switch ..... Vert or Horiz Com Mode
  - Rep Rate ..... 1 KHz

2874-342

a. Set the time-base unit triggering controls for a stable display.

b. Press the STORED and AQR pushbuttons on the front-panel keyboard in sequence to obtain a display of the digitized waveform. It may be necessary to set the STORED INTensity control for a well defined display.

c. **CHECK**—The crt display to be within 0.1 division of graticule center.

d. **ADJUST**—The Vert Pos offset adjustment, R280 (located on the Digitizer Board A25) to align the crt display with the graticule center.

http://manoman.sqhill.com

e. Move the Signal Standardizer to the LEFT VERT compartment.

f. Sequentially press the STOP, LEFT and AQR pushbuttons to obtain a display of the digitized waveform.

g. **CHECK**—The crt display to be within 0.1 division of graticule center.

h. **ADJUST**—If necessary, compromise the Vert Pos offset adjustment, R280 for optimum centering of the digitized waveform for both vertical channels.

i. Sequentially press the STOP, *f*, BOTH and AQR pushbuttons on the front-panel keyboard to obtain a display of the real-time and digitized waveforms.

j. **EXAMINE**—The crt display for vertical overlaying of the waveforms within 0.1 division.

k. Move the Signal Standardizer to the RIGHT VERT compartment.

l. Sequentially press the STOP, RIGHT (VERTICAL MODE switch), *f*, BOTH and AQR pushbuttons to obtain a display of the realtime and digitized waveforms.

m. **EXAMINE**—The crt display for vertical overlaying of the waveforms within 0.1 division.

n. **ADJUST**—If necessary, compromise the Vert Pos offset adjustment, R280, for optimum centering of the digitized waveforms and overlaying of the digitized waveform with the real-time waveform for both vertical channels.

o. Sequentially press the STOP, *f*, and CRS1 pushbuttons to obtain a cursor display.

p. Set the READOUT intensity control for a visible character display.

q. Position the cursor to mid-screen by pressing the CRS1> pushbutton on the front panel keyboard.

r. **CHECK**—The character readout should indicate a vertical displacement from graticule center less than or equal to VCRD=(±)100 m (±0.1 div).

s. Move the Signal Standardizer to the LEFT VERT compartment.

t. Press the STOP, LEFT (VERTICAL MODE switch), *f*, BOTH and AQR pushbuttons in sequence to obtain a display of the realtime and digitized waveforms.

u. Repeat parts (o) through (r) for the LEFT VERT compartment.

NOTE

If further adjustment of the digitizer system is required, omit the remainder of this step.

v. Turn the POWER switch OFF.

w. Remove the MPU board as per the instructions in the Maintenance section of the manual and re-install the $\overline{\text{IACQ}}$ jumper.

x. Re-install the MPU board.

H5. CHECK/ADJUST HORIZONTAL SAMPLER OFFSET (A25R380)

NOTE

If the preceding step was not performed, first perform step H1, then proceed with the following instructions.

H5. SETUP CONDITIONS

7854 Controls:
HORIZONTAL MODE ..... B
VERTICAL MODE ..... LEFT

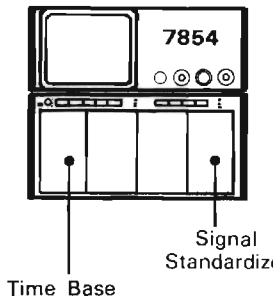

Test Equipment Controls:
Time Base
Sweep Rate ..... 0.5 ms/div
Triggering ..... Auto,Ac,Internal

Signal Standardizer
Test Selector Switch ..... Vert or Horiz Com Mode
Rep Rate ..... 1 kHz

2874-307

a. Move jumper P630 to its top-most position.

b. Sequentially press the STOP, B, LEFT, STORED and AQR pushbuttons on the front-panel keyboard to obtain a display of the digitized waveform.

c. Set the time-base unit triggering controls for a stable display.

http://manoman.sqhill.com

d. **CHECK**—The crt display for alignment of the digitized waveform with the graticule center within 0.1 division.

e. **ADJUST**—The Horiz Pos Offset adjustment, R380 (located on the Digitizer Board A25) to overlay the digitized waveform with the graticule center.

f. Move the Signal Standardizer to the A HORIZ compartment.

g. Sequentially press the STOP, A (HORIZONTAL MODE switch), STORED and AQR pushbuttons to obtain a display of the digitized waveform.

h. **CHECK**—The crt display for alignment of the digitized waveform with the graticule center within 0.1 division.

i. **ADJUST**—If necessary, compromise the Horiz Pos Offset adjustment, R380 for optimum alignment of the digitized waveform with the graticule center for both horizontal channels.

j. Sequentially press the STOP, *f* and CRS1 pushbuttons to obtain a cursor display.

k. Set the READOUT intensity control for a visible character display.

l. Position the cursor to horizontal graticule center by pressing the CRS1> pushbutton on the front-panel keyboard.

m. **CHECK**—The character readout should indicate a horizontal displacement from the left side of the gratiucle of HCRD=5.00 (±0.1).

n. Move the Signal Standardizer unit to the B HORIZ compartment.

o. Press the STOP B (HORIZONTAL MODE), STORED and AQR pushbuttons in sequence to obtain a display of the digitized waveform.

p. Repeat parts (j) through (m) for the B HORIZ compartment.

q. Re-install jumper P630 to its lower-most position.

NOTE

If further adjustment of the digitizer system is required, omit the remainder of this step. If step H6 is to be performed, continue with this procedure.

r. Turn the POWER switch OFF.

s. Remove the MPU board as per the instructions in the Maintenance section of the manual and re-install the $\overline{\text{IACQ}}$ jumper.

t. Re-install the MPU board.

H6. EXAMINE DIGITIZER HORIZONTAL MATCHING (A25R228, A25R328)

NOTE

If the preceding step was not performed, first perform step H1, then proceed.

H6. SETUP CONDITIONS

7854 Controls:
- HORIZONTAL MODE ..... A
- CRT DISPLAY ..... SCOPE

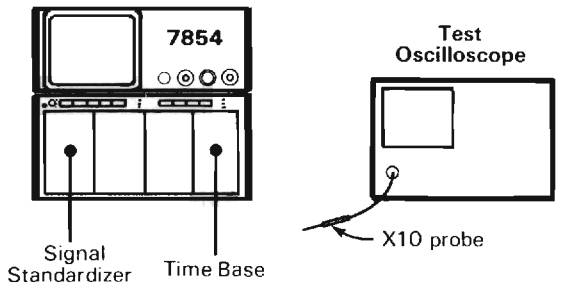

Test Equipment Control:

Test Oscilloscope
- Vertical Deflection ..... 50 mv/div (500 mv/div at probe tip)
- Input Coupling ..... DC
- Sweep Rate ..... 2 ns/div
- Triggering ..... Auto,Ac,Internal

Time Base
- Sweep Rate ..... 1 ns/div
- Triggering ..... Auto,Ac,Internal

Signal Standardizer
- Test Selector Switch ..... Vert or Horiz Com Mode
- Rep Rate ..... 1 MHz

2874-344A

CAUTION

The components to which the test scope probe is attached in this step are very fragile and susceptible to static damage. Use care when attaching and removing the probe.

a. Connect the test oscilloscope probe to the junction of R243 and T237 (the 39Ω resistor at the rear of the vertical sampling bridge and the associated toroid lead). Connect the probe ground to TP GND.

http://manoman.sqhill.com

b. Set the test scope variable volts/div, vertical position and horizontal position controls for a 6 division display centered on the test scope crt graticule.

c. Set the test oscilloscope triggering controls to obtain a stable display triggered on the falling edge of the pulse.

d. **EXAMINE**—Displayed pulse width at vertical graticule center (50% point) to be less than 11 ns.

e. **ADJUST**—Vert Strobe Width adjustment, R228 (on the Digitizer Board A25), so the pulse width at vertical graticule center is approximately equal to but less than 11 ns.

f. Remove the test scope probe and connect it to the junction of R343 and T337 (the 39Ω resistor at the rear of the horizontal sampling bridge and the associated toroid lead).

g. Set the test scope variable volts/div, vertical position and horizontal position controls for a 6-division display centered on the test scope crt graticule.

h. **EXAMINE**—Displayed pulse width at vertical graticule center (50% point) to be less than 11 ns.

i. **ADJUST**—Horiz Strobe Width adjustment, R328 (on the Digitizer Board A25), so the pulse width at vertical graticule center is approximately equal to but less than 11 ns.

j. Remove the test scope probe.

l. Set the Signal Standardizer Test selector switch to + Step Resp.

m. Set the Signal Standardizer Amplitude and Position controls for a 6-division display, centered on the crt graticule.

n. Vary the time base Position control to move the vertical midpoint on the rising edge of the displayed pulse to vertical and horizontal graticule center.

o. Sequentially press the *f*, BOTH and AQR pushbutton on the front-panel keyboard to obtain both a realtime and a continuously digitized display. It may be necessary to vary the B INTENSITY and STORED intensity controls to make both traces easily visible.

p. **EXAMINE**—Displayed traces should overlay within 0.1 division.

q. **ADJUST**—If the digitized display is to the right of the realtime display, adjust the Horiz Strobe Width adjustment, R328, clockwise to overlay the realtime and digitized displays at graticule center.

r. **ADJUST**—If the digitized display is to the left of the realtime display, adjust the Vert Strobe Width adjustment, R238, clockwise to overlay the realtime and digitized displays at graticule center.

s. **ADJUST**—If adjustment of either R328 or R238 as described in parts (q) and (r) above will not horizontally overlay the traces at graticule center, adjust the remaining Strobe Width adjustment (R238 or R328) clockwise to overlay the digitized and realtime displays.

NOTE

If this concludes the required Digitizer System adjustments omit the remainder of this step.

t. Turn the POWER switch OFF.

u. Remove the MPU board as per the instructions in the Maintenance section of this manual and remove the IACQ jumper.

v. Re-install the MPU board and press the POWER switch to on.

H7. ADJUST VERTICAL STEP RESPONSE (A25R13, A25R12, A25R11, A25R60, A25C61, A25R58, A25R40, A25C40, A25C62, A19C195, A19R195, A25C245)

NOTE

If the preceding step was not performed, first perform step H1, then proceed.

H7. SETUP CONDITIONS

7854 Controls:
HORIZONTAL MODE ..... A
VERTICAL MODE ..... RIGHT

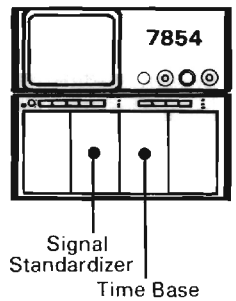

Test Equipment Controls:
Time Base
Sweep Rate ..... 5 μs/div
Triggering ..... Auto,Ac,Internal

Signal Standardizer
Test Selector Switch ..... Vert or Horiz + Step
Rep Rate ..... 10 kHz

2874-343

a. Sequentially press the *f*, BOTH and AQR pushbutons on the front-panel keyboard to obtain a realtime and a continuously digitized display.

http://manoman.sqhill.com

b. Set the Signal Standardizer Amplitude control to maximum (fully clockwise) and use its Position control to position the top of the displayed realtime step one division above graticule center.

c. Using the time-base Position control, position the leading edge of the realtime positive step to 1 division from the left edge of the graticule.

d. Sequentially press the STOP, STORED and AQR pushbuttons on the front-panel keyboard to obtain a continuously digitized display.

e. **EXAMINE**—That the first 3.5μs of the step is within 0.05 division of the remainder of the step.

f. **ADJUST**—the Vert Unity Dot response adjustment, C262, for minimum difference between the first 3.5μs and the remainder of the step; adjustment of C262 is accomplished by changing the length or position of the wire lead inserted into the body of C262.

g. Set the Signal Standardizer Amplitude and Position controls for a 6-division square-wave, vertically centered on the graticule.

h. Set the time-base triggering controls for a stable display.

i. **EXAMINE**—The displayed pulse for optimum flat top within 0.3 div (peak to peak) for the first 20 ns after step and within 0.06 division thereafter, with time-base sweep rates and Signal Standardizer Rep Rates set as in Table 4-7.

NOTE

The Realtime Vertical system (step F) must be fully calibrated prior to performing the following adjustments.

i. **ADJUST**—Compensation adjustments R13, R12, R11, R58, C40, R40, C61, R60, C62 ,C245, C195 and R195 according to Table 4-7 for optimum flat top of the displayed waveform.

j. Set the Signal Standadizer Test selector switch to Vert or Horiz - Step and use the Position control to center the 6-division square-wave display on the crt.

k. **EXAMINE**—Displayed pulse for optimum flat bottom within 0.3 division (peak to peak abberations) for the first 20 ns after step and within 0.06 division thereafter with time base sweep rates and Signal Standardizer Rep Rates set as in Table 4-7.

l. **ADJUST**—If necessary, compromise the settings of the adjustments given in Table 4-7 for optimum step response to both positive and negative transitions.

m. Move the Signal Standardizer to the LEFT VERT compartment.

TABLE 4-7
Vertical Step Response Adjustments
(Signal Rep Rate vs Sweep Rate)

Adjustment	Signal Standardizer Rep Rate	Time Sweep Rate
no adj.	100 Hz	2 ms/div
A25R13	1 kHz	0.2 ms/div
A25R12	10 kHz	20 μs/div
A25R11	100 kHz	2 μs/div
A25R58	1 MHz	100 ns/div
A25C40,A25R40	1 MHz	10 ns/div
A25C61, A25R60, A25C62, A25C245 also A19C195, A19R195 (on the Vertical Channel Switch Board A19)	1 MHz	2 ns/div

n. Sequentially press the STOP, LEFT (VERTICAL MODE switch), STORED and AQR pushbuttons to obtain a continuously digitized display.

o. Set the Signal Standardizer Amplitude and Position controls to obtain a 6-division square-wave display centered on the crt graticule.

p. **EXAMINE**—Displayed pulse to meet the criteria for positive and negative transitions as in parts (h) and (k).

q. **ADJUST**—If necessary, compromise the settings of the adjustments given in Table 4-7 for optimum step response to positive and negative transitions for both the RIGHT VERT and LEFT VERT compartments.

r. **INTERACTION**—Adjustment of C245 will affect Vertical Digitizer gain and offset. If adjusted, steps H4 and H8 must be performed.

NOTE

If further adjustment of the digitizer system is required, omit the remainder of this step.

s. Turn the POWER switch to OFF.

t. Remove the MPU board as per instruction in the Maintenance section of this manual and re-install the $\overline{\text{IACQ}}$ jumper.

u. Re-install the MPU board.

http://manoman.sqhill.com

H8. CHECK/ADJUST DIGITIZER VERTICAL GAIN (A25R290)

NOTE

If the preceding step was not performed, first perform step H1, excluding part a, then proceed with the following instructions beginning at part e.

The RO-WFM Gain adjustment in either step GB2 or GB4 must be properly adjusted before performing the following procedure.

H8. SETUP CONDITIONS

7854 Controls:
VERTICAL MODE ..... LEFT

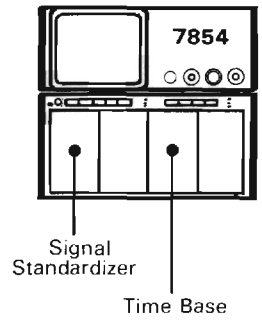

Test Equipment Controls:
Time Base
Sweep Rate ..... 200 μs/div
Triggering ..... Auto,Ac,Internal

Signal Standardizer
Test Selector Switch ..... Vert or Horiz Gain
Rep Rate ..... 10 kHz

2874-346

a. Press the POWER switch to OFF.

b. Remove the MPU board as per the instructions in the Maintenance section of this manual and re-install the $\overline{\text{IACQ}}$ jumper.

c. Re-install the MPU board.

d. Press the POWER switch to on.

e. Press the SCOPE pushbutton on the front-panel keyboard to obtain a realtime display. It may be necessary to set the A INTENSITY control for an easily visible display.

f. Set the time base Triggering and/or Holdoff controls for a stable staircase display.

g. Set the Signal Standardizer Position control to center the waveform on the crt.

h. Sequentially press the STORED and AVERAGE 10 pushbuttons on the front-panel keyboard to obtain a digitized staircase display. It may be necessary to vary the STORED INTensity control to obtain a visible display.

i. Press the CRS2-1 pushbutton on the front-panel keyboard to obtain a cursor display.

j. Press the CRS1> and <CRS2 pushbuttons on the front-panel keyboard to position the cursors to the midpoints of the steps, 3 divisions above and 3 divisions below graticule center (6 divisions apart vertically).

k. Turn the READOUT intensity control on and set it for a viewable character display.

l. **CHECK**—The character readout to be between ΔVCRD = ±5.94 and ΔVCRD = ±6.06.

m. **ADJUST**—The sampler Gain adjustment, R290, until the requirement of part (l) is met. (It will be necessary to adjust R290 a small amount and then press the AVERAGE 10 pushbutton on the front-panel keyboard to obtain new cursor information: repeat as necessary.)

n. **CHECK**—Vertical difference between cursors to be 6 divisions ±0.06 division in relation to the crt graticule.

o. **ADJUST**—If necessary, compromise the setting of R290 to bring both the numeric data (cursor readout) and the displayed curve into the limits given in parts (l) and (n) respectively.

p. **INTERACTION**—Adjustment R290 may affect Horizontal offset, step H5.

NOTE

If this concludes the required Digitizer System adjustments omit the remainder of this step.

q. Turn the POWER switch OFF.

r. Remove the MPU board as per the instructions in the Maintenance section of this manual and remove the $\overline{\text{IACQ}}$ jumper.

s. Re-install the MPU board and press the POWER switch to on.

http://manoman.sqhill.com

H9. EXAMINE DIGITIZER BANDWIDTH

NOTE

If the preceeding step was not performed, first perform step F1, then proceed.

H9. SETUP CONDTIONS

7854 Controls:
VERTICAL MODE ..... LEFT

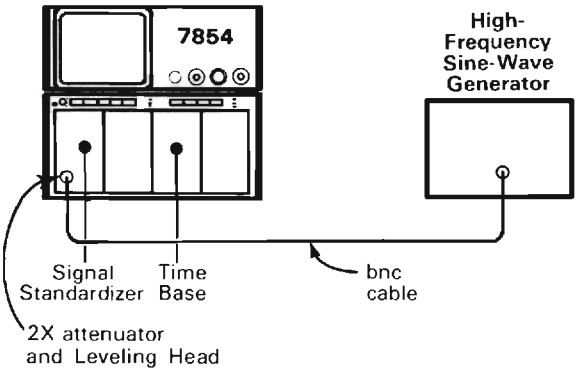

Test Equipment Controls
Time Base
Sweep Rate ..... 20 μs/div
Triggering ..... Auto,Ac,Internal

Signal Standardizer
Test Selector Switch ..... Vert or Horiz Freq Resp

High-Frequency Sine-Wave Generator
Reference Frequency ..... 6 MHz

2874-365

a. Sequentially press the STORED and AQR pushbuttons on the front-panel keyboard to obtain a continuously digitized display.

b. With the High Frequency Sine-Wave Generator connected to the Signal Standardizer Aux In-CW In (Freq Resp) input via a 2X attenuator, set the Signal Standardizer Amplitude control fully clockwise.

c. Set the high-frequency sine-wave generator for a 10-division display at the reference frequency (less than 10 MHz). (To obtain a 10-division display, first set for 8 divisions, then vertically position the display 1 division down using the Signal Standardizer Position control; then set the sine-wave generator to return the top of the display to the top of the graticule.)

d. Set the Signal Standardizer Amplitude and Position controls for a 6-division display centered on the graticule. (The CW leveled indicator should be lit.)

e. Set the time base Triggering controls for a stable sine-wave display.

f. Without changing the output amplitude, increase the generator frequency to 475 MHz.

g. Set the time base sweep rate to 10 ns/division and the sweep Mag switch to X10.

h. **EXAMINE**—Crt display to be greater then or equal to 4.24 division peak-to-peak.

i. Move the Signal Standardizer to the RIGHT VERT compartment (leave signal connected) and set the VERTICAL MODE switch to RIGHT.

j. **EXAMINE**—Repeat parts (b) through (h) for the RIGHT VERT compartment.

k. **ADJUST**—If the guidelines of step (h) or (j) were not met, perform steps H3, H4, H7 and H8.

NOTE

If further adjustment of the Digitizer System is required, omit the remainder of this step.

l. Turn the POWER switch to OFF.

m. Remove the MPU board as per the instructions in the maintenance section of this manual and re-install the $\overline{\text{IACQ}}$ jumper.

n. Re-install the MPU board and press the POWER switch to on.

H10. ADJUST HORIZONTAL UNITY DOT RESPONSE (A25C362)

NOTE

If the preceding step was not performed, first perform step H1, then proceed.

H10. SETUP CONDITIONS

7854 Controls:
VERTICAL MODE ..... LEFT
CRT DISPLAY ..... SCOPE

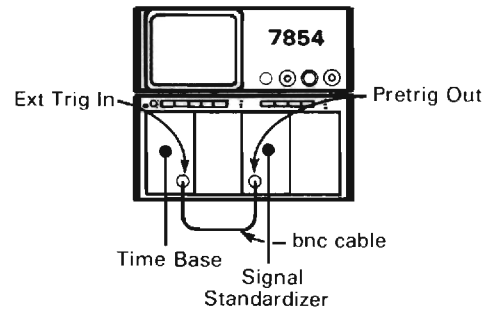

Test Equipment Controls:
Time Base
Sweep Rate ..... 5 μs/div
Triggering ..... Auto,Ac,External

Signal Standardizer
Test Selector Switch ..... Vert or Horiz +Step
Rep Rate ..... 10 kHz

2874-348

http://manoman.sqhill.com

a. With a bnc cable connected from the Signal Standardizer Pretrig Out to the time base Ext Trig In, set the Signal Standardizer Amplitude and time base Triggering controls for a stable, 6 division display, triggered on the positive slope.

b. Sequentially press the STORED and AQR pushbuttons on the front-panel keyboard to obtain a continuously digitized display. It may be necessary to vary the STORED INTensity control to view the display.

c. Move jumper P630 to its topmost position to interchange the display axes.

d. Set the Signal Standardizer Amplitude control to midrange.

e. Set the time base Position control to move the transition of the displayed pulse to 4 divisions left of graticule center.

f. Set the Signal Standardizer Position control to move the top of the displayed pulse to 1 division above graticule center.

g. Set the Signal Standardizer Amplitude control to maximum (fully clockwise).

h. **EXAMINE**—The first 3.5μs of the displayed pulse should vertically align with the remainder of the displayed pulse within 0.05 division.

i. **ADJUST**—The Horiz Unity Dot Response adjustment, C362, should be adjusted for optimum vertical alignment of the first 3.5μs of the displayed pulse with the remainder of the displayed pulse.

j. Return jumper P630 to its original position.

NOTE

If further adjustment of the digitizer system is required, omit the remainder of this step.

k. Turn POWER switch to OFF.

l. Remove the MPU board as per the instructions in the Maintenance section of this manual and re-install the $\overline{\text{IACQ}}$ jumper.

m. Re-install the MPU board.

H11. CHECK/ADJUST DIGITIZER HORIZONTAL GAIN

NOTE

If the preceding step was not performed, first perform step H1, then proceed.

The horizontal Ctr and Gain adjustments in step E2 and the Horizontal Gain adjustment in either step GB2 or GC3 must be properly adjusted before performing the following procedure.

H11. SETUP CONDITIONS

7854 Controls:
- VERTICAL MODE ..... LEFT
- HORIZONTAL MODE ..... B

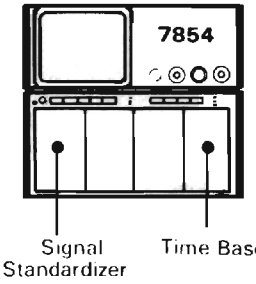

Test Equipment Controls:
- Time Base:
  - Sweep Rate ..... 50 μs/div
  - Triggering ..... Auto,Ac,Internal
- Signal Standardizer
  - Test Selector Switch ..... Vert or Horiz +Step
  - Rep Rate ..... 10 kHz

2874 355

a. Set the Signal Standardizer Amplitude and Position controls for a 6-division square-wave, centered on the crt graticule.

b. Set the time base Triggering and Holdoff controls for a stable display.

c. Use a screwdriver to set the time base unit front-panel Swp Cal adjustment for exactly one cycle per 2 horizontal divisions.

d. Sequentially press the STORED and AQR pushbuttons on the front panel keyboard to obtain a continuously digitized display.

e. **CHECK**—The display for one cycle per 2 horizontal divisions over the center 8 horizontal divisions within 0.08 division.

http://manoman.sqhill.com

f. **ADJUST**—The Gain adjustment, R42 (on the Horizontal Channel Switch and Pickoff Amplifier Board A9), to align the square-wave transition points with the graticule lines.

g. Sequentially press the STOP and CRS2-1 pushbuttons on the front panel keyboard to obtain a cursor display.

h. Position the cursors to the transitions at the second and tenth vertical graticule lines.

i. Set the READOUT intensity control for a visible display of the cursor position information.

j. **CHECK**—The character readout display to be between $\triangle$HCRD = 396 μs and $\triangle$HCRD = 404 μs.

k. **ADJUST**—If necessary, compromise the setting of the Gain adjustment, R42, for optimum curve (display) and numeric (character readout) gain as in parts (e) and (j).

NOTE

The time base units Swp Cal adjustment should be reset according to the procedure given in the Service Manual for the time base in use.

NOTE

If further adjustment of the digitizer system is required, omit the remainder of this step.

l. Turn POWER switch to OFF.

m. Remove the MPU board as per the instructions in the Maintenance section of this manual and re-install the $\overline{\text{IACQ}}$ jumper.

n. Re-install the MPU board.

H12. EXAMINE DIGITIZER 1 MS LINEARITY AND HIGH FREQUENCY TIMING (A9C41, A9R41, A9C65, A9R65)

NOTE

If the preceeding step was not performed, first perform step H1, then proceed.

H12. SETUP CONDITIONS

7854 Controls:
VERTICAL MODE ..... LEFT
HORIZONTAL MODE ..... B

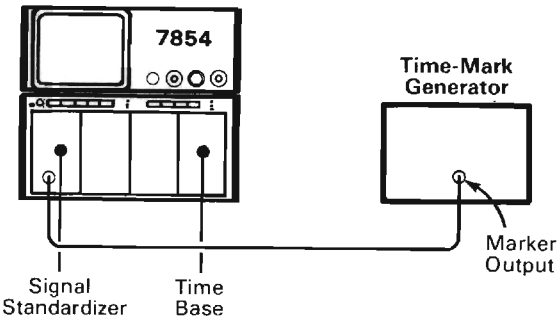

Test Equipment Controls
Time Base
Sweep Rate ..... 1 ms/div
Triggering ..... Auto,Ac,Internal

Signal Standardizer
Test Selector Switch ..... Vert or Horiz Aux In
Rep Rate ..... 10 kHz

Time Mark Generator ..... 1 ms markers

2874-366

a. Press the SCOPE pushbutton on the front panel keyboard to obtain a real time display.

b. Set the Signal Standardizer Amplitude and Position controls for a 2-division marker display centered on the crt.

c. Set the time base Triggering controls for a stable display triggered on the rising edge.

d. Use a screwdriver to set the time base units front-panel Swp Cal adjustment for exactly 1 marker per division over the center 8 divisions.

e. Sequentially press the front-panel STORED and AQR pushbuttons to obtain a continuously digitized marker display.

f. **EXAMINE**—That markers align with the corresponding graticule lines within 0.05 division.

g. Press the STOP pushbuttons on the front-panel keyboard to terminate acquisition.

h. Move the time base to the A HORIZ compartment and set the HORIZONTAL MODE switch to A.

http://manoman.sqhill.com

i. Press the AQR pushbutton on the front-panel to obtain a continuously digitized marker display.

j. Use the time base Position control to align the center time mark with graticule center.

k. **EXAMINE**—That the markers align with the corresponding graticule lines within 0.05 division.

l. **ADJUST**—If the guidelines in part (f) or (k) are not met, steps H6 and H11 must be performed.

m. Press the STOP pushbutton on the front-panel keyboard to terminate acquisition.

n. Move the time base to the B horizontal compartment and set the HORIZONTAL MODE switch to B.

o. Press the AQR pushbutton on the front-panel to obtain a continuously digitized display.

p. Set the time base sweep rate to 5 ns 1 division and the sweep Mag switch to X10.

q. Apply a 2 ns sine wave and set the vertical amplifier deflection for 2 divisions of display.

r. EXAMINE—For 2 cycles over the center 8 divisions of the display within 0.2 division.

s. ADJUST—C41, R41, C65, and R65 for 2 cycles over the center 8 divisions of the display.

NOTE

Selected components A9C44 and A9R44 are factory selected to optimize High Frequency adjustments C41, R41, C64, and R65.

t. Set the time base sweep rate to 10 ns/division and the sweep Mag switch to X10.

u. EXAMINE—For 1 cycle every 2 divisions over the center 8 divisions of the display within 0.16 division.

v. ADJUST—If necessary, compromise the setting of High Frequency adjustments C41, R41, C65, and R65 for optimum 1 ns and 500 ps timing.

w. Press the STOP pushbutton on the front-panel keyboard to terminate acquisition.

x. Move the time base to the A horizontal compartment and set the HORIZONTAL MODE switch to A.

y. Press the AQR pushbutton on the front-panel to obtain a continuously digitized display and perform parts (p) through (v).

NOTE

High Frequency timing adjustments may be compromised to provide optimum timing for A and B horizontals, but the time base must be in the B horizontal compartment to provide access to all four adjustments.

NOTE

If further adjustment of the digitizer system is required, omit the remainder of this step.

z. Turn the POWER switch to OFF.

aa. Remove the MPU board as per instructions in the Maintenance section of this manual and re-install the $\overline{\text{IACO}}$ jumper.

bb. Re-install the MPU board.

H13. CHECK VERTICAL DIGITIZER NUMERIC NOISE

NOTE

If the preceeding step was not performed, first perform step H1, then proceed.

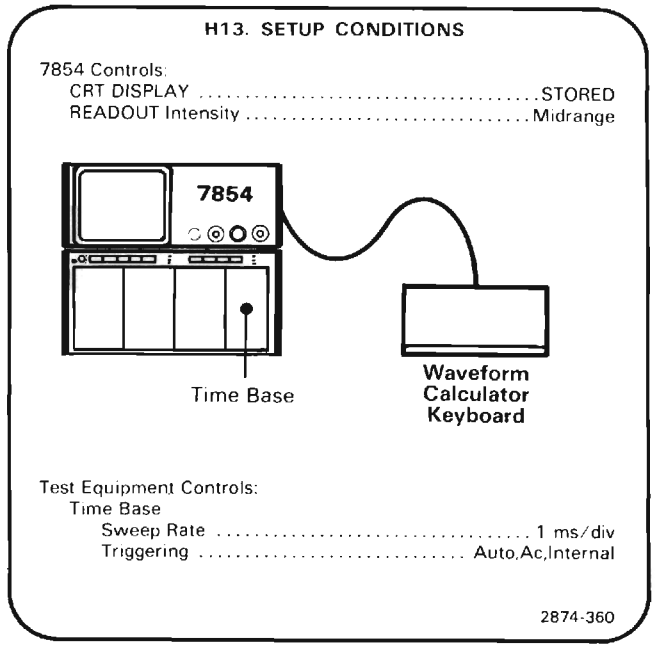

http://manoman.sqhill.com

a. With the 7854 in STORED mode and the READOUT intensity set for an easily visible display, press the PROGRAM ENTRY key on the Waveform Calculator keyboard to obtain a program display with a line pointer at the left side of the crt.

b. Sequentially press the following keys to enter the program required to check numeric noise. Keystrokes that will not appear in the program listing shown on the 7854 crt are enclosed in parentheses ( ). Line numbers are automatically added.

(f), CLS, 2, *(f)*, >CNS, 3, *(f)*, >CNS, (NEXT),

GND, AQR, RMS, (NEXT),

2, CNS, +, 2, *(f)*, >CNS, (NEXT),

3, CNS, 1, +, 3, *(f)*, >CNS, (NEXT),

1, 0, 0, x<>y, IFy>x, 1, GOTO, (NEXT),

2, CNS, 3, CNS, /, (NEXT).

A listing of the program as it will appear on the 7854 crt follows, including the line numbers automatically added. This may be used to check the accuracy of the program as entered.

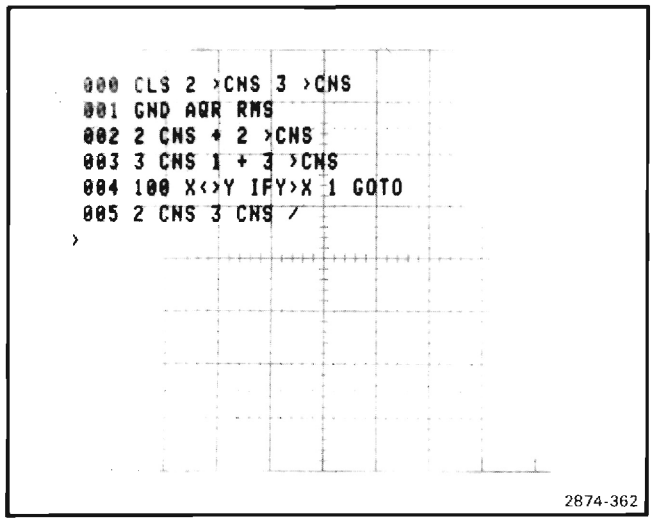

c. After the program has been entered into the 7854 memory, sequentially press the EXECUTE, (f) and START pushbuttons to run the program.

NOTE

As the program is running, audible warnings will be issued if the rear-panel AUDIBLE ERROR/WARNING switch is in the ON position. This is normal.

d. **CHECK**—The character display at the lower edge of the crt to indicate 100 (100 RMS measurements) and less than or equal to 8.000m (the average of these measurements). The remainder of the display line should be ignored.

NOTE

If the instrument under test does not have the Waveform Calculator keyboard (Option 0D), numeric noise may be checked by manually recording the RMS values obtained by sequentally pressing the GND, AQR and RMS keys on the front-panel Measurement keyboard when set up as indicated above (minus the Waveform Calculator keyboard). These measurements are totaled and divided by the number of measurements taken (averaged). Average noise is specified at 100 measurements.

H14. CHECK HORIZONTAL DIGITZER NUMERIC NOISE

NOTE

If the preceeding step was not performed first perform step H1, excluding part a, then proceed with the following instructions. If the preceeding step was performed, begin at step c after setting up the instrument as shown below.

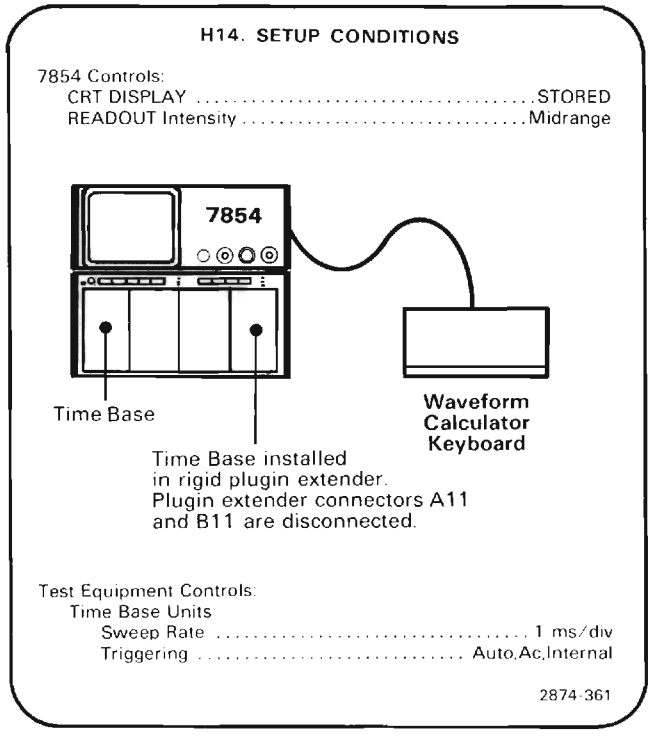

http://manoman.sqhill.com

a. With the 7854 in STORED mode and the READOUT intensity set for an easily visible display, press the PROGRAM ENTRY key on the Waveform Calculator keyboard to obtain a program display with a line pointer at the left side of the crt.

b. Sequentially press the following keys to enter the program required to check numeric noise. Keystrokes that will not appear in the program listing shown on the 7854 crt are enclosed in parentheses ( ). Line numbers are automatically added.

NOTE

The following program is identical to the one in step H13.

(f), CLS, 2, *(f)*, >CNS, 3, *(f)*, >CNS, (NEXT),

GND, AQR, RMS, (NEXT),

2, CNS, +, 2, *(f)*, >CNS, (NEXT),

3, CNS, 1, +, 3, *(f)*, >CNS, (NEXT),

1, 0, 0, x<>y, IFy>x, 1, GOTO, (NEXT),

2, CNS, 3, CNS, /, (NEXT).

A listing of the program as it will appear on the 7854 crt follows, including the line numbers added. This may be used to check the accuracy of the program as entered.

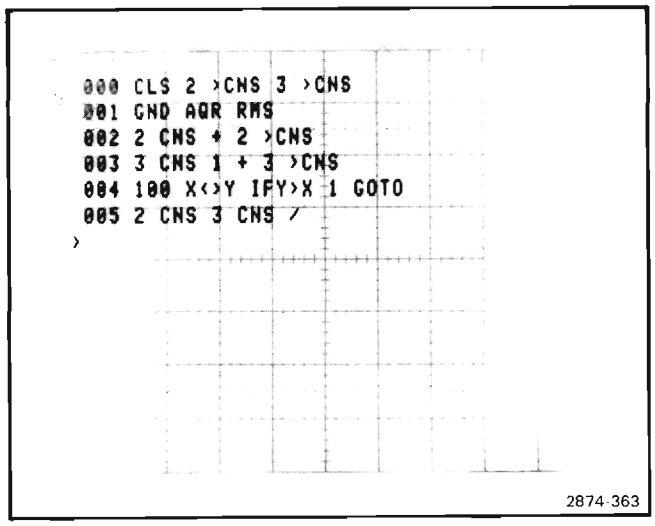

c. With the A11 and B11 bnc connectors on the rigid plug-in extender disconnected, move jumper P630 (on the Digitizer Board A25) to its topmost position to interchange the display axes of the digitized data.

d. Sequentially press the EXECUTE, *(f)* and START pushbuttons on the Waveform Calculator keyboard to run the program.

e. **CHECK**—The character display at the lower edge of the crt to indicate 100 (100 RMS measurements) and less than or equal to 10 μs (the average of these measurements). The remainder of the display line should be ignored.

f. Return jumper P630 to its original position.

NOTE

If the instrument under test does not have the Waveform Calculator keyboard (Option 0D), numeric noise may be checked by manually recording the RMS values obtained by sequentially pressing the GND, AQR and RMS keys on the front-panel Measurement keyboard when setup as indicated above (minus the Waveform Calculator keyboard). These measurements are totaled and divided by the number of measurements taken (averaged). Average noise is specified at 100 measurements.

http://manoman.sqhill.com

I. CALCULATOR KEYBOARD

NOTE

If step GB1, H13 or H14 has been performed, the Calculator keyboard has been implicitly checked and the following procedure need not be performed.

Equipment Required: (Numbers correspond to those listed in Table 4-6, Test Equipment).

No test equipment required.

I1. CALCULATOR KEYBOARD PRELIMINARY SETUP

a. Perform the Adjustment and Performance Check Power-Up Sequence.

b. Refer to Section 5, Instrument Options, and the Change Information at the rear of this manual for any modifications which may affect this procedure.

c. See the **TEST POINT AND ADJUSTMENT LOCATIONS I** foldout in section 7, Diagrams and Circuit Board Illustrations.

d. With the POWER switch OFF, connect the CALCULATOR KEYBOARD to the rear-panel EXTERNAL KEYBOARD connector.

e. Set the 7854 controls as follows:

POWER switch ..... On (pushbutton in)
VERTICAL MODE ..... LEFT
VERT TRACE SEPARATION (B) ..... Midrange
A TRIGGER SOURCE ..... VERT MODE
A INTENSITY ..... Fully counterclockwise
HORIZONTAL MODE ..... B
B INTENSITY ..... Fully counterclockwise
B TRIGGER SOURCE ..... VERT MODE
FOCUS ..... Midrange
READOUT Intensity ..... Midrange
GRAT ILLUM ..... As desired

I2. EXAMINE KEYBOARD ADDRESSING

NOTE

First perform step I1, then proceed.

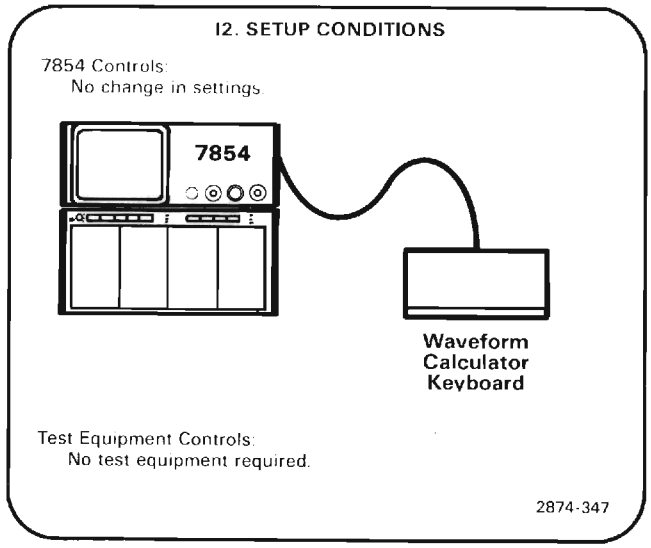

a. Press the PROGRAM ENTRY/EXECUTE key on the WAVEFORM CALCULATOR keyboard to obtain a line pointer displayed on the crt.

b. Sequentially press the ENTER, ABS, MIN, CNS and STOP keys on the WAVEFORM CALCULATOR keyboard.

c. **EXAMINE**—That as each key is pressed, the correct name of the key is displayed on the crt. This verifies that the keyboard is being properly addressed.

http://manoman.sqhill.com

INSTRUMENT OPTIONS

Your 7854 Oscilloscope may be equipped with one or more instrument options. This section includes a brief description of each available option, and an Option Information Locator Table. The Option Information Locator lists all the available options and tells where they are mentioned in this manual. For further information about options, see your Tektronix Products catalog or contact your Tektronix Field Office.

WARNING

To avoid electric shock hazard, operating personnel must not remove the protective instrument covers. Component replacement and internal adjustments must be made by qualified service personnel only.

OPTION 02

Option 02 is an X-Y delay-compensation network to equalize signal delay between the vertical and horizontal deflection systems. With this network installed and activated, the phase shift between the vertical and horizontal channels is adjustable to less than 2° from dc to 1 MHz.

OPTION 03

Option 03 includes parts that enable the instrument to meet the electromagnetic compatibility listed in Section 2 of the Operators Manual.

OPTION 78

Option 78 subtitutes a P11 phosphor crt for the standard P31 phosphor crt.

OPTION 0D

Option 0D deletes the GPIB, the Waveform Calculator, and 2K of RAM from the instrument. Operation of the instrument is not changed, except for:

1. GPIB/IEEE-488-1978 facilities are not available. RQS, keyboard command is made inoperative and the I/O, SRQ, and REMOTE ONLY status indicators are no longer operative. The GPIB BINARY ADDRESS SELECTION switch and the 24 pin GPIB connectors are replaced with a blank plate.

2. Access to Waveform Calculator commands is denied.

NOTE

The GPIB facilities cannot be used without the Waveform Calculator.

OPTION 2D

Option 2D adds an additional 4096 words of memory to expand program, constant, and waveform storage capabilities. Program storage is increased to 1000 program lines. Constant storage is increased to 100 constants. Waveform storage is increased to 5120 waveform data points. Otherwise, operation of the instrument is not changed.

OPTION 1S

Option 1S makes the currently applicable version of Diagnostic Memory Card, 067-0961-xx, available at the time of instrument purchase.

The 067-0961-xx is a component of the digital service package and is not required for instrument operation.

OPTION 2S

Option 2S makes the currently applicable version of Signature Tables, 070-2972-xx, available at the time of instrument purchase.

http://manoman.sqhill.com

The 070-2972-xx is required for signature analysis troubleshooting and is not required for instrument operation and/or understanding instrument operation.

POWER CORD OPTIONS

The following options can replace the standard power cord. This allows customers outside North America to obtain instrument with power plugs compatible with their locales. 161-0066-00 is the 115 V North American standard.

Option Number	Description	Part Number
A1	Universal European, 220 V	161-0066-09
A2	UK, 240 V	161-0066-10
A3	Australian, 240 V	161-0066-11
A4	North American, 240 V	161-0066-12

TABLE 5-1
Option Information Locator

Option	Location In Manual		Information
	Section	Heading	
Option 02	2 Theory of Operation	X-Y Delay Compensation (Option 02)	Provides a discussion of circuitry.
	4 Calibration	Check X-Y Compensation (Option 02 Only)	Checkout procedure.
		Check/Adjust X-Y Compensation (Option 02 Only)	Checkout and adjustment procedure.
	5 Instrument Options	Option 02	Includes brief description of Option 02.
	6 Replaceable Electrical Parts	A33 CKT BOARD ASSY; X-Y	List of electrical components unique to Option 02.
	7 Diagrams and Circuit Board Illustrations	Diagram 10	Shows circuitry unique to Option 02.
		7854 Circuit Board Locations	Shows location of A33 (Option 02) circuit board.
		Assemblies A9, A10 & A33 (pullout)	Shows location of Compensation Board (A33).

http://manoman.sghill.com

TABLE 5-1 (CONT)
Option Information Locator

Option	Location In Manual		Information
	Section	Heading	
Option 03	5 Instrument Options	Option 03	Includes a brief description of Option 03.
	8 Replaceable Mechanical Parts	Option 03 (pullout page)	Provides a mechanical parts list and an exploded-view drawing of Option 03.
Option 78	5 Instrument Options	Option 78	Includes a brief description of Option 78.
Option 0D	4 Calibration	GA. Display Systems	Note directing calibrators of Option 03 instruments to Display System procedure GC.
		GC. Display System	Display System calibration procedure for Option 0D instruments.
	5 Instrument Options	Option 0D	Includes a brief description of Option 0D.
	7 Diagrams and Circuit Board Illustrations	Diagrams 19 and 35	All circuitry shown is deleted for Option 0D
		Diagrams 30 and 32	Partial delection of circuity for Option 0D.
Option 2D	5 Instrument Options	Option 2D	Includes brief description of Option 2D.
	6 Replaceable Electrical Parts	Ckt Board Assembly: RAM	Components unique to Option 2D are noted.
	7 Diagrams and Circuit Board Illustrations.	Diagram 30	Shows circuitry added for Option 2D.

http://manoman.sqhill.com

TABLE 5-1 (CONT)
Option Information Locator

Option	Location In Manual		Information
	Section	Heading	
Option 1S	2 Theory of Operation	Signature Analysis	Mentions that the Diagnostic Memory card is used when taking signatures.
	3 Maintenance	Service Identification Tag	Means of identifying the diagnostic firmware required.
		Digital Troubleshooting Equipment	Brief description of Option 1S.
	5 Instrument Options	Option 1S	Includes brief description of Option 1S.
Option 2S	2 Theory of Operation	Signature Analysis	Mentions that signature tables are required for signature analysis.
	3 Maintenance	Service Identification Tag	Means of identifying the required signature tables.
		Digital Troubleshooting Equipment	Brief description of Option 2S.
	5 Instrument Options	Option 2S	Includes brief description of Option 2S.
Options: A1 A2 A3 A4	5 Instrument Options	Power Cord Options	Includes brief description of Options A1, A2, A3, and A4.

http://manoman.sqhill.com

WHICH OPTIONS DOES YOUR 7854 HAVE?

Instruments with one or more Options (02, 03, 78, 0D, 2D, A1, A2, A3, A4) will have a tag to identify each Option. The tag(s) will be attached to the rear of the 7854 (see Fig. 5-1). Instruments with Options 1S or 2S will have no identification tags since those Options are not part of the 7854.

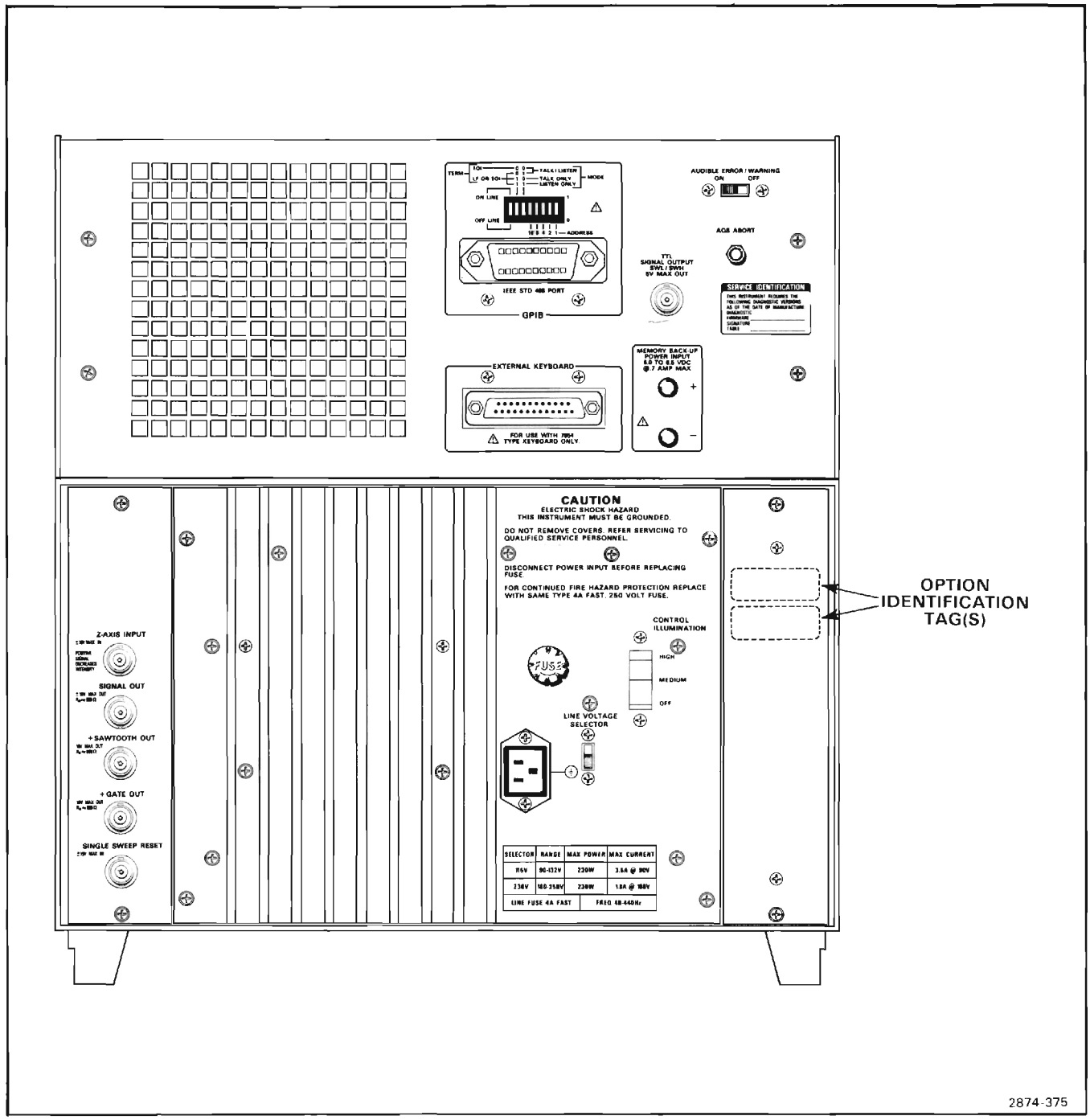

Figure 5-1. Location of Option identification tags.

http://manoman.sqhill.com

REPLACEABLE ELECTRICAL PARTS

PARTS ORDERING INFORMATION

Replacement parts are available from or through your local Tektronix, Inc. Field Office or representative.

Changes to Tektronix instruments are sometimes made to accommodate improved components as they become available, and to give you the benefit of the latest circuit improvements developed in our engineering department. It is therefore important, when ordering parts, to include the following information in your order: Part number, instrument type or number, serial number, and modification number if applicable.

If a part you have ordered has been replaced with a new or improved part, your local Tektronix, Inc. Field Office or representative will contact you concerning any change in part number.

Change information, if any, is located at the rear of this manual.

LIST OF ASSEMBLIES

A list of assemblies can be found at the beginning of the Electrical Parts List. The assemblies are listed in numerical order. When the complete component number of a part is known, this list will identify the assembly in which the part is located.

CROSS INDEX-MFR. CODE NUMBER TO MANUFACTURER

The Mfr. Code Number to Manufacturer index for the Electrical Parts List is located immediately after this page. The Cross Index provides codes, names and addresses of manufacturers of components listed in the Electrical Parts List.

ABBREVIATIONS

Abbreviations conform to American National Standard Y1.1.

COMPONENT NUMBER (column one of the Electrical Parts List)

A numbering method has been used to identify assemblies, subassemblies and parts. Examples of this numbering method and typical expansions are illustrated by the following:

Example a.

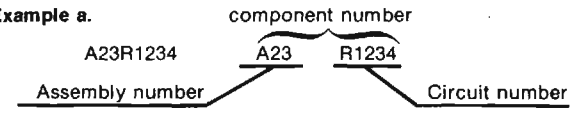

Read: Resistor 1234 of Assembly 23

Example b.

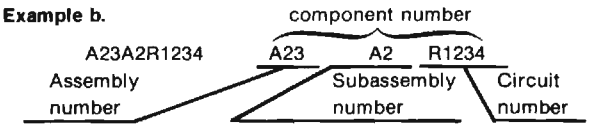

Read: Resistor 1234 of Subassembly 2 of Assembly 23

Only the circuit number will appear on the diagrams and circuit board illustrations. Each diagram and circuit board illustration is clearly marked with the assembly number. Assembly numbers are also marked on the mechanical exploded views located in the Mechanical Parts List. The component number is obtained by adding the assembly number prefix to the circuit number.

The Electrical Parts List is divided and arranged by assemblies in numerical sequence (e.g., assembly A1 with its subassemblies and parts, precedes assembly A2 with its subassemblies and parts).

Chassis-mounted parts have no assembly number prefix and are located at the end of the Electrical Parts List.

TEKTRONIX PART NO. (column two of the Electrical Parts List)

Indicates part number to be used when ordering replacement part from Tektronix.

SERIAL/MODEL NO. (columns three and four of the Electrical Parts List)

Column three (3) indicates the serial number at which the part was first used. Column four (4) indicates the serial number at which the part was removed. No serial number entered indicates part is good for all serial numbers.

NAME & DESCRIPTION (column five of the Electrical Parts List)

In the Parts List, an Item Name is separated from the description by a colon (:). Because of space limitations, an Item Name may sometimes appear as incomplete. For further Item Name identification, the U.S. Federal Cataloging Handbook H6-1 can be utilized where possible.

MFR. CODE (column six of the Electrical Parts List)

Indicates the code number of the actual manufacturer of the part. (Code to name and address cross reference can be found immediately after this page.)

MFR. PART NUMBER (column seven of the Electrical Parts List)

Indicates actual manufacturers part number.

http://manoman.sghill.com

CROSS INDEX—MFR. CODE NUMBER TO MANUFACTURER

Mfr. Code	Manufacturer	Address	City, State, Zip
0000L	MATSUSHITA ELECTRIC	200 PARK AVENUE, 54TH FLOOR	NEW YORK, NY 10017
0000W	UNITED CHEMICON, INC.	731 JAMES STREET	SYRACUSE, NY 13203
00779	AMP, INC.	P O BOX 3608	HARRISBURG, PA 17105
00853	SANGAMO ELECTRIC CO., S. CAROLINA DIV.	P O BOX 128	PICKENS, SC 29671
01002	GENERAL ELECTRIC COMPANY, INDUSTRIAL AND POWER CAPACITOR PRODUCTS DEPARTMENT	JOHN STREET	HUDSON FALLS, NY 12839
01121	ALLEN-BRADLEY COMPANY	1201 2ND STREET SOUTH	MILWAUKEE, WI 53204
01295	TEXAS INSTRUMENTS, INC., SEMICONDUCTOR GROUP	P O BOX 5012, 13500 N CENTRAL EXPRESSWAY	DALLAS, TX 75222
01961	PULSE ENGINEERING, INC.	7250 CONVOY COURT	SAN DIEGO, CA 92111
02111	SPECTROL ELECTRONICS CORPORATION	17070 EAST GALE AVENUE	CITY OF INDUSTRY, CA 91745
02735	RCA CORPORATION, SOLID STATE DIVISION	ROUTE 202	SOMERVILLE, NY 08876
02777	HOPKINS ENGINEERING COMPANY	12900 FOOTHILL BLVD.	SAN FERNANDO, CA 91342
03508	GENERAL ELECTRIC COMPANY, SEMI-CONDUCTOR PRODUCTS DEPARTMENT	ELECTRONICS PARK	SYRACUSE, NY 13201
03888	KDI PYROFILM CORPORATION	60 S JEFFERSON ROAD	WHIPPANY, NJ 07981
04222	AVX CERAMICS, DIVISION OF AVX CORP.	P O BOX 867, 19TH AVE. SOUTH	MYRTLE BEACH, SC 29577
04713	MOTOROLA, INC., SEMICONDUCTOR PROD. DIV.	5005 E MCDOWELL RD,PO BOX 20923	PHOENIX, AZ 85036
05347	ULTRONIX, INC.	461 N 22ND STREET	GRAND JUNCTION, CO 81501
07263	FAIRCHILD SEMICONDUCTOR, A DIV. OF FAIRCHILD CAMERA AND INSTRUMENT CORP.	464 ELLIS STREET	MOUNTAIN VIEW, CA 94042
07716	TRW ELECTRONIC COMPONENTS, IRC FIXED RESISTORS, BURLINGTON DIV.	2850 MT. PLEASANT	BURLINGTON, IA 52601
08806	GENERAL ELECTRIC CO., MINIATURE LAMP PRODUCTS DEPARTMENT	NELA PARK	CLEVELAND, OH 44112
09023	CORNELL-DUBILIER ELECTRONIC DIVISION FEDERAL PACIFIC ELECTRIC CO.	2652 DALRYMPLE ST.	SANFORD, NC 27330
12954	SIEMENS CORPORATION, COMPONENTS GROUP	8700 E THOMAS RD, P O BOX 1390	SCOTTSDALE, AZ 85252
12969	UNITRODE CORPORATION	580 PLEASANT STREET	WATERTOWN, MA 02172
14193	CAL-R, INC.	1601 OLYMPIC BLVD.	SANTA MONICA, CA 90404
14298	AMERICAN COMPONENTS, INC., AN INSILCO COMPANY	8TH AVE. AT HARRY STREET	CONSHOHOCKEN, PA 19428
14433	ITT SEMICONDUCTORS	3301 ELECTRONICS WAY P O BOX 3049	WEST PALM BEACH, FL 33402
14552	MICRO SEMICONDUCTOR CORP.	2830 E FAIRVIEW ST.	SANTA ANA, CA 92704
14936	GENERAL INSTRUMENT CORP., SEMICONDUCTOR PRODUCTS GROUP	P.O. BOX 600,600 W. JOHN ST.	HICKSVILLE, NY 11802
15454	RODAN INDUSTRIES, INC.	2905 BLUE STAR ST.	ANAHEIM, CA 92806
16299	CORNING GLASS WORKS, ELECTRONIC COMPONENTS DIVISION	3900 ELECTRONICS DR.	RALEIGH, NC 27604
18324	SIGNETICS CORP.	811 E. ARQUES	SUNNYVALE, CA 94086
22229	SOLITRON DEVICES, INC., SEMICONDUCTOR GROUP	8808 BALBOA AVENUE	SAN DIEGO OPERS, CA 92123
24546	CORNING GLASS WORKS, ELECTRONIC COMPONENTS DIVISION	550 HIGH STREET	BRADFORD, PA 16701
25088	SIEMENS CORP.	186 WOOD AVE. S	ISELIN, NJ 08830
26805	OMNI SPECTRA INC., MICROWAVE CONNECTOR DIV.	140 FOURTH AVE	WALTHAM, MA 02154
27014	NATIONAL SEMICONDUCTOR CORP.	2900 SEMICONDUCTOR DR.	SANTA CLARA, CA 95051
32997	BOURNS, INC., TRIMPOT PRODUCTS DIV.	1200 COLUMBIA AVE.	RIVERSIDE, CA 92507
34335	ADVANCED MICRO DEVICES	901 THOMPSON PL.	SUNNYVALE, CA 94086
50157	MIDWEST COMPONENTS INC.	P. O. BOX 787 1981 PORT CITY BLVD.	MUSKEGON, MI 49443
50434	HEWLETT-PACKARD COMPANY	640 PAGE MILL ROAD	PALO ALTO, CA 94304
50558	ELECTRONIC CONCEPTS, INC.	526 INDUSTRIAL WAY WEST	EATONTOWN, NJ 07724
51642	CENTRE ENGINEERING INC.	2820 E COLLEGE AVENUE	STATE COLLEGE, PA 16801
52306	HIGH VOLTAGE DEVICES, INC.	7485 AVENUE 304	VISALIA, CA 93277
52769	SPRAGUE GOODMAN ELEC., INC.	134 FULTON AVENUE	GARDEN CITY PARK, NY 11040
52961	PRODUCTS SERVICES CO.	86365 COLLEGE VIEW RD.	EUGENE, OR 97405
53944	ELT INC., GLOW LITE DIVISION	BOX 698	PAULS VALLEY, OK 73075
54473	MATSUSHITA ELECTRIC, CORP. OF AMERICA	1 PANASONIC WAY	SECAUCUS, NJ 07094
55210	GETTIG ENG. AND MFG. COMPANY	PO BOX 85, OFF ROUTE 45	SPRING MILLS, PA 16875
55680	NICHICON/AMERICA/CORP.	6435 N PROESEL AVENUE	CHICAGO, IL 60645
56289	SPRAGUE ELECTRIC CO.	87 MARSHALL ST.	NORTH ADAMS, MA 01247
59660	TUSONIX INC.	2155 N FORBES BLVD	TUCSON, AZ 85705
71279	CAMBRIDGE THERMIONIC CORP.	445 CONCORD AVE.	CAMBRIDGE, MA 02138

http://manoman.sqhill.com

CROSS INDEX—MFR. CODE NUMBER TO MANUFACTURER

Mfr. Code	Manufacturer	Address	City, State, Zip
71400	BUSSMAN MFG., DIVISION OF MCGRAW-EDISON CO.	2536 W. UNIVERSITY ST.	ST. LOUIS, MO 63107
72982	ERIE TECHNOLOGICAL PRODUCTS, INC.	644 W. 12TH ST.	ERIE, PA 16512
73138	BECKMAN INSTRUMENTS, INC., HELIPOT DIV.	2500 HARBOR BLVD.	FULLERTON, CA 92634
73803	TEXAS INSTRUMENTS, INC., METALLURGICAL MATERIALS DIV.	34 FOREST STREET	ATTLEBORO, MA 02703
73899	JFD ELECTRONICS COMPONENTS CORP.	PINETREE ROAD	OXFORD, NC 27565
74970	JOHNSON, E. F., CO.	299 10TH AVE. S. W.	WASECA, MN 56093
75042	TRW ELECTRONIC COMPONENTS, IRC FIXED RESISTORS, PHILADELPHIA DIVISION	401 N. BROAD ST.	PHILADELPHIA, PA 19108
76493	BELL INDUSTRIES, INC., MILLER, J. W., DIV.	19070 REYES AVE., P O BOX 5825	COMPTON, CA 90224
76854	OAK INDUSTRIES, INC., SWITCH DIV.	S. MAIN ST.	CRYSTAL LAKE, IL 60014
77342	AMF INC., POTTER AND BRUMFIELD DIV.	200 RICHLAND CREEK DRIVE	PRINCETON, IN 47670
78488	STACKPOLE CARBON CO.		ST. MARYS, PA 15857
79727	C-W INDUSTRIES	550 DAVISVILLE RD.,P O BOX 96	WARMINISTER, PA 18974
80009	TEKTRONIX, INC.	P O BOX 500	BEAVERTON, OR 97077
80031	ELECTRA-MIDLAND CORP., MEPCO DIV.	22 COLUMBIA ROAD	MORRISTOWN, NJ 07960
81073	GRAYHILL, INC.	561 HILLGROVE AVE., PO BOX 373	LA GRANGE, IL 60525
82389	SWITCHCRAFT, INC.	5555 N. ELSTON AVE.	CHICAGO, IL 60630
83003	VARO, INC.	P O BOX 411, 2203 WALNUT STREET	GARLAND, TX 75040
84411	TRW ELECTRONIC COMPONENTS, TRW CAPACITORS	112 W. FIRST ST.	OGALLALA, NE 69153
88407	BULOVA WATCH CO. INC. ELECTRONICS DIV.	61-20 WOODSIDE AVE	WOODSIDE, NY 11377
90201	MALLORY CAPACITOR CO., DIV. OF P. R. MALLORY AND CO., INC.	3029 E. WASHINGTON STREET P. O. BOX 372	INDIANAPOLIS, IN 46206
91418	RADIO MATERIALS COMPANY, DIV. OF P.R. MALLORY AND COMPANY, INC.	4242 W BRYN MAWR	CHICAGO, IL 60646
91637	DALE ELECTRONICS, INC.	P. O. BOX 609	COLUMBUS, NE 68601
95275	VITRAMON, INC.	P O BOX 544	BRIDGEPORT, CT 06601

http://manoman.sqhill.com

Component No.	Tektronix Part No.	Serial/Model No. Eff	Dscont	Name & Description	Mfr Code	Mfr Part Number
A1	670-0702-03			CKT BOARD ASSY:GRATICULE LAMPS	80009	670-0702-03
	----- -----			(NO ELECTRICAL PARTS)		
A2	670-5840-00	B010100	B010194	CKT BOARD ASSY:MODE SWITCH	80009	670-5840-00
A2	670-5840-01	B010195		CKT BOARD ASSY:MODE SWITCH	80009	670-5840-01
A3	670-5854-00			CKT BOARD ASSY:FRONT PANEL	80009	670-5854-00
A4	670-5853-00			CKT BOARD ASSY:FRONT PANEL BUTTON	80009	670-5853-00
A5	670-5842-00	B010100	B030859	CKT BOARD ASSY:INTENSITY CONTROL	80009	670-5842-00
A5	670-5842-01	B030860		CKT BOARD ASSY:INTENSITY CONTROL	80009	670-5842-01
A6	670-5843-00	B010100	B030859	CKT BOARD ASSY:POT ADJUST	80009	670-5843-00
A6	670-5843-01	B030860		CKT BOARD ASSY:POT ADJUST	80009	670-5843-01
A7	670-5852-00	B010100	B010599	CKT BOARD ASSY:AUX REGULATOR	80009	670-5852-00
A7	670-5852-01	B010600		CKT BOARD ASSY:AUX REGULATOR	80009	670-5852-01
A8	670-5844-00	B010100	B020175	CKT BOARD ASSY:MOTHER	80009	670-5844-00
A8	670-5844-01	B020176		CKT BOARD ASSY:MOTHER	80009	670-5844-01
	----- -----			(NO ELECTRICAL PARTS)		
A9	670-5839-00			CKT BOARD ASSY:HORIZ CHANNEL SW	80009	670-5839-00
A10	670-3960-00			CKT BOARD ASSY:HORIZ INTERCONNECT	80009	670-3960-00
	----- -----			(NO ELECTRICAL PARTS)		
A11	670-5836-00	B010100	B010189	CKT BOARD ASSY:MAIN INTERFACE	80009	670-5836-00
A11	670-5836-01	B010190		CKT BOARD ASSY:MAIN INTERFACE	80009	670-5836-01
A12	670-5959-00	B010100	B010115	CKT BOARD ASSY:CONTROL RECT	80009	670-5959-00
A12	670-5959-01	B010116		CKT BOARD ASSY:CONTROL RECT	80009	670-5959-01
A13	670-3957-02			CKT BOARD ASSY:TRIGGER SELECT	80009	670-3957-02
A14	670-5837-00	B010100	B010184	CKT BOARD ASSY:LOGIC	80009	670-5837-00
A14	670-5837-01	B010185		CKT BOARD ASSY:LOGIC	80009	670-5837-01
A15	670-5835-00			CKT BOARD ASSY:SIGNAL OUTPUT	80009	670-5835-00
A16	670-4641-00			CKT BOARD ASSY:FAN	80009	670-4641-00
A17	670-5833-00			CKT BOARD ASSY:HORIZONTAL OUTPUT	80009	670-5833-00
A18	670-5832-00	B010100	B030919	CKT BOARD ASSY:VERTICAL OUTPUT	80009	670-5832-00
A18	670-5832-01	B030920		CKT BOARD ASSY:VERTICAL OUTPUT	80009	670-5832-01
A19	670-5838-00	B010100	B030899	CKT BOARD ASSY:VERTICAL CHANNEL SW	80009	670-5838-00
A19	670-5838-01	B030900		CKT BOARD ASSY:VERTICAL CHANNEL SW	80009	670-5838-01
A20	670-5841-00	B010100	B010180	CKT BOARD ASSY:HIGH VOLTAGE	80009	670-5841-00
A20	670-5841-01	B010181	B010419	CKT BOARD ASSY:HIGH VOLTAGE	80009	670-5841-01
A20	670-5841-02	B010420		CKT BOARD ASSY:HIGH VOLTAGE	80009	670-5841-02
A21	670-5834-00			CKT BOARD ASSY:Z-AXIS	80009	670-5834-00
A22	670-5960-00	B010100	B010115	CKT BOARD ASSY:LV REGULATOR	80009	670-5960-00
A22	670-5960-01	B010116		CKT BOARD ASSY:LV REGULATOR	80009	670-5960-01
A23	670-6259-00			CKT BOARD ASSY:P.S. INVERTER	80009	670-6259-00
A24	119-1048-00			DELAY LINE,ELEC:65NS,50 OHMS	80009	119-1048-00
	----- -----			(NO ELECTRICAL PARTS)		
A25	670-5850-00			CKT BOARD ASSY:DIGITIZER	80009	670-5850-00
A26	670-5846-00			CKT BOARD ASSY:CONTROL LOGIC	80009	670-5846-00
A27	670-5845-00	B010100	B010299	CKT BOARD ASSY:M.P.U.	80009	670-5845-00
A27	670-5845-01	B010300		CKT BOARD ASSY:M.P.U.	80009	670-5845-01
A28	670-5848-00			CKT BOARD ASSY:RAM	80009	670-5848-00
A28	670-5848-02	B010100	B010380	CKT BOARD ASSY:4K EXPANDED RAM	80009	670-5848-02
	----- -----			(OPTION 2D ONLY)		
A28	670-5848-06	B010381		CKT BOARD ASSY:4K EXPANDED RAM	80009	670-5848-06
	----- -----			(OPTION 2D ONLY)		
A29	670-5851-00			CKT BOARD ASSY:DISPLAY	80009	670-5851-00
A30	670-5849-00			CKT BOARD ASSY:G.P.I.B.	80009	670-5849-00
A31	670-5847-00			CKT BOARD ASSY:ROM	80009	670-5847-00
A32	670-5855-00			CKT BOARD ASSY:REAR PANEL CONNECTOR	80009	670-5855-00
A33	670-3959-00	B010100	B020670	CKT BOARD ASSY:X-Y COMPENSATION	80009	670-3959-00
	----- -----			(OPTION 02 ONLY)		
A33	670-3959-01	B020671		CKT BOARD ASSY:X-Y COMPENSATION	80009	670-3959-01
	----- -----			(OPTION 02 ONLY)		
A34	670-5860-00			CKT BOARD ASSY:DISPLAY FOLLOWER	80009	670-5860-00
	----- -----			(NO ELECTRICAL PARTS)		

http://manoman.sghill.com

Component No.	Tektronix Part No.	Serial/Model No. Eff	Dscont	Name & Description	Mfr Code	Mfr Part Number
A35	670-5860-00			CKT BOARD ASSY:DISPLAY FOLLOWER	80009	670-5860-00
	----- -----			(NO ELECTRICAL PARTS)		
A36	670-5795-00			CKT BOARD ASSY:ELECTRONICS	80009	670-5795-00
A37	670-5796-00			CKT BOARD ASSY:BUTTON	80009	670-5796-00
A1	----- -----			CKT BOARD ASSY:GRATICULE LAMPS		
A1DS42	150-0029-00			LAMP,INCAND:6.3V,0.20A	08806	349
A1DS43	150-0029-00			LAMP,INCAND:6.3V,0.20A	08806	349
A1DS44	150-0029-00			LAMP,INCAND:6.3V,0.20A	08806	349
A2	----- -----			CKT BOARD ASSY:MODE SWITCH		
A2C1	283-0111-00			CAP.,FXD,CER DI:0.1UF,20%,50V	72982	8121-N088Z5U104M
A2C15	283-0111-00			CAP.,FXD,CER DI:0.1UF,20%,50V	72982	8121-N088Z5U104M
A2C16	285-1006-00			CAP.,FXD,PLSTC:0.22UF,2%,50V	80009	285-1006-00
A2C22	283-0115-00			CAP.,FXD,CER DI:47PF,5%,200V	59660	805-519-COF0470J
A2C27	283-0115-00			CAP.,FXD,CER DI:47PF,5%,200V	59660	805-519-COF0470J
A2C61	283-0111-00			CAP.,FXD,CER DI:0.1UF,20%,50V	72982	8121-N088Z5U104M
A2C62	283-0111-00			CAP.,FXD,CER DI:0.1UF,20%,50V	72982	8121-N088Z5U104M
A2C70	283-0111-00			CAP.,FXD,CER DI:0.1UF,20%,50V	72982	8121-N088Z5U104M
A2C72	283-0111-00			CAP.,FXD,CER DI:0.1UF,20%,50V	72982	8121-N088Z5U104M
A2CR26	152-0141-02			SEMICOND DEVICE:SILICON,30V,150MA	01295	1N4152R
A2CR58	152-0141-02			SEMICOND DEVICE:SILICON,30V,150MA	01295	1N4152R
A2CR89	152-0066-03			SEMICOND DEVICE:RECT,SI,400V,1A	80009	152-0066-03
A2CR90	152-0066-03			SEMICOND DEVICE:RECT,SI,400V,1A	80009	152-0066-03
A2CR91	152-0141-02			SEMICOND DEVICE:SILICON,30V,150MA	01295	1N4152R
A2CR92	152-0141-02			SEMICOND DEVICE:SILICON,30V,150MA	01295	1N4152R
A2CR93	152-0141-02			SEMICOND DEVICE:SILICON,30V,150MA	01295	1N4152R
A2CR94	152-0141-02			SEMICOND DEVICE:SILICON,30V,150MA	01295	1N4152R
A2CR95	152-0141-02			SEMICOND DEVICE:SILICON,30V,150MA	01295	1N4152R
A2CR96	152-0141-02			SEMICOND DEVICE:SILICON,30V,150MA	01295	1N4152R
A2CR97	152-0141-02			SEMICOND DEVICE:SILICON,30V,150MA	01295	1N4152R
A2CR98	152-0141-02			SEMICOND DEVICE:SILICON,30V,150MA	01295	1N4152R
A2CR99	152-0141-02			SEMICOND DEVICE:SILICON,30V,150MA	01295	1N4152R
A2CR100	152-0141-02			SEMICOND DEVICE:SILICON,30V,150MA	01295	1N4152R
A2CR101	152-0141-02			SEMICOND DEVICE:SILICON,30V,150MA	01295	1N4152R
A2CR102	152-0141-02			SEMICOND DEVICE:SILICON,30V,150MA	01295	1N4152R
A2CR103	152-0141-02			SEMICOND DEVICE:SILICON,30V,150MA	01295	1N4152R
A2CR104	152-0141-02			SEMICOND DEVICE:SILICON,30V,150MA	01295	1N4152R
A2CR105	152-0141-02			SEMICOND DEVICE:SILICON,30V,150MA	01295	1N4152R
A2CR106	152-0075-00			SEMICOND DEVICE:GE,25V,40MA	14433	G866
A2CR107	152-0075-00			SEMICOND DEVICE:GE,25V,40MA	14433	G866
A2CR108	152-0075-00			SEMICOND DEVICE:GE,25V,40MA	14433	G866
A2CR109	152-0075-00			SEMICOND DEVICE:GE,25V,40MA	14433	G866
A2CR117	152-0075-00			SEMICOND DEVICE:GE,25V,40MA	14433	G866
A2CR118	152-0075-00			SEMICOND DEVICE:GE,25V,40MA	14433	G866
A2CR121	152-0242-00			SEMICOND DEVICE:SILICON,225V,200MA	07263	FDH5004
A2DS101	150-0057-01			LAMP,INCAND:5V,0.115A,WIRE LD,SEL	76854	17AS15
A2DS102	150-0057-01			LAMP,INCAND:5V,0.115A,WIRE LD,SEL	76854	17AS15
A2DS103	150-0057-01			LAMP,INCAND:5V,0.115A,WIRE LD,SEL	76854	17AS15
A2DS104	150-0057-01			LAMP,INCAND:5V,0.115A,WIRE LD,SEL	76854	17AS15
A2DS105	150-0057-01			LAMP,INCAND:5V,0.115A,WIRE LD,SEL	76854	17AS15
A2DS106	150-0057-01			LAMP,INCAND:5V,0.115A,WIRE LD,SEL	76854	17AS15
A2DS107	150-0057-01			LAMP,INCAND:5V,0.115A,WIRE LD,SEL	76854	17AS15
A2DS108	150-0057-01			LAMP,INCAND:5V,0.115A,WIRE LD,SEL	76854	17AS15
A2DS109	150-0057-01			LAMP,INCAND:5V,0.115A,WIRE LD,SEL	76854	17AS15
A2L31	108-0440-00			COIL,RF:8UH,TOROIDAL INDUCTOR	80009	108-0440-00
A2Q15	151-0192-03			TRANSISTOR:SILICON,NPN	80009	151-0192-03
A2Q17	151-0192-03			TRANSISTOR:SILICON,NPN	80009	151-0192-03

http://manoman.sqhill.com

Component No.	Tektronix Part No.	Serial/Model No. Eff	Dscont	Name & Description	Mfr Code	Mfr Part Number
A2Q91	151-0190-05			TRANSISTOR:SILICON,NPN	80009	151-0190-05
A2Q92	151-0190-05			TRANSISTOR:SILICON,NPN	80009	151-0190-05
A2Q93	151-0190-05			TRANSISTOR:SILICON,NPN	80009	151-0190-05
A2Q94	151-0190-05			TRANSISTOR:SILICON,NPN	80009	151-0190-05
A2Q95	151-0190-05			TRANSISTOR:SILICON,NPN	80009	151-0190-05
A2Q96	151-0190-05			TRANSISTOR:SILICON,NPN	80009	151-0190-05
A2Q97	151-0190-05			TRANSISTOR:SILICON,NPN	80009	151-0190-05
A2Q98	151-0190-05			TRANSISTOR:SILICON,NPN	80009	151-0190-05
A2Q99	151-0190-05			TRANSISTOR:SILICON,NPN	80009	151-0190-05
A2Q114	151-0190-05			TRANSISTOR:SILICON,NPN	80009	151-0190-05
A2Q120	151-0190-05			TRANSISTOR:SILICON,NPN	80009	151-0190-05
A2Q121	151-0190-05			TRANSISTOR:SILICON,NPN	80009	151-0190-05
A2R1	315-0472-00			RES.,FXD,CMPSN:4.7K OHM,5%,0.25W	01121	CB4725
A2R2	315-0472-00			RES.,FXD,CMPSN:4.7K OHM,5%,0.25W	01121	CB4725
A2R3	315-0472-00			RES.,FXD,CMPSN:4.7K OHM,5%,0.25W	01121	CB4725
A2R4	315-0472-00			RES.,FXD,CMPSN:4.7K OHM,5%,0.25W	01121	CB4725
A2R5	315-0472-00			RES.,FXD,CMPSN:4.7K OHM,5%,0.25W	01121	CB4725
A2R6	315-0472-00			RES.,FXD,CMPSN:4.7K OHM,5%,0.25W	01121	CB4725
A2R7	315-0472-00			RES.,FXD,CMPSN:4.7K OHM,5%,0.25W	01121	CB4725
A2R8	315-0472-00			RES.,FXD,CMPSN:4.7K OHM,5%,0.25W	01121	CB4725
A2R9	315-0472-00			RES.,FXD,CMPSN:4.7K OHM,5%,0.25W	01121	CB4725
A2R12	321-0258-00			RES.,FXD,FILM:4.75K OHM,1%,0.125W	91637	MFF1816G47500F
A2R13	315-0823-00			RES.,FXD,CMPSN:82K OHM,5%,0.25W	01121	CB8235
A2R14	321-0822-06			RES.,FXD,FILM:1.76K OHM,0.25%,0.125W	91637	MFF1816C17600C
A2R15	311-1223-00			RES.,VAR,NONWIR:TRMR,250 OHM,0.5W	02111	63M251T602
A2R16	321-0321-07			RES.,FXD,FILM:21.5K OHM,0.1%,0.125W	91637	MFF1816C21501B
A2R17	315-0362-00			RES.,FXD,CMPSN:3.6K OHM,5%,0.25W	01121	CB3625
A2R19	321-0321-07			RES.,FXD,FILM:21.5K OHM,0.1%,0.125W	91637	MFF1816C21501B
A2R22	308-0307-00			RES.,FXD,WW:5K OHM,1%,3W	91637	RS2B-B50000F
A2R23	321-0166-00			RES.,FXD,FILM:523 OHM,1%,0.125W	91637	MFF1816G523R0F
A2R24	315-0223-00			RES.,FXD,CMPSN:22K OHM,5%,0.25W	01121	CB2235
A2R25	311-1225-00			RES.,VAR,NONWIR:1K OHM,20%,0.50W	32997	3386F-T04-102
A2R26	315-0512-00			RES.,FXD,CMPSN:5.1K OHM,5%,0.25W	01121	CB5125
A2R27	321-1611-07			RES.,FXD,FILM:550 OHM,0.1%,0.125W	91637	MFF1816C550R0B
A2R31	321-1612-07			RES.,FXD,FILM:4.455K OHM,0.1%,0.125W	91637	MFF1816C44550B
A2R32	321-1611-07			RES.,FXD,FILM:550 OHM,0.1%,0.125W	91637	MFF1816C550R0B
A2R33	321-1612-07			RES.,FXD,FILM:4.455K OHM,0.1%,0.125W	91637	MFF1816C44550B
A2R34	321-1611-07			RES.,FXD,FILM:550 OHM,0.1%,0.125W	91637	MFF1816C550R0B
A2R35	321-1612-07			RES.,FXD,FILM:4.455K OHM,0.1%,0.125W	91637	MFF1816C44550B
A2R36	321-0813-07			RES.,FXD,FILM:495 OHM,0.1%,0.125W	91637	MFF1816C495R0B
A2R54	315-0362-00			RES.,FXD,CMPSN:3.6K OHM,5%,0.25W	01121	CB3625
A2R55	315-0102-00			RES.,FXD,CMPSN:1K OHM,5%,0.25W	01121	CB1025
A2R56	315-0511-00			RES.,FXD,CMPSN:510 OHM,5%,0.25W	01121	CB5115
A2R58	315-0302-00			RES.,FXD,CMPSN:3K OHM,5%,0.25W	01121	CB3025
A2R72	315-0751-00			RES.,FXD,CMPSN:750 OHM,5%,0.25W	01121	CB7515
A2R74	315-0682-00			RES.,FXD,CMPSN:6.8K OHM,5%,0.25W	01121	CB6825
A2R75	311-1373-00			RES.,VAR,NONWIR:5K OHM,20%,1W	01121	73U4G040L502M
A2R81	315-0302-00			RES.,FXD,CMPSN:3K OHM,5%,0.25W	01121	CB3025
A2R82	315-0474-00			RES.,FXD,CMPSN:470K OHM,5%,0.25W	01121	CB4745
A2R83	315-0362-00			RES.,FXD,CMPSN:3.6K OHM,5%,0.25W	01121	CB3625
A2R84	315-0682-00			RES.,FXD,CMPSN:6.8K OHM,5%,0.25W	01121	CB6825
A2R85	315-0682-00			RES.,FXD,CMPSN:6.8K OHM,5%,0.25W	01121	CB6825
A2R86	315-0474-00			RES.,FXD,CMPSN:470K OHM,5%,0.25W	01121	CB4745
A2R87	315-0474-00			RES.,FXD,CMPSN:470K OHM,5%,0.25W	01121	CB4745
A2R88	315-0682-00			RES.,FXD,CMPSN:6.8K OHM,5%,0.25W	01121	CB6825
A2R91	315-0162-00			RES.,FXD,CMPSN:1.6K OHM,5%,0.25W	01121	CB1625
A2R92	315-0302-00			RES.,FXD,CMPSN:3K OHM,5%,0.25W	01121	CB3025

http://manoman.sqhill.com

Component No.	Tektronix Part No.	Serial/Model No. Eff	Dscont	Name & Description	Mfr Code	Mfr Part Number
A2R93	315-0302-00			RES.,FXD,CMPSN:3K OHM,5%,0.25W	01121	CB3025
A2R94	315-0302-00			RES.,FXD,CMPSN:3K OHM,5%,0.25W	01121	CB3025
A2R95	315-0162-00			RES.,FXD,CMPSN:1.6K OHM,5%,0.25W	01121	CB1625
A2R96	315-0162-00			RES.,FXD,CMPSN:1.6K OHM,5%,0.25W	01121	CB1625
A2R97	315-0302-00			RES.,FXD,CMPSN:3K OHM,5%,0.25W	01121	CB3025
A2R98	315-0302-00			RES.,FXD,CMPSN:3K OHM,5%,0.25W	01121	CB3025
A2R99	315-0162-00			RES.,FXD,CMPSN:1.6K OHM,5%,0.25W	01121	CB1625
A2R102	315-0153-00			RES.,FXD,CMPSN:15K OHM,5%,0.25W	01121	CB1535
A2R121	315-0512-00			RES.,FXD,CMPSN:5.1K OHM,5%,0.25W	01121	CB5125
A2S1	263-0035-00			SWITCH PB ASSY:1 CANCEL,7.5MM,1 CONTACT	80009	263-0035-00
A2S2	263-0035-00			SWITCH PB ASSY:1 CANCEL,7.5MM,1 CONTACT	80009	263-0035-00
A2S40	263-0013-08			ACTR ASSY,PB:3 LATCH,10MM,5 CONT	80009	263-0013-08
A2S109	263-0013-09			ACTR ASSY,PB:3 LATCH,10MM,3 CONT	80009	263-0013-09
A2S110	263-0013-09			ACTR ASSY,PB:3 LATCH,10MM,3 CONT	80009	263-0013-09
A2U1	156-1177-01			MICROCIRCUIT,DI:10/4 LINE PRIORITY ENCODER	80009	156-1177-01
A2U51	156-0495-02			MICROCIRCUIT,LI:QUAD OPNL AMPL,SELECTED	01295	LM324J4
A2U52	156-0495-02			MICROCIRCUIT,LI:QUAD OPNL AMPL,SELECTED	01295	LM324J4
A2U61	156-0916-02			MICROCIRCUIT,DI:8-2 INP 3-STATE BFR,BURN	27014	DM81LS97
A2U62	156-0916-02			MICROCIRCUIT,DI:8-2 INP 3-STATE BFR,BURN	27014	DM81LS97
A2U70	156-0479-02			MICROCIRCUIT,DI:QUAD 2-INP ORGATE	01295	SN74LS32NP3
A2U71	156-0865-02			MICROCIRCUIT,DI:OCTAL D-TYPE FF W/CLEAR	01295	SN74LS273NP3
A2U72	156-0865-02			MICROCIRCUIT,DI:OCTAL D-TYPE FF W/CLEAR	01295	SN74LS273NP3
A2U73	156-0479-02			MICROCIRCUIT,DI:QUAD 2-INP ORGATE	01295	SN74LS32NP3

http://manoman.sqhill.com

Component No.	Tektronix Part No.	Serial/Model No. Eff	Dscont	Name & Description	Mfr Code	Mfr Part Number
A3	----- -----			CKT BOARD ASSY:FRONT PANEL		
A3C110	283-0111-00			CAP.,FXD,CER DI:0.1UF,20%,50V	72982	8121-N088Z5U104M
A3C130	283-0111-00			CAP.,FXD,CER DI:0.1UF,20%,50V	72982	8121-N088Z5U104M
A3C131	283-0111-00			CAP.,FXD,CER DI:0.1UF,20%,50V	72982	8121-N088Z5U104M
A3C132	283-0111-00			CAP.,FXD,CER DI:0.1UF,20%,50V	72982	8121-N088Z5U104M
A3C230	283-0111-00			CAP.,FXD,CER DI:0.1UF,20%,50V	72982	8121-N088Z5U104M
A3C231	283-0111-00			CAP.,FXD,CER DI:0.1UF,20%,50V	72982	8121-N088Z5U104M
A3C430	283-0111-00	XB010151		CAP.,FXD,CER DI:0.1UF,20%,50V	72982	8121-N088Z5U104M
A3C510	283-0111-00			CAP.,FXD,CER DI:0.1UF,20%,50V	72982	8121-N088Z5U104M
A3C511	283-0268-00			CAP.,FXD,CER DI:0.015UF,10%,50V	72982	8121N083X7R0153K
A3C610	283-0111-00			CAP.,FXD,CER DI:0.1UF,20%,50V	72982	8121-N088Z5U104M
A3LS520	119-0709-00			LOUDSPEAKER,PM:2.25 IN,45 OHM		
A3Q110	151-0190-05			TRANSISTOR:SILICON,NPN	80009	151-0190-05
A3Q120	151-0190-05			TRANSISTOR:SILICON,NPN	80009	151-0190-05
A3Q121	151-0190-05			TRANSISTOR:SILICON,NPN	80009	151-0190-05
A3Q220	151-0190-05			TRANSISTOR:SILICON,NPN	80009	151-0190-05
A3Q221	151-0190-05			TRANSISTOR:SILICON,NPN	80009	151-0190-05
A3Q330	151-0190-05			TRANSISTOR:SILICON,NPN	80009	151-0190-05
A3R110	315-0202-00			RES.,FXD,CMPSN:2K OHM,5%,0.25W	01121	CB2025
A3R130	315-0512-00			RES.,FXD,CMPSN:5.1K OHM,5%,0.25W	01121	CB5125
A3R131	315-0512-00			RES.,FXD,CMPSN:5.1K OHM,5%,0.25W	01121	CB5125
A3R132	315-0512-00			RES.,FXD,CMPSN:5.1K OHM,5%,0.25W	01121	CB5125
A3R230	315-0512-00			RES.,FXD,CMPSN:5.1K OHM,5%,0.25W	01121	CB5125
A3R231	315-0512-00			RES.,FXD,CMPSN:5.1K OHM,5%,0.25W	01121	CB5125
A3R300	315-0223-00			RES.,FXD,CMPSN:22K OHM,5%,0.25W	01121	CB2235
A3R301	315-0223-00			RES.,FXD,CMPSN:22K OHM,5%,0.25W	01121	CB2235
A3R302	315-0223-00			RES.,FXD,CMPSN:22K OHM,5%,0.25W	01121	CB2235
A3R303	315-0223-00			RES.,FXD,CMPSN:22K OHM,5%,0.25W	01121	CB2235
A3R310	315-0223-00			RES.,FXD,CMPSN:22K OHM,5%,0.25W	01121	CB2235
A3R311	315-0223-00			RES.,FXD,CMPSN:22K OHM,5%,0.25W	01121	CB2235
A3R312	315-0223-00			RES.,FXD,CMPSN:22K OHM,5%,0.25W	01121	CB2235
A3R313	315-0223-00			RES.,FXD,CMPSN:22K OHM,5%,0.25W	01121	CB2235
A3R320	315-0221-00			RES.,FXD,CMPSN:220 OHM,5%,0.25W	01121	CB2215
A3R321	315-0221-00			RES.,FXD,CMPSN:220 OHM,5%,0.25W	01121	CB2215
A3R322	315-0221-00			RES.,FXD,CMPSN:220 OHM,5%,0.25W	01121	CB2215
A3R323	315-0221-00			RES.,FXD,CMPSN:220 OHM,5%,0.25W	01121	CB2215
A3R324	315-0221-00			RES.,FXD,CMPSN:220 OHM,5%,0.25W	01121	CB2215
A3R610	315-0223-00			RES.,FXD,CMPSN:22K OHM,5%,0.25W	01121	CB2235
A3R611	315-0132-00			RES.,FXD,CMPSN:1.3K OHM,5%,0.25W	01121	CB1325
A3U400	156-0994-02			MICROCIRCUIT,DI:8 INPUT DATA SEL/MUX	01295	SN74LS151NP3
A3U510	156-0384-02			MICROCIRCUIT,DI:QUAD 2-INP NAND GATE	80009	156-0384-02
A3U520	156-0469-02			MICROCIRCUIT,DI:3/8 LINE DCDR	01295	SN74LS138NP3

http://manoman.sqhill.com

Component No.	Tektronix Part No.	Serial/Model No. Eff	Dscont	Name & Description	Mfr Code	Mfr Part Number
A4	----- -----			CKT BOARD ASSY:FR PANEL BUTTON		
A4DS620	150-1036-00			LAMP,LED:RED,3.0V,40MA	01295	TIL 209A
A4DS621	150-1036-00			LAMP,LED:RED,3.0V,40MA	01295	TIL 209A
A4DS700	150-1036-00			LAMP,LED:RED,3.0V,40MA	01295	TIL 209A
A4DS720	150-1036-00			LAMP,LED:RED,3.0V,40MA	01295	TIL 209A
A4DS721	150-1036-00			LAMP,LED:RED,3.0V,40MA	01295	TIL 209A
A4S100	131-2202-00			CONTACT,ELEC:BERYLLIUM COPPER	52961	ENG#8000
A4S110	131-2202-00			CONTACT,ELEC:BERYLLIUM COPPER	52961	ENG#8000
A4S120	131-2202-00			CONTACT,ELEC:BERYLLIUM COPPER	52961	ENG#8000
A4S130	131-2202-00			CONTACT,ELEC:BERYLLIUM COPPER	52961	ENG#8000
A4S140	131-2202-00			CONTACT,ELEC:BERYLLIUM COPPER	52961	ENG#8000
A4S200	131-2202-00			CONTACT,ELEC:BERYLLIUM COPPER	52961	ENG#8000
A4S210	131-2202-00			CONTACT,ELEC:BERYLLIUM COPPER	52961	ENG#8000
A4S220	131-2202-00			CONTACT,ELEC:BERYLLIUM COPPER	52961	ENG#8000
A4S230	131-2202-00			CONTACT,ELEC:BERYLLIUM COPPER	52961	ENG#8000
A4S240	131-2202-00			CONTACT,ELEC:BERYLLIUM COPPER	52961	ENG#8000
A4S300	131-2202-00			CONTACT,ELEC:BERYLLIUM COPPER	52961	ENG#8000
A4S310	131-2202-00			CONTACT,ELEC:BERYLLIUM COPPER	52961	ENG#8000
A4S320	131-2202-00			CONTACT,ELEC:BERYLLIUM COPPER	52961	ENG#8000
A4S330	131-2202-00			CONTACT,ELEC:BERYLLIUM COPPER	52961	ENG#8000
A4S340	131-2202-00			CONTACT,ELEC:BERYLLIUM COPPER	52961	ENG#8000
A4S400	131-2202-00			CONTACT,ELEC:BERYLLIUM COPPER	52961	ENG#8000
A4S410	131-2202-00			CONTACT,ELEC:BERYLLIUM COPPER	52961	ENG#8000
A4S420	131-2202-00			CONTACT,ELEC:BERYLLIUM COPPER	52961	ENG#8000
A4S440	131-2202-00			CONTACT,ELEC:BERYLLIUM COPPER	52961	ENG#8000
A4S500	131-2202-00			CONTACT,ELEC:BERYLLIUM COPPER	52961	ENG#8000
A4S510	131-2202-00			CONTACT,ELEC:BERYLLIUM COPPER	52961	ENG#8000
A4S540	131-2202-00			CONTACT,ELEC:BERYLLIUM COPPER	52961	ENG#8000
A4S600	131-2202-00			CONTACT,ELEC:BERYLLIUM COPPER	52961	ENG#8000
A4S610	131-2202-00			CONTACT,ELEC:BERYLLIUM COPPER	52961	ENG#8000
A4S630	131-2202-00			CONTACT,ELEC:BERYLLIUM COPPER	52961	ENG#8000
A4S640	131-2202-00			CONTACT,ELEC:BERYLLIUM COPPER	52961	ENG#8000
A4S710	131-2202-00			CONTACT,ELEC:BERYLLIUM COPPER	52961	ENG#8000
A4S730	131-2202-00			CONTACT,ELEC:BERYLLIUM COPPER	52961	ENG#8000
A4S740	131-2202-00			CONTACT,ELEC:BERYLLIUM COPPER	52961	ENG#8000

http://manoman.sqhill.com

Component No.	Tektronix Part No.	Serial/Model No. Eff	Dscont	Name & Description	Mfr Code	Mfr Part Number
A5	----- -----			CKT BOARD ASSY:INTENSITY		
A5R50	311-1195-00			RES.,VAR,NONWIR:PNL,5K X1M OHM,0.5W	01121	16M968
A5R70	311-1195-00			RES.,VAR,NONWIR:PNL,5K X1M OHM,0.5W	01121	16M968
A5R71	317-0472-00			RES.,FXD,CMPSN:4.7K OHM,5%,0.125W	01121	BB4725
A5R76	317-0472-00	B010100	B010150	RES.,FXD,CMPSN:4.7K OHM,5%,0.125W	01121	BB4725
A5R76	317-0432-00	B010151		RES.,FXD,CMPSN:4.3K OHM,5%,0.125W	01121	BB4325
A5R75,S69	311-1839-00			RES.,VAR,NONWIR:5K OHM,20%,0.50W,W/4PST SW	01121	14M083
A5S60,R60,R65	311-2018-00			RES.,VAR,NONWIR:5K OHM,20%,0.5W	01121	19M107
A6	----- -----			CKT BOARD ASSY:POT ADJUST		
A6R80	311-1484-00	B010100	B010150	RES.,VAR,NONWIR:PNL,2.5K OHM,1W	01121	11M110
A6R80	311-1368-00	B010151		RES.,VAR,NONWIR:5K OHM,20%,1W	01121	73A1G040L502M
A6R142	311-1484-00			RES.,VAR,NONWIR:PNL,2.5K OHM,1W	01121	11M110
A6R148	311-1238-00			RES.,VAR,NONWIR:5K OHM,10%,0.50W	73138	72-27-0
A6R160	311-1483-00			RES.,VAR,NONWIR:100K OHM,20%,1W	01121	73A1G040L104M

http://manoman.sqhill.com

Component No.	Tektronix Part No.	Serial/Model No. Eff	Dscont	Name & Description	Mfr Code	Mfr Part Number
A7	----- -----			CKT BOARD ASSY:AUX REGULATOR		
A7C7	290-0782-00			CAP.,FXD,ELCTLT:4.7UF,+75-10%,35V	55680	35ULA4R7V-T
A7C11	281-0580-00			CAP.,FXD,CER DI:470PF,10%,500V	04222	7001-1374
A7C40	283-0212-00			CAP.,FXD,CER DI:2UF,20%,50V	72982	8141N064Z5U205M
A7C41	283-0177-00			CAP.,FXD,CER DI:1UF,+80-20%,25V	56289	273C5
A7C42	290-0770-00			CAP.,FXD,ELCTLT:100UF,+50-10%,25V	56289	502D230
A7C61	290-0770-00			CAP.,FXD,ELCTLT:100UF,+50-10%,25V	56289	502D230
A7C62	290-0745-00			CAP.,FXD,ELCTLT:22UF,+50-10%,25V	56289	502D225
A7C63	290-0770-00			CAP.,FXD,ELCTLT:100UF,+50-10%,25V	56289	502D230
A7C64	283-0177-00			CAP.,FXD,CER DI:1UF,+80-20%,25V	56289	273C5
A7C68	290-0771-00			CAP.,FXD,ELCTLT:220UF,+50-10%,10VDC	54473	ECE-A10V220L
A7C74	283-0128-00	B010100	B010150	CAP.,FXD,CER DI:100PF,5%,500V	72982	871-536T2H101J
A7C74	283-0094-00	B010151		CAP.,FXD,CER DI:27PF,10%,200V	59660	835-583-C0G0270K
A7C84	290-0745-00			CAP.,FXD,ELCTLT:22UF,+50-10%,25V	56289	502D225
A7C85	283-0003-00			CAP.,FXD,CER DI:0.01UF,+80-20%,150V	91418	SP103Z151-4R9
A7C86	290-0782-00			CAP.,FXD,ELCTLT:4.7UF,+75-10%,35V	55680	35ULA4R7V-T
A7C91	283-0198-00			CAP.,FXD,CER DI:0.22UF,20%,50V	72982	8121N083Z5U0224M
A7C92	290-0773-00			CAP.,FXD,ELCTLT:1000UF,+50-10%,10V	0000L	ECE-B10Z1000
A7C95	290-0778-00			CAP.,FXD,ELCTLT:1UF,+50-10%,50V	54473	ECE-A50N1
A7C98	283-0111-00			CAP.,FXD,CER DI:0.1UF,20%,50V	72982	8121-N088Z5U104M
A7CR3	152-0141-02			SEMICOND DEVICE:SILICON,30V,150MA	01295	1N4152R
A7CR4	152-0141-02			SEMICOND DEVICE:SILICON,30V,150MA	01295	1N4152R
A7CR11	152-0141-02			SEMICOND DEVICE:SILICON,30V,150MA	01295	1N4152R
A7CR51	152-0141-02			SEMICOND DEVICE:SILICON,30V,150MA	01295	1N4152R
A7CR52	152-0141-02			SEMICOND DEVICE:SILICON,30V,150MA	01295	1N4152R
A7CR53	152-0141-02			SEMICOND DEVICE:SILICON,30V,150MA	01295	1N4152R
A7CR66	152-0582-00			SEMICOND DEVICE:SILICON,20V,3A	80009	152-0582-00
A7CR88	152-0141-02			SEMICOND DEVICE:SILICON,30V,150MA	01295	1N4152R
A7CR92	152-0066-03			SEMICOND DEVICE:RECT,SI,400V,1A	80009	152-0066-03
A7CR95	152-0141-02			SEMICOND DEVICE:SILICON,30V,150MA	01295	1N4152R
A7CR96	152-0141-02			SEMICOND DEVICE:SILICON,30V,150MA	01295	1N4152R
A7L61	108-0473-00			COIL,RF:150UH	80009	108-0473-00
A7L62	108-0473-00			COIL,RF:150UH	80009	108-0473-00
A7L68	108-0337-00			COIL,RF:25UH	80009	108-0337-00
A7L84	108-0337-00			COIL,RF:25UH	80009	108-0337-00
A7Q13	151-0302-01			TRANSISTOR:SILICON,NPN,SEL	80009	151-0302-01
A7Q14	151-0349-00			TRANSISTOR:SILICON,NPN,SEL FROM MJE2801	04713	SJE924
A7Q15	151-0477-00			TRANSISTOR:SILICON,NPN	04713	SJE374
A7Q58	151-0188-03			TRANSISTOR:SILICON,PNP,SEL	80009	151-0188-03
A7Q66	151-0352-00			TRANSISTOR:SILICON,NPN	03508	X44C282
A7Q76	151-0220-00			TRANSISTOR:SILICON,PNP	07263	S036228
A7Q77	151-0220-00			TRANSISTOR:SILICON,PNP	07263	S036228
A7Q79	151-0302-01			TRANSISTOR:SILICON,NPN,SEL	80009	151-0302-01
A7R2	315-0202-00			RES.,FXD,CMPSN:2K OHM,5%,0.25W	01121	CB2025
A7R3	315-0331-00			RES.,FXD,CMPSN:330 OHM,5%,0.25W	01121	CB3315
A7R4	315-0331-00			RES.,FXD,CMPSN:330 OHM,5%,0.25W	01121	CB3315
A7R5	315-0821-00			RES.,FXD,CMPSN:820 OHM,5%,0.25W	01121	CB8215
A7R7	315-0432-00			RES.,FXD,CMPSN:4.3K OHM,5%,0.25W	01121	CB4325
A7R8	315-0432-00			RES.,FXD,CMPSN:4.3K OHM,5%,0.25W	01121	CB4325
A7R13	315-0512-00			RES.,FXD,CMPSN:5.1K OHM,5%,0.25W	01121	CB5125
A7R15	315-0101-00			RES.,FXD,CMPSN:100 OHM,5%,0.25W	01121	CB1015
A7R21	315-0131-00			RES.,FXD,CMPSN:130 OHM,5%,0.25W	01121	CB1315
A7R22	315-0123-00			RES.,FXD,CMPSN:12K OHM,5%,0.25W	01121	CB1235
A7R23	315-0623-00			RES.,FXD,CMPSN:62K OHM,5%,0.25W	01121	CB6235
A7R26	308-0804-00			RES.,FXD,NONWIR:0.025 OHM,5%,0.5W	80009	308-0804-00
A7R27	308-0804-00			RES.,FXD,NONWIR:0.025 OHM,5%,0.5W	80009	308-0804-00
A7R29	315-0432-00			RES.,FXD,CMPSN:4.3K OHM,5%,0.25W	01121	CB4325

http://manoman.sqhill.com

Component No.	Tektronix Part No.	Serial/Model No. Eff	Dscont	Name & Description	Mfr Code	Mfr Part Number
A7R31	315-0912-00			RES.,FXD,CMPSN:9.1K OHM,5%,0.25W	01121	CB9125
A7R32	315-0151-00			RES.,FXD,CMPSN:150 OHM,5%,0.25W	01121	CB1515
A7R51	321-0313-00			RES.,FXD,FILM:17.8K OHM,1%,0.125W	91637	MFF1816G17801F
A7R52	321-0277-00			RES.,FXD,FILM:7.5K OHM,1%,0.125W	91637	MFF1816G75000F
A7R53	321-0322-00			RES.,FXD,FILM:22.1K OHM,1%,0.125W	91637	MFF1816G22101F
A7R54	321-0317-00			RES.,FXD,FILM:19.6K OHM,1%,0.125W	91637	MFF1816G19601F
A7R55	315-0102-00			RES.,FXD,CMPSN:1K OHM,5%,0.25W	01121	CB1025
A7R57	315-0431-00			RES.,FXD,CMPSN:430 OHM,5%,0.25W	01121	CB4315
A7R58	315-0102-00			RES.,FXD,CMPSN:1K OHM,5%,0.25W	01121	CB1025
A7R64	315-0470-00			RES.,FXD,CMPSN:47 OHM,5%,0.25W	01121	CB4705
A7R71	321-0232-00			RES.,FXD,FILM:2.55K OHM,1%,0.125W	91637	MFF1816G25500F
A7R72	321-0260-00			RES.,FXD,FILM:4.99K OHM,1%,0.125W	91637	MFF1816G49900F
A7R74	315-0272-00			RES.,FXD,CMPSN:2.7K OHM,5%,0.25W	01121	CB2725
A7R75	315-0184-00			RES.,FXD,CMPSN:180K OHM,5%,0.25W	01121	CB1845
A7R76	315-0102-00			RES.,FXD,CMPSN:1K OHM,5%,0.25W	01121	CB1025
A7R79	315-0271-00			RES.,FXD,CMPSN:270 OHM,5%,0.25W	01121	CB2715
A7R81	315-0333-00			RES.,FXD,CMPSN:33K OHM,5%,0.25W	01121	CB3335
A7R82	315-0151-00			RES.,FXD,CMPSN:150 OHM,5%,0.25W	01121	CB1515
A7R85	315-0274-00			RES.,FXD,CMPSN:270K OHM,5%,0.25W	01121	CB2745
A7R86	315-0104-00			RES.,FXD,CMPSN:100K OHM,5%,0.25W	01121	CB1045
A7R87	315-0103-00			RES.,FXD,CMPSN:10K OHM,5%,0.25W	01121	CB1035
A7R88	315-0564-00			RES.,FXD,CMPSN:560K OHM,5%,0.25W	01121	CB5645
A7R95	315-0124-00			RES.,FXD,CMPSN:120K OHM,5%,0.25W	01121	CB1245
A7R96	315-0122-00			RES.,FXD,CMPSN:1.2K OHM,5%,0.25W	01121	CB1225
A7R98	315-0273-00			RES.,FXD,CMPSN:27K OHM,5%,0.25W	01121	CB2735
A7T66	120-0784-00			TRANSFORMER,PLS:SWITCHING RGLTR	80009	120-0784-00
A7U10	156-0158-03			MICROCIRCUIT,LI:DUAL OPNL AMPL,CHK	80009	156-0158-03
A7U40	156-0285-01			MICROCIRCUIT,LI:VOLTAGE REGULATOR,CHK	80009	156-0285-01
A7U86	156-0158-03			MICROCIRCUIT,LI:DUAL OPNL AMPL,CHK	80009	156-0158-03
A7VR55	152-0195-00			SEMICOND DEVICE:ZENER,0.4W,5.1V,5%	04713	SZ11755

http://manoman.sqhill.com

Component No.	Tektronix Part No.	Serial/Model No. Eff	Dscont	Name & Description	Mfr Code	Mfr Part Number
A9	----- -----			CKT BOARD ASSY:HORIZ CHANNEL SW		
A9C9	283-0195-00			CAP.,FXD,CER DI:680PF,5%,50V	72982	8121N075C0G0681J
A9C11	283-0111-00			CAP.,FXD,CER DI:0.1UF,20%,50V	72982	8121-N088Z5U104M
A9C14	283-0195-00			CAP.,FXD,CER DI:680PF,5%,50V	72982	8121N075C0G0681J
A9C33	283-0067-00			CAP.,FXD,CER DI:0.001UF,10%,200V	72982	835-515B102K
A9C40	283-0111-00			CAP.,FXD,CER DI:0.1UF,20%,50V	72982	8121-N088Z5U104M
A9C41	281-0123-00			CAP.,VAR,CER DI:5-25PF,100V	72982	518-000A5-25
A9C44	283-0076-00	XB010325		CAP.,FXD,CER DI:27PF,10%,500V	56289	40C287A2
	----- -----			(NOMINAL VALUE,SELECTED)		
A9C49	283-0111-00			CAP.,FXD,CER DI:0.1UF,20%,50V	72982	8121-N088Z5U104M
A9C63	283-0067-00			CAP.,FXD,CER DI:0.001UF,10%,200V	72982	835-515B102K
A9C65	281-0123-00			CAP.,VAR,CER DI:5-25PF,100V	72982	518-000A5-25
A9C81	290-0778-00			CAP.,FXD,ELCTLT:1UF,+50-10%,50V	54473	ECE-A50N1
A9C82	290-0778-00			CAP.,FXD,ELCTLT:1UF,+50-10%,50V	54473	ECE-A50N1
A9C83	290-0745-00			CAP.,FXD,ELCTLT:22UF,+50-10%,25V	56289	502D225
A9C84	290-0778-00			CAP.,FXD,ELCTLT:1UF,+50-10%,50V	54473	ECE-A50N1
A9CR36	152-0141-02			SEMICOND DEVICE:SILICON,30V,150MA	01295	1N4152R
A9L41	108-0578-00			COIL,RF:FIXED,45NH	80009	108-0578-00
A9L81	108-0245-00			COIL,RF:3.9UH	76493	B6310-1
A9L82	108-0245-00			COIL,RF:3.9UH	76493	B6310-1
A9L83	108-0598-00			COIL,RF:200UH	80009	108-0598-00
A9L84	108-0245-00			COIL,RF:3.9UH	76493	B6310-1
A9Q32	151-0221-00			TRANSISTOR:SILICON,PNP	04713	SPS246
A9Q35	151-0220-00			TRANSISTOR:SILICON,PNP	07263	S036228
A9Q37	151-0223-03			TRANSISTOR:NPN,SI,PRESTRESSED & TESTED	80009	151-0223-03
A9Q62	151-0221-00			TRANSISTOR:SILICON,PNP	04713	SPS246
A9Q65	151-0220-00			TRANSISTOR:SILICON,PNP	07263	S036228
A9Q66	151-0223-03			TRANSISTOR:NPN,SI,PRESTRESSED & TESTED	80009	151-0223-03
A9Q67	151-0223-03			TRANSISTOR:NPN,SI,PRESTRESSED & TESTED	80009	151-0223-03
A9R1	321-1068-01			RES.,FXD,FILM:50.5 OHM,0.5%,0.125W	91637	MFF1816G50R50D
A9R2	321-1068-01			RES.,FXD,FILM:50.5 OHM,0.5%,0.125W	91637	MFF1816G50R50D
A9R3	321-1068-01			RES.,FXD,FILM:50.5 OHM,0.5%,0.125W	91637	MFF1816G50R50D
A9R4	321-1068-01			RES.,FXD,FILM:50.5 OHM,0.5%,0.125W	91637	MFF1816G50R50D
A9R6	323-0187-00			RES.,FXD,FILM:866 OHM,1%,0.50W	75042	CECT0-8660F
A9R7	321-0074-00			RES.,FXD,FILM:57.6 OHM,1%,0.125W	91637	MFF1816G57R60F
A9R8	321-0074-00			RES.,FXD,FILM:57.6 OHM,1%,0.125W	91637	MFF1816G57R60F
A9R9	317-0363-00			RES.,FXD,CMPSN:36K OHM,5%,0.125W	01121	BB3635
A9R11	323-0187-00			RES.,FXD,FILM:866 OHM,1%,0.50W	75042	CECT0-8660F
A9R12	321-0074-00			RES.,FXD,FILM:57.6 OHM,1%,0.125W	91637	MFF1816G57R60F
A9R13	321-0074-00			RES.,FXD,FILM:57.6 OHM,1%,0.125W	91637	MFF1816G57R60F
A9R14	317-0363-00			RES.,FXD,CMPSN:36K OHM,5%,0.125W	01121	BB3635
A9R21	321-0218-00			RES.,FXD,FILM:1.82K OHM,1%,0.125W	91637	MFF1816G18200F
A9R31	323-0173-00			RES.,FXD,FILM:619 OHM,1%,0.50W	75042	CECT0-6190F
A9R32	317-0510-00			RES.,FXD,CMPSN:51 OHM,5%,0.125W	01121	BB5105
A9R33	321-0095-00			RES.,FXD,FILM:95.3 OHM,1%,0.125W	91637	MFF1816G95R30F
A9R36	321-0111-00			RES.,FXD,FILM:140 OHM,1%,0.125W	91637	MFF1816G140R0F
A9R37	321-0065-00			RES.,FXD,FILM:46.4 OHM,1%,0.125W	91637	MFF1816G46R40F
A9R41	311-0978-00			RES.,VAR,NONWIR:250 OHM,10%,0.50W	73138	82-4-2
A9R42	311-1007-00			RES.,VAR,NONWIR:20 OHM,20%,0.50W	73138	82-38-1
A9R43	321-0026-00			RES.,FXD,FILM:18.2 OHM,1%,0.125W	91637	MFF1816G18R20F
A9R44	315-0241-00	XB010325		RES.,FXD,CMPSN:240 OHM,5%,0.25W	01121	CB2415
	----- -----			(NOMINAL VALUE,SELECTED)		
A9R45	311-1268-00			RES.,VAR,NONWIR:10K OHM,10%,0.50W	32997	3329P-L58-103
A9R46	321-0270-00			RES.,FXD,FILM:6.34K OHM,1%,0.125W	91637	MFF1816G63400F
A9R47	321-0162-00			RES.,FXD,FILM:475 OHM,1%,0.125W	91637	MFF1816G475R0F
A9R48	321-0136-00			RES.,FXD,FILM:255 OHM,1%,0.125W	91637	MFF1816G255R0F
A9R51	321-0053-00			RES.,FXD,FILM:34.8 OHM,1%,0.125W	91637	MFF1816G34R80F
A9R61	323-0173-00			RES.,FXD,FILM:619 OHM,1%,0.50W	75042	CECT0-6190F
A9R62	317-0510-00			RES.,FXD,CMPSN:51 OHM,5%,0.125W	01121	BB5105

http://manoman.sqhill.com

Component No.	Tektronix Part No.	Serial/Model No. Eff	Dscont	Name & Description	Mfr Code	Mfr Part Number
A9R63	321-0095-00			RES.,FXD,FILM:95.3 OHM,1%,0.125W	91637	MFF1816G95R30F
A9R65	311-0635-00			RES.,VAR,NONWIR:1K OHM,10%,0.50W	73138	82-32-0
A9R67	321-0065-00			RES.,FXD,FILM:46.4 OHM,1%,0.125W	91637	MFF1816G46R40F
A9R83	307-0103-00			RES.,FXD,CMPSN:2.7 OHM,5%,0.25W	01121	CB27G5
A9RT52	307-0124-00			RES.,THERMAL:5K OHM,10%	50157	1D1618
A9U20	155-0022-00			MICROCIRCUIT,DI:ML,CHANNEL SWITCH	80009	155-0022-00

http://manoman.sqhill.com

Component No.	Tektronix Part No.	Serial/Model No. Eff	Dscont	Name & Description	Mfr Code	Mfr Part Number
A11	----- -----			CKT BOARD ASSY:MAIN INTERFACE		
A11C3	283-0203-00			CAP.,FXD,CER DI:0.47UF,20%,50V	72982	8131N075E474M
A11C4	283-0203-00			CAP.,FXD,CER DI:0.47UF,20%,50V	72982	8131N075E474M
A11C7	283-0111-00			CAP.,FXD,CER DI:0.1UF,20%,50V	72982	8121-N088Z5U104M
A11C14	281-0524-00	B010100	B010189	CAP.,FXD,CER DI:150PF,+/-30PF,500V	04222	7001-1381
A11C14	281-0538-00	B010190		CAP.,FXD,CER DI:1PF,20%,500V	80009	281-0538-00
A11C21	281-0524-00	B010100	B010189	CAP.,FXD,CER DI:150PF,+/-30PF,500V	04222	7001-1381
A11C21	281-0536-00	B010190		CAP.,FXD,CER DI:1000PF,10%,500V	72982	301000 X 5P0102K
A11C77	281-0547-00			CAP.,FXD,CER DI:2.7PF,10%,500V	04222	7001-1321
A11C86	283-0080-00			CAP.,FXD,CER DI:0.022UF,+80-20%,25V	56289	19C611
A11C87	283-0080-00			CAP.,FXD,CER DI:0.022UF,+80-20%,25V	56289	19C611
A11C112	283-0003-00			CAP.,FXD,CER DI:0.01UF,+80-20%,150V	91418	SP103Z151-4R9
A11C116	283-0111-00			CAP.,FXD,CER DI:0.1UF,20%,50V	72982	8121-N088Z5U104M
A11C119	281-0775-00			CAP.,FXD,CER DI:0.1UF,20%,50V	72982	8005D9AABZ5U104M
A11C120	281-0775-00			CAP.,FXD,CER DI:0.1UF,20%,50V	72982	8005D9AABZ5U104M
A11C121	290-0747-00			CAP.,FXD,ELCTLT:100UF,+50-10%,25V	56289	500D148
A11C122	290-0747-00			CAP.,FXD,ELCTLT:100UF,+50-10%,25V	56289	500D148
A11C123	290-0769-00			CAP.,FXD,ELCTLT:10UF,+50-10%,100V	0000W	100T10
A11C124	290-0769-00			CAP.,FXD,ELCTLT:10UF,+50-10%,100V	0000W	100T10
A11C125	290-0747-00			CAP.,FXD,ELCTLT:100UF,+50-10%,25V	56289	500D148
A11C126	281-0775-00			CAP.,FXD,CER DI:0.1UF,20%,50V	72982	8005D9AABZ5U104M
A11C127	281-0775-00			CAP.,FXD,CER DI:0.1UF,20%,50V	72982	8005D9AABZ5U104M
A11C128	281-0775-00			CAP.,FXD,CER DI:0.1UF,20%,50V	72982	8005D9AABZ5U104M
A11C129	281-0783-00			CAP.,FXD,CER DI:0.1UF,20%,100V	72982	8045-D-Z5U104M
A11C130	281-0783-00			CAP.,FXD,CER DI:0.1UF,20%,100V	72982	8045-D-Z5U104M
A11C131	281-0783-00			CAP.,FXD,CER DI:0.1UF,20%,100V	72982	8045-D-Z5U104M
A11C132	281-0783-00			CAP.,FXD,CER DI:0.1UF,20%,100V	72982	8045-D-Z5U104M
A11C133	281-0775-00			CAP.,FXD,CER DI:0.1UF,20%,50V	72982	8005D9AABZ5U104M
A11C134	281-0775-00			CAP.,FXD,CER DI:0.1UF,20%,50V	72982	8005D9AABZ5U104M
A11C143	283-0203-00			CAP.,FXD,CER DI:0.47UF,20%,50V	72982	8131N075E474M
A11C160	283-0203-00			CAP.,FXD,CER DI:0.47UF,20%,50V	72982	8131N075E474M
A11CR19	152-0141-02			SEMICOND DEVICE:SILICON,30V,150MA	01295	1N4152R
A11CR49	152-0141-02			SEMICOND DEVICE:SILICON,30V,150MA	01295	1N4152R
A11CR63	152-0141-02			SEMICOND DEVICE:SILICON,30V,150MA	01295	1N4152R
A11CR77	152-0141-02			SEMICOND DEVICE:SILICON,30V,150MA	01295	1N4152R
A11CR79	152-0141-02			SEMICOND DEVICE:SILICON,30V,150MA	01295	1N4152R
A11CR82	152-0141-02			SEMICOND DEVICE:SILICON,30V,150MA	01295	1N4152R
A11CR84	152-0141-02			SEMICOND DEVICE:SILICON,30V,150MA	01295	1N4152R
A11CR113	152-0141-02			SEMICOND DEVICE:SILICON,30V,150MA	01295	1N4152R
A11CR116	152-0141-02			SEMICOND DEVICE:SILICON,30V,150MA	01295	1N4152R
A11CR117	152-0141-02			SEMICOND DEVICE:SILICON,30V,150MA	01295	1N4152R
A11CR136	152-0141-02			SEMICOND DEVICE:SILICON,30V,150MA	01295	1N4152R
A11Q17	151-0223-03			TRANSISTOR:NPN,SI,PRESTRESSED & TESTED	80009	151-0223-03
A11Q19	151-0223-03			TRANSISTOR:NPN,SI,PRESTRESSED & TESTED	80009	151-0223-03
A11Q27	151-0190-05			TRANSISTOR:SILICON,NPN	80009	151-0190-05
A11Q36	151-0190-05			TRANSISTOR:SILICON,NPN	80009	151-0190-05
A11Q61	151-0190-05			TRANSISTOR:SILICON,NPN	80009	151-0190-05
A11Q64	151-0190-05			TRANSISTOR:SILICON,NPN	80009	151-0190-05
A11Q139	151-0190-05			TRANSISTOR:SILICON,NPN	80009	151-0190-05
A11Q147	151-0190-05			TRANSISTOR:SILICON,NPN	80009	151-0190-05
A11R2	315-0510-00			RES.,FXD,CMPSN:51 OHM,5%,0.25W	01121	CB5105
A11R3	307-0106-00			RES.,FXD,CMPSN:4.7 OHM,5%,0.25W	01121	CB47G5
A11R4	307-0106-00			RES.,FXD,CMPSN:4.7 OHM,5%,0.25W	01121	CB47G5
A11R7	315-0471-00			RES.,FXD,CMPSN:470 OHM,5%,0.25W	01121	CB4715
A11R8	321-0260-00			RES.,FXD,FILM:4.99K OHM,1%,0.125W	91637	MFF1816G49900F
A11R9	321-0260-00			RES.,FXD,FILM:4.99K OHM,1%,0.125W	91637	MFF1816G49900F
A11R13	315-0562-00	B010100	B010189	RES.,FXD,CMPSN:5.6K OHM,5%,0.25W	01121	CB5625

http://manoman.sqhill.com

Component No.	Tektronix Part No.	Serial/Model No. Eff	Dscont	Name & Description	Mfr Code	Mfr Part Number
A11R13	315-0332-00	B010190		RES.,FXD,CMPSN:3.3K OHM,5%,0.25W	01121	CB3325
A11R14	315-0222-00	B010100	B010189	RES.,FXD,CMPSN:2.2K OHM,5%,0.25W	01121	CB2225
A11R14	315-0152-00	B010190		RES.,FXD,CMPSN:1.5K OHM,5%,0.25W	01121	CB1525
A11R15	315-0133-00	B010100	B010189	RES.,FXD,CMPSN:13K OHM,5%,0.25W	01121	CB1335
A11R15	315-0912-00	B010190		RES.,FXD,CMPSN:9.1K OHM,5%,0.25W	01121	CB9125
A11R16	315-0241-00			RES.,FXD,CMPSN:240 OHM,5%,0.25W	01121	CB2415
A11R17	321-0151-00			RES.,FXD,FILM:365 OHM,1%,0.125W	91637	MFF1816G365R0F
A11R18	315-0162-00			RES.,FXD,CMPSN:1.6K OHM,5%,0.25W	01121	CB1625
A11R19	321-0151-00			RES.,FXD,FILM:365 OHM,1%,0.125W	91637	MFF1816G365R0F
A11R20	317-0470-00	XB010190		RES.,FXD,CMPSN:47 OHM,5%,0.125W	01121	BB4705
A11R21	315-0132-00	B010100	B010189	RES.,FXD,CMPSN:1.3K OHM,5%,0.25W	01121	CB1325
A11R21	315-0431-00	B010190		RES.,FXD,CMPSN:430 OHM,5%,0.25W	01121	CB4315
A11R22	315-0103-00	B010100	B010189	RES.,FXD,CMPSN:10K OHM,5%,0.25W	01121	CB1035
A11R22	315-0302-00	B010190		RES.,FXD,CMPSN:3K OHM,5%,0.25W	01121	CB3025
A11R23	317-0101-00	XB010190		RES.,FXD,CMPSN:100 OHM,5%,0.125W	01121	BB1015
A11R26	315-0562-00			RES.,FXD,CMPSN:5.6K OHM,5%,0.25W	01121	CB5625
A11R27	315-0202-00			RES.,FXD,CMPSN:2K OHM,5%,0.25W	01121	CB2025
A11R28	315-0202-00			RES.,FXD,CMPSN:2K OHM,5%,0.25W	01121	CB2025
A11R29	315-0622-00			RES.,FXD,CMPSN:6.2K OHM,5%,0.25W	01121	CB6225
A11R34	315-0303-00			RES.,FXD,CMPSN:30K OHM,5%,0.25W	01121	CB3035
A11R36	315-0202-00			RES.,FXD,CMPSN:2K OHM,5%,0.25W	01121	CB2025
A11R37	315-0472-00			RES.,FXD,CMPSN:4.7K OHM,5%,0.25W	01121	CB4725
A11R42	321-0191-00			RES.,FXD,FILM:953 OHM,1%,0.125W	91637	MFF1816G953R0F
A11R44	315-0510-00			RES.,FXD,CMPSN:51 OHM,5%,0.25W	01121	CB5105
A11R46	315-0510-00			RES.,FXD,CMPSN:51 OHM,5%,0.25W	01121	CB5105
A11R47	315-0510-00			RES.,FXD,CMPSN:51 OHM,5%,0.25W	01121	CB5105
A11R52	321-0260-00			RES.,FXD,FILM:4.99K OHM,1%,0.125W	91637	MFF1816G49900F
A11R53	321-0260-00			RES.,FXD,FILM:4.99K OHM,1%,0.125W	91637	MFF1816G49900F
A11R61	315-0303-00			RES.,FXD,CMPSN:30K OHM,5%,0.25W	01121	CB3035
A11R62	315-0302-00			RES.,FXD,CMPSN:3K OHM,5%,0.25W	01121	CB3025
A11R63	315-0473-00			RES.,FXD,CMPSN:47K OHM,5%,0.25W	01121	CB4735
A11R64	315-0473-00			RES.,FXD,CMPSN:47K OHM,5%,0.25W	01121	CB4735
A11R65	315-0752-00			RES.,FXD,CMPSN:7.5K OHM,5%,0.25W	01121	CB7525
A11R66	315-0153-00			RES.,FXD,CMPSN:15K OHM,5%,0.25W	01121	CB1535
A11R67	315-0153-00			RES.,FXD,CMPSN:15K OHM,5%,0.25W	01121	CB1535
A11R68	315-0472-00			RES.,FXD,CMPSN:4.7K OHM,5%,0.25W	01121	CB4725
A11R74	315-0510-00			RES.,FXD,CMPSN:51 OHM,5%,0.25W	01121	CB5105
A11R77	315-0202-00			RES.,FXD,CMPSN:2K OHM,5%,0.25W	01121	CB2025
A11R81	315-0473-00			RES.,FXD,CMPSN:47K OHM,5%,0.25W	01121	CB4735
A11R83	321-0239-00			RES.,FXD,FILM:3.01K OHM,1%,0.125W	91637	MFF1816G30100F
A11R89	315-0202-00			RES.,FXD,CMPSN:2K OHM,5%,0.25W	01121	CB2025
A11R90	315-0202-00			RES.,FXD,CMPSN:2K OHM,5%,0.25W	01121	CB2025
A11R102	321-0191-00			RES.,FXD,FILM:953 OHM,1%,0.125W	91637	MFF1816G953R0F
A11R104	315-0510-00			RES.,FXD,CMPSN:51 OHM,5%,0.25W	01121	CB5105
A11R105	315-0303-00			RES.,FXD,CMPSN:30K OHM,5%,0.25W	01121	CB3035
A11R106	315-0510-00			RES.,FXD,CMPSN:51 OHM,5%,0.25W	01121	CB5105
A11R107	315-0510-00			RES.,FXD,CMPSN:51 OHM,5%,0.25W	01121	CB5105
A11R108	315-0623-00			RES.,FXD,CMPSN:62K OHM,5%,0.25W	01121	CB6235
A11R111	315-0243-00			RES.,FXD,CMPSN:24K OHM,5%,0.25W	01121	CB2435
A11R112	315-0105-00			RES.,FXD,CMPSN:1M OHM,5%,0.25W	01121	CB1055
A11R113	315-0152-00			RES.,FXD,CMPSN:1.5K OHM,5%,0.25W	01121	CB1525
A11R116	315-0104-00			RES.,FXD,CMPSN:100K OHM,5%,0.25W	01121	CB1045
A11R117	315-0152-00			RES.,FXD,CMPSN:1.5K OHM,5%,0.25W	01121	CB1525
A11R135	315-0623-00			RES.,FXD,CMPSN:62K OHM,5%,0.25W	01121	CB6235
A11R136	315-0472-00			RES.,FXD,CMPSN:4.7K OHM,5%,0.25W	01121	CB4725
A11R137	315-0102-00			RES.,FXD,CMPSN:1K OHM,5%,0.25W	01121	CB1025
A11R138	315-0202-00			RES.,FXD,CMPSN:2K OHM,5%,0.25W	01121	CB2025

http://manoman.sqhill.com

Component No.	Tektronix Part No.	Serial/Model No. Eff	Dscont	Name & Description	Mfr Code	Mfr Part Number
A11R139	315-0202-00			RES.,FXD,CMPSN:2K OHM,5%,0.25W	01121	CB2025
A11R140	315-0622-00			RES.,FXD,CMPSN:6.2K OHM,5%,0.25W	01121	CB6225
A11R143	307-0108-00			RES.,FXD,CMPSN:6.8 OHM,5%,0.25W	80009	307-0108-00
A11R145	315-0562-00			RES.,FXD,CMPSN:5.6K OHM,5%,0.25W	01121	CB5625
A11R146	315-0911-00			RES.,FXD,CMPSN:910 OHM,5%,0.25W	01121	CB9115
A11R147	315-0911-00			RES.,FXD,CMPSN:910 OHM,5%,0.25W	01121	CB9115
A11R148	315-0752-00			RES.,FXD,CMPSN:7.5K OHM,5%,0.25W	01121	CB7525
A11R156	315-0561-00			RES.,FXD,CMPSN:560 OHM,5%,0.25W	01121	CB5615
A11R158	315-0561-00			RES.,FXD,CMPSN:560 OHM,5%,0.25W	01121	CB5615
A11R159	315-0561-00			RES.,FXD,CMPSN:560 OHM,5%,0.25W	01121	CB5615
A11R160	307-0108-00			RES.,FXD,CMPSN:6.8 OHM,5%,0.25W	80009	307-0108-00
A11R161	315-0561-00			RES.,FXD,CMPSN:560 OHM,5%,0.25W	01121	CB5615
A11R162	315-0561-00			RES.,FXD,CMPSN:560 OHM,5%,0.25W	01121	CB5615
A11R163	321-0231-00			RES.,FXD,FILM:2.49K OHM,1%,0.125W	91637	MFF1816G24900F
A11R164	321-0231-00			RES.,FXD,FILM:2.49K OHM,1%,0.125W	91637	MFF1816G24900F
A11R165	315-0132-00			RES.,FXD,CMPSN:1.3K OHM,5%,0.25W	01121	CB1325
A11R166	315-0132-00			RES.,FXD,CMPSN:1.3K OHM,5%,0.25W	01121	CB1325
A11R167	315-0132-00			RES.,FXD,CMPSN:1.3K OHM,5%,0.25W	01121	CB1325
A11R176	315-0153-00			RES.,FXD,CMPSN:15K OHM,5%,0.25W	01121	CB1535
A11R178	315-0153-00			RES.,FXD,CMPSN:15K OHM,5%,0.25W	01121	CB1535
A11R179	315-0153-00			RES.,FXD,CMPSN:15K OHM,5%,0.25W	01121	CB1535
A11R181	315-0153-00			RES.,FXD,CMPSN:15K OHM,5%,0.25W	01121	CB1535
A11R182	315-0153-00			RES.,FXD,CMPSN:15K OHM,5%,0.25W	01121	CB1535
A11U32	156-0381-02			MICROCIRCUIT,DI:QUAD 2-INP EXCL OR GATE	01295	SN74LS86
A11U33	156-0798-02			MICROCIRCUIT,DI:DUAL 14 TO 1 LINE SEL/MUX	01295	SN74LS153
A11U60	156-0383-02			MICROCIRCUIT,DI:QUAD 2-INP NOR GATE	01295	SN74LS02
A11U65	156-0259-00			MICROCIRCUIT,LI:5 TRANSISTOR ARRAY	80009	156-0259-00
A11U143	156-0798-02			MICROCIRCUIT,DI:DUAL 14 TO 1 LINE SEL/MUX	01295	SN74LS153
A11U161	156-0852-02			MICROCIRCUIT,DI:HEX DRVR W/3 STATE INP	80009	156-0852-02

http://manoman.sqhill.com

Component No.	Tektronix Part No.	Serial/Model No. Eff	Dscont	Name & Description	Mfr Code	Mfr Part Number
A12	----- -----			CKT BOARD ASSY:CONTROL RECT		
A12C52	283-0003-00			CAP.,FXD,CER DI:0.01UF,+80-20%,150V	91418	SP103Z151-4R9
A12C54	290-0573-00			CAP.,FXD,ELCTLT:2.7UF,20%,50V	56289	196D275X0050JA1
A12C55	283-0028-00			CAP.,FXD,CER DI:0.0022UF,20%,50V	56289	19C606
A12C64	290-0263-00			CAP.,FXD,ELCTLT:2.7UF,15V	56289	162D275X9015CD2
A12C66	283-0003-00			CAP.,FXD,CER DI:0.01UF,+80-20%,150V	91418	SP103Z151-4R9
A12C67	290-0523-00			CAP.,FXD,ELCTLT:2.2UF,20%,20V	56289	196D225X0020HA1
A12C70	290-0534-00			CAP.,FXD,ELCTLT:1UF,20%,35V	56289	196D105X0035HA1
A12C71	290-0534-00			CAP.,FXD,ELCTLT:1UF,20%,35V	56289	196D105X0035HA1
A12C74	283-0594-00			CAP.,FXD,MICA D:0.001UF,1%,100V	00853	D151F102F0
A12C77	283-0060-00			CAP.,FXD,CER DI:100PF,5%,200V	72982	855-535U2J101J
A12C78	283-0060-00			CAP.,FXD,CER DI:100PF,5%,200V	72982	855-535U2J101J
A12C80	283-0080-00			CAP.,FXD,CER DI:0.022UF,+80-20%,25V	56289	19C611
A12C86	290-0580-00			CAP.,FXD,ELCTLT:0.27UF,20%,50V	56289	196D274X0050HA1
A12C90	290-0778-00			CAP.,FXD,ELCTLT:1UF,+50-10%,50V	54473	ECE-A50N1
A12C92	285-1123-00			CAP.,FXD,PLSTC:1UF,20%,200V	50558	ME2-2190
A12C94	285-0543-00	B010100	B010150	CAP.,FXD,PLSTC:0.0022UF,20%,400V	56289	410P22204
A12C94	285-0695-00	B010151		CAP.,FXD,PLSTC:0.01UF,10%,200V	56289	292P10392
A12C121	285-0892-00			CAP.,FXD,PLSTC:0.22UF,10%,200V	56289	LP66A1C224K002
A12C124	290-0758-00			CAP.,FXD,ELCTLT:2.2UF,+50-10%,160V	56289	502D227
A12C125	290-0758-00			CAP.,FXD,ELCTLT:2.2UF,+50-10%,160V	56289	502D227
A12C132	290-0768-00			CAP.,FXD,ELCTLT:10UF,+50-10%,100V	54473	ECE-A100V10L
A12C133	290-0768-00			CAP.,FXD,ELCTLT:10UF,+50-10%,100V	54473	ECE-A100V10L
A12C134	290-0768-00			CAP.,FXD,ELCTLT:10UF,+50-10%,100V	54473	ECE-A100V10L
A12C135	290-0768-00			CAP.,FXD,ELCTLT:10UF,+50-10%,100V	54473	ECE-A100V10L
A12C142	290-0772-00			CAP.,FXD,ELCTLT:330UF,+50-10%,25V	0000L	ECE-B25Z330
A12C143	290-0770-00			CAP.,FXD,ELCTLT:100UF,+50-10%,25V	56289	502D230
A12C144	290-0772-00			CAP.,FXD,ELCTLT:330UF,+50-10%,25V	0000L	ECE-B25Z330
A12C145	290-0770-00			CAP.,FXD,ELCTLT:100UF,+50-10%,25V	56289	502D230
A12C152	290-0771-00			CAP.,FXD,ELCTLT:220UF,+50-10%,10VDC	54473	ECE-A10V220L
A12C153	290-0771-00			CAP.,FXD,ELCTLT:220UF,+50-10%,10VDC	54473	ECE-A10V220L
A12C154	290-0754-00			CAP.,FXD,ELCTLT:2200UF,+75%-10%,10VDC	56289	432D222010AA2
A12C155	290-0773-00			CAP.,FXD,ELCTLT:1000UF,+50-10%,10V	0000L	ECE-B10Z1000
A12C156	290-0771-00			CAP.,FXD,ELCTLT:220UF,+50-10%,10VDC	54473	ECE-A10V220L
A12C172	290-0746-00			CAP.,FXD,ELCTLT:47UF,+50-10%,16V	55680	16U-47V-T
A12C179	283-0177-00			CAP.,FXD,CER DI:1UF,+80-20%,25V	56289	273C5
A12C183	283-0111-00			CAP.,FXD,CER DI:0.1UF,20%,50V	72982	8121-N088Z5U104M
A12CR52	152-0333-00			SEMICOND DEVICE:SILICON,55V,200MA	07263	FDH-6012
A12CR59	152-0333-00			SEMICOND DEVICE:SILICON,55V,200MA	07263	FDH-6012
A12CR65	152-0141-02			SEMICOND DEVICE:SILICON,30V,150MA	01295	1N4152R
A12CR66	152-0141-02			SEMICOND DEVICE:SILICON,30V,150MA	01295	1N4152R
A12CR73	152-0333-00			SEMICOND DEVICE:SILICON,55V,200MA	07263	FDH-6012
A12CR74	152-0333-00			SEMICOND DEVICE:SILICON,55V,200MA	07263	FDH-6012
A12CR75	152-0333-00			SEMICOND DEVICE:SILICON,55V,200MA	07263	FDH-6012
A12CR76	152-0333-00			SEMICOND DEVICE:SILICON,55V,200MA	07263	FDH-6012
A12CR81	152-0333-00			SEMICOND DEVICE:SILICON,55V,200MA	07263	FDH-6012
A12CR82	152-0333-00			SEMICOND DEVICE:SILICON,55V,200MA	07263	FDH-6012
A12CR83	152-0333-00			SEMICOND DEVICE:SILICON,55V,200MA	07263	FDH-6012
A12CR84	152-0333-00			SEMICOND DEVICE:SILICON,55V,200MA	07263	FDH-6012
A12CR90	152-0141-02			SEMICOND DEVICE:SILICON,30V,150MA	01295	1N4152R
A12CR120	152-0242-00			SEMICOND DEVICE:SILICON,225V,200MA	07263	FDH5004
A12CR121	152-0242-00			SEMICOND DEVICE:SILICON,225V,200MA	07263	FDH5004
A12CR122	152-0242-00			SEMICOND DEVICE:SILICON,225V,200MA	07263	FDH5004
A12CR123	152-0242-00			SEMICOND DEVICE:SILICON,225V,200MA	07263	FDH5004
A12CR124	152-0242-00			SEMICOND DEVICE:SILICON,225V,200MA	07263	FDH5004
A12CR125	152-0242-00			SEMICOND DEVICE:SILICON,225V,200MA	07263	FDH5004
A12CR127	152-0242-00			SEMICOND DEVICE:SILICON,225V,200MA	07263	FDH5004

http://manoman.sqhill.com

Component No.	Tektronix Part No.	Serial/Model No. Eff	Dscont	Name & Description	Mfr Code	Mfr Part Number
A12CR130	152-0586-00			SEMICOND DEVICE:SILICON,600V,500MA	14936	RGP10J
A12CR131	152-0586-00			SEMICOND DEVICE:SILICON,600V,500MA	14936	RGP10J
A12CR132	152-0586-00			SEMICOND DEVICE:SILICON,600V,500MA	14936	RGP10J
A12CR133	152-0586-00			SEMICOND DEVICE:SILICON,600V,500MA	14936	RGP10J
A12CR140	152-0397-00			SEMICOND DEVICE:SILICON,50V,12A	80009	152-0397-00
A12CR141	152-0397-00			SEMICOND DEVICE:SILICON,50V,12A	80009	152-0397-00
A12CR142	152-0397-00			SEMICOND DEVICE:SILICON,50V,12A	80009	152-0397-00
A12CR143	152-0397-00			SEMICOND DEVICE:SILICON,50V,12A	80009	152-0397-00
A12CR150	152-0586-00			SEMICOND DEVICE:SILICON,600V,500MA	14936	RGP10J
A12CR151	152-0692-00			SEMICOND DEVICE:DUAL RECT,SI,30A,20V	83003	SKS017
A12CR153	152-0586-00			SEMICOND DEVICE:SILICON,600V,500MA	14936	RGP10J
A12CR161	152-0008-00			SEMICOND DEVICE:GERMANIUM,75V,60MA	14433	G1409
A12CR171	152-0141-02			SEMICOND DEVICE:SILICON,30V,150MA	01295	1N4152R
A12CR183	152-0141-02			SEMICOND DEVICE:SILICON,30V,150MA	01295	1N4152R
A12L132	108-0473-00			COIL,RF:150UH	80009	108-0473-00
A12L134	108-0473-00			COIL,RF:150UH	80009	108-0473-00
A12L142	108-0680-00			COIL,RF:27UH	80009	108-0680-00
A12L144	108-0680-00			COIL,RF:27UH	80009	108-0680-00
A12L152	108-0473-00			COIL,RF:150UH	80009	108-0473-00
A12L154	108-0556-00			COIL,RF:12UH	80009	108-0556-00
A12L156	108-0337-00			COIL,RF:25UH	80009	108-0337-00
A12Q52	151-0302-00			TRANSISTOR:SILICON,NPN	07263	S038487
A12Q54	151-0273-00			TRANSISTOR:SILICON,NPN	80009	151-0273-00
A12Q162	151-0190-05			TRANSISTOR:SILICON,NPN	80009	151-0190-05
A12Q171	151-0190-05			TRANSISTOR:SILICON,NPN	80009	151-0190-05
A12Q173	151-0188-00			TRANSISTOR:SILICON,PNP	04713	SPS6868K
A12Q177	151-0188-00			TRANSISTOR:SILICON,PNP	04713	SPS6868K
A12R52	315-0512-00			RES.,FXD,CMPSN:5.1K OHM,5%,0.25W	01121	CB5125
A12R54	315-0753-00			RES.,FXD,CMPSN:75K OHM,5%,0.25W	01121	CB7535
A12R55	315-0201-00	XB010151		RES.,FXD,CMPSN:200 OHM,5%,0.25W	01121	CB2015
A12R59	315-0562-00			RES.,FXD,CMPSN:5.6K OHM,5%,0.25W	01121	CB5625
A12R60	315-0224-00			RES.,FXD,CMPSN:220K OHM,5%,0.25W	01121	CB2245
A12R61	315-0123-00			RES.,FXD,CMPSN:12K OHM,5%,0.25W	01121	CB1235
A12R62	315-0301-00			RES.,FXD,CMPSN:300 OHM,5%,0.25W	01121	CB3015
A12R63	315-0470-00			RES.,FXD,CMPSN:47 OHM,5%,0.25W	01121	CB4705
A12R64	315-0102-00			RES.,FXD,CMPSN:1K OHM,5%,0.25W	01121	CB1025
A12R66	315-0202-00			RES.,FXD,CMPSN:2K OHM,5%,0.25W	01121	CB2025
A12R67	315-0154-00			RES.,FXD,CMPSN:150K OHM,5%,0.25W	01121	CB1545
A12R70	315-0560-00			RES.,FXD,CMPSN:56 OHM,5%,0.25W	01121	CB5605
A12R71	315-0560-00			RES.,FXD,CMPSN:56 OHM,5%,0.25W	01121	CB5605
A12R74	321-0346-00			RES.,FXD,FILM:39.2K OHM,1%,0.125W	91637	MFF1816G39201F
A12R80	315-0471-00			RES.,FXD,CMPSN:470 OHM,5%,0.25W	01121	CB4715
A12R81	321-0334-00			RES.,FXD,FILM:29.4K OHM,1%,0.125W	91637	MFF1816G29401F
A12R82	321-0340-00			RES.,FXD,FILM:34K OHM,1%,0.125W	91637	MFF1816G34001F
A12R83	321-0193-00			RES.,FXD,FILM:1K OHM,1%,0.125W	91637	MFF1816G10000F
A12R84	321-0005-00			RES.,FXD,FILM:11 OHM,1%,0.125W	75042	CEAT0-11R0F
A12R86	321-0284-00			RES.,FXD,FILM:8.87K OHM,1%,0.125W	91637	MFF1816G88700F
A12R87	321-0283-00			RES.,FXD,FILM:8.66K OHM,1%,0.125W	91637	MFF1816G86600F
A12R88	315-0122-00			RES.,FXD,CMPSN:1.2K OHM,5%,0.25W	01121	CB1225
A12R90	315-0272-00			RES.,FXD,CMPSN:2.7K OHM,5%,0.25W	01121	CB2725
A12R92	315-0105-00			RES.,FXD,CMPSN:1M OHM,5%,0.25W	01121	CB1055
A12R93	311-1239-00			RES.,VAR,NONWIR:2.5K OHM,10%,0.50W	73138	72-26-0
A12R94	315-0203-00			RES.,FXD,CMPSN:20K OHM,5%,0.25W	01121	CB2035
A12R95	321-0419-00			RES.,FXD,FILM:226K OHM,1%,0.125W	91637	MFF1816G22602F
A12R120	315-0150-00			RES.,FXD,CMPSN:15 OHM,5%,0.25W	01121	CB1505
A12R121	315-0101-00			RES.,FXD,CMPSN:100 OHM,5%,0.25W	01121	CB1015
A12R127	301-0391-00			RES.,FXD,CMPSN:390 OHM,5%,0.50W	01121	EB3915

http://manoman.sqhill.com

Component No.	Tektronix Part No.	Serial/Model No. Eff	Dscont	Name & Description	Mfr Code	Mfr Part Number
A12R161	315-0473-00			RES.,FXD,CMPSN:47K OHM,5%,0.25W	01121	CB4735
A12R162	315-0472-00			RES.,FXD,CMPSN:4.7K OHM,5%,0.25W	01121	CB4725
A12R170	315-0100-00	XB010151		RES.,FXD,CMPSN:10 OHM,5%,0.25W	01121	CB1005
A12R171	315-0274-00			RES.,FXD,CMPSN:270K OHM,5%,0.25W	01121	CB2745
A12R172	315-0474-00			RES.,FXD,CMPSN:470K OHM,5%,0.25W	01121	CB4745
A12R173	315-0272-00			RES.,FXD,CMPSN:2.7K OHM,5%,0.25W	01121	CB2725
A12R174	315-0182-00			RES.,FXD,CMPSN:1.8K OHM,5%,0.25W	01121	CB1825
A12R176	315-0203-00			RES.,FXD,CMPSN:20K OHM,5%,0.25W	01121	CB2035
A12R177	315-0203-00			RES.,FXD,CMPSN:20K OHM,5%,0.25W	01121	CB2035
A12R179	315-0472-00			RES.,FXD,CMPSN:4.7K OHM,5%,0.25W	01121	CB4725
A12R181	315-0334-00			RES.,FXD,CMPSN:330K OHM,5%,0.25W	01121	CB3345
A12R182	315-0754-00			RES.,FXD,CMPSN:750K OHM,5%,0.25W	01121	CB7545
A12TP126	214-0579-00			TERM,TEST POINT:BRS CD PL	80009	214-0579-00
A12U75	155-0067-02			MICROCIRCUIT,DI:ML,POWER SUPPLY REGULATOR	80009	155-0067-02
A12U179	156-0481-02			MICROCIRCUIT,DI:TRIPLE 3 INP & GATE	27014	DM74LS11NA+
A12VR52	152-0590-00			SEMICOND DEVICE:ZENER,18V,5% AT 7MA	80009	152-0590-00
A12VR72	152-0243-00			SEMICOND DEVICE:ZENER,0.4W,15V,5%	14552	TD3810983
A12VR88	152-0212-00			SEMICOND DEVICE:ZENER,0.5W,9V,5%	04713	SZ50646RL

http://manoman.sqhill.com

Component No.	Tektronix Part No.	Serial/Model No. Eff	Dscont	Name & Description	Mfr Code	Mfr Part Number
A13	----- -----			CKT BOARD ASSY:TRIGGER SELECT		
A13C509	283-0176-00			CAP.,FXD,CER DI:0.0022UF,20%,50V	72982	8121B058X7R0222M
A13C513	283-0176-00			CAP.,FXD,CER DI:0.0022UF,20%,50V	72982	8121B058X7R0222M
A13C566	283-0191-00			CAP.,FXD,CER DI:0.022UF,20%,50V	72982	8121N075Z5U0223M
A13C567	283-0176-00			CAP.,FXD,CER DI:0.0022UF,20%,50V	72982	8121B058X7R0222M
A13C569	283-0176-00			CAP.,FXD,CER DI:0.0022UF,20%,50V	72982	8121B058X7R0222M
A13C573	283-0176-00			CAP.,FXD,CER DI:0.0022UF,20%,50V	72982	8121B058X7R0222M
A13C588	283-0114-00			CAP.,FXD,CER DI:0.0015UF,5%,200V	72982	805-509B152J
A13C593	283-0157-00			CAP.,FXD,CER DI:7PF,5%,500V	72982	8111B064C0H0709J
A13C596	281-0611-00			CAP.,FXD,CER DI:2.7PF,+/-0.25PF,200V	04222	7040-C0J-2R7C
	----- -----			(NOMINAL VALUE, SELECTED)		
A13C598	283-0114-00			CAP.,FXD,CER DI:0.0015UF,5%,200V	72982	805-509B152J
A13C609	283-0176-00			CAP.,FXD,CER DI:0.0022UF,20%,50V	72982	8121B058X7R0222M
A13C613	283-0176-00			CAP.,FXD,CER DI:0.0022UF,20%,50V	72982	8121B058X7R0222M
A13C648	283-0051-00			CAP.,FXD,CER DI:0.0033UF,5%,100V	72982	8131N145C0G0332J
A13C669	283-0176-00			CAP.,FXD,CER DI:0.0022UF,20%,50V	72982	8121B058X7R0222M
A13C671	283-0176-00			CAP.,FXD,CER DI:0.0022UF,20%,50V	72982	8121B058X7R0222M
A13C673	283-0176-00			CAP.,FXD,CER DI:0.0022UF,20%,50V	72982	8121B058X7R0222M
A13C688	283-0114-00			CAP.,FXD,CER DI:0.0015UF,5%,200V	72982	805-509B152J
A13C693	283-0157-00			CAP.,FXD,CER DI:7PF,5%,500V	72982	8111B064C0H0709J
A13C696	281-0618-00			CAP.,FXD,CER DI:4.7PF,+/-0.5PF,200V	59660	374001C0H0479D
	----- -----			(NOMINAL VALUE, SELECTED)		
A13C698	283-0114-00			CAP.,FXD,CER DI:0.0015UF,5%,200V	72982	805-509B152J
A13CR521	152-0141-02			SEMICOND DEVICE:SILICON,30V,150MA	01295	1N4152R
A13CR522	152-0141-02			SEMICOND DEVICE:SILICON,30V,150MA	01295	1N4152R
A13CR526	152-0141-02			SEMICOND DEVICE:SILICON,30V,150MA	01295	1N4152R
A13CR548	152-0141-02			SEMICOND DEVICE:SILICON,30V,150MA	01295	1N4152R
A13CR549	152-0141-02			SEMICOND DEVICE:SILICON,30V,150MA	01295	1N4152R
A13CR621	152-0141-02			SEMICOND DEVICE:SILICON,30V,150MA	01295	1N4152R
A13CR622	152-0141-02			SEMICOND DEVICE:SILICON,30V,150MA	01295	1N4152R
A13CR626	152-0141-02			SEMICOND DEVICE:SILICON,30V,150MA	01295	1N4152R
A13LR531	108-0729-00			COIL,RF:195NH	80009	108-0729-00
A13LR534	108-0729-00			COIL,RF:195NH	80009	108-0729-00
A13LR536	108-0729-00			COIL,RF:195NH	80009	108-0729-00
A13LR539	108-0729-00			COIL,RF:195NH	80009	108-0729-00
A13LR631	108-0729-00			COIL,RF:195NH	80009	108-0729-00
A13LR634	108-0729-00			COIL,RF:195NH	80009	108-0729-00
A13LR636	108-0729-00			COIL,RF:195NH	80009	108-0729-00
A13LR639	108-0729-00			COIL,RF:195NH	80009	108-0729-00
A13Q524	151-0341-00			TRANSISTOR:SILICON,NPN	07263	S040065
A13Q548	151-0434-00			TRANSISTOR:SILICON,PNP	04713	SS7144
A13Q558	151-0434-00			TRANSISTOR:SILICON,PNP	04713	SS7144
A13Q588	151-0294-00			TRANSISTOR:SILICON,PNP	80009	151-0294-00
A13Q598	151-0294-00			TRANSISTOR:SILICON,PNP	80009	151-0294-00
A13Q624	151-0341-00			TRANSISTOR:SILICON,NPN	07263	S040065
A13Q688	151-0294-00			TRANSISTOR:SILICON,PNP	80009	151-0294-00
A13Q698	151-0294-00			TRANSISTOR:SILICON,PNP	80009	151-0294-00
A13R502	321-0022-00			RES.,FXD,FILM:16.5 OHM,1%,0.125W	91637	MFF1816G16R50F
A13R503	321-0022-00			RES.,FXD,FILM:16.5 OHM,1%,0.125W	91637	MFF1816G16R50F
A13R505	321-0070-00			RES.,FXD,FILM:52.3 OHM,1%,0.125W	16299	NA55D52R3F
A13R506	321-0138-00			RES.,FXD,FILM:267 OHM,1%,0.125W	91637	MFF1816G267R0F
A13R507	321-0064-00			RES.,FXD,FILM:45.3 OHM,1%,0.125W	91637	MFF1816G45R30F
A13R509	323-0138-00			RES.,FXD,FILM:267 OHM,1%,0.50W	75042	CECT0-2670F
A13R511	317-0103-00			RES.,FXD,CMPSN:10K OHM,5%,0.125W	01121	BB1035
A13R512	321-0022-00			RES.,FXD,FILM:16.5 OHM,1%,0.125W	91637	MFF1816G16R50F
A13R513	321-0022-00			RES.,FXD,FILM:16.5 OHM,1%,0.125W	91637	MFF1816G16R50F
A13R515	321-0070-00			RES.,FXD,FILM:52.3 OHM,1%,0.125W	16299	NA55D52R3F

http://manoman.sqhill.com

Component No.	Tektronix Part No.	Serial/Model No. Eff	Dscont	Name & Description	Mfr Code	Mfr Part Number
A13R516	321-0138-00			RES.,FXD,FILM:267 OHM,1%,0.125W	91637	MFF1816G267R0F
A13R517	321-0064-00			RES.,FXD,FILM:45.3 OHM,1%,0.125W	91637	MFF1816G45R30F
A13R521	315-0511-00			RES.,FXD,CMPSN:510 OHM,5%,0.25W	01121	CB5115
A13R522	315-0272-00			RES.,FXD,CMPSN:2.7K OHM,5%,0.25W	01121	CB2725
A13R523	315-0273-00			RES.,FXD,CMPSN:27K OHM,5%,0.25W	01121	CB2735
A13R524	315-0512-00			RES.,FXD,CMPSN:5.1K OHM,5%,0.25W	01121	CB5125
A13R526	321-0241-00			RES.,FXD,FILM:3.16K OHM,1%,0.125W	91637	MFF1816G31600F
A13R527	315-0912-00			RES.,FXD,CMPSN:9.1K OHM,5%,0.25W	01121	CB9125
A13R532	315-0472-00			RES.,FXD,CMPSN:4.7K OHM,5%,0.25W	01121	CB4725
A13R533	321-0296-00			RES.,FXD,FILM:11.8K OHM,1%,0.125W	91637	MFF1816G11801F
A13R537	321-0296-00			RES.,FXD,FILM:11.8K OHM,1%,0.125W	91637	MFF1816G11801F
A13R538	321-0296-00			RES.,FXD,FILM:11.8K OHM,1%,0.125W	91637	MFF1816G11801F
A13R541	321-0144-00			RES.,FXD,FILM:309 OHM,1%,0.125W	91637	MFF1816G309R0F
A13R542	321-0135-00			RES.,FXD,FILM:249 OHM,1%,0.125W	91637	MFF1816G249R0F
A13R543	317-0820-00			RES.,FXD,CMPSN:82 OHM,5%,0.125W	01121	BB8205
A13R544	317-0820-00			RES.,FXD,CMPSN:82 OHM,5%,0.125W	01121	BB8205
A13R545	321-0065-00			RES.,FXD,FILM:46.4 OHM,1%,0.125W	91637	MFF1816G46R40F
A13R546	323-0119-00			RES.,FXD,FILM:169 OHM,1%,0.50W	75042	CECT0-1690F
A13R547	311-1007-00			RES.,VAR,NONWIR:20 OHM,20%,0.50W	73138	82-38-1
A13R548	321-0221-00			RES.,FXD,FILM:1.96K OHM,1%,0.125W	91637	MFF1816G19600F
A13R549	322-0219-00			RES.,FXD,FILM:1.87K OHM,1%,0.25W	75042	CEBT0-1871F
A13R552	315-0472-00			RES.,FXD,CMPSN:4.7K OHM,5%,0.25W	01121	CB4725
A13R553	315-0511-00			RES.,FXD,CMPSN:510 OHM,5%,0.25W	01121	CB5115
A13R555	321-0065-00			RES.,FXD,FILM:46.4 OHM,1%,0.125W	91637	MFF1816G46R40F
A13R556	323-0119-00			RES.,FXD,FILM:169 OHM,1%,0.50W	75042	CECT0-1690F
A13R558	315-0151-00			RES.,FXD,CMPSN:150 OHM,5%,0.25W	01121	CB1515
A13R562	321-0022-00			RES.,FXD,FILM:16.5 OHM,1%,0.125W	91637	MFF1816G16R50F
A13R563	321-0022-00			RES.,FXD,FILM:16.5 OHM,1%,0.125W	91637	MFF1816G16R50F
A13R565	321-0070-00			RES.,FXD,FILM:52.3 OHM,1%,0.125W	16299	NA55D52R3F
A13R566	321-0138-00			RES.,FXD,FILM:267 OHM,1%,0.125W	91637	MFF1816G267R0F
A13R567	321-0064-00			RES.,FXD,FILM:45.3 OHM,1%,0.125W	91637	MFF1816G45R30F
A13R569	323-0138-00			RES.,FXD,FILM:267 OHM,1%,0.50W	75042	CECT0-2670F
A13R571	317-0103-00			RES.,FXD,CMPSN:10K OHM,5%,0.125W	01121	BB1035
A13R572	321-0022-00			RES.,FXD,FILM:16.5 OHM,1%,0.125W	91637	MFF1816G16R50F
A13R573	321-0022-00			RES.,FXD,FILM:16.5 OHM,1%,0.125W	91637	MFF1816G16R50F
A13R575	321-0070-00			RES.,FXD,FILM:52.3 OHM,1%,0.125W	16299	NA55D52R3F
A13R576	321-0138-00			RES.,FXD,FILM:267 OHM,1%,0.125W	91637	MFF1816G267R0F
A13R577	321-0064-00			RES.,FXD,FILM:45.3 OHM,1%,0.125W	91637	MFF1816G45R30F
A13R579	315-0103-00			RES.,FXD,CMPSN:10K OHM,5%,0.25W	01121	CB1035
A13R581	323-0165-00			RES.,FXD,FILM:511 OHM,1%,0.5W	24546	NA65D5110F
A13R582	317-0150-00			RES.,FXD,CMPSN:15 OHM,5%,0.125W	01121	BB1505
A13R583	321-0066-00			RES.,FXD,FILM:47.5 OHM,1%,0.125W	91637	MFF1816G47R50F
A13R584	321-0075-00			RES.,FXD,FILM:59 OHM,1%,0.125W	91637	MFF1816G59R00F
A13R585	323-0193-00			RES.,FXD,FILM:1K OHM,1%,0.50W	75042	CECT0-1001F
A13R586	311-0605-00			RES.,VAR,NONWIR:TRMR,200 OHM,0.5W	73138	82-23-2
A13R587	315-0510-00			RES.,FXD,CMPSN:51 OHM,5%,0.25W	01121	CB5105
A13R588	317-0151-00			RES.,FXD,CMPSN:150 OHM,5%,0.125W	01121	BB1515
A13R589	311-1261-00			RES.,VAR,NONWIR:500 OHM,10%,0.50W	32997	3329P-L58-501
A13R591	323-0165-00			RES.,FXD,FILM:511 OHM,1%,0.5W	24546	NA65D5110F
A13R592	317-0150-00			RES.,FXD,CMPSN:15 OHM,5%,0.125W	01121	BB1505
A13R593	321-0066-00			RES.,FXD,FILM:47.5 OHM,1%,0.125W	91637	MFF1816G47R50F
A13R594	321-0075-00			RES.,FXD,FILM:59 OHM,1%,0.125W	91637	MFF1816G59R00F
A13R595	323-0193-00			RES.,FXD,FILM:1K OHM,1%,0.50W	75042	CECT0-1001F
A13R596	317-0241-00			RES.,FXD,CMPSN:240 OHM,5%,0.125W	01121	BB2415
	----- -----			(NOMINAL VALUE, SELECTED)		
A13R597	315-0510-00			RES.,FXD,CMPSN:51 OHM,5%,0.25W	01121	CB5105
A13R598	317-0151-00			RES.,FXD,CMPSN:150 OHM,5%,0.125W	01121	BB1515

http://manoman.sqhill.com

Component No.	Tektronix Part No.	Serial/Model No. Eff	Dscont	Name & Description	Mfr Code	Mfr Part Number
A13R603	321-0022-00			RES.,FXD,FILM:16.5 OHM,1%,0.125W	91637	MFF1816G16R50F
A13R605	321-0070-00			RES.,FXD,FILM:52.3 OHM,1%,0.125W	16299	NA55D52R3F
A13R606	321-0138-00			RES.,FXD,FILM:267 OHM,1%,0.125W	91637	MFF1816G267R0F
A13R607	321-0064-00			RES.,FXD,FILM:45.3 OHM,1%,0.125W	91637	MFF1816G45R30F
A13R609	323-0138-00			RES.,FXD,FILM:267 OHM,1%,0.50W	75042	CECT0-2670F
A13R611	317-0103-00			RES.,FXD,CMPSN:10K OHM,5%,0.125W	01121	BB1035
A13R613	321-0022-00			RES.,FXD,FILM:16.5 OHM,1%,0.125W	91637	MFF1816G16R50F
A13R615	321-0070-00			RES.,FXD,FILM:52.3 OHM,1%,0.125W	16299	NA55D52R3F
A13R616	321-0138-00			RES.,FXD,FILM:267 OHM,1%,0.125W	91637	MFF1816G267R0F
A13R617	321-0064-00			RES.,FXD,FILM:45.3 OHM,1%,0.125W	91637	MFF1816G45R30F
A13R621	315-0511-00			RES.,FXD,CMPSN:510 OHM,5%,0.25W	01121	CB5115
A13R622	315-0272-00			RES.,FXD,CMPSN:2.7K OHM,5%,0.25W	01121	CB2725
A13R623	315-0273-00			RES.,FXD,CMPSN:27K OHM,5%,0.25W	01121	CB2735
A13R624	315-0512-00			RES.,FXD,CMPSN:5.1K OHM,5%,0.25W	01121	CB5125
A13R626	321-0241-00			RES.,FXD,FILM:3.16K OHM,1%,0.125W	91637	MFF1816G31600F
A13R627	315-0912-00			RES.,FXD,CMPSN:9.1K OHM,5%,0.25W	01121	CB9125
A13R632	315-0472-00			RES.,FXD,CMPSN:4.7K OHM,5%,0.25W	01121	CB4725
A13R633	321-0296-00			RES.,FXD,FILM:11.8K OHM,1%,0.125W	91637	MFF1816G11801F
A13R637	321-0296-00			RES.,FXD,FILM:11.8K OHM,1%,0.125W	91637	MFF1816G11801F
A13R638	321-0296-00			RES.,FXD,FILM:11.8K OHM,1%,0.125W	91637	MFF1816G11801F
A13R641	321-0144-00			RES.,FXD,FILM:309 OHM,1%,0.125W	91637	MFF1816G309R0F
A13R642	321-0135-00			RES.,FXD,FILM:249 OHM,1%,0.125W	91637	MFF1816G249R0F
A13R643	317-0510-00			RES.,FXD,CMPSN:51 OHM,5%,0.125W	01121	BB5105
A13R644	317-0510-00			RES.,FXD,CMPSN:51 OHM,5%,0.125W	01121	BB5105
A13R645	317-0510-00			RES.,FXD,CMPSN:51 OHM,5%,0.125W	01121	BB5105
A13R646	301-0620-00			RES.,FXD,CMPSN:62 OHM,5%,0.50W	01121	EB6205
A13R647	301-0510-00			RES.,FXD,CMPSN:51 OHM,5%,0.50W	01121	EB5105
A13R648	317-0510-00			RES.,FXD,CMPSN:51 OHM,5%,0.125W	01121	BB5105
A13R663	321-0022-00			RES.,FXD,FILM:16.5 OHM,1%,0.125W	91637	MFF1816G16R50F
A13R665	321-0070-00			RES.,FXD,FILM:52.3 OHM,1%,0.125W	16299	NA55D52R3F
A13R666	321-0138-00			RES.,FXD,FILM:267 OHM,1%,0.125W	91637	MFF1816G267R0F
A13R667	321-0064-00			RES.,FXD,FILM:45.3 OHM,1%,0.125W	91637	MFF1816G45R30F
A13R669	323-0138-00			RES.,FXD,FILM:267 OHM,1%,0.50W	75042	CECT0-2670F
A13R671	317-0103-00			RES.,FXD,CMPSN:10K OHM,5%,0.125W	01121	BB1035
A13R673	321-0022-00			RES.,FXD,FILM:16.5 OHM,1%,0.125W	91637	MFF1816G16R50F
A13R675	321-0070-00			RES.,FXD,FILM:52.3 OHM,1%,0.125W	16299	NA55D52R3F
A13R676	321-0138-00			RES.,FXD,FILM:267 OHM,1%,0.125W	91637	MFF1816G267R0F
A13R677	321-0064-00			RES.,FXD,FILM:45.3 OHM,1%,0.125W	91637	MFF1816G45R30F
A13R681	323-0165-00			RES.,FXD,FILM:511 OHM,1%,0.5W	24546	NA65D5110F
A13R683	321-0043-00			RES.,FXD,FILM:27.4 OHM,1%,0.125W	91637	MFF1816G27R40F
A13R684	321-0075-00			RES.,FXD,FILM:59 OHM,1%,0.125W	91637	MFF1816G59R00F
A13R685	323-0193-00			RES.,FXD,FILM:1K OHM,1%,0.50W	75042	CECT0-1001F
A13R686	311-0605-00			RES.,VAR,NONWIR:TRMR,200 OHM,0.5W	73138	82-23-2
A13R687	315-0510-00			RES.,FXD,CMPSN:51 OHM,5%,0.25W	01121	CB5105
A13R688	317-0151-00			RES.,FXD,CMPSN:150 OHM,5%,0.125W	01121	BB1515
A13R689	311-1261-00			RES.,VAR,NONWIR:500 OHM,10%,0.50W	32997	3329P-L58-501
A13R691	323-0165-00			RES.,FXD,FILM:511 OHM,1%,0.5W	24546	NA65D5110F
A13R693	321-0043-00			RES.,FXD,FILM:27.4 OHM,1%,0.125W	91637	MFF1816G27R40F
A13R694	321-0075-00			RES.,FXD,FILM:59 OHM,1%,0.125W	91637	MFF1816G59R00F
A13R695	323-0193-00			RES.,FXD,FILM:1K OHM,1%,0.50W	75042	CECT0-1001F
A13R696	317-0750-00			RES.,FXD,CMPSN:75 OHM,5%,0.125W	01121	BB7505
	----- -----			(NOMINAL VALUE, SELECTED)		
A13R697	315-0510-00			RES.,FXD,CMPSN:51 OHM,5%,0.25W	01121	CB5105
A13R698	317-0151-00			RES.,FXD,CMPSN:150 OHM,5%,0.125W	01121	BB1515
A13U520	155-0078-10			MICROCIRCUIT,LI:ML,VERTICAL AMPLIFIER	80009	155-0078-10
A13U526	156-0043-00			MICROCIRCUIT,DI:QUAD 2-INPUT POS NOR GATE	80009	156-0043-00
A13U532	156-0030-00			MICROCIRCUIT,DI:QUAD 2-INPUT NAND GATE	01295	SN7400(N OR J)

http://manoman.sqhill.com

Component No.	Tektronix Part No.	Serial/Model No. Eff	Dscont	Name & Description	Mfr Code	Mfr Part Number
A13U580	155-0078-10			MICROCIRCUIT,LI:ML,VERTICAL AMPLIFIER	80009	155-0078-10
A13U620	155-0078-10			MICROCIRCUIT,LI:ML,VERTICAL AMPLIFIER	80009	155-0078-10
A13U680	155-0078-10			MICROCIRCUIT,LI:ML,VERTICAL AMPLIFIER	80009	155-0078-10

http://manoman.sqhill.com

Component No.	Tektronix Part No.	Serial/Model No. Eff	Dscont	Name & Description	Mfr Code	Mfr Part Number
A14	----- -----			CKT BOARD ASSY:LOGIC		
A14C8	283-0672-00			CAP.,FXD,MICA D:200PF,1%,500V	00853	D155F2010F0
A14C12	283-0003-00			CAP.,FXD,CER DI:0.01UF,+80-20%,150V	91418	SP103Z151-4R9
A14C13	281-0603-00			CAP.,FXD,CER DI:39PF,5%,500V	72982	308-000C0G0390J
A14C27	281-0523-00			CAP.,FXD,CER DI:100PF,+/-20PF,500V	72982	301-000U2M0101M
A14C30	281-0629-00			CAP.,FXD,CER DI:33PF,5%,600V	04222	7027-0260
A14C32	281-0525-00			CAP.,FXD,CER DI:470PF,+/-94PF,500V	04222	7001-1364
A14C33	283-0638-00			CAP.,FXD,MICA D:130PF,1%,100V	00853	D151F131F0
A14C36	281-0603-00			CAP.,FXD,CER DI:39PF,5%,500V	72982	308-000C0G0390J
A14C37	281-0525-00			CAP.,FXD,CER DI:470PF,+/-94PF,500V	04222	7001-1364
A14C109	281-0603-00			CAP.,FXD,CER DI:39PF,5%,500V	72982	308-000C0G0390J
A14C112	281-0603-00			CAP.,FXD,CER DI:39PF,5%,500V	72982	308-000C0G0390J
A14C122	281-0523-00			CAP.,FXD,CER DI:100PF,+/-20PF,500V	72982	301-000U2M0101M
A14C124	283-0604-00			CAP.,FXD,MICA D:304PF,2%,300V	00853	D153F3040G0
A14C129	283-0604-00			CAP.,FXD,MICA D:304PF,2%,300V	00853	D153F3040G0
A14C139	281-0603-00			CAP.,FXD,CER DI:39PF,5%,500V	72982	308-000C0G0390J
A14C146	283-0003-00			CAP.,FXD,CER DI:0.01UF,+80-20%,150V	91418	SP103Z151-4R9
A14C152	283-0000-00			CAP.,FXD,CER DI:0.001UF,+100-0%,500V	59660	831-519-Z5U-102P
A14C171	283-0000-00			CAP.,FXD,CER DI:0.001UF,+100-0%,500V	59660	831-519-Z5U-102P
A14C176	283-0177-00			CAP.,FXD,CER DI:1UF,+80-20%,25V	56289	273C5
A14C190	283-0177-00			CAP.,FXD,CER DI:1UF,+80-20%,25V	56289	273C5
A14C201	290-0778-00			CAP.,FXD,ELCTLT:1UF,+50-10%,50V	54473	ECE-A50N1
A14C202	290-0755-00			CAP.,FXD,ELCTLT:100UF,+50-10%,10V	56289	502D223
A14C203	290-0778-00			CAP.,FXD,ELCTLT:1UF,+50-10%,50V	54473	ECE-A50N1
A14C206	283-0177-00			CAP.,FXD,CER DI:1UF,+80-20%,25V	56289	273C5
A14C207	290-0778-00			CAP.,FXD,ELCTLT:1UF,+50-10%,50V	54473	ECE-A50N1
A14C208	283-0177-00			CAP.,FXD,CER DI:1UF,+80-20%,25V	56289	273C5
A14CR16	152-0141-02			SEMICOND DEVICE:SILICON,30V,150MA	01295	1N4152R
A14CR17	152-0141-02			SEMICOND DEVICE:SILICON,30V,150MA	01295	1N4152R
A14CR44	152-0141-02			SEMICOND DEVICE:SILICON,30V,150MA	01295	1N4152R
A14CR45	152-0141-02			SEMICOND DEVICE:SILICON,30V,150MA	01295	1N4152R
A14CR61	152-0141-02			SEMICOND DEVICE:SILICON,30V,150MA	01295	1N4152R
A14CR62	152-0141-02			SEMICOND DEVICE:SILICON,30V,150MA	01295	1N4152R
A14CR109	152-0141-02			SEMICOND DEVICE:SILICON,30V,150MA	01295	1N4152R
A14CR112	152-0141-02			SEMICOND DEVICE:SILICON,30V,150MA	01295	1N4152R
A14CR124	152-0141-02			SEMICOND DEVICE:SILICON,30V,150MA	01295	1N4152R
A14CR129	152-0141-02			SEMICOND DEVICE:SILICON,30V,150MA	01295	1N4152R
A14CR137	152-0141-02			SEMICOND DEVICE:SILICON,30V,150MA	01295	1N4152R
A14CR139	152-0141-02			SEMICOND DEVICE:SILICON,30V,150MA	01295	1N4152R
A14CR143	152-0141-02			SEMICOND DEVICE:SILICON,30V,150MA	01295	1N4152R
A14CR146	152-0141-02			SEMICOND DEVICE:SILICON,30V,150MA	01295	1N4152R
A14CR156	152-0141-02			SEMICOND DEVICE:SILICON,30V,150MA	01295	1N4152R
A14CR159	152-0141-02			SEMICOND DEVICE:SILICON,30V,150MA	01295	1N4152R
A14CR161	152-0153-00			SEMICOND DEVICE:SILICON,15V,50MA	07263	FD7003
A14CR162	152-0153-00			SEMICOND DEVICE:SILICON,15V,50MA	07263	FD7003
A14CR176	152-0141-02			SEMICOND DEVICE:SILICON,30V,150MA	01295	1N4152R
A14CR177	152-0141-02			SEMICOND DEVICE:SILICON,30V,150MA	01295	1N4152R
A14L12	108-0245-00			COIL,RF:3.9UH	76493	B6310-1
A14L26	108-0245-00			COIL,RF:3.9UH	76493	B6310-1
A14L29	108-0245-00			COIL,RF:3.9UH	76493	B6310-1
A14L201	108-0245-00			COIL,RF:3.9UH	76493	B6310-1
A14L202	108-0245-00			COIL,RF:3.9UH	76493	B6310-1
A14L203	108-0245-00			COIL,RF:3.9UH	76493	B6310-1
A14L207	108-0245-00			COIL,RF:3.9UH	76493	B6310-1
A14LR35	108-0543-00			COIL,RF:FIXED,1.1UH	80009	108-0543-00
A14LR47	108-0543-00			COIL,RF:FIXED,1.1UH	80009	108-0543-00
A14LR57	108-0543-00			COIL,RF:FIXED,1.1UH	80009	108-0543-00

http://manoman.sqhill.com

Component No.	Tektronix Part No.	Serial/Model No. Eff	Dscont	Name & Description	Mfr Code	Mfr Part Number
A14LR84	108-0543-00			COIL,RF:FIXED,1.1UH	80009	108-0543-00
A14Q41	151-0198-00			TRANSISTOR:SILICON,NPN,SEL FROM MPS918	04713	SPS8802-1
A14Q49	151-0198-00			TRANSISTOR:SILICON,NPN,SEL FROM MPS918	04713	SPS8802-1
A14Q63	151-0188-00			TRANSISTOR:SILICON,PNP	04713	SPS6868K
A14Q67	151-0190-00			TRANSISTOR:SILICON,NPN	07263	S032677
A14Q77	151-0192-00			TRANSISTOR:SILICON,NPN,SEL FROM MPS6521	04713	SPS8801
A14Q79	151-0192-00			TRANSISTOR:SILICON,NPN,SEL FROM MPS6521	04713	SPS8801
A14Q103	151-0223-03			TRANSISTOR:NPN,SI,PRESTRESSED & TESTED	80009	151-0223-03
A14Q119	151-0223-03			TRANSISTOR:NPN,SI,PRESTRESSED & TESTED	80009	151-0223-03
A14Q127	151-0192-00			TRANSISTOR:SILICON,NPN,SEL FROM MPS6521	04713	SPS8801
A14Q132	151-0192-00			TRANSISTOR:SILICON,NPN,SEL FROM MPS6521	04713	SPS8801
A14Q136	151-0192-00			TRANSISTOR:SILICON,NPN,SEL FROM MPS6521	04713	SPS8801
A14Q141	151-0192-00			TRANSISTOR:SILICON,NPN,SEL FROM MPS6521	04713	SPS8801
A14Q142	151-0216-00			TRANSISTOR:SILICON,PNP	04713	SPS8803
A14Q146	151-1022-00			TERM.COAXIAL:SILICON,JFE,SEL FROM 2N4392	26805	T198CS
A14Q150	151-0190-00			TRANSISTOR:SILICON,NPN	07263	S032677
A14Q157	151-0192-00			TRANSISTOR:SILICON,NPN,SEL FROM MPS6521	04713	SPS8801
A14R1	315-0223-00			RES.,FXD,CMPSN:22K OHM,5%,0.25W	01121	CB2235
A14R2	321-0193-00			RES.,FXD,FILM:1K OHM,1%,0.125W	91637	MFF1816G10000F
A14R3	315-0223-00			RES.,FXD,CMPSN:22K OHM,5%,0.25W	01121	CB2235
A14R4	321-0193-00			RES.,FXD,FILM:1K OHM,1%,0.125W	91637	MFF1816G10000F
A14R8	321-0147-00			RES.,FXD,FILM:332 OHM,1%,0.125W	91637	MFF1816G332R0F
A14R9	321-0239-00			RES.,FXD,FILM:3.01K OHM,1%,0.125W	91637	MFF1816G30100F
A14R11	315-0912-00			RES.,FXD,CMPSN:9.1K OHM,5%,0.25W	01121	CB9125
A14R12	315-0101-00			RES.,FXD,CMPSN:100 OHM,5%,0.25W	01121	CB1015
A14R13	315-0512-00			RES.,FXD,CMPSN:5.1K OHM,5%,0.25W	01121	CB5125
A14R16	315-0332-00			RES.,FXD,CMPSN:3.3K OHM,5%,0.25W	01121	CB3325
A14R17	315-0202-00			RES.,FXD,CMPSN:2K OHM,5%,0.25W	01121	CB2025
A14R21	321-0304-00			RES.,FXD,FILM:14.3K OHM,1%,0.125W	91637	MFF1816G14301F
A14R22	315-0101-00			RES.,FXD,CMPSN:100 OHM,5%,0.25W	01121	CB1015
A14R23	315-0512-00			RES.,FXD,CMPSN:5.1K OHM,5%,0.25W	01121	CB5125
A14R26	315-0101-00			RES.,FXD,CMPSN:100 OHM,5%,0.25W	01121	CB1015
A14R27	315-0332-00			RES.,FXD,CMPSN:3.3K OHM,5%,0.25W	01121	CB3325
A14R29	315-0271-00			RES.,FXD,CMPSN:270 OHM,5%,0.25W	01121	CB2715
A14R30	315-0332-00			RES.,FXD,CMPSN:3.3K OHM,5%,0.25W	01121	CB3325
A14R36	315-0752-00			RES.,FXD,CMPSN:7.5K OHM,5%,0.25W	01121	CB7525
A14R39	315-0202-00			RES.,FXD,CMPSN:2K OHM,5%,0.25W	01121	CB2025
A14R40	315-0202-00			RES.,FXD,CMPSN:2K OHM,5%,0.25W	01121	CB2025
A14R41	315-0512-00			RES.,FXD,CMPSN:5.1K OHM,5%,0.25W	01121	CB5125
A14R45	315-0332-00			RES.,FXD,CMPSN:3.3K OHM,5%,0.25W	01121	CB3325
A14R48	315-0152-00	B010100	B010150	RES.,FXD,CMPSN:1.5K OHM,5%,0.25W	01121	CB1525
A14R48	315-0101-00	B010151		RES.,FXD,CMPSN:100 OHM,5%,0.25W	01121	CB1015
A14R49	315-0102-00			RES.,FXD,CMPSN:1K OHM,5%,0.25W	01121	CB1025
A14R51	315-0222-00			RES.,FXD,CMPSN:2.2K OHM,5%,0.25W	01121	CB2225
A14R53	315-0751-00	B010100	B010150	RES.,FXD,CMPSN:750 OHM,5%,0.25W	01121	CB7515
A14R53	315-0101-00	B010151		RES.,FXD,CMPSN:100 OHM,5%,0.25W	01121	CB1015
A14R58	315-0222-00			RES.,FXD,CMPSN:2.2K OHM,5%,0.25W	01121	CB2225
A14R62	315-0202-00			RES.,FXD,CMPSN:2K OHM,5%,0.25W	01121	CB2025
A14R63	315-0103-00			RES.,FXD,CMPSN:10K OHM,5%,0.25W	01121	CB1035
A14R66	315-0202-00			RES.,FXD,CMPSN:2K OHM,5%,0.25W	01121	CB2025
A14R67	315-0202-00			RES.,FXD,CMPSN:2K OHM,5%,0.25W	01121	CB2025
A14R68	315-0622-00			RES.,FXD,CMPSN:6.2K OHM,5%,0.25W	01121	CB6225
A14R76	315-0302-00			RES.,FXD,CMPSN:3K OHM,5%,0.25W	01121	CB3025
A14R77	315-0303-00			RES.,FXD,CMPSN:30K OHM,5%,0.25W	01121	CB3035
A14R78	315-0222-00			RES.,FXD,CMPSN:2.2K OHM,5%,0.25W	01121	CB2225

http://manoman.sqhill.com

Component No.	Tektronix Part No.	Serial/Model No. Eff	Dscont	Name & Description	Mfr Code	Mfr Part Number
A14R79	315-0332-00			RES.,FXD CMPSN 3.3K OHM,5%,0.25W	01121	CB3325
A14R80	315-0301-00			RES.,FXD,CMPSN:300 OHM,5%,0.25W	01121	CB3015
A14R81	315-0102-00			RES.,FXD,CMPSN:1K OHM,5%,0.25W	01121	CB1025
A14R86	315-0332-00			RES.,FXD,CMPSN 3.3K OHM,5%,0.25W	01121	CB3325
A14R87	315-0100-00			RES.,FXD,CMPSN:10 OHM,5%,0.25W	01121	CB1005
A14R101	315-0203-00			RES.,FXD,CMPSN:20K OHM,5%,0.25W	01121	CB2035
A14R102	315-0303-00			RES.,FXD,CMPSN:30K OHM 5%,0.25W	01121	CB3035
A14R103	315-0512-00			RES.,FXD,CMPSN:5.1K OHM,5%,0.25W	01121	CB5125
A14R106	315-0102-00			RES.,FXD,CMPSN:1K OHM 5% 0.25W	01121	CB1025
A14R107	315-0153-00			RES.,FXD,CMPSN:15K OHM,5%,0.25W	01121	CB1535
A14R109	315-0201-00			RES.,FXD,CMPSN:200 OHM,5%,0.25W	01121	CB2015
A14R113	315-0102-00	B010100	B010199	RES.,FXD,CMPSN:1K OHM,5%,0.25W	01121	CB1025
A14R113	315-0391-00	B010200		RES.,FXD,CMPSN:390 OHM 5%,0.25W	01121	CB3915
A14R121	315-0201-00			RES.,FXD,CMPSN:200 OHM 5%,0.25W	01121	CB2015
A14R122	315-0152-00			RES.,FXD,CMPSN:1.5K OHM,5%,0.25W	01121	CB1525
A14R126	321-0288-00			RES.,FXD,FILM:9.76K OHM,1%,0.125W	91637	MFF1816G97600F
A14R127	321-0246-00			RES.,FXD,FILM:3.57K OHM,1%,0.125W	91637	MFF1816G35700F
A14R131	321-0288-00			RES.,FXD,FILM:9.76K OHM,1%,0.125W	91637	MFF1816G97600F
A14R132	321-0246-00			RES.,FXD,FILM:3.57K OHM,1%,0.125W	91637	MFF1816G35700F
A14R136	315-0103-00			RES.,FXD,CMPSN:10K OHM,5%,0.25W	01121	CB1035
A14R137	315-0821-00			RES.,FXD,CMPSN:820 OHM,5%,0.25W	01121	CB8215
A14R138	315-0152-00			RES.,FXD,CMPSN:1.5K OHM,5%,0.25W	01121	CB1525
A14R139	315-0822-00			RES.,FXD,CMPSN:8.2K OHM,5%,0.25W	01121	CB8225
A14R141	315-0132-00			RES.,FXD,CMPSN:1.3K OHM 5%,0.25W	01121	CB1325
A14R142	315-0271-00			RES.,FXD,CMPSN:270 OHM,5%,0.25W	01121	CB2715
A14R143	315-0302-00			RES.,FXD,CMPSN:3K OHM,5%,0.25W	01121	CB3025
A14R146	315-0332-00			RES.,FXD,CMPSN:3.3K OHM,5%,0.25W	01121	CB3325
A14R147	321-0237-00			RES.,FXD,FILM:2.87K OHM,1%,0.125W	91637	MFF1816G28700F
A14R150	315-0561-00			RES.,FXD,CMPSN:560 OHM,5%,0.25W	01121	CB5615
A14R152	315-0103-00			RES.,FXD,CMPSN:10K OHM,5%,0.25W	01121	CB1035
A14R153	315-0103-00			RES.,FXD,CMPSN:10K OHM,5%,0.25W	01121	CB1035
A14R154	315-0302-00			RES.,FXD,CMPSN:3K OHM,5%,0.25W	01121	CB3025
A14R155	315-0182-00			RES.,FXD,CMPSN:1.8K OHM,5%,0.25W	01121	CB1825
A14R156	315-0361-00			RES.,FXD,CMPSN:360 OHM,5%,0.25W	01121	CB3615
A14R157	322-0210-00			RES.,FXD,FILM:1.5K OHM,1%,0.25W	75042	CEBT0-1501F
A14R158	315-0221-00			RES.,FXD,CMPSN:220 OHM,5%,0.25W	01121	CB2215
A14R159	315-0242-00			RES.,FXD,CMPSN:2.4K OHM,5%,0.25W	01121	CB2425
A14R162	321-0312-00			RES.,FXD,FILM:17.4K OHM,1%,0.125W	91637	MFF1816G17401F
A14R163	321-0237-00			RES.,FXD,FILM 2.87K OHM,1%,0.125W	91637	MFF1816G28700F
A14R165	311-1269-00			RES.,VAR,NONWIR:20K OHM,10%,0.50W	32997	3329P-L58-203
A14R166	321-0289-00			RES.,FXD,FILM:10K OHM,1%,0.125W	91637	MFF1816G10001F
A14R167	321-0240-00			RES.,FXD FILM:3.09K OHM,1%,0.125W	91637	MFF1816G30900F
A14R169	321-0215-00			RES.,FXD,FILM:1.69K OHM,1%,0.125W	91637	MFF1816G16900F
A14R174	301-0471-00			RES.,FXD,CMPSN:470 OHM,5%,0.50W	01121	EB4715
A14R176	321-0245-00			RES.,FXD,FILM:3.48K OHM,1%,0.125W	91637	MFF1816G34800F
A14R177	315-0151-00			RES.,FXD,CMPSN:150 OHM,5%,0.25W	01121	CB1515
A14R184	315-0683-00			RES.,FXD,CMPSN:68K OHM,5%,0.25W	01121	CB6835
A14R186	315-0622-00			RES.,FXD,CMPSN:6.2K OHM,5%,0.25W	01121	CB6225
A14R187	315-0622-00			RES.,FXD,CMPSN:6.2K OHM,5%,0.25W	01121	CB6225
A14R191	315-0242-00			RES.,FXD,CMPSN:2.4K OHM,5%,0.25W	01121	CB2425
A14R192	321-0242-00			RES.,FXD,FILM:3.24K OHM,1%,0.125W	91637	MFF1816G32400F
A14R193	315-0223-00	B010100	B010199	RES.,FXD,CMPSN 22K OHM,5%,0.25W	01121	CB2235
A14R193	315-0203-00	B010200		RES.,FXD,CMPSN:20K OHM,5%,0.25W	01121	CB2035
A14R196	321-0243-00			RES.,FXD,FILM:3.32K OHM,1%,0.125W	91637	MFF1816G33200F
A14R197	315-0303-00			RES.,FXD,CMPSN:30K OHM,5%,0.25W	01121	CB3035
A14R207	315-0100-00			RES.,FXD,CMPSN:10 OHM,5%,0.25W	01121	CB1005

http://manoman.sqhill.com

Component No.	Tektronix Part No.	Serial/Model No. Eff	Dscont	Name & Description	Mfr Code	Mfr Part Number
A14TP21	214-0579-00			TERM,TEST POINT:BRS CD PL	80009	214-0579-00
A14TP79	214-0579-00			TERM,TEST POINT:BRS CD PL	80009	214-0579-00
A14TP83	214-0579-00			TERM,TEST POINT:BRS CD PL	80009	214-0579-00
A14TP84	214-0579-00			TERM,TEST POINT:BRS CD PL	80009	214-0579-00
A14TP124	214-0579-00			TERM,TEST POINT:BRS CD PL	80009	214-0579-00
A14TP129	214-0579-00			TERM,TEST POINT:BRS CD PL	80009	214-0579-00
A14TP130	214-0579-00			TERM,TEST POINT:BRS CD PL	80009	214-0579-00
A14TP152	214-0579-00			TERM,TEST POINT:BRS CD PL	80009	214-0579-00
A14TP162	214-0579-00			TERM,TEST POINT:BRS CD PL	80009	214-0579-00
A14TP201	214-0579-00			TERM,TEST POINT:BRS CD PL	80009	214-0579-00
A14TP202	214-0579-00			TERM,TEST POINT:BRS CD PL	80009	214-0579-00
A14U12	155-0011-00			MICROCIRCUIT,DI:ML,CLOCK AND CHOP BLANKING	80009	155-0011-00
A14U22	155-0010-00			MICROCIRCUIT,DI:ML,CHOP DIVIDER/BLANKING	80009	155-0010-00
A14U42	155-0013-00			MICROCIRCUIT,DI:ML,DC BINARY	80009	155-0013-00
A14U52	155-0013-00			MICROCIRCUIT,DI:ML,DC BINARY	80009	155-0013-00
A14U72	156-0798-02			MICROCIRCUIT,DI:DUAL 14 TO 1 LINE SEL/MUX	01295	SN74LS153
A14U82	155-0013-00			MICROCIRCUIT,DI:ML,DC BINARY	80009	155-0013-00
A14U116	155-0009-00			MICROCIRCUIT,DI:ML,HORIZ LOCKOUT LOGIC	80009	155-0009-00
A14U190	155-0012-00			MICROCIRCUIT,LI:ML,Z-AXIS AND AMPLIFIER	80009	155-0012-00

http://manoman.sqhill.com

Component No.	Tektronix Part No.	Serial/Model No. Eff	Dscont	Name & Description	Mfr Code	Mfr Part Number
A15	----- -----			CKT BOARD ASSY:SIGNAL OUT		
A15C13	283-0081-00			CAP.,FXD,CER DI:0.1UF,+80-20%,25V	56289	36C600
A15C17	281-0510-00			CAP.,FXD,CER DI:22PF,+/-4.4PF,500V	72982	301-000C0G0220M
A15C79	281-0603-00			CAP.,FXD,CER DI:39PF,5%,500V	72982	308-000C0G0390J
A15C91	290-0745-00			CAP ,FXD,ELCTLT:22UF,+50-10%,25V	56289	502D225
A15C95	290-0745-00			CAP. FXD,ELCTLT:22UF +50-10%,25V	56289	502D225
A15CR12	152-0141-02			SEMICOND DEVICE:SILICON,30V,150MA	01295	1N4152R
A15CR19	152-0141-02			SEMICOND DEVICE:SILICON,30V 150MA	01295	1N4152R
A15CR76	152-0141-02			SEMICOND DEVICE:SILICON,30V,150MA	01295	1N4152R
A15CR77	152-0141-02			SEMICOND DEVICE:SILICON,30V 150MA	01295	1N4152R
A15CR78	152-0141-02			SEMICOND DEVICE:SILICON,30V,150MA	01295	1N4152R
A15Q10	151-0223-03			TRANSISTOR:NPN,SI,PRESTRESSED & TESTED	80009	151-0223-03
A15Q11	151-0223-03			TRANSISTOR:NPN,SI,PRESTRESSED & TESTED	80009	151-0223-03
A15Q17	151-0220-00			TRANSISTOR:SILICON,PNP	07263	SO36228
A15Q49	151-0223-03			TRANSISTOR:NPN,SI,PRESTRESSED & TESTED	80009	151-0223-03
A15Q62	151-0223-03			TRANSISTOR:NPN,SI,PRESTRESSED & TESTED	80009	151-0223-03
A15Q77	151-0220-00			TRANSISTOR:SILICON,PNP	07263	SO36228
A15R3	315-0470-00			RES.,FXD,CMPSN:47 OHM,5%,0.25W	01121	CB4705
A15R9	315-0101-00			RES.,FXD,CMPSN:100 OHM,5%,0.25W	01121	CB1015
A15R11	315-0222-00			RES FXD,CMPSN:2.2K OHM,5%,0.25W	01121	CB2225
A15R12	315-0241-00			RES.,FXD,CMPSN:240 OHM 5%,0.25W	01121	CB2415
A15R13	315-0101-00			RES.,FXD,CMPSN:100 OHM,5%,0.25W	01121	CB1015
A15R16	321-0262-00			RES.,FXD,FILM 5.23K OHM,1%,0.125W	91637	MFF1816G52300F
A15R17	315-0152-00			RES.,FXD,CMPSN:1.5K OHM,5%,0.25W	01121	CB1525
A15R18	315-0272-00			RES.,FXD,CMPSN:2.7K OHM,5%,0.25W	01121	CB2725
A15R19	321-0190-00			RES.,FXD,FILM 931 OHM,1%,0.125W	91637	MFF1816G931R0F
A15R45	315-0201-00			RES.,FXD,CMPSN:200 OHM,5%,0.25W	01121	CB2015
A15R46	315-0752-00			RES.,FXD,CMPSN:7.5K OHM,5%,0.25W	01121	CB7525
A15R47	315-0101-00			RES.,FXD,CMPSN:100 OHM,5%,0.25W	01121	CB1015
A15R49	321-0143-00			RES.,FXD,FILM:301 OHM,1%,0.125W	91637	MFF1816G301R0F
A15R56	315-0181-00			RES.,FXD,CMPSN:180 OHM,5%,0.25W	01121	CB1815
A15R57	315-0123-00			RES.,FXD,CMPSN:12K OHM,5%,0.25W	01121	CB1235
A15R59	315-0101-00			RES.,FXD,CMPSN:100 OHM,5%,0.25W	01121	CB1015
A15R61	315-0560-00			RES.,FXD,CMPSN:56 OHM,5%,0.25W	01121	CB5605
A15R62	323-0193-00			RES.,FXD,FILM:1K OHM,1%,0.50W	75042	CECT0-1001F
A15R67	315-0181-00			RES.,FXD,CMPSN:180 OHM,5%,0.25W	01121	CB1815
A15R68	315-0123-00			RES.,FXD,CMPSN:12K OHM,5%,0.25W	01121	CB1235
A15R76	321-0180-00			RES.,FXD,FILM:732 OHM,1%,0.125W	91637	MFF1816G732R0F
A15R77	321-0226-00			RES.,FXD,FILM:2.21K OHM,1%,0.125W	91637	MFF1816G22100F
A15R78	322-0189-00			RES.,FXD,FILM:909 OHM,1%,0.25W	75042	CEBT0-9090F
A15R79	315-0390-00			RES.,FXD,CMPSN:39 OHM 5%,0.25W	01121	CB3905
A15S3	260-1811-00			SWITCH,SLIDE:DPDT,0.5A,125VAC DC	82389	C56206L2
A15S46	260-0984-00			SWITCH SLIDE:DP3T,0.5A,125V	79727	G-128-S-0012

http://manoman.sqhill.com

Component No.	Tektronix Part No.	Serial/Model No. Eff	Dscont	Name & Description	Mfr Code	Mfr Part Number
A16	----- -----			CKT BOARD ASSY:FAN		
A16B20	147-0035-00			MOTOR,DC:BRUSHLESS,10-15VDC,145MA	25088	1AD3001-0A
A16C10	290-0778-00			CAP..FXD,ELCTLT:1UF,+50-10%,50V	54473	ECE-A50N1
A16C13	290-0768-00			CAP..FXD,ELCTLT:10UF,+50-10%,100V	54473	ECE-A100V10L
A16CR10	152-0141-02			SEMICOND DEVICE:SILICON,30V,150MA	01295	1N4152R
A16CR13	152-0141-02			SEMICOND DEVICE:SILICON,30V,150MA	01295	1N4152R
A16CR21	152-0141-02			SEMICOND DEVICE:SILICON,30V,150MA	01295	1N4152R
A16CR22	152-0141-02			SEMICOND DEVICE:SILICON,30V,150MA	01295	1N4152R
A16CR23	152-0141-02			SEMICOND DEVICE:SILICON,30V,150MA	01295	1N4152R
A16CR24	152-0141-02			SEMICOND DEVICE:SILICON,30V,150MA	01295	1N4152R
A16Q10	151-0301-00			TRANSISTOR:SILICON,PNP	27014	2N2907A
A16Q20	156-0281-00			MICROCIRCUIT,LI:4 TRANSISTOR ARRAY	02735	CA3725
A16R10	301-0271-00			RES.,FXD,CMPSN:270 OHM,5%,0.50W	01121	EB2715
A16R11	315-0470-00			RES.,FXD,CMPSN:47 OHM,5%,0.25W	01121	CB4705
A16R13	301-0271-00			RES.,FXD,CMPSN:270 OHM,5%,0.50W	01121	EB2715
A16R20	307-0059-00			RES.,FXD,CMPSN:6.2 OHM,5%,0.50W	01121	EB62G5
A16R24	321-0201-00			RES.,FXD,FILM:1.21K OHM,1%,0.125W	91637	MFF1816G12100F
A16R25	321-0239-00			RES.,FXD,FILM:3.01K OHM,1%,0.125W	91637	MFF1816G30100F
A16R27	321-0022-00			RES.,FXD,FILM:16.5 OHM,1%,0.125W	91637	MFF1816G16R50F

http://manoman.sqhill.com

Component No.	Tektronix Part No.	Serial/Model No. Eff	Dscont	Name & Description	Mfr Code	Mfr Part Number
A17	----- -----			CKT BOARD ASSY:HORIZ OUTPUT AMP		
A17C22	283-0604-00			CAP.,FXD,MICA D:304PF,2%,300V	00853	D153F3040G0
A17C32	281-0184-00			CAP.,VAR,PLSTC:2-18PF,500VDC	80031	2805D00218BN02F0
A17C33	283-0359-00			CAP.,FXD,CER DI:1000PF,10%,200V	72982	8131N203C0G0102K
A17C52	283-0003-00			CAP.,FXD,CER DI:0.01UF,+80-20%,150V	91418	SP103Z151-4R9
A17C54	283-0647-00			CAP.,FXD,MICA D:70PF,1%,100V	00853	D151E700F0
A17C55	281-0166-00			CAP.,VAR,AIR DI:1.9-15.7PF,250V	74970	187-0109-005
A17C63	283-0003-00			CAP.,FXD,CER DI:0.01UF,+80-20%,150V	91418	SP103Z151-4R9
A17C66	281-0659-00			CAP.,FXD,CER DI:4.3PF,+/-0.25PF,500V	59660	301-000C0H0439C
A17C69	283-0003-00			CAP.,FXD,CER DI:0.01UF,+80-20%,150V	91418	SP103Z151-4R9
A17C71	283-0003-00			CAP.,FXD,CER DI:0.01UF,+80-20%,150V	91418	SP103Z151-4R9
A17C79	283-0003-00			CAP.,FXD,CER DI:0.01UF,+80-20%,150V	91418	SP103Z151-4R9
A17C111	281-0792-00			CAP.,FXD,CER DI:82PF,10%,100V	72982	8035D2AADC0G820K
A17C122	283-0604-00			CAP.,FXD,MICA D:304PF,2%,300V	00853	D153F3040G0
A17C154	283-0647-00			CAP.,FXD,MICA D:70PF,1%,100V	00853	D151E700F0
A17C155	281-0166-00			CAP.,VAR,AIR DI:1.9-15.7PF,250V	74970	187-0109-005
A17C166	281-0659-00			CAP.,FXD,CER DI:4.3PF,+/-0.25PF,500V	59660	301-000C0H0439C
A17C169	283-0003-00			CAP.,FXD,CER DI:0.01UF,+80-20%,150V	91418	SP103Z151-4R9
A17C171	283-0003-00			CAP.,FXD,CER DI:0.01UF,+80-20%,150V	91418	SP103Z151-4R9
A17C201	290-0745-00			CAP.,FXD,ELCTLT:22UF,+50-10%,25V	56289	502D225
A17C202	290-0745-00			CAP.,FXD,ELCTLT:22UF,+50-10%,25V	56289	502D225
A17C203	283-0003-00			CAP.,FXD,CER DI:0.01UF,+80-20%,150V	91418	SP103Z151-4R9
A17C204	283-0003-00			CAP.,FXD,CER DI:0.01UF,+80-20%,150V	91418	SP103Z151-4R9
A17C206	283-0005-00			CAP.,FXD,CER DI:0.01UF,+100-0%,250V	72982	8131N300Z5U0103P
A17C207	290-0776-00			CAP.,FXD,ELCTLT:22UF,+50-10%,10V	55680	10ULA22V-T
A17CR44	152-0141-02			SEMICOND DEVICE:SILICON,30V,150MA	01295	1N4152R
A17CR45	152-0141-02			SEMICOND DEVICE:SILICON,30V,150MA	01295	1N4152R
A17CR51	152-0141-02			SEMICOND DEVICE:SILICON,30V,150MA	01295	1N4152R
A17CR151	152-0141-02			SEMICOND DEVICE:SILICON,30V,150MA	01295	1N4152R
A17CR159	152-0141-02			SEMICOND DEVICE:SILICON,30V,150MA	01295	1N4152R
A17CR160	152-0141-02			SEMICOND DEVICE:SILICON,30V,150MA	01295	1N4152R
A17E52	276-0507-00			SHIELDING BEAD,:FERRITE	78488	57-3443
A17L15	108-0578-00			COIL,RF:FIXED,45NH	80009	108-0578-00
A17L115	108-0578-00			COIL,RF:FIXED,45NH	80009	108-0578-00
A17L201	108-0245-00			COIL,RF:3.9UH	76493	B6310-1
A17L202	108-0245-00			COIL,RF:3.9UH	76493	B6310-1
A17L207	108-0800-00			COIL,RF:820MH	71279	550-3399-48
A17Q3	151-0190-00			TRANSISTOR:SILICON,NPN	07263	S032677
A17Q21	151-0221-00			TRANSISTOR:SILICON,PNP	04713	SPS246
A17Q41	151-0220-00			TRANSISTOR:SILICON,PNP	07263	S036228
A17Q51	151-0442-00			TRANSISTOR:SILICON,NPN	80009	151-0442-00
A17Q61	151-0190-00			TRANSISTOR:SILICON,NPN	07263	S032677
A17Q62	151-0190-00			TRANSISTOR:SILICON,NPN	07263	S032677
A17Q69	151-0274-00			TRANSISTOR:SILICON,NPN	80009	151-0274-00
A17Q73	151-0270-00			TRANSISTOR:SILICON,PNP	04713	OBD
A17Q103	151-0190-00			TRANSISTOR:SILICON,NPN	07263	S032677
A17Q121	151-0221-00			TRANSISTOR:SILICON,PNP	04713	SPS246
A17Q134	151-0220-00			TRANSISTOR:SILICON,PNP	07263	S036228
A17Q141	151-0220-00			TRANSISTOR:SILICON,PNP	07263	S036228
A17Q151	151-0434-00	B010100	B010150	TRANSISTOR:SILICON,PNP	04713	SS7144
A17Q151	151-0434-01	B010151		TRANSISTOR:SILICON,PNP	80009	151-0434-01
A17Q161	151-0220-00			TRANSISTOR:SILICON,PNP	07263	S036228
A17Q162	151-0220-00			TRANSISTOR:SILICON,PNP	07263	S036228
A17Q169	151-0274-00			TRANSISTOR:SILICON,NPN	80009	151-0274-00
A17Q173	151-0270-00			TRANSISTOR:SILICON,PNP	04713	OBD
A17Q197	151-0220-00			TRANSISTOR:SILICON,PNP	07263	S036228

http://manoman.sqhill.com

Component No.	Tektronix Part No.	Serial/Model No. Eff	Dscont	Name & Description	Mfr Code	Mfr Part Number
A17R1	321-0191-00			RES.,FXD,FILM:953 OHM,1%,0.125W	91637	MFF1816G953R0F
A17R2	321-0251-00			RES.,FXD,FILM:4.02K OHM,1%,0.125W	91637	MFF1816G40200F
A17R3	321-0255-00			RES.,FXD,FILM:4.42K OHM,1%,0.125W	91637	MFF1816G44200F
A17R4	321-0175-00			RES.,FXD,FILM:649 OHM,1%,0.125W	91637	MFF1816G649R0F
A17R6	315-0511-00			RES.,FXD,CMPSN:510 OHM,5%,0.25W	01121	CB5115
A17R8	323-0177-00			RES.,FXD,FILM:680 OHM,1%,0.50W	91637	MFF1226G681R0F
A17R9	321-0074-00			RES.,FXD,FILM:57.6 OHM,1%,0.125W	91637	MFF1816G57R60F
A17R11	315-0153-00			RES.,FXD,CMPSN:15K OHM,5%,0.25W	01121	CB1535
A17R12	315-0243-00			RES.,FXD,CMPSN:24K OHM,5%,0.25W	01121	CB2435
A17R14	315-0822-00			RES.,FXD,CMPSN:8.2K OHM,5%,0.25W	01121	CB8225
A17R15	311-1466-00			RES.,VAR,NONWIR:2K OHM,20%,0.50W	73138	72-39-0
A17R21	317-0300-00			RES.,FXD,CMPSN:30 OHM,5%,0.125W	01121	BB3005
A17R22	315-0270-00			RES.,FXD,CMPSN:27 OHM,5%,0.25W	01121	CB2705
A17R23	315-0271-00			RES.,FXD,CMPSN:270 OHM,5%,0.25W	01121	CB2715
A17R29	321-0159-00	B010100	B010150	RES.,FXD,FILM:442 OHM,1%,0.125W	91637	MFF1816G442R0F
A17R29	321-0175-00	B010151		RES.,FXD,FILM:649 OHM,1%,0.125W	91637	MFF1816G649R0F
A17R30	311-1222-00			RES.,VAR,NONWIR:100 OHM,20%,0.50W	32997	3386F-T04-101
A17R31	321-0125-00	B010100	B010150	RES.,FXD,FILM:196 OHM,1%,0.125W	91637	MFF1816G196R0F
A17R31	321-0115-00	B010151		RES.,FXD,FILM:154 OHM,1%,0.125W	91637	CMF55116G154R0F
A17R32	315-0820-00			RES.,FXD,CMPSN:82 OHM,5%,0.25W	01121	CB8205
	----- -----			(NOMINAL VALUE, SELECTED)		
A17R33	311-0613-00			RES.,VAR,NONWIR:100K OHM,10%,0.50W	73138	82-27-2
A17R37	321-0184-00			RES.,FXD,FILM:806 OHM,1%,0.125W	91637	MFF1816G806R0F
A17R41	323-0706-01			RES.,FXD,FILM:800 OHM,0.5%,0.50W	91637	MFF1226G800R0D
A17R42	308-0304-00			RES.,FXD,WW:1.5K OHM,1%,3W	91637	RS2B-B15000F
A17R43	321-0205-00			RES.,FXD,FILM:1.33K OHM,1%,0.125W	91637	MFF1816G13300F
A17R44	315-0123-00			RES.,FXD,CMPSN:12K OHM,5%,0.25W	01121	CB1235
A17R51	315-0102-00			RES.,FXD,CMPSN:1K OHM,5%,0.25W	01121	CB1025
A17R52	315-0220-00			RES.,FXD,CMPSN:22 OHM,5%,0.25W	01121	CB2205
A17R54	321-0066-00			RES.,FXD,FILM:47.5 OHM,1%,0.125W	91637	MFF1816G47R50F
A17R59	321-0258-00			RES.,FXD,FILM:4.75K OHM,1%,0.125W	91637	MFF1816G47500F
A17R62	303-0222-00			RES.,FXD,CMPSN:2.2K OHM,5%,1W	01121	GB2225
A17R66	323-0327-00			RES.,FXD,FILM:24.9K OHM,1%,0.50W	91637	MFF1226G24901F
A17R67	303-0272-00			RES.,FXD,CMPSN:2.7K OHM,5%,1W	01121	GB2725
A17R69	315-0100-00			RES.,FXD,CMPSN:10 OHM,5%,0.25W	01121	CB1005
A17R71	315-0270-00			RES.,FXD,CMPSN:27 OHM,5%,0.25W	01121	CB2705
A17R72	321-0205-00			RES.,FXD,FILM:1.33K OHM,1%,0.125W	91637	MFF1816G13300F
A17R73	303-0273-00			RES.,FXD,CMPSN:27K OHM,5%,1W	01121	GB2735
A17R74	315-0680-00			RES.,FXD,CMPSN:68 OHM,5%,0.25W	01121	CB6805
A17R79	301-0333-00			RES.,FXD,CMPSN:33K OHM,5%,0.50W	01121	EB3335
A17R101	321-0191-00			RES.,FXD,FILM:953 OHM,1%,0.125W	91637	MFF1816G953R0F
A17R102	321-0251-00			RES.,FXD,FILM:4.02K OHM,1%,0.125W	91637	MFF1816G40200F
A17R103	321-0255-00			RES.,FXD,FILM:4.42K OHM,1%,0.125W	91637	MFF1816G44200F
A17R106	315-0821-00			RES.,FXD,CMPSN:820 OHM,5%,0.25W	01121	CB8215
A17R108	321-0177-00			RES.,FXD,FILM:681 OHM,1%,0.125W	91637	MFF1816G681R0F
A17R109	321-0074-00			RES.,FXD,FILM:57.6 OHM,1%,0.125W	91637	MFF1816G57R60F
A17R111	315-0563-00			RES.,FXD,CMPSN:56K OHM,5%,0.25W	01121	CB5635
A17R121	317-0300-00			RES.,FXD,CMPSN:30 OHM,5%,0.125W	01121	BB3005
A17R122	315-0270-00			RES.,FXD,CMPSN:27 OHM,5%,0.25W	01121	CB2705
A17R123	315-0271-00			RES.,FXD,CMPSN:270 OHM,5%,0.25W	01121	CB2715
A17R131	321-0188-00			RES.,FXD,FILM:887 OHM,1%,0.125W	91637	MFF1816G887R0F
A17R132	321-0188-00			RES.,FXD,FILM:887 OHM,1%,0.125W	91637	MFF1816G887R0F
A17R133	315-0432-00			RES.,FXD,CMPSN:4.3K OHM,5%,0.25W	01121	CB4325
A17R134	315-0431-00			RES.,FXD,CMPSN:430 OHM,5%,0.25W	01121	CB4315
A17R137	321-0184-00			RES.,FXD,FILM:806 OHM,1%,0.125W	91637	MFF1816G806R0F
A17R141	323-0706-01			RES.,FXD,FILM:800 OHM,0.5%,0.50W	91637	MFF1226G800R0D

http://manoman.sqhill.com

Component No.	Tektronix Part No.	Serial/Model No. Eff	Dscont	Name & Description	Mfr Code	Mfr Part Number
A17R142	308-0304-00			RES.,FXD,WW:1.5K OHM,1%,3W	91637	RS2B-B15000F
A17R143	321-0205-00			RES.,FXD,FILM:1.33K OHM,1%,0.125W	91637	MFF1816G13300F
A17R151	315-0220-00			RES.,FXD,CMPSN:22 OHM,5%,0.25W	01121	CB2205
A17R152	315-0102-00			RES.,FXD,CMPSN:1K OHM,5%,0.25W	01121	CB1025
A17R154	321-0066-00			RES.,FXD,FILM:47.5 OHM,1%,0.125W	91637	MFF1816G47R50F
A17R159	321-0260-00			RES.,FXD,FILM:4.99K OHM,1%,0.125W	91637	MFF1816G49900F
A17R160	311-1225-00			RES.,VAR,NONWIR:1K OHM,20%,0.50W	32997	3386F-T04-102
A17R165	315-0271-00			RES.,FXD,CMPSN:270 OHM,5%,0.25W	01121	CB2715
A17R166	323-0327-00			RES.,FXD,FILM:24.9K OHM,1%,0.50W	91637	MFF1226G24901F
A17R167	303-0332-00			RES.,FXD,CMPSN:3.3K OHM,5%,1W	01121	GB3325
A17R169	315-0100-00			RES.,FXD,CMPSN:10 OHM,5%,0.25W	01121	CB1005
A17R171	315-0150-00			RES.,FXD,CMPSN:15 OHM,5%,0.25W	01121	CB1505
A17R172	321-0218-00			RES.,FXD,FILM:1.82K OHM,1%,0.125W	91637	MFF1816G18200F
A17R173	301-0563-00			RES.,FXD,CMPSN:56K OHM,5%,0.50W	01121	EB5635
A17R174	315-0680-00			RES.,FXD,CMPSN:68 OHM,5%,0.25W	01121	CB6805
A17R193	307-0106-00			RES.,FXD,CMPSN:4.7 OHM,5%,0.25W	01121	CB47G5
A17R196	315-0302-00			RES.,FXD,CMPSN:3K OHM,5%,0.25W	01121	CB3025
A17R197	315-0302-00			RES.,FXD,CMPSN:3K OHM,5%,0.25W	01121	CB3025
A17R203	307-0106-00			RES.,FXD,CMPSN:4.7 OHM,5%,0.25W	01121	CB47G5
A17R204	307-0106-00			RES.,FXD,CMPSN:4.7 OHM,5%,0.25W	01121	CB47G5
A17R206	307-0106-00			RES.,FXD,CMPSN:4.7 OHM,5%,0.25W	01121	CB47G5
A17VR63	152-0282-00			SEMICOND DEVICE:ZENER,0.4W,30V,5%	04713	1N972B
A17VR79	152-0149-00			SEMICOND DEVICE:ZENER,0.4W,10V,5%	04713	SZG35009K3
A17VR196	152-0217-00			SEMICOND DEVICE:ZENER,0.4W,8.2V,5%	04713	SZG20

http://manoman.sqhill.com

Component No.	Tektronix Part No.	Serial/Model No. Eff	Dscont	Name & Description	Mfr Code	Mfr Part Number
A18	----- -----			CKT BOARD ASSY:VERTICAL OUTPUT		
A18C6	283-0185-00			CAP.,FXD,CER DI:2.5PF,5%,50V	72982	8101B057C0K0295B
A18C8	281-0603-00			CAP.,FXD,CER DI:39PF,5%,500V	72982	308-000C0G0390J
A18C9	281-0543-00			CAP.,FXD,CER DI:270PF,10%,500V	72982	301055X5P271K
A18C12	283-0181-00	B010100	B010199	CAP.,FXD,CER DI:1.8PF,10%,100V	72982	8101B121C0K0189B
A18C12	283-0160-00	B010200		CAP.,FXD,CER DI:1.5PF,10%,50V	72982	8101A058C0K159B
A18C13	283-0160-00			CAP.,FXD,CER DI:1.5PF,10%,50V	72982	8101A058C0K159B
A18C18	281-0151-00			CAP.,VAR,CER DI:1-3PF,100V	72982	518-600A1-3
A18C26	283-0185-00			CAP.,FXD,CER DI:2.5PF,5%,50V	72982	8101B057C0K0295B
A18C28	281-0603-00			CAP.,FXD,CER DI:39PF,5%,500V	72982	308-000C0G0390J
A18C29	281-0543-00			CAP.,FXD,CER DI:270PF,10%,500V	72982	301055X5P271K
A18C32	283-0181-00	B010100	B010199	CAP.,FXD,CER DI:1.8PF,10%,100V	72982	8101B121C0K0189B
A18C32	283-0160-00	B010200		CAP.,FXD,CER DI:1.5PF,10%,50V	72982	8101A058C0K159B
A18C33	283-0160-00			CAP.,FXD,CER DI:1.5PF,10%,50V	72982	8101A058C0K159B
A18C42	281-0791-00			CAP.,FXD,CER DI:270PF,10%,100V	72982	8035D2AADX5R271K
A18C46	281-0791-00			CAP.,FXD,CER DI:270PF,10%,100V	72982	8035D2AADX5R271K
A18C139	283-0212-00			CAP.,FXD,CER DI:2UF,20%,50V	72982	8141N064Z5U205M
A18C140	283-0211-00			CAP.,FXD,CER DI:0.1UF,10%,200V	72982	8141N210X7R0104K
A18C141	283-0180-00			CAP.,FXD,CER DI:5600PF,20%,200V	72982	8121N204 E 562M
A18C142	283-0108-00	B010100	B030919	CAP.,FXD,CER DI:220PF,10%,200V	56289	272C13
A18C142	283-0108-00	B030920		CAP.,FXD,CER DI:220PF,10%,200V	56289	272C13
	----- -----			(NOMINAL VALUE,SELECTED)		
A18C147	283-0181-00	B010100	B010199	CAP.,FXD,CER DI:1.8PF,10%,100V	72982	8101B121C0K0189B
A18C147	283-0160-00	B010200		CAP.,FXD,CER DI:1.5PF,10%,50V	72982	8101A058C0K159B
A18C148	283-0160-00			CAP.,FXD,CER DI:1.5PF,10%,50V	72982	8101A058C0K159B
A18C161	283-0001-00			CAP.,FXD,CER DI:0.005UF,+100-0%,500V	72982	831-559E502P
A18C168	283-0348-00			CAP.,FXD,CER DI:0.5PF,+/-0.1PF,100V	51642	100-100-NP0-508B
	----- -----			(NOMINAL VALUE, SELECTED)		
A18C169	283-0203-00			CAP.,FXD,CER DI:0.47UF,20%,50V	72982	8131N075E474M
A18C170	283-0239-00			CAP.,FXD,CER DI:0.022UF,10%,50V	72982	8121N083X7R0223K
A18C171	283-0114-00			CAP.,FXD,CER DI:0.0015UF,5%,200V	72982	805-509B152J
A18C172	283-0128-00			CAP.,FXD,CER DI:100PF,5%,500V	72982	871-536T2H101J
A18C177	283-0181-00	B010100	B010199	CAP.,FXD,CER DI:1.8PF,10%,100V	72982	8101B121C0K0189B
A18C177	283-0160-00	B010200		CAP.,FXD,CER DI:1.5PF,10%,50V	72982	8101A058C0K159B
A18C178	283-0160-00			CAP.,FXD,CER DI:1.5PF,10%,50V	72982	8101A058C0K159B
A18C206	290-0745-00			CAP.,FXD,ELCTLT:22UF,+50-10%,25V	56289	502D225
A18C207	283-0001-00			CAP.,FXD,CER DI:0.005UF,+100-0%,500V	72982	831-559E502P
A18C208	283-0001-00			CAP.,FXD,CER DI:0.005UF,+100-0%,500V	72982	831-559E502P
A18C209	283-0001-00			CAP.,FXD,CER DI:0.005UF,+100-0%,500V	72982	831-559E502P
A18C210	283-0001-00			CAP.,FXD,CER DI:0.005UF,+100-0%,500V	72982	831-559E502P
A18C211	290-0745-00			CAP.,FXD,ELCTLT:22UF,+50-10%,25V	56289	502D225
A18C213	290-0745-00			CAP.,FXD,ELCTLT:22UF,+50-10%,25V	56289	502D225
A18C226	283-0001-00			CAP.,FXD,CER DI:0.005UF,+100-0%,500V	72982	831-559E502P
A18C229	283-0001-00			CAP.,FXD,CER DI:0.005UF,+100-0%,500V	72982	831-559E502P
A18L6	SELECTED					
A18L7	108-0369-00			COIL,RF:0.12UH	80009	108-0369-00
A18L20	114-0222-00			COIL,RF:2-6UH,CORE 276-0568-00	80009	114-0222-00
A18L26	SELECTED					
A18L27	108-0369-00			COIL,RF:0.12UH	80009	108-0369-00
A18L201	108-0245-00			COIL,RF:3.9UH	76493	B6310-1
A18L203	108-0245-00			COIL,RF:3.9UH	76493	B6310-1
A18L213	108-0245-00			COIL,RF:3.9UH	76493	B6310-1
A18LR207	108-0330-00			COIL,RF:0.4UH	80009	108-0330-00
A18LR208	108-0325-00			COIL,RF:0.5UH	80009	108-0325-00
A18LR209	108-0325-00			COIL,RF:0.5UH	80009	108-0325-00
A18LR210	108-0325-00			COIL,RF:0.5UH	80009	108-0325-00
A18LR229	108-0325-00			COIL,RF:0.5UH	80009	108-0325-00
A18Q63	151-0190-05			TRANSISTOR:SILICON,NPN	80009	151-0190-05

http://manoman.sqhill.com

Component No.	Tektronix Part No.	Serial/Model No. Eff	Dscont	Name & Description	Mfr Code	Mfr Part Number
A18Q71	151-0190-05			TRANSISTOR:SILICON,NPN	80009	151-0190-05
A18Q77	151-0188-03			TRANSISTOR:SILICON,PNP,SEL	80009	151-0188-03
A18Q79	151-0302-01			TRANSISTOR:SILICON,NPN,SEL	80009	151-0302-01
A18Q93	151-0190-05			TRANSISTOR:SILICON,NPN	80009	151-0190-05
A18Q97	151-0188-03			TRANSISTOR:SILICON,PNP,SEL	80009	151-0188-03
A18Q99	151-0302-01			TRANSISTOR:SILICON,NPN,SEL	80009	151-0302-01
A18Q123	151-0190-05			TRANSISTOR:SILICON,NPN	80009	151-0190-05
A18Q124	151-0190-05			TRANSISTOR:SILICON,NPN	80009	151-0190-05
A18Q125	151-0302-01			TRANSISTOR:SILICON,NPN,SEL	80009	151-0302-01
A18Q192	151-0126-01			TRANSISTOR:SILICON,NPN,PRESTRESSED	80009	151-0126-01
A18Q196	151-0390-00			TRANSISTOR:SILICON,NPN	04713	SPS3414
A18R6	317-0270-00			RES.,FXD,CMPSN:27 OHM,5%,0.125W	01121	BB2705
A18R7	322-0114-00			RES.,FXD,FILM:150 OHM,1%,0.25W	75042	CEBT0-1500F
A18R8	321-0039-00			RES.,FXD,FILM:24.9 OHM,1%,0.125W	91637	MFF1816G24R90F
A18R9	317-0047-00			RES.,FXD,CMPSN:4.7 OHM,5%,0.125W	01121	BB47G5
A18R11	323-0069-00			RES.,FXD,FILM:51.1 OHM,1%,0.50W	91637	MFF1226G51R10F
A18R12	317-0101-00			RES.,FXD,CMPSN:100 OHM,5%,0.125W	01121	BB1015
A18R14	317-0360-00			RES.,FXD,CMPSN:36 OHM,5%,0.125W	01121	BB3605
A18R18	311-0635-00			RES.,VAR,NONWIR:1K OHM,10%,0.50W	73138	82-32-0
A18R20	315-0561-00			RES.,FXD,CMPSN:560 OHM,5%,0.25W	01121	CB5615
A18R21	315-0561-00			RES.,FXD,CMPSN:560 OHM,5%,0.25W	01121	CB5615
A18R26	317-0270-00			RES.,FXD,CMPSN:27 OHM,5%,0.125W	01121	BB2705
A18R27	322-0114-00			RES.,FXD,FILM:150 OHM,1%,0.25W	75042	CEBT0-1500F
A18R28	321-0039-00			RES.,FXD,FILM:24.9 OHM,1%,0.125W	91637	MFF1816G24R90F
A18R29	317-0047-00			RES.,FXD,CMPSN:4.7 OHM,5%,0.125W	01121	BB47G5
A18R31	323-0069-00			RES.,FXD,FILM:51.1 OHM,1%,0.50W	91637	MFF1226G51R10F
A18R32	317-0101-00			RES.,FXD,CMPSN:100 OHM,5%,0.125W	01121	BB1015
A18R34	317-0360-00			RES.,FXD,CMPSN:36 OHM,5%,0.125W	01121	BB3605
A18R41	323-0121-00			RES.,FXD,FILM:178 OHM,1%,0.50W	75042	CECT0-1780F
A18R42	315-0820-00			RES.,FXD,CMPSN:82 OHM,5%,0.25W	01121	CB8205
A18R43	SELECTED					
A18R46	315-0820-00			RES.,FXD,CMPSN:82 OHM,5%,0.25W	01121	CB8205
A18R47	SELECTED					
A18R48	323-0121-00			RES.,FXD,FILM:178 OHM,1%,0.50W	75042	CECT0-1780F
A18R62	315-0621-00			RES.,FXD,CMPSN:620 OHM,5%,0.25W	01121	CB6215
A18R63	315-0103-00			RES.,FXD,CMPSN:10K OHM,5%,0.25W	01121	CB1035
A18R64	321-0186-00			RES.,FXD,FILM:845 OHM,1%,0.125W	91637	MFF1816G845R0F
A18R65	311-0622-01			RES.,VAR,NONWIR:100 OHM,10%,0.50W	32997	3326H-K28-101
A18R68	321-0114-00			RES.,FXD,FILM:150 OHM,1%,0.125W	91637	MFF1816G150R0F
A18R69	321-0126-00			RES.,FXD,FILM:200 OHM,1%,0.125W	91637	MFF1816G200R0F
A18R71	315-0911-00			RES.,FXD,CMPSN:910 OHM,5%,0.25W	01121	CB9115
A18R72	315-0510-00			RES.,FXD,CMPSN:51 OHM,5%,0.25W	01121	CB5105
A18R73	321-0081-00			RES.,FXD,FILM:68.1 OHM,1%,0.125W	91637	MFF1816G68R10F
A18R74	321-0135-00			RES.,FXD,FILM:249 OHM,1%,0.125W	91637	MFF1816G249R0F
A18R75	321-0251-00			RES.,FXD,FILM:4.02K OHM,1%,0.125W	91637	MFF1816G40200F
A18R76	321-0123-00			RES.,FXD,FILM:187 OHM,1%,0.125W	91637	MFF1816G187R0F
A18R77	315-0361-00			RES.,FXD,CMPSN:360 OHM,5%,0.25W	01121	CB3615
A18R79	321-0203-00			RES.,FXD,FILM:1.27K OHM,1%,0.125W	91637	MFF1816G12700F
A18R81	311-1261-00	B010100	B010175	RES.,VAR,NONWIR:500 OHM,10%,0.50W	32997	3329P-L58-501
A18R81	311-1263-00	B010176		RES.,VAR,NONWIR:1K OHM,10%,0.50W	32997	3329P-L58-102
A18R82	321-0259-00			RES.,FXD,FILM:4.87K OHM,1%,0.125W	91637	MFF1816G48700F
A18R88	321-0114-00			RES.,FXD,FILM:150 OHM,1%,0.125W	91637	MFF1816G150R0F
A18R89	321-0126-00			RES.,FXD,FILM:200 OHM,1%,0.125W	91637	MFF1816G200R0F
A18R91	315-0911-00			RES.,FXD,CMPSN:910 OHM,5%,0.25W	01121	CB9115
A18R92	321-0068-00			RES.,FXD,FILM:49.9 OHM,1%,0.125W	91637	MFF1816G49R90F
A18R93	321-0081-00			RES.,FXD,FILM:68.1 OHM,1%,0.125W	91637	MFF1816G68R10F

http://manoman.sqhill.com

Component No.	Tektronix Part No.	Serial/Model No. Eff	Dscont	Name & Description	Mfr Code	Mfr Part Number
A18R94	321-0135-00			RES.,FXD,FILM:249 OHM,1%,0.125W	91637	MFF1816G249R0F
A18R95	321-0251-00			RES.,FXD,FILM:4.02K OHM,1%,0.125W	91637	MFF1816G40200F
A18R96	321-0123-00			RES.,FXD,FILM:187 OHM,1%,0.125W	91637	MFF1816G187R0F
A18R97	315-0361-00			RES.,FXD,CMPSN:360 OHM,5%,0.25W	01121	CB3615
A18R99	321-0203-00			RES.,FXD,FILM:1.27K OHM,1%,0.125W	91637	MFF1816G12700F
A18R104	321-0214-00			RES.,FXD,FILM:1.65K OHM,1%,0.125W	91637	MFF1816G16500F
A18R105	311-1262-00			RES.,VAR,NONWIR:750 OHM,10%,0.50W	32997	3329P-L58-751
A18R106	321-0214-00			RES.,FXD,FILM:1.65K OHM,1%,0.125W	91637	MFF1816G16500F
A18R107	321-0101-00			RES.,FXD,FILM:110 OHM,1%,0.125W	91637	MFF1816G110R0F
A18R111	322-0114-00			RES.,FXD,FILM:150 OHM,1%,0.25W	75042	CEBT0-1500F
A18R112	322-0114-00			RES.,FXD,FILM:150 OHM,1%,0.25W	75042	CEBT0-1500F
A18R113	321-0059-00			RES.,FXD,FILM:40.2 OHM,1%,0.125W	91637	MFF1816G40R20F
A18R121	315-0472-00			RES.,FXD,CMPSN:4.7K OHM,5%,0.25W	01121	CB4725
A18R122	315-0472-00			RES.,FXD,CMPSN:4.7K OHM,5%,0.25W	01121	CB4725
A18R123	315-0222-00			RES.,FXD,CMPSN:2.2K OHM,5%,0.25W	01121	CB2225
A18R124	315-0271-00			RES.,FXD,CMPSN:270 OHM,5%,0.25W	01121	CB2715
A18R125	315-0621-00			RES.,FXD,CMPSN:620 OHM,5%,0.25W	01121	CB6215
A18R126	323-0006-00			RES.,FXD,FILM:11.3 OHM,1%,0.5W	24546	NA65D11R3F
A18R127	323-0088-00			RES.,FXD,FILM:80.6 OHM,1%,0.50W	75042	CECT0-80R60F
A18R133	317-0470-00			RES.,FXD,CMPSN:47 OHM,5%,0.125W	01121	BB4705
A18R136	323-0097-00			RES.,FXD,FILM:100 OHM,1%,0.50W	75042	CECT0-1000F
A18R137	323-0097-00			RES.,FXD,FILM:100 OHM,1%,0.50W	75042	CECT0-1000F
A18R138	317-0510-00			RES.,FXD,CMPSN:51 OHM,5%,0.125W	01121	BB5105
	----- -----			(NOMINAL VALUE, SELECTED)		
A18R139	311-1265-00	B010100	B030919	RES.,VAR,NONWIR:2K OHM,10%,0.50W	32997	3329P-L58-202
A18R139	311-1862-00	B030920		RES.,VAR,NONWIR:5K OHM,10%,0.50W	73138	82-102-1
A18R140	315-0471-00			RES.,FXD,CMPSN:470 OHM,5%,0.25W	01121	CB4715
	----- -----			(NOMINAL VALUE, SELECTED)		
A18R141	315-0751-00			RES.,FXD,CMPSN:750 OHM,5%,0.25W	01121	CB7515
	----- -----			(NOMINAL VALUE, SELECTED)		
A18R142	311-1261-00			RES.,VAR,NONWIR:500 OHM,10%,0.50W	32997	3329P-L58-501
A18R143	SELECTED					
A18R146	323-0069-00			RES.,FXD,FILM:51.1 OHM,1%,0.50W	91637	MFF1226G51R10F
A18R147	317-0101-00			RES.,FXD,CMPSN:100 OHM,5%,0.125W	01121	BB1015
A18R160	311-0622-01			RES.,VAR,NONWIR:100 OHM,10%,0.50W	32997	3326H-K28-101
A18R163	317-0470-00			RES.,FXD,CMPSN:47 OHM,5%,0.125W	01121	BB4705
A18R166	323-0097-00			RES.,FXD,FILM:100 OHM,1%,0.50W	75042	CECT0-1000F
A18R167	323-0097-00			RES.,FXD,FILM:100 OHM,1%,0.50W	75042	CECT0-1000F
A18R169	311-0635-00			RES.,VAR,NONWIR:1K OHM,10%,0.50W	73138	82-32-0
A18R170	315-0471-00			RES.,FXD,CMPSN:470 OHM,5%,0.25W	01121	CB4715
	----- -----			(NOMINAL VALUE, SELECTED)		
A18R171	315-0561-00			RES.,FXD,CMPSN:560 OHM,5%,0.25W	01121	CB5615
	----- -----			(NOMINAL VALUE, SELECTED)		
A18R172	311-1261-00			RES.,VAR,NONWIR:500 OHM,10%,0.50W	32997	3329P-L58-501
	----- -----			(NOMINAL VALUE, SELECTED)		
A18R173	SELECTED					
A18R176	323-0069-00			RES.,FXD,FILM:51.1 OHM,1%,0.50W	91637	MFF1226G51R10F
A18R177	317-0101-00			RES.,FXD,CMPSN:100 OHM,5%,0.125W	01121	BB1015
A18R191	321-0324-00			RES.,FXD,FILM:23.2K OHM,1%,0.125W	91637	MFF1816G23201F
A18R192	321-0289-00			RES.,FXD,FILM:10K OHM,1%,0.125W	91637	MFF1816G10001F
A18R193	315-0472-00			RES.,FXD,CMPSN:4.7K OHM,5%,0.25W	01121	CB4725
A18R194	315-0362-00			RES.,FXD,CMPSN:3.6K OHM,5%,0.25W	01121	CB3625
A18R196	315-0362-00			RES.,FXD,CMPSN:3.6K OHM,5%,0.25W	01121	CB3625
A18R201	323-0064-00			RES.,FXD,FILM:45.3 OHM,1%,0.50W	91637	MFF1226G45R30F
A18R202	323-0064-00			RES.,FXD,FILM:45.3 OHM,1%,0.50W	91637	MFF1226G45R30F
A18R203	323-0077-00			RES.,FXD,FILM:61.9 OHM,1%,0.50W	75042	CECT0-61R90F
A18R226	322-0086-00			RES.,FXD,FILM:76.8 OHM,1%,0.25W		

http://manoman.sqhill.com

Component No.	Tektronix Part No.	Serial/Model No. Eff	Dscont	Name & Description	Mfr Code	Mfr Part Number
A18R228	322-0189-00			RES.,FXD,FILM:909 OHM,1%,0.25W	75042	CEBT0-9090F
A18RT133	307-0364-00			RES.,THERMAL:50 OHM,5%,0.125W	15454	DG125500J
A18U50	155-0059-00			MICROCIRCUIT,LI:ML,HIGH FREQUENCY AMPL	80009	155-0059-00
A18U150	155-0064-00			MICROCIRCUIT,LI:OUTPUT AMPLIFIER	80009	155-0064-00
A18W227	131-0566-00			BUS CONDUCTOR:DUMMY RES,2.375,22 AWG	55210	L-2007-1

http://manoman.sqhill.com

Component No.	Tektronix Part No.	Serial/Model No. Eff	Dscont	Name & Description	Mfr Code	Mfr Part Number
A19	----- -----			CKT BOARD ASSY:VERTICAL CHANNEL SW		
A19C11	281-0811-00			CAP.,FXD,CER DI:10PF,10%,100V	72982	8035D2AADC1G100K
A19C12	281-0775-00			CAP.,FXD,CER DI:0.1UF,20%,50V	72982	8005D9AABZ5U104M
A19C13	281-0775-00			CAP.,FXD,CER DI:0.1UF,20%,50V	72982	8005D9AABZ5U104M
A19C25	285-0650-00			CAP.,FXD,PLSTC:0.027UF,5%,100V	56289	410P104
A19C30	285-0598-00			CAP.,FXD,PLSTC:0.01UF,5%,100V	01002	61F10AC103
A19C33	285-0643-00			CAP.,FXD,PLSTC:0.0047UF,5%,100V	56289	410P374
A19C37	283-0666-00			CAP.,FXD,MICA D:890PF,2%,100V	00853	D151F891G0
A19C42	283-0649-00			CAP.,FXD,MICA D:105PF,1%,300V	00853	D153F1050F0
A19C50	281-0204-00			CAP.,VAR,PLSTC:2-22PF,100V	80031	287C00222MJ02
A19C53	281-0775-00			CAP.,FXD,CER DI:0.1UF,20%,50V	72982	8005D9AABZ5U104M
A19C79	281-0775-00			CAP.,FXD,CER DI:0.1UF,20%,50V	72982	8005D9AABZ5U104M
A19C80	290-0846-00			CAP.,FXD,ELCTLT:47UF,-10+75%,35 WVDC	54473	ECE-A35V47LU
A19C83	281-0775-00			CAP.,FXD,CER DI:0.1UF,20%,50V	72982	8005D9AABZ5U104M
A19C88	281-0810-00			CAP.,FXD,CER DI:5.6PF,0.5%,100V	72982	1035D2ADC0G569D
A19C111	281-0811-00			CAP.,FXD,CER DI:10PF,10%,100V	72982	8035D2AADC1G100K
A19C112	281-0775-00			CAP.,FXD,CER DI:0.1UF,20%,50V	72982	8005D9AABZ5U104M
A19C113	281-0775-00			CAP.,FXD,CER DI:0.1UF,20%,50V	72982	8005D9AABZ5U104M
A19C125	285-0650-00			CAP.,FXD,PLSTC:0.027UF,5%,100V	56289	410P104
A19C130	285-0598-00			CAP.,FXD,PLSTC:0.01UF,5%,100V	01002	61F10AC103
A19C133	285-0643-00			CAP.,FXD,PLSTC:0.0047UF,5%,100V	56289	410P374
A19C137	283-0666-00			CAP.,FXD,MICA D:890PF,2%,100V	00853	D151F891G0
A19C142	283-0649-00			CAP.,FXD,MICA D:105PF,1%,300V	00853	D153F1050F0
A19C150	281-0204-00			CAP.,VAR,PLSTC:2-22PF,100V	80031	287C00222MJ02
A19C153	281-0775-00			CAP.,FXD,CER DI:0.1UF,20%,50V	72982	8005D9AABZ5U104M
A19C179	281-0775-00			CAP.,FXD,CER DI:0.1UF,20%,50V	72982	8005D9AABZ5U104M
A19C180	290-0846-00			CAP.,FXD,ELCTLT:47UF,-10+75%,35 WVDC	54473	ECE-A35V47LU
A19C183	281-0775-00			CAP.,FXD,CER DI:0.1UF,20%,50V	72982	8005D9AABZ5U104M
A19C188	281-0810-00			CAP.,FXD,CER DI:5.6PF,0.5%,100V	72982	1035D2ADC0G569D
A19C195	281-0218-00			CAP.,VAR,CER DI:1-5PF,+2-2.5%,100V	72982	513013A1-5
A19C221	290-0745-00			CAP.,FXD,ELCTLT:22UF,+50-10%,25V	56289	502D225
A19C222	290-0745-00			CAP.,FXD,ELCTLT:22UF,+50-10%,25V	56289	502D225
A19C223	290-0745-00			CAP.,FXD,ELCTLT:22UF,+50-10%,25V	56289	502D225
A19C224	290-0745-00			CAP.,FXD,ELCTLT:22UF,+50-10%,25V	56289	502D225
A19C234	290-0782-00			CAP.,FXD,ELCTLT:4.7UF,+75-10%,35V	55680	35ULA4R7V-T
A19C235	290-0782-00			CAP.,FXD,ELCTLT:4.7UF,+75-10%,35V	55680	35ULA4R7V-T
A19C242	281-0775-00			CAP.,FXD,CER DI:0.1UF,20%,50V	72982	8005D9AABZ5U104M
A19CR94	152-0153-00			SEMICOND DEVICE:SILICON,15V,50MA	07263	FD7003
A19CR95	152-0153-00			SEMICOND DEVICE:SILICON,15V,50MA	07263	FD7003
A19CR99	152-0141-02			SEMICOND DEVICE:SILICON,30V,150MA	01295	1N4152R
A19L221	108-0245-00			COIL,RF:3.9UH	76493	B6310-1
A19L222	108-0245-00			COIL,RF:3.9UH	76493	B6310-1
A19L223	108-0245-00			COIL,RF:3.9UH	76493	B6310-1
A19L224	108-0245-00			COIL,RF:3.9UH	76493	B6310-1
A19Q59	151-0192-03			TRANSISTOR:SILICON,NPN	80009	151-0192-03
A19Q60	151-0192-03			TRANSISTOR:SILICON,NPN	80009	151-0192-03
A19Q69	151-0190-05			TRANSISTOR:SILICON,NPN	80009	151-0190-05
A19Q70	151-0190-05			TRANSISTOR:SILICON,NPN	80009	151-0190-05
A19Q79	151-0451-00			TRANSISTOR:SILICON,NPN	02735	65128
A19Q86	151-0192-03			TRANSISTOR:SILICON,NPN	80009	151-0192-03
A19Q87	151-0220-00			TRANSISTOR:SILICON,PNP	07263	S036228
A19Q88	151-0192-03			TRANSISTOR:SILICON,NPN	80009	151-0192-03
A19Q99	151-0190-05			TRANSISTOR:SILICON,NPN	80009	151-0190-05
A19Q159	151-0192-03			TRANSISTOR:SILICON,NPN	80009	151-0192-03
A19Q160	151-0192-03			TRANSISTOR:SILICON,NPN	80009	151-0192-03
A19Q169	151-0190-05			TRANSISTOR:SILICON,NPN	80009	151-0190-05

http://manoman.sqhill.com

Component No.	Tektronix Part No.	Serial/Model No. Eff	Dscont	Name & Description	Mfr Code	Mfr Part Number
A19Q170	151-0190-05			TRANSISTOR:SILICON,NPN	80009	151-0190-05
A19Q179	151-0451-00			TRANSISTOR:SILICON,NPN	02735	65128
A19Q186	151-0192-03			TRANSISTOR:SILICON,NPN	80009	151-0192-03
A19Q187	151-0220-00			TRANSISTOR:SILICON,PNP	07263	S036228
A19Q188	151-0192-03			TRANSISTOR:SILICON,NPN	80009	151-0192-03
A19Q233	151-0188-03			TRANSISTOR:SILICON,PNP,SEL	80009	151-0188-03
A19Q243	151-0188-03			TRANSISTOR:SILICON,PNP,SEL	80009	151-0188-03
A19R6	321-0289-00			RES.,FXD,FILM:10K OHM,1%,0.125W	91637	MFF1816G10001F
A19R7	321-0289-00			RES.,FXD,FILM:10K OHM,1%,0.125W	91637	MFF1816G10001F
A19R9	321-0335-00			RES.,FXD,FILM:30.1K OHM,1%,0.125W	91637	MFF1816G30101F
A19R11	321-0335-00			RES.,FXD,FILM:30.1K OHM,1%,0.125W	91637	MFF1816G30101F
A19R12	315-0101-00			RES.,FXD,CMPSN:100 OHM,5%,0.25W	01121	CB1015
A19R13	315-0101-00			RES.,FXD,CMPSN:100 OHM,5%,0.25W	01121	CB1015
A19R20	311-1235-00			RES.,VAR,NONWIR:100K OHM,20%,0.50W	32997	3386F-T04-104
A19R21	315-0104-00	B010100	B030899	RES.,FXD,CMPSN:100K OHM,5%,0.25W	01121	CB1045
A19R21	315-0913-00	B030900		RES.,FXD,CMPSN:91K OHM,5%,0.25W	01121	CB9135
A19R22	315-0564-00	B010100	B030899	RES.,FXD,CMPSN:560K OHM,5%,0.25W	01121	CB5645
A19R22	315-0224-00	B030900		RES.,FXD,CMPSN:220K OHM,5%,0.25W	01121	CB2245
A19R24	315-0203-00			RES.,FXD,CMPSN:20K OHM,5%,0.25W	01121	CB2035
A19R25	311-1214-00			RES.,VAR,NONWIR:200K OHM,20%,0.50W	73138	72-16-0
A19R26	315-0204-00			RES.,FXD,CMPSN:200K OHM,5%,0.25W	01121	CB2045
A19R29	315-0474-00			RES.,FXD,CMPSN:470K OHM,5%,0.25W	01121	CB4745
A19R30	315-0474-00			RES.,FXD,CMPSN:470K OHM,5%,0.25W	01121	CB4745
A19R32	315-0163-00			RES.,FXD,CMPSN:16K OHM,5%,0.25W	01121	CB1635
A19R33	311-1235-00			RES.,VAR,NONWIR:100K OHM,20%,0.50W	32997	3386F-T04-104
A19R34	315-0104-00			RES.,FXD,CMPSN:100K OHM,5%,0.25W	01121	CB1045
A19R36	315-0203-00			RES.,FXD,CMPSN:20K OHM,5%,0.25W	01121	CB2035
A19R37	311-1232-00			RES.,VAR,NONWIR:50K OHM,20%,0.50W	32997	3386F-T04-503
A19R38	315-0753-00			RES.,FXD,CMPSN:75K OHM,5%,0.25W	01121	CB7535
A19R41	315-0183-00			RES.,FXD,CMPSN:18K OHM,5%,0.25W	01121	CB1835
A19R42	311-1230-00			RES.,VAR,NONWIR:20K OHM,20%,0.50W	32997	3386F-T04-203
A19R43	315-0104-00			RES.,FXD,CMPSN:100K OHM,5%,0.25W	01121	CB1045
A19R45	311-1230-00			RES.,VAR,NONWIR:20K OHM,20%,0.50W	32997	3386F-T04-203
A19R46	315-0104-00			RES.,FXD,CMPSN:100K OHM,5%,0.25W	01121	CB1045
A19R50	315-0243-00			RES.,FXD,CMPSN:24K OHM,5%,0.25W	01121	CB2435
A19R53	321-0138-00			RES.,FXD,FILM:267 OHM,1%,0.125W	91637	MFF1816G267R0F
A19R54	321-0138-00			RES.,FXD,FILM:267 OHM,1%,0.125W	91637	MFF1816G267R0F
A19R56	321-0091-00			RES.,FXD,FILM:86.6 OHM,1%,0.125W	91637	MFF1816G86R60F
A19R57	321-0113-00			RES.,FXD,FILM:147 OHM,1%,0.125W	91637	MFF1816G147R0F
A19R58	321-0109-00			RES.,FXD,FILM:133 OHM,1%,0.125W	91637	MFF1816G133R0F
A19R59	321-0200-00			RES.,FXD,FILM:1.18K OHM,1%,0.125W	91637	MFF1816G11800F
A19R60	321-0200-00			RES.,FXD,FILM:1.18K OHM,1%,0.125W	91637	MFF1816G11800F
A19R63	321-0038-00			RES.,FXD,FILM:24.3 OHM,1%,0.125W	91637	MFF1816G24R30F
A19R65	315-0202-00			RES.,FXD,CMPSN:2K OHM,5%,0.25W	01121	CB2025
A19R66	315-0202-00			RES.,FXD,CMPSN:2K OHM,5%,0.25W	01121	CB2025
A19R67	315-0102-00			RES.,FXD,CMPSN:1K OHM,5%,0.25W	01121	CB1025
A19R69	315-0101-00			RES.,FXD,CMPSN:100 OHM,5%,0.25W	01121	CB1015
A19R70	315-0101-00			RES.,FXD,CMPSN:100 OHM,5%,0.25W	01121	CB1015
A19R71	315-0511-00			RES.,FXD,CMPSN:510 OHM,5%,0.25W	01121	CB5115
A19R72	315-0202-00			RES.,FXD,CMPSN:2K OHM,5%,0.25W	01121	CB2025
A19R73	315-0271-00			RES.,FXD,CMPSN:270 OHM,5%,0.25W	01121	CB2715
A19R79	303-0200-00			RES.,FXD,CMPSN:20 OHM,5%,1W	01121	GB2005
A19R80	315-0751-00			RES.,FXD,CMPSN:750 OHM,5%,0.25W	01121	CB7515
A19R81	315-0561-00			RES.,FXD,CMPSN:560 OHM,5%,0.25W	01121	CB5615
A19R82	321-0235-00			RES.,FXD,FILM:2.74K OHM,1%,0.125W	91637	MFF1816G27400F
A19R83	321-0134-00			RES.,FXD,FILM:243 OHM,1%,0.125W	91637	MFF1816G243R0F
A19R86	315-0471-00			RES.,FXD,CMPSN:470 OHM,5%,0.25W	01121	CB4715
A19R87	315-0820-00			RES.,FXD,CMPSN:82 OHM,5%,0.25W	01121	CB8205

http://manoman.sqhill.com

Component No.	Tektronix Part No.	Serial/Model No. Eff	Dscont	Name & Description	Mfr Code	Mfr Part Number
A19R88	315-0821-00			RES.,FXD,CMPSN:820 OHM,5%,0.25W	01121	CB8215
A19R91	321-0277-00			RES.,FXD,FILM:7.5K OHM,1%,0.125W	91637	MFF1816G75000F
A19R92	321-0277-00			RES.,FXD,FILM:7.5K OHM,1%,0.125W	91637	MFF1816G75000F
A19R94	315-0103-00			RES.,FXD,CMPSN:10K OHM,5%,0.25W	01121	CB1035
A19R95	315-0133-00			RES.,FXD,CMPSN:13K OHM,5%,0.25W	01121	CB1335
A19R97	315-0101-00			RES.,FXD,CMPSN:100 OHM,5%,0.25W	01121	CB1015
A19R98	315-0101-00			RES.,FXD,CMPSN:100 OHM,5%,0.25W	01121	CB1015
A19R99	315-0431-00			RES.,FXD,CMPSN:430 OHM,5%,0.25W	01121	CB4315
A19R106	321-0289-00			RES.,FXD,FILM:10K OHM,1%,0.125W	91637	MFF1816G10001F
A19R107	321-0289-00			RES.,FXD,FILM:10K OHM,1%,0.125W	91637	MFF1816G10001F
A19R109	321-0335-00			RES.,FXD,FILM:30.1K OHM,1%,0.125W	91637	MFF1816G30101F
A19R111	321-0335-00			RES.,FXD,FILM:30.1K OHM,1%,0.125W	91637	MFF1816G30101F
A19R112	315-0101-00			RES.,FXD,CMPSN:100 OHM,5%,0.25W	01121	CB1015
A19R113	315-0101-00			RES.,FXD,CMPSN:100 OHM,5%,0.25W	01121	CB1015
A19R120	311-1235-00			RES.,VAR,NONWIR:100K OHM,20%,0.50W	32997	3386F-T04-104
A19R121	315-0104-00	B010100	B030899	RES.,FXD,CMPSN:100K OHM,5%,0.25W	01121	CB1045
A19R121	315-0913-00	B030900		RES.,FXD,CMPSN:91K OHM,5%,0.25W	01121	CB9135
A19R122	315-0564-00	B010100	B030899	RES.,FXD,CMPSN:560K OHM,5%,0.25W	01121	CB5645
A19R122	315-0224-00	B030900		RES.,FXD,CMPSN:220K OHM,5%,0.25W	01121	CB2245
A19R124	315-0203-00			RES.,FXD,CMPSN:20K OHM,5%,0.25W	01121	CB2035
A19R125	311-1214-00			RES.,VAR,NONWIR:200K OHM,20%,0.50W	73138	72-16-0
A19R126	315-0204-00			RES.,FXD,CMPSN:200K OHM,5%,0.25W	01121	CB2045
A19R129	315-0474-00			RES.,FXD,CMPSN:470K OHM,5%,0.25W	01121	CB4745
A19R130	315-0474-00			RES.,FXD,CMPSN:470K OHM,5%,0.25W	01121	CB4745
A19R132	315-0163-00			RES.,FXD,CMPSN:16K OHM,5%,0.25W	01121	CB1635
A19R133	311-1235-00			RES.,VAR,NONWIR:100K OHM,20%,0.50W	32997	3386F-T04-104
A19R134	315-0104-00			RES.,FXD,CMPSN:100K OHM,5%,0.25W	01121	CB1045
A19R136	315-0203-00			RES.,FXD,CMPSN:20K OHM,5%,0.25W	01121	CB2035
A19R137	311-1232-00			RES.,VAR,NONWIR:50K OHM,20%,0.50W	32997	3386F-T04-503
A19R138	315-0753-00			RES.,FXD,CMPSN:75K OHM,5%,0.25W	01121	CB7535
A19R141	315-0183-00			RES.,FXD,CMPSN:18K OHM,5%,0.25W	01121	CB1835
A19R142	311-1230-00			RES.,VAR,NONWIR:20K OHM,20%,0.50W	32997	3386F-T04-203
A19R143	315-0104-00			RES.,FXD,CMPSN:100K OHM,5%,0.25W	01121	CB1045
A19R145	311-1230-00			RES.,VAR,NONWIR:20K OHM,20%,0.50W	32997	3386F-T04-203
A19R146	315-0104-00			RES.,FXD,CMPSN:100K OHM,5%,0.25W	01121	CB1045
A19R150	315-0243-00			RES.,FXD,CMPSN:24K OHM,5%,0.25W	01121	CB2435
A19R153	321-0138-00			RES.,FXD,FILM:267 OHM,1%,0.125W	91637	MFF1816G267R0F
A19R154	321-0138-00			RES.,FXD,FILM:267 OHM,1%,0.125W	91637	MFF1816G267R0F
A19R156	321-0091-00			RES.,FXD,FILM:86.6 OHM,1%,0.125W	91637	MFF1816G86R60F
A19R157	321-0113-00			RES.,FXD,FILM:147 OHM,1%,0.125W	91637	MFF1816G147R0F
A19R158	321-0109-00			RES.,FXD,FILM:133 OHM,1%,0.125W	91637	MFF1816G133R0F
A19R159	321-0200-00			RES.,FXD,FILM:1.18K OHM,1%,0.125W	91637	MFF1816G11800F
A19R160	321-0200-00			RES.,FXD,FILM:1.18K OHM,1%,0.125W	91637	MFF1816G11800F
A19R163	321-0038-00			RES.,FXD,FILM:24.3 OHM,1%,0.125W	91637	MFF1816G24R30F
A19R165	315-0202-00			RES.,FXD,CMPSN:2K OHM,5%,0.25W	01121	CB2025
A19R166	315-0202-00			RES.,FXD,CMPSN:2K OHM,5%,0.25W	01121	CB2025
A19R167	315-0102-00			RES.,FXD,CMPSN:1K OHM,5%,0.25W	01121	CB1025
A19R169	315-0101-00			RES.,FXD,CMPSN:100 OHM,5%,0.25W	01121	CB1015
A19R170	315-0101-00			RES.,FXD,CMPSN:100 OHM,5%,0.25W	01121	CB1015
A19R171	315-0511-00			RES.,FXD,CMPSN:510 OHM,5%,0.25W	01121	CB5115
A19R172	315-0202-00			RES.,FXD,CMPSN:2K OHM,5%,0.25W	01121	CB2025
A19R173	315-0271-00			RES.,FXD,CMPSN:270 OHM,5%,0.25W	01121	CB2715
A19R179	303-0200-00			RES.,FXD,CMPSN:20 OHM,5%,1W	01121	GB2005
A19R180	315-0681-00			RES.,FXD,CMPSN:680 OHM,5%,0.25W	01121	CB6815
A19R181	315-0511-00			RES.,FXD,CMPSN:510 OHM,5%,0.25W	01121	CB5115
A19R182	321-0238-00			RES.,FXD,FILM:2.94K OHM,1%,0.125W	91637	MFF1816G29400F
A19R183	321-0657-00			RES.,FXD,FILM:60 OHM,1%,0.125W	91637	MFF1816G60R00F
A19R186	315-0471-00			RES.,FXD,CMPSN:470 OHM,5%,0.25W	01121	CB4715

http://manoman.sqhill.com

Component No.	Tektronix Part No.	Serial/Model No. Eff	Dscont	Name & Description	Mfr Code	Mfr Part Number
A19R187	315-0820-00			RES.,FXD,CMPSN:82 OHM,5%,0.25W	01121	CB8205
A19R188	315-0751-00			RES.,FXD,CMPSN:750 OHM,5%,0.25W	01121	CB7515
A19R191	321-0277-00			RES.,FXD,FILM:7.5K OHM,1%,0.125W	91637	MFF1816G75000F
A19R192	321-0277-00			RES.,FXD,FILM:7.5K OHM,1%,0.125W	91637	MFF1816G75000F
A19R195	311-1259-00			RES.,VAR,NONWIR:100 OHM,10%,0.50W	32997	3329P-L58-101
A19R231	321-0257-00			RES.,FXD,FILM:4.64K OHM,1%,0.125W	91637	MFF1816G46400F
A19R232	321-0145-00			RES.,FXD,FILM:316 OHM,1%,0.125W	91637	MFF1816G316R0F
A19R233	315-0102-00			RES.,FXD,CMPSN:1K OHM,5%,0.25W	01121	CB1025
A19R234	315-0100-00			RES.,FXD,CMPSN:10 OHM,5%,0.25W	01121	CB1005
A19R235	315-0100-00			RES.,FXD,CMPSN:10 OHM,5%,0.25W	01121	CB1005
A19R241	321-0238-00			RES.,FXD,FILM:2.94K OHM,1%,0.125W	91637	MFF1816G29400F
A19R242	321-0223-00			RES.,FXD,FILM:2.05K OHM,1%,0.125W	91637	MFF1816G20500F
A19R243	315-0820-00			RES.,FXD,CMPSN:82 OHM,5%,0.25W	01121	CB8205
A19U11	156-1149-00			MICROCIRCUIT,LI:OPERATIONAL AMP,JFET INPUT	27014	LF351N
A19U50	156-1149-00			MICROCIRCUIT,LI:OPERATIONAL AMP,JFET INPUT	27014	LF351N
A19U75	155-0206-00			MICROCIRCUIT,LI:CHANNEL SWITCH	80009	155-0206-00
A19U111	156-1149-00			MICROCIRCUIT,LI:OPERATIONAL AMP,JFET INPUT	27014	LF351N
A19U150	156-1149-00			MICROCIRCUIT,LI:OPERATIONAL AMP,JFET INPUT	27014	LF351N

http://manoman.sqhill.com

Component No.	Tektronix Part No.	Serial/Model No. Eff	Dscont	Name & Description	Mfr Code	Mfr Part Number
A20	----- -----			CKT BOARD ASSY:HIGH VOLTAGE		
A20C9	283-0068-00			CAP.,FXD,CER DI:0.01UF,+100-0%,500V	56289	19C241
A20C10	283-0068-00			CAP.,FXD,CER DI:0.01UF,+100-0%,500V	56289	19C241
A20C11	283-0068-00			CAP.,FXD,CER DI:0.01UF,+100-0%,500V	56289	19C241
A20C22	283-0111-00			CAP.,FXD,CER DI:0.1UF,20%,50V	72982	8121-N088Z5U104M
A20C33	283-0078-00			CAP.,FXD,CER DI:0.001UF,20%,500V	56289	20C114A8
A20C34	283-0068-00			CAP.,FXD,CER DI:0.01UF,+100-0%,500V	56289	19C241
A20C36	283-0271-00			CAP.,FXD,CER DI:0.001UF,20%,4000V	56289	33C325
A20C39	283-0271-00			CAP.,FXD,CER DI:0.001UF,20%,4000V	56289	33C325
A20C42	283-0271-00			CAP.,FXD,CER DI:0.001UF,20%,4000V	56289	33C325
A20C53	283-0279-00			CAP.,FXD,CER DI:0.001UF,20%,3000V	56289	55C153
A20C64	283-0092-00			CAP.,FXD,CER DI:0.03UF,+80-20%,200V	72982	845-534E303Z
A20C66	283-0271-00			CAP.,FXD,CER DI:0.001UF,20%,4000V	56289	33C325
A20C69	283-0271-00			CAP.,FXD,CER DI:0.001UF,20%,4000V	56289	33C325
A20C72	283-0271-00			CAP.,FXD,CER DI:0.001UF,20%,4000V	56289	33C325
A20C82	283-0105-00			CAP.,FXD,CER DI:0.01UF,+80-20%,2000V	56289	41C316
A20C84	283-0272-00			CAP.,FXD,CER DI:0.0068UF,30%,4000V	72982	3888-510C 682M
A20C86	283-0272-00			CAP.,FXD,CER DI:0.0068UF,30%,4000V	72982	3888-510C 682M
A20C87	283-0105-00			CAP.,FXD,CER DI:0.01UF,+80-20%,2000V	56289	41C316
A20C89	283-0272-00			CAP.,FXD,CER DI:0.0068UF,30%,4000V	72982	3888-510C 682M
A20C91	283-0272-00			CAP.,FXD,CER DI:0.0068UF,30%,4000V	72982	3888-510C 682M
A20C103	290-0767-00			CAP.,FXD,ELCTLT:4.7UF,+75-10%,160V	56289	502D228
A20C104	290-0767-00			CAP.,FXD,ELCTLT:4.7UF,+75-10%,160V	56289	502D228
A20C112	281-0593-00			CAP.,FXD,CER DI:3.9PF,10%,500V	04222	7001-1113
A20C119	283-0271-00			CAP.,FXD,CER DI:0.001UF,20%,4000V	56289	33C325
A20C122	283-0000-00			CAP.,FXD,CER DI:0.001UF,+100-0%,500V	59660	831-519-Z5U-102P
A20C127	283-0000-00			CAP.,FXD,CER DI:0.001UF,+100-0%,500V	59660	831-519-Z5U-102P
A20C143	283-0068-00			CAP.,FXD,CER DI:0.01UF,+100-0%,500V	56289	19C241
A20C144	283-0068-00			CAP.,FXD,CER DI:0.01UF,+100-0%,500V	56289	19C241
A20C156	283-0068-00			CAP.,FXD,CER DI:0.01UF,+100-0%,500V	56289	19C241
A20C159	283-0068-00			CAP.,FXD,CER DI:0.01UF,+100-0%,500V	56289	19C241
A20CR17	152-0586-00	B010100	B010419	SEMICOND DEVICE:SILICON,600V,500MA	14936	RGP10J
A20CR17	152-0242-00	B010420		SEMICOND DEVICE:SILICON,225V,200MA	07263	FDH5004
A20CR18	152-0242-00			SEMICOND DEVICE:SILICON,225V,200MA	07263	FDH5004
A20CR19	152-0242-00			SEMICOND DEVICE:SILICON,225V,200MA	07263	FDH5004
A20CR33	152-0242-00			SEMICOND DEVICE:SILICON,225V,200MA	07263	FDH5004
A20CR34	152-0242-00			SEMICOND DEVICE:SILICON,225V,200MA	07263	FDH5004
A20CR37	152-0242-00			SEMICOND DEVICE:SILICON,225V,200MA	07263	FDH5004
A20CR38	152-0242-00			SEMICOND DEVICE:SILICON,225V,200MA	07263	FDH5004
A20CR51	152-0242-00			SEMICOND DEVICE:SILICON,225V,200MA	07263	FDH5004
A20CR63	152-0242-00			SEMICOND DEVICE:SILICON,225V,200MA	07263	FDH5004
A20CR64	152-0242-00			SEMICOND DEVICE:SILICON,225V,200MA	07263	FDH5004
A20CR67	152-0242-00			SEMICOND DEVICE:SILICON,225V,200MA	07263	FDH5004
A20CR68	152-0242-00			SEMICOND DEVICE:SILICON,225V,200MA	07263	FDH5004
A20CR82	152-0639-00			SEMICOND DEVICE:RECT,SI,10KV,10MA	52306	CX345
A20CR83	152-0639-00			SEMICOND DEVICE:RECT,SI,10KV,10MA	52306	CX345
A20CR101	152-0586-00			SEMICOND DEVICE:SILICON,600V,500MA	14936	RGP10J
A20CR102	152-0586-00			SEMICOND DEVICE:SILICON,600V,500MA	14936	RGP10J
A20CR113	152-0242-00			SEMICOND DEVICE:SILICON,225V,200MA	07263	FDH5004
A20CR114	152-0242-00			SEMICOND DEVICE:SILICON,225V,200MA	07263	FDH5004
A20CR124	152-0242-00			SEMICOND DEVICE:SILICON,225V,200MA	07263	FDH5004
A20CR126	152-0242-00			SEMICOND DEVICE:SILICON,225V,200MA	07263	FDH5004
A20CR129	152-0066-03			SEMICOND DEVICE:RECT,SI,400V,1A	80009	152-0066-03
A20DS45	150-0035-00			LAMP,GLOW:90V,0.3MA	53944	A1B-3
A20DS46	150-0035-00			LAMP,GLOW:90V,0.3MA	53944	A1B-3
A20DS47	150-0035-00			LAMP,GLOW:90V,0.3MA	53944	A1B-3
A20DS75	150-0035-00			LAMP,GLOW:90V,0.3MA	53944	A1B-3

http://manoman.sqhill.com

Component No.	Tektronix Part No.	Serial/Model No. Eff	Dscont	Name & Description	Mfr Code	Mfr Part Number
A20DS76	150-0035-00			LAMP,GLOW:90V,0.3MA	53944	A1B-3
A20DS90	150-0035-00			LAMP,GLOW:90V,0.3MA	53944	A1B-3
A20DS113	150-0035-00	XB010181		LAMP,GLOW:90V,0.3MA	53944	A1B-3
A20Q23	151-0443-00			TRANSISTOR:SILICON,PNP	80009	151-0443-00
A20Q129	151-0279-00			TRANSISTOR:SILICON,NPN	80009	151-0279-00
A20R14	308-0123-00			RES.,FXD,WW:20 OHM,5%,5W	05347	C56-20R0J
A20R16	301-0272-00			RES.,FXD,CMPSN:2.7K OHM,5%,0.50W	01121	EB2725
A20R17	315-0100-02			RES.,FXD,CMPSN:10 OHM,5%,0.25W	01121	CB1005
A20R18	315-0472-03	XB010420		RES.,FXD,CMPSN:4.7K OHM,5%,0.25W	01121	CB4725
A20R19	315-0472-03	XB010420		RES.,FXD,CMPSN:4.7K OHM,5%,0.25W	01121	CB4725
A20R22	315-0304-00			RES.,FXD,CMPSN:300K OHM,5%,0.25W	01121	CB3045
A20R23	315-0113-00			RES.,FXD,CMPSN:11K OHM,5%,0.25W	01121	CB1135
A20R24	315-0153-00			RES.,FXD,CMPSN:15K OHM,5%,0.25W	01121	CB1535
A20R31	301-0305-00			RES.,FXD,CMPSN:3M OHM,5%,0.50W	01121	EB3055
A20R32	301-0305-00			RES.,FXD,CMPSN:3M OHM,5%,0.50W	01121	EB3055
A20R33	315-0104-03			RES.,FXD CMPSN:100K OHM,5%,0.25W	01121	CB1045
A20R37	315-0183-03			RES.,FXD,CMPSN:18K OHM,5%,0.25W	01121	CB1835
A20R39	315-0226-01			RES.,FXD,CMPSN:22M OHM,5%,0.25W	01121	CB2265
A20R42	315-0202-02			RES.,FXD,CMPSN:2K OHM,5%,0.25W	01121	CB2025
A20R43	315-0104-03			RES.,FXD CMPSN:100K OHM,5%,0.25W	01121	CB1045
A20R44	315-0105-03			RES.,FXD,CMPSN:1M OHM,5%,0.25W	01121	CB1055
A20R52	307-1135-00			RES NTWK,FXD FI:HIGH VOLTAGE DIVIDER	80009	307-1135-00
A20R55	311-1968-00			RES.,VAR,NONWIR:PNL,5M OHM,20%,0.50W	01121	72M4N048S505M
A20R61	301-0305-00			RES.,FXD,CMPSN:3M OHM,5%,0.50W	01121	EB3055
A20R62	301-0305-00			RES.,FXD,CMPSN:3M OHM,5%,0.50W	01121	EB3055
A20R63	315-0103-03			RES.,FXD,CMPSN:10K OHM,5%,0.25W	01121	CB1035
A20R65	311-1284-00			RES.,VAR,NONWIR:20K OHM,10%,0.5W	32997	3329W-L58-203
A20R66	315-0123-00			RES.,FXD,CMPSN:12K OHM,5%,0.25W	01121	CB1235
A20R67	315-0183-03			RES.,FXD,CMPSN:18K OHM,5%,0.25W	01121	CB1835
A20R69	315-0226-01			RES.,FXD,CMPSN:22M OHM,5%,0.25W	01121	CB2265
A20R72	315-0101-03			RES.,FXD,CMPSN:100 OHM,5%,0.25W	01121	CB1015
A20R73	315-0104-03			RES.,FXD CMPSN:100K OHM,5%,0.25W	01121	CB1045
A20R84	315-0472-03			RES.,FXD,CMPSN:4.7K OHM,5%,0.25W	01121	CB4725
A20R86	315-0472-03			RES.,FXD,CMPSN:4.7K OHM,5%,0.25W	01121	CB4725
A20R87	315-0472-03			RES.,FXD,CMPSN:4.7K OHM,5%,0.25W	01121	CB4725
A20R89	315-0331-03			RES.,FXD,CMPSN:330 OHM,5%,0.25W	01121	CB3315
A20R91	315-0101-03			RES.,FXD,CMPSN:100 OHM,5%,0.25W	01121	CB1015
A20R92	308-0058-00			RES.,FXD,WW:1.5 OHM,10%,1W	75042	BW20-1R500K
A20R93	315-0104-03			RES.,FXD CMPSN:100K OHM,5%,0.25W	01121	CB1045
A20R103	315-0100-02			RES.,FXD,CMPSN:10 OHM,5%,0.25W	01121	CB1005
A20R104	301-0560-00	B010100	B010180	RES.,FXD,CMPSN:56 OHM,5%,0.50W	01121	EB5605
A20R104	301-0101-00	B010181		RES.,FXD,CMPSN:100 OHM,5%,0.50W	01121	EB1015
A20R112	315-0136-01			RES.,FXD,CMPSN:13M OHM,5%,0.25W	01121	CB1365
A20R113	315-0203-02			RES.,FXD,CMPSN:20K OHM,5%,0.25W	01121	CB2035
A20R115	311-1285-00			RES.,VAR,NONWIR:25K OHM,10%,0.5W	32997	3329W-L58-253
A20R116	321-0430-00			RES.,FXD,FILM:294K OHM,1%,0.125W	91637	MFF1816G29402F
A20R119	301-0102-00			RES.,FXD,CMPSN:1K OHM,5%,0.50W	01121	EB1025
A20R122	315-0474-00			RES.,FXD,CMPSN:470K OHM,5%,0.25W	01121	CB4745
A20R124	315-0331-03			RES.,FXD,CMPSN:330 OHM,5%,0.25W	01121	CB3315
A20R126	315-0681-00			RES.,FXD,CMPSN:680 OHM,5%,0.25W	01121	CB6815
A20R127	315-0332-00			RES.,FXD,CMPSN:3.3K OHM,5%,0.25W	01121	CB3325
A20R128	301-0623-00			RES.,FXD,CMPSN:62K OHM,5%,0.50W	01121	EB6235
A20R129	315-0150-00			RES.,FXD,CMPSN:15 OHM,5%,0.25W	01121	CB1505
A20R143	311-1287-00			RES.,VAR,NONWIR:TRMR,100K OHM,0.50W	32997	3329W-L58-104
A20R154	321-0299-00			RES.,FXD,FILM:12.7K OHM,1%,0.125W	91637	MFF1816G12701F
A20R155	311-1281-00			RES.,VAR,NONWIR:2.5K OHM,10%,0.5W	32997	3329W-L58-252
A20R156	321-0338-00			RES.,FXD,FILM:32.4K OHM,1%,0.125W	91637	MFF1816G32401F
A20T14	120-1281-00			TRANSFORMER,RF:TOROID,2 WINDINGS	80009	120-1281-00

http://manoman.sqhill.com

Component No.	Tektronix Part No.	Serial/Model No. Eff	Dscont	Name & Description	Mfr Code	Mfr Part Number
A20U21	152-0716-00			SEMICOND DVC,DI:HV MULTR	52306	CMX387A
A20U123	156-0067-12			MICROCIRCUIT,LI:OPERATIONAL AMPLIFIER	04713	MC1741CU
A20VR51	152-0247-00			SEMICOND DEVICE:ZENER,0.4W,150V,5%	04713	SZG275K1RL

http://manoman.sqhill.com

Component No.	Tektronix Part No.	Serial/Model No. Eff	Dscont	Name & Description	Mfr Code	Mfr Part Number
A21	----- -----			CKT BOARD ASSY:Z-AXIS		
A21C2	283-0003-00			CAP.,FXD,CER DI:0.01UF,+80-20%,150V	91418	SP103Z151-4R9
A21C3	283-0003-00			CAP.,FXD,CER DI:0.01UF,+80-20%,150V	91418	SP103Z151-4R9
A21C4	290-0539-00			CAP.,FXD,ELCTLT:47UF,20%,20V	90201	THF476M020P1F
A21C6	283-0003-00			CAP.,FXD,CER DI:0.01UF,+80-20%,150V	91418	SP103Z151-4R9
A21C7	283-0003-00			CAP.,FXD,CER DI:0.01UF,+80-20%,150V	91418	SP103Z151-4R9
A21C8	283-0177-00			CAP.,FXD,CER DI:1UF,+80-20%,25V	56289	273C5
A21C9	283-0059-00			CAP.,FXD,CER DI:1UF,+80-20%,25V	72982	8131N031Z5U0105Z
A21C10	283-0003-00			CAP.,FXD,CER DI:0.01UF,+80-20%,150V	91418	SP103Z151-4R9
A21C11	290-0539-00			CAP.,FXD,ELCTLT:47UF,20%,20V	90201	THF476M020P1F
A21C12	283-0003-00			CAP.,FXD,CER DI:0.01UF,+80-20%,150V	91418	SP103Z151-4R9
A21C13	283-0003-00			CAP.,FXD,CER DI:0.01UF,+80-20%,150V	91418	SP103Z151-4R9
A21C76	283-0001-00			CAP.,FXD,CER DI:0.005UF,+100-0%,500V	72982	831-559E502P
A21C79	283-0001-00			CAP.,FXD,CER DI:0.005UF,+100-0%,500V	72982	831-559E502P
A21C83	283-0003-00			CAP.,FXD,CER DI:0.01UF,+80-20%,150V	91418	SP103Z151-4R9
A21C103	283-0000-00			CAP.,FXD,CER DI:0.001UF,+100-0%,500V	59660	831-519-Z5U-102P
A21C113	283-0003-00			CAP.,FXD,CER DI:0.01UF,+80-20%,150V	91418	SP103Z151-4R9
A21C123	283-0003-00			CAP.,FXD,CER DI:0.01UF,+80-20%,150V	91418	SP103Z151-4R9
A21C150	281-0118-00			CAP.,VAR,MICA D:8-90PF,175V	52769	GSM231
A21C151	281-0550-00			CAP.,FXD,CER DI:120PF,10%,500V	04222	7001-1373
A21C155	281-0118-00			CAP.,VAR,MICA D:8-90PF,175V	52769	GSM231
A21C156	281-0584-00			CAP.,FXD,CER DI:100PF,5%,500V	72982	0301000Y5E0101J
A21C169	283-0211-00			CAP.,FXD,CER DI:0.1UF,10%,200V	72982	8141N210X7R0104K
A21C171	290-0149-00			CAP.,FXD,ELCTLT:5UF,+75-10%,150V	56289	30D505G150DD4
A21C172	283-0000-00			CAP.,FXD,CER DI:0.001UF,+100-0%,500V	59660	831-519-Z5U-102P
A21C179	281-0619-00			CAP.,FXD,CER DI:1.2PF,+/-0.1PF,200V	59660	374 018 C0K0129B
A21C180	281-0092-00			CAP.,VAR,CER DI:9-35PF,200V	72982	538-011 D9-35
A21C183	283-0003-00			CAP.,FXD,CER DI:0.01UF,+80-20%,150V	91418	SP103Z151-4R9
A21C186	281-0609-00			CAP.,FXD,CER DI:1PF,+/-0.1PF,500V	04222	7040-C0K-1R0B
A21CR32	152-0141-02			SEMICOND DEVICE:SILICON,30V,150MA	01295	1N4152R
A21CR35	152-0141-02			SEMICOND DEVICE:SILICON,30V,150MA	01295	1N4152R
A21CR36	152-0141-02			SEMICOND DEVICE:SILICON,30V,150MA	01295	1N4152R
A21CR37	152-0141-02			SEMICOND DEVICE:SILICON,30V,150MA	01295	1N4152R
A21CR39	152-0141-02			SEMICOND DEVICE:SILICON,30V,150MA	01295	1N4152R
A21CR43	152-0141-02			SEMICOND DEVICE:SILICON,30V,150MA	01295	1N4152R
A21CR46	152-0141-02			SEMICOND DEVICE:SILICON,30V,150MA	01295	1N4152R
A21CR47	152-0333-00			SEMICOND DEVICE:SILICON,55V,200MA	07263	FDH-6012
A21CR64	152-0141-02			SEMICOND DEVICE:SILICON,30V,150MA	01295	1N4152R
A21CR65	152-0141-02			SEMICOND DEVICE:SILICON,30V,150MA	01295	1N4152R
A21CR76	152-0141-02			SEMICOND DEVICE:SILICON,30V,150MA	01295	1N4152R
A21CR82	152-0141-02			SEMICOND DEVICE:SILICON,30V,150MA	01295	1N4152R
A21CR86	152-0066-03			SEMICOND DEVICE:RECT,SI,400V,1A	80009	152-0066-03
A21CR105	152-0141-02			SEMICOND DEVICE:SILICON,30V,150MA	01295	1N4152R
A21CR127	152-0141-02			SEMICOND DEVICE:SILICON,30V,150MA	01295	1N4152R
A21CR143	152-0071-00			SEMICOND DEVICE:GERMANIUM,15V,40MA	14433	G865
A21CR152	152-0141-02			SEMICOND DEVICE:SILICON,30V,150MA	01295	1N4152R
A21CR153	152-0141-02			SEMICOND DEVICE:SILICON,30V,150MA	01295	1N4152R
A21CR173	152-0141-02			SEMICOND DEVICE:SILICON,30V,150MA	01295	1N4152R
A21CR177	152-0233-00			SEMICOND DEVICE:SILICON,85V,100MA	80009	152-0233-00
A21CR184	152-0141-02			SEMICOND DEVICE:SILICON,30V,150MA	01295	1N4152R
A21Q32	151-0190-05			TRANSISTOR:SILICON,NPN	80009	151-0190-05
A21Q36	151-0223-03			TRANSISTOR:NPN,SI,PRESTRESSED & TESTED	80009	151-0223-03
A21Q39	151-0190-05			TRANSISTOR:SILICON,NPN	80009	151-0190-05
A21Q46	151-0223-03			TRANSISTOR:NPN,SI,PRESTRESSED & TESTED	80009	151-0223-03
A21Q49	151-0190-05			TRANSISTOR:SILICON,NPN	80009	151-0190-05
A21Q50	151-0190-05			TRANSISTOR:SILICON,NPN	80009	151-0190-05

http://manoman.sqhill.com

Component No.	Tektronix Part No.	Serial/Model No. Eff	Dscont	Name & Description	Mfr Code	Mfr Part Number
A21Q67	151-0220-00			TRANSISTOR:SILICON,PNP	07263	S036228
A21Q68	151-0220-00			TRANSISTOR:SILICON,PNP	07263	S036228
A21Q77	151-0443-02			TRANSISTOR:SILICON,PNP	80009	151-0443-02
A21Q83	151-0444-01			TRANSISTOR:SILICON,NPN	80009	151-0444-01
A21Q105	151-0190-05			TRANSISTOR:SILICON,NPN	80009	151-0190-05
A21Q113	151-0220-00			TRANSISTOR:SILICON,PNP	07263	S036228
A21Q122	151-0220-00			TRANSISTOR:SILICON,PNP	07263	S036228
A21Q127	151-0192-03			TRANSISTOR:SILICON,NPN	80009	151-0192-03
A21Q132	151-0220-00			TRANSISTOR:SILICON,PNP	07263	S036228
A21Q142	151-0190-05			TRANSISTOR:SILICON,NPN	80009	151-0190-05
A21Q143	151-0220-00			TRANSISTOR:SILICON,PNP	07263	S036228
A21Q162	151-0220-00			TRANSISTOR:SILICON,PNP	07263	S036228
A21Q166	151-0434-01			TRANSISTOR:SILICON,PNP	80009	151-0434-01
A21Q167	151-0434-01			TRANSISTOR:SILICON,PNP	80009	151-0434-01
A21Q173	151-0270-00			TRANSISTOR:SILICON,PNP	04713	OBD
A21Q183	151-0274-00			TRANSISTOR:SILICON,NPN	80009	151-0274-00
A21Q184	151-0192-03			TRANSISTOR:SILICON,NPN	80009	151-0192-03
A21R4	307-0106-00			RES.,FXD,CMPSN:4.7 OHM,5%,0.25W	01121	CB47G5
A21R8	315-0100-00			RES.,FXD,CMPSN:10 OHM,5%,0.25W	01121	CB1005
A21R9	307-0107-00			RES.,FXD,CMPSN:5.6 OHM,5%,0.25W	01121	CB56G5
A21R11	307-0106-00			RES.,FXD,CMPSN:4.7 OHM,5%,0.25W	01121	CB47G5
A21R12	315-0100-00			RES.,FXD,CMPSN:10 OHM,5%,0.25W	01121	CB1005
A21R31	321-0306-00			RES.,FXD,FILM:15K OHM,1%,0.125W	91637	MFF1816G15001F
A21R35	315-0221-00			RES.,FXD,CMPSN:220 OHM,5%,0.25W	01121	CB2215
A21R36	315-0102-00			RES.,FXD,CMPSN:1K OHM,5%,0.25W	01121	CB1025
A21R37	321-0305-00			RES.,FXD,FILM:14.7K OHM,1%,0.125W	91637	MFF1816G14701F
A21R42	321-0333-00			RES.,FXD,FILM:28.7K OHM,1%,0.125W	91637	MFF1816G28701F
A21R43	321-0333-00			RES.,FXD,FILM:28.7K OHM,1%,0.125W	91637	MFF1816G28701F
A21R44	315-0102-00			RES.,FXD,CMPSN:1K OHM,5%,0.25W	01121	CB1025
A21R46	315-0102-00			RES.,FXD,CMPSN:1K OHM,5%,0.25W	01121	CB1025
A21R61	321-0341-00			RES.,FXD,FILM:34.8K OHM,1%,0.125W	91637	MFF1816G34801F
A21R62	321-0193-00			RES.,FXD,FILM:1K OHM,1%,0.125W	91637	MFF1816G10000F
A21R63	311-1757-00			RES.,VAR,NONWIR:2.5K OHM,10%,0.50W	32997	3326H-G48-252
A21R64	315-0471-00			RES.,FXD,CMPSN:470 OHM,5%,0.25W	01121	CB4715
A21R65	321-0254-00			RES.,FXD,FILM:4.32K OHM,1%,0.125W	91637	MFF1816G43200F
A21R67	315-0102-00			RES.,FXD,CMPSN:1K OHM,5%,0.25W	01121	CB1025
A21R70	311-1267-00			RES.,VAR,NONWIR:5K OHM,10%,0.50W	32997	3329P-L58-502
A21R71	321-0334-00			RES.,FXD,FILM:29.4K OHM,1%,0.125W	91637	MFF1816G29401F
A21R72	321-0231-00			RES.,FXD,FILM:2.49K OHM,1%,0.125W	91637	MFF1816G24900F
A21R73	321-0410-00			RES.,FXD,FILM:182K OHM,1%,0.125W	91637	MFF1816G18202F
A21R75	315-0753-00			RES.,FXD,CMPSN:75K OHM,5%,0.25W	01121	CB7535
A21R76	321-0260-00			RES.,FXD,FILM:4.99K OHM,1%,0.125W	91637	MFF1816G49900F
A21R77	315-0132-00			RES.,FXD,CMPSN:1.3K OHM,5%,0.25W	01121	CB1325
A21R79	315-0473-00			RES.,FXD,CMPSN:47K OHM,5%,0.25W	01121	CB4735
A21R81	315-0103-00			RES.,FXD,CMPSN:10K OHM,5%,0.25W	01121	CB1035
A21R82	315-0391-00			RES.,FXD,CMPSN:390 OHM,5%,0.25W	01121	CB3915
A21R83	315-0101-00			RES.,FXD,CMPSN:100 OHM,5%,0.25W	01121	CB1015
A21R101	321-0283-00			RES.,FXD,FILM:8.66K OHM,1%,0.125W	91637	MFF1816G86600F
A21R102	311-1260-00			RES.,VAR,NONWIR:250 OHM,10%,0.50W	32997	3329P-L58-251
A21R103	315-0102-00			RES.,FXD,CMPSN:1K OHM,5%,0.25W	01121	CB1025
A21R104	315-0152-00			RES.,FXD,CMPSN:1.5K OHM,5%,0.25W	01121	CB1525
A21R106	315-0510-00			RES.,FXD,CMPSN:51 OHM,5%,0.25W	01121	CB5105
A21R109	321-0126-00			RES.,FXD,FILM:200 OHM,1%,0.125W	91637	MFF1816G200R0F
A21R110	321-0066-00			RES.,FXD,FILM:47.5 OHM,1%,0.125W	91637	MFF1816G47R50F
A21R111	321-0193-00			RES.,FXD,FILM:1K OHM,1%,0.125W	91637	MFF1816G10000F
A21R113	315-0101-00			RES.,FXD,CMPSN:100 OHM,5%,0.25W	01121	CB1015

http://manoman.sqhill.com

Component No.	Tektronix Part No.	Serial/Model No. Eff	Dscont	Name & Description	Mfr Code	Mfr Part Number
A21R121	321-0126-00			RES.,FXD,FILM:200 OHM,1%,0.125W	91637	MFF1816G200R0F
A21R122	321-0206-00			RES.,FXD,FILM:1.37K OHM,1%,0.125W	91637	MFF1816G13700F
A21R123	315-0272-00			RES.,FXD,CMPSN:2.7K OHM,5%,0.25W	01121	CB2725
A21R124	323-0275-00			RES.,FXD,FILM:7.15K OHM,1%,0.50W	75042	CECT0-7151F
A21R125	311-1263-00			RES.,VAR,NONWIR:1K OHM,10%,0.50W	32997	3329P-L58-102
A21R126	321-0126-00			RES.,FXD,FILM:200 OHM,1%,0.125W	91637	MFF1816G200R0F
A21R127	315-0102-00			RES.,FXD,CMPSN:1K OHM,5%,0.25W	01121	CB1025
A21R128	315-0200-00			RES.,FXD,CMPSN:20 OHM,5%,0.25W	01121	CB2005
A21R129	321-0126-00			RES.,FXD,FILM:200 OHM,1%,0.125W	91637	MFF1816G200R0F
A21R132	321-0206-00			RES.,FXD,FILM:1.37K OHM,1%,0.125W	91637	MFF1816G13700F
A21R133	315-0101-00			RES.,FXD,CMPSN:100 OHM,5%,0.25W	01121	CB1015
A21R134	315-0561-00			RES.,FXD,CMPSN:560 OHM,5%,0.25W	01121	CB5615
A21R135	311-1260-00			RES.,VAR,NONWIR:250 OHM,10%,0.50W	32997	3329P-L58-251
A21R136	315-0271-00			RES.,FXD,CMPSN:270 OHM,5%,0.25W	01121	CB2715
A21R141	315-0682-00			RES.,FXD,CMPSN:6.8K OHM,5%,0.25W	01121	CB6825
A21R142	315-0682-00			RES.,FXD,CMPSN:6.8K OHM,5%,0.25W	01121	CB6825
A21R143	315-0152-00			RES.,FXD,CMPSN:1.5K OHM,5%,0.25W	01121	CB1525
A21R150	311-0622-00			RES.,VAR,NONWIR:100 OHM,10%,0.50W	32997	3329H-G48-101
A21R155	311-0622-00			RES.,VAR,NONWIR:100 OHM,10%,0.50W	32997	3329H-G48-101
A21R156	315-0105-00			RES.,FXD,CMPSN:1M OHM,5%,0.25W	01121	CB1055
A21R161	315-0101-00			RES.,FXD,CMPSN:100 OHM,5%,0.25W	01121	CB1015
A21R162	315-0202-00			RES.,FXD,CMPSN:2K OHM,5%,0.25W	01121	CB2025
A21R166	315-0391-00			RES.,FXD,CMPSN:390 OHM,5%,0.25W	01121	CB3915
A21R167	315-0681-00			RES.,FXD,CMPSN:680 OHM,5%,0.25W	01121	CB6815
A21R168	315-0302-00			RES.,FXD,CMPSN:3K OHM,5%,0.25W	01121	CB3025
A21R169	303-0432-00			RES.,FXD,CMPSN:4.3K OHM,5%,1W	01121	GB4325
A21R171	321-0347-00			RES.,FXD,FILM:40.2K OHM,1%,0.125W	91637	MFF1816G40201F
A21R172	321-0369-00			RES.,FXD,FILM:68.1K OHM,1%,0.125W	91637	MFF1816G68101F
A21R173	315-0510-00			RES.,FXD,CMPSN:51 OHM,5%,0.25W	01121	CB5105
A21R176	301-0472-00			RES.,FXD,CMPSN:4.7K OHM,5%,0.50W	01121	EB4725
A21R177	301-0472-00			RES.,FXD,CMPSN:4.7K OHM,5%,0.50W	01121	EB4725
A21R179	323-0356-00			RES.,FXD,FILM:49.9K OHM,1%,0.50W	75042	CECT0-4992F
A21R180	321-0260-00			RES.,FXD,FILM:4.99K OHM,1%,0.125W	91637	MFF1816G49900F
A21R183	321-0097-00			RES.,FXD,FILM:100 OHM,1%,0.125W	91637	MFF1816G100R0F
A21TP32	214-0579-00			TERM,TEST POINT:BRS CD PL	80009	214-0579-00
A21TP83	214-0579-00			TERM,TEST POINT:BRS CD PL	80009	214-0579-00
A21TP103	214-0579-00			TERM,TEST POINT:BRS CD PL	80009	214-0579-00
A21TP106	214-0579-00			TERM,TEST POINT:BRS CD PL	80009	214-0579-00
A21TP122	214-0579-00			TERM,TEST POINT:BRS CD PL	80009	214-0579-00
A21TP143	214-0579-00			TERM,TEST POINT:BRS CD PL	80009	214-0579-00
A21TP183	214-0579-00			TERM,TEST POINT:BRS CD PL	80009	214-0579-00
A21TP186	214-0579-00			TERM,TEST POINT:BRS CD PL	80009	214-0579-00
A21U105	156-0251-01			MICROCIRCUIT,LI:HIGH SPEED COMPTR	80009	156-0251-01

http://manoman.sqhill.com

Component No.	Tektronix Part No.	Serial/Model No. Eff	Dscont	Name & Description	Mfr Code	Mfr Part Number
A22	----- -----			CKT BOARD ASSY:LV REGULATOR		
A22C8	290-0778-00			CAP.,FXD,ELCTLT:1UF,+50-10%,50V	54473	ECE-A50N1
A22C12	290-0778-00			CAP.,FXD,ELCTLT:1UF,+50-10%,50V	54473	ECE-A50N1
A22C13	283-0047-00			CAP.,FXD,CER DI:270PF,5%,500V	72982	0831522Z5D00271J
A22C15	281-0629-00			CAP.,FXD,CER DI:33PF,5%,600V	04222	7027-0260
A22C17	290-0778-00			CAP.,FXD,ELCTLT:1UF,+50-10%,50V	54473	ECE-A50N1
A22C24	283-0110-00			CAP.,FXD,CER DI:0.005UF,+80-20%,150V	56289	19C242B
A22C36	281-0775-00			CAP.,FXD,CER DI:0.1UF,20%,50V	72982	8005D9AABZ5U104M
A22C44	283-0067-00			CAP.,FXD,CER DI:0.001UF,10%,200V	72982	835-515B102K
A22C45	281-0511-00			CAP.,FXD,CER DI:22PF,+/-2.2PF,500V	72982	301-000C0G0220K
A22C47	290-0778-00			CAP.,FXD,ELCTLT:1UF,+50-10%,50V	54473	ECE-A50N1
A22C54	283-0110-00			CAP.,FXD,CER DI:0.005UF,+80-20%,150V	56289	19C242B
A22C64	281-0540-00			CAP.,FXD,CER DI:51PF,5%,500V	59660	301-000U2J0510J
A22C68	290-0420-00			CAP.,FXD,ELCTLT:0.68UF,20%,75V	56289	150D684X0075A2
A22C69	283-0067-00			CAP.,FXD,CER DI:0.001UF,10%,200V	72982	835-515B102K
A22C84	281-0629-00			CAP.,FXD,CER DI:33PF,5%,600V	04222	7027-0260
A22C88	290-0420-00			CAP.,FXD,ELCTLT:0.68UF,20%,75V	56289	150D684X0075A2
A22C114	281-0605-00			CAP.,FXD,CER DI:200PF,10%,500V	04222	7001-1375
A22C156	290-0745-00			CAP.,FXD,ELCTLT:22UF,+50-10%,25V	56289	502D225
A22CR7	152-0333-00			SEMICOND DEVICE:SILICON,55V,200MA	07263	FDH-6012
A22CR8	152-0333-00			SEMICOND DEVICE:SILICON,55V,200MA	07263	FDH-6012
A22CR10	152-0333-00			SEMICOND DEVICE:SILICON,55V,200MA	07263	FDH-6012
A22CR11	152-0333-00			SEMICOND DEVICE:SILICON,55V,200MA	07263	FDH-6012
A22CR13	152-0066-03			SEMICOND DEVICE:RECT,SI,400V,1A	80009	152-0066-03
A22CR15	152-0333-00			SEMICOND DEVICE:SILICON,55V,200MA	07263	FDH-6012
A22CR19	152-0141-02			SEMICOND DEVICE:SILICON,30V,150MA	01295	1N4152R
A22CR20	152-0141-02			SEMICOND DEVICE:SILICON,30V,150MA	01295	1N4152R
A22CR21	152-0141-02			SEMICOND DEVICE:SILICON,30V,150MA	01295	1N4152R
A22CR22	152-0333-00			SEMICOND DEVICE:SILICON,55V,200MA	07263	FDH-6012
A22CR28	152-0066-03			SEMICOND DEVICE:RECT,SI,400V,1A	80009	152-0066-03
A22CR45	152-0333-00			SEMICOND DEVICE:SILICON,55V,200MA	07263	FDH-6012
A22CR49	152-0141-02			SEMICOND DEVICE:SILICON,30V,150MA	01295	1N4152R
A22CR50	152-0141-02			SEMICOND DEVICE:SILICON,30V,150MA	01295	1N4152R
A22CR51	152-0141-02			SEMICOND DEVICE:SILICON,30V,150MA	01295	1N4152R
A22CR52	152-0333-00			SEMICOND DEVICE:SILICON,55V,200MA	07263	FDH-6012
A22CR58	152-0066-03			SEMICOND DEVICE:RECT,SI,400V,1A	80009	152-0066-03
A22CR64	152-0333-00			SEMICOND DEVICE:SILICON,55V,200MA	07263	FDH-6012
A22CR76	152-0066-03			SEMICOND DEVICE:RECT,SI,400V,1A	80009	152-0066-03
A22CR84	152-0333-00			SEMICOND DEVICE:SILICON,55V,200MA	07263	FDH-6012
A22CR96	152-0066-03			SEMICOND DEVICE:RECT,SI,400V,1A	80009	152-0066-03
A22CR114	152-0333-00			SEMICOND DEVICE:SILICON,55V,200MA	07263	FDH-6012
A22CR142	152-0423-00			SEMICOND DEVICE:SILICON,400V,3A	04713	1N5000
A22CR143	152-0141-02			SEMICOND DEVICE:SILICON,30V,150MA	01295	1N4152R
A22CR144	152-0423-00			SEMICOND DEVICE:SILICON,400V,3A	04713	1N5000
A22CR148	152-0141-02			SEMICOND DEVICE:SILICON,30V,150MA	01295	1N4152R
A22Q22	151-0350-00			TRANSISTOR:SILICON,PNP	04713	SPS6700
A22Q34	151-0103-00			TRANSISTOR:SILICON,NPN	80009	151-0103-00
A22Q38	151-0134-00			TRANSISTOR:SILICON,PNP	80009	151-0134-00
A22Q52	151-0347-00			TRANSISTOR:SILICON,NPN	56289	2N5551
A22Q68	151-0347-00			TRANSISTOR:SILICON,NPN	56289	2N5551
A22Q88	151-0342-00			TRANSISTOR:SILICON,PNP	07263	S035928
A22Q118	151-0302-00			TRANSISTOR:SILICON,NPN	07263	S038487
A22Q144	151-0190-05			TRANSISTOR:SILICON,NPN	80009	151-0190-05
A22Q148	151-0373-00			TRANSISTOR:SILICON,PNP	80009	151-0373-00
A22R1	321-0369-00			RES.,FXD,FILM:68.1K OHM,1%,0.125W	91637	MFF1816G68101F
A22R2	321-0386-00			RES.,FXD,FILM:102K OHM,1%,0.125W	91637	MFF1816G10202F

http://manoman.sqhill.com

Component No.	Tektronix Part No.	Serial/Model No. Eff	Dscont	Name & Description	Mfr Code	Mfr Part Number
A22R3	321-0336-00			RES.,FXD,FILM:30.9K OHM,1%,0.125W	91637	MFF1816G30901F
A22R4	321-0290-00			RES.,FXD,FILM:10.2K OHM,1%,0.125W	91637	MFF1816G10201F
A22R5	321-0319-00			RES.,FXD,FILM:20.5K OHM,1%,0.125W	91637	MFF1816G20501F
A22R8	315-0332-00			RES.,FXD,CMPSN:3.3K OHM,5%,0.25W	01121	CB3325
A22R10	323-0265-00			RES.,FXD,FILM:5.62K OHM,1%,0.50W	75042	CECT0-5621F
A22R12	315-0512-00			RES.,FXD,CMPSN:5.1K OHM,5%,0.25W	01121	CB5125
A22R13	315-0103-00			RES.,FXD,CMPSN:10K OHM,5%,0.25W	01121	CB1035
A22R14	321-0730-06			RES.,FXD,FILM:5.703K OHM,0.25%,0.125W	91637	MFF1816C57030C
A22R15	311-1225-00			RES.,VAR,NONWIR:1K OHM,20%,0.50W	32997	3386F-T04-102
A22R16	321-0331-09			RES.,FXD,FILM:27.4K OHM,1%,0.125W	91637	MFF1816C27401F
A22R17	315-0151-00			RES.,FXD,CMPSN:150 OHM,5%,0.25W	01121	CB1515
A22R21	315-0104-00			RES.,FXD,CMPSN:100K OHM,5%,0.25W	01121	CB1045
A22R22	315-0821-00			RES.,FXD,CMPSN:820 OHM,5%,0.25W	01121	CB8215
A22R24	315-0331-00			RES.,FXD,CMPSN:330 OHM,5%,0.25W	01121	CB3315
A22R25	315-0471-00			RES.,FXD,CMPSN:470 OHM,5%,0.25W	01121	CB4715
A22R26	315-0181-00			RES.,FXD,CMPSN:180 OHM,5%,0.25W	01121	CB1815
A22R27	315-0512-00			RES.,FXD,CMPSN:5.1K OHM,5%,0.25W	01121	CB5125
A22R28	308-0365-00			RES.,FXD,WW:1.5 OHM,5%,3W	91637	CW2B-1R500J
A22R32	315-0432-00			RES.,FXD,CMPSN:4.3K OHM,5%,0.25W	01121	CB4325
A22R34	304-0102-00			RES.,FXD,CMPSN:1K OHM,10%,1W	01121	GB1021
A22R36	315-0121-00			RES.,FXD,CMPSN:120 OHM,5%,0.25W	01121	CB1215
A22R37	315-0123-00			RES.,FXD,CMPSN:12K OHM,5%,0.25W	01121	CB1235
A22R38	301-0182-00			RES.,FXD,CMPSN:1.8K OHM,5%,0.5W	01121	EB1825
A22R42	315-0203-00			RES.,FXD,CMPSN:20K OHM,5%,0.25W	01121	CB2035
A22R44	315-0103-00			RES.,FXD,CMPSN:10K OHM,5%,0.25W	01121	CB1035
A22R45	321-0924-07			RES.,FXD,FILM:40K OHM,0.1%,0.125W	91637	MFF1816C40001B
A22R46	321-0924-07			RES.,FXD,FILM:40K OHM,0.1%,0.125W	91637	MFF1816C40001B
A22R47	315-0151-00			RES.,FXD,CMPSN:150 OHM,5%,0.25W	01121	CB1515
A22R51	315-0104-00			RES.,FXD,CMPSN:100K OHM,5%,0.25W	01121	CB1045
A22R52	315-0821-00			RES.,FXD,CMPSN:820 OHM,5%,0.25W	01121	CB8215
A22R54	315-0511-00			RES.,FXD,CMPSN:510 OHM,5%,0.25W	01121	CB5115
A22R55	315-0471-00			RES.,FXD,CMPSN:470 OHM,5%,0.25W	01121	CB4715
A22R56	315-0151-00			RES.,FXD,CMPSN:150 OHM,5%,0.25W	01121	CB1515
A22R57	315-0512-00			RES.,FXD,CMPSN:5.1K OHM,5%,0.25W	01121	CB5125
A22R58	308-0686-00			RES.,FXD,WW:2.2 OHM,5%,2W	75042	BWH-2R200J
A22R61	321-0332-07			RES.,FXD,FILM:28K OHM,0.1%,0.125W	91637	MFF1816C28001B
A22R62	321-1296-07			RES.,FXD,FILM:12K OHM,0.1%,0.125W	91637	MFF1816C12001B
A22R63	315-0152-00			RES.,FXD,CMPSN:1.5K OHM,5%,0.25W	01121	CB1525
A22R67	315-0123-00			RES.,FXD,CMPSN:12K OHM,5%,0.25W	01121	CB1235
A22R68	315-0302-00			RES.,FXD,CMPSN:3K OHM,5%,0.25W	01121	CB3025
A22R69	315-0822-00			RES.,FXD,CMPSN:8.2K OHM,5%,0.25W	01121	CB8225
A22R73	315-0201-00			RES.,FXD,CMPSN:200 OHM,5%,0.25W	01121	CB2015
A22R74	315-0393-00			RES.,FXD,CMPSN:39K OHM,5%,0.25W	01121	CB3935
A22R75	308-0804-00			RES.,FXD,NONWIR:0.025 OHM,5%,0.5W	80009	308-0804-00
A22R76	315-0151-00			RES.,FXD,CMPSN:150 OHM,5%,0.25W	01121	CB1515
A22R77	315-0432-00			RES.,FXD,CMPSN:4.3K OHM,5%,0.25W	01121	CB4325
A22R80	321-0924-07			RES.,FXD,FILM:40K OHM,0.1%,0.125W	91637	MFF1816C40001B
A22R81	321-1296-07			RES.,FXD,FILM:12K OHM,0.1%,0.125W	91637	MFF1816C12001B
A22R82	315-0912-00			RES.,FXD,CMPSN:9.1K OHM,5%,0.25W	01121	CB9125
A22R83	315-0102-00			RES.,FXD,CMPSN:1K OHM,5%,0.25W	01121	CB1025
A22R87	315-0123-00			RES.,FXD,CMPSN:12K OHM,5%,0.25W	01121	CB1235
A22R88	315-0302-00			RES.,FXD,CMPSN:3K OHM,5%,0.25W	01121	CB3025
A22R93	315-0201-00			RES.,FXD,CMPSN:200 OHM,5%,0.25W	01121	CB2015
A22R94	315-0393-00			RES.,FXD,CMPSN:39K OHM,5%,0.25W	01121	CB3935
A22R95	308-0804-00			RES.,FXD,NONWIR:0.025 OHM,5%,0.5W	80009	308-0804-00
A22R96	315-0151-00			RES.,FXD,CMPSN:150 OHM,5%,0.25W	01121	CB1515

http://manoman.sqhill.com

Component No.	Tektronix Part No.	Serial/Model No. Eff	Dscont	Name & Description	Mfr Code	Mfr Part Number
A22R97	315-0432-00			RES.,FXD,CMPSN:4.3K OHM,5%,0.25W	01121	CB4325
A22R113	321-1713-07			RES.,FXD,FILM:36K OHM,0.1%,0.125W	24546	NE55E3602B
A22R114	321-0926-07			RES.,FXD,FILM:4K OHM,0.1%,0.125W	91637	MFF1816C40000B
A22R121	315-0512-00			RES.,FXD,CMPSN:5.1K OHM,5%,0.25W	01121	CB5125
A22R126	315-0131-00			RES.,FXD,CMPSN:130 OHM,5%,0.25W	01121	CB1315
A22R127	315-0203-00			RES.,FXD,CMPSN:20K OHM,5%,0.25W	01121	CB2035
A22R128	315-0203-00			RES.,FXD,CMPSN:20K OHM,5%,0.25W	01121	CB2035
A22R129	315-0101-00			RES.,FXD,CMPSN:100 OHM,5%,0.25W	01121	CB1015
A22R131	315-0362-00			RES.,FXD,CMPSN:3.6K OHM,5%,0.25W	01121	CB3625
A22R132	315-0151-00			RES.,FXD,CMPSN:150 OHM,5%,0.25W	01121	CB1515
A22R133	308-0804-00			RES.,FXD,NONWIR:0.025 OHM,5%,0.5W	80009	308-0804-00
A22R134	308-0804-00			RES.,FXD,NONWIR:0.025 OHM,5%,0.5W	80009	308-0804-00
A22R135	315-0470-00			RES.,FXD,CMPSN:47 OHM,5%,0.25W	01121	CB4705
A22R136	315-0432-00			RES.,FXD,CMPSN:4.3K OHM,5%,0.25W	01121	CB4325
A22R141	315-0822-00			RES.,FXD,CMPSN:8.2K OHM,5%,0.25W	01121	CB8225
A22R142	315-0103-00			RES.,FXD,CMPSN:10K OHM,5%,0.25W	01121	CB1035
A22R143	315-0243-00			RES.,FXD,CMPSN:24K OHM,5%,0.25W	01121	CB2435
A22R144	315-0562-00			RES.,FXD,CMPSN:5.6K OHM,5%,0.25W	01121	CB5625
A22R145	315-0221-00			RES.,FXD,CMPSN:220 OHM,5%,0.25W	01121	CB2215
A22R148	308-0702-00			RES.,FXD,WW:0.33 OHM,5%,2W	75042	BWH-R3300J
A22R152	301-0561-00			RES.,FXD,CMPSN:560 OHM,5%,0.50W	01121	EB5615
A22R156	301-0431-00			RES.,FXD,CMPSN:430 OHM,5%,0.50W	01121	EB4315
A22S72	131-0993-00			BUS,CONDUCTOR:2 WIRE BLACK	00779	530153-2
A22U15	156-0067-12			MICROCIRCUIT,LI:OPERATIONAL AMPLIFIER	04713	MC1741CU
A22U45	156-0067-12			MICROCIRCUIT,LI:OPERATIONAL AMPLIFIER	04713	MC1741CU
A22U64	156-0158-03			MICROCIRCUIT,LI:DUAL OPNL AMPL,CHK	80009	156-0158-03
A22U84	156-0158-03			MICROCIRCUIT,LI:DUAL OPNL AMPL,CHK	80009	156-0158-03
A22U114	156-0158-03			MICROCIRCUIT,LI:DUAL OPNL AMPL,CHK	80009	156-0158-03
A22VR10	152-0217-00			SEMICOND DEVICE:ZENER,0.4W,8.2V,5%	04713	SZG20
A22VR12	152-0212-00			SEMICOND DEVICE:ZENER,0.5W,9V,5%	04713	SZ50646RL
A22VR17	152-0283-00			SEMICOND DEVICE:ZENER,0.4W,43V,5%	12954	DZ750903B1N976B
A22VR32	152-0281-00			SEMICOND DEVICE:ZENER,0.4W,22V,5%	12954	1N969B
A22VR36	152-0281-00			SEMICOND DEVICE:ZENER,0.4W,22V,5%	12954	1N969B
A22VR47	152-0283-00			SEMICOND DEVICE:ZENER,0.4W,43V,5%	12954	DZ750903B1N976B
A22VR152	152-0175-01			SEMICOND DEVICE:ZENER,0.4W,5.6V,5%	80009	152-0175-01
A22VR156	152-0175-01			SEMICOND DEVICE:ZENER,0.4W,5.6V,5%	80009	152-0175-01

http://manoman.sqhill.com

Component No.	Tektronix Part No.	Serial/Model No. Eff	Dscont	Name & Description	Mfr Code	Mfr Part Number
A23	----- -----			CKT BOARD ASSY:P.S. INVERTER		
A23C5	283-0022-00			CAP.,FXD,CER DI:0.02UF,1400VDCAC	91418	AU203-Z142-1RO
A23C6	283-0022-00			CAP.,FXD,CER DI:0.02UF,1400VDCAC	91418	AU203-Z142-1RO
A23C19	283-0057-00			CAP.,FXD,CER DI:0.1UF,+80-20%,200V	56289	274C10
A23C27	283-0280-00			CAP.,FXD,CER DI:2200PF,10%,2000V	56289	562CBA202EH222KA
A23C28	283-0280-00			CAP.,FXD,CER DI:2200PF,10%,2000V	56289	562CBA202EH222KA
A23C29	285-0939-00			CAP.,FXD,PLSTC:3UF,5%,400V	84411	TEK111-30594
A23C31	290-0891-00			CAP.,FXD,ELCTLT:1UF,+75-10%,50V	55680	25U1A10V-T
A23C35	283-0060-00			CAP.,FXD,CER DI:100PF,5%,200V	72982	855-535U2J101J
A23C36	283-0280-00			CAP.,FXD,CER DI:2200PF,10%,2000V	56289	562CBA202EH222KA
A23C38	283-0279-00			CAP.,FXD,CER DI:0.001UF,20%,3000V	56289	55C153
A23C39	290-0891-00			CAP.,FXD,ELCTLT:1UF,+75-10%,50V	55680	25U1A10V-T
A23C42	283-0079-00			CAP.,FXD,CER DI:0.01UF,20%,250V	72982	8151B202Y5S0103M
A23C43	290-0767-00			CAP.,FXD,ELCTLT:4.7UF,+75-10%,160V	56289	502D228
A23CR15	152-0396-01			SEMICOND DEVICE:SILICON,400V,3A	12969	652-821
A23CR32	152-0107-00			SEMICOND DEVICE:SILICON,400V,400MA	01295	G727
A23CR34	152-0400-00			SEMICOND DEVICE:SILICON,400V,1A	80009	152-0400-00
A23CR36	152-0061-00			SEMICOND DEVICE:SILICON,175V,100MA	07263	FDH2161
A23CR37	152-0061-00			SEMICOND DEVICE:SILICON,175V,100MA	07263	FDH2161
A23CR38	152-0107-00			SEMICOND DEVICE:SILICON,400V,400MA	01295	G727
A23CR40	152-0107-00			SEMICOND DEVICE:SILICON,400V,400MA	01295	G727
A23CR41	152-0400-00			SEMICOND DEVICE:SILICON,400V,1A	80009	152-0400-00
A23CR45	152-0061-00			SEMICOND DEVICE:SILICON,175V,100MA	07263	FDH2161
A23CR46	152-0581-00			SEMICOND DEVICE:SILICON,20V,1A	80009	152-0581-00
A23CR49	152-0107-00			SEMICOND DEVICE:SILICON,400V,400MA	01295	G727
A23DS19	150-0035-00			LAMP,GLOW:90V,0.3MA	53944	A1B-3
A23E8	119-0181-00			ARSR,ELEC SURGE:230V,GAS FILLED	80009	119-0181-00
A23E13	119-0181-00			ARSR,ELEC SURGE:230V,GAS FILLED	80009	119-0181-00
A23L24	108-0681-00			COIL,RF:140UH	80009	108-0681-00
A23Q30	151-0508-00			TRANSISTOR:UJT,SI,2N6027,TO-98	03508	2N6027
A23Q43	151-0347-00			TRANSISTOR:SILICON,NPN	56289	2N5551
A23Q45	151-0350-00			TRANSISTOR:SILICON,PNP	04713	SPS6700
A23Q46	151-0260-00			TRANSISTOR:SILICON,NPN	80009	151-0260-00
A23R5	304-0270-00			RES.,FXD,CMPSN:27 OHM,10%,1W	01121	GB2701
A23R8	308-0503-00			RES.,FXD,WW:6.8 OHM,5%,2.50W	91637	RS2B-D6R800J
A23R9	304-0473-00			RES.,FXD,CMPSN:47K OHM,10%,1W	01121	GB4731
A23R10	303-0184-00			RES.,FXD,CMPSN:180K OHM,5%,1W	01121	GB1845
A23R12	308-0503-00			RES.,FXD,WW:6.8 OHM,5%,2.50W	91637	RS2B-D6R800J
A23R13	304-0473-00			RES.,FXD,CMPSN:47K OHM,10%,1W	01121	GB4731
A23R19	302-0565-00			RES.,FXD,CMPSN:5.6M OHM,10%,0.50W	01121	EB5651
A23R21	304-0154-00			RES.,FXD,CMPSN:150K OHM,10%,1W	01121	GB1541
A23R25	315-0471-00			RES.,FXD,CMPSN:470 OHM,5%,0.25W	01121	CB4715
A23R31	303-0100-00			RES.,FXD,CMPSN:10 OHM,5%,1W	01121	GB1005
A23R32	315-0220-00			RES.,FXD,CMPSN:22 OHM,5%,0.25W	01121	CB2205
A23R36	315-0103-00			RES.,FXD,CMPSN:10K OHM,5%,0.25W	01121	CB1035
A23R37	301-0200-00			RES.,FXD,CMPSN:20 OHM,5%,0.50W	01121	EB2005
A23R38	315-0332-00			RES.,FXD,CMPSN:3.3K OHM,5%,0.25W	01121	CB3325
A23R39	301-0200-00			RES.,FXD,CMPSN:20 OHM,5%,0.50W	01121	EB2005
A23R40	315-0220-00			RES.,FXD,CMPSN:22 OHM,5%,0.25W	01121	CB2205
A23R41	315-0753-00			RES.,FXD,CMPSN:75K OHM,5%,0.25W	01121	CB7535
A23R42	315-0303-00			RES.,FXD,CMPSN:30K OHM,5%,0.25W	01121	CB3035
A23R43	315-0274-00			RES.,FXD,CMPSN:270K OHM,5%,0.25W	01121	CB2745
A23R44	315-0270-00			RES.,FXD,CMPSN:27 OHM,5%,0.25W	01121	CB2705
A23R45	315-0182-00			RES.,FXD,CMPSN:1.8K OHM,5%,0.25W	01121	CB1825
A23R46	315-0123-00			RES.,FXD,CMPSN:12K OHM,5%,0.25W	01121	CB1235
A23R47	301-0184-00			RES.,FXD,CMPSN:180K OHM,5%,0.50W	01121	EB1845

http://manoman.sqhill.com

Component No.	Tektronix Part No.	Serial/Model No. Eff	Dscont	Name & Description	Mfr Code	Mfr Part Number
A23RT9	307-0353-00			RES.,FXD,FILM:5 OHM,10%,DISC	15454	5DA5RO-K-270SS
A23RT13	307-0353-00			RES.,FXD,FILM:5 OHM,10%,DISC	15454	5DA5RO-K-270SS
A23T8	120-0636-00			XFMR,PWR,STPDN:LINE TRIGGER	80009	120-0636-00
A23T25	120-0743-00			XFMR,TOROID:13 TURNS,BIFILAR	80009	120-0743-00
A23T30	120-0744-00			XFMR,TOROID:5 WINDINGS	80009	120-0744-00
A23T35	120-0747-00			XFMR,TOROID:55 TURNS,SINGLE	80009	120-0747-00
A23VR38	152-0241-00			SEMICOND DEVICE:ZENER,0.4W,33V,5%	80009	152-0241-00
A23VR45	152-0428-00			SEMICOND DEVICE:ZENER,0.4W,120V,5%	80009	152-0428-00

http://manoman.sqhill.com

Component No.	Tektronix Part No.	Serial/Model No. Eff	Dscont	Name & Description	Mfr Code	Mfr Part Number
A25	----- -----			CKT BOARD ASSY:DIGITIZER		
A25C2	290-0745-00			CAP.,FXD,ELCTLT:22UF,+50-10%,25V	56289	502D225
A25C3	283-0111-00			CAP.,FXD,CER DI:0.1UF,20%,50V	72982	8121-N088Z5U104M
A25C4	290-0745-00			CAP.,FXD,ELCTLT:22UF,+50-10%,25V	56289	502D225
A25C6	290-0745-00			CAP.,FXD,ELCTLT:22UF,+50-10%,25V	56289	502D225
A25C11	283-0195-00			CAP.,FXD,CER DI:680PF,5%,50V	72982	8121N075C0G0681J
A25C12	283-0210-00			CAP.,FXD,CER DI:5600PF,10%,100V	72982	8131N145W5R562M
A25C13	283-0239-00			CAP.,FXD,CER DI:0.022UF,10%,50V	72982	8121N083X7R0223K
A25C23	281-0809-00			CAP.,FXD,CER DI:200PF,5%,100V	72982	8013T2ADDC1G201J
A25C24	283-0196-00			CAP.,FXD,CER DI:270PF,10%,50V	72982	8101B057X7R0271K
A25C30	283-0260-00			CAP.,FXD,CER DI:5.6PF,5%,200V	72982	8111B200C0G569C
A25C33	283-0158-00			CAP.,FXD,CER DI:1PF,10%,50V	72982	8101B057C0K0109B
A25C40	281-0158-00			CAP.,VAR,CER DI:7-45PF,50V	73899	DVJ-5006
A25C42	283-0140-00			CAP.,FXD,CER DI:4.7PF,5%,50V	72982	8101E003A479C
	----- -----			(NOMINAL VALUE, SELECTED)		
A25C50	283-0260-00			CAP.,FXD,CER DI:5.6PF,5%,200V	72982	8111B200C0G569C
A25C52	283-0158-00			CAP.,FXD,CER DI:1PF,10%,50V	72982	8101B057C0K0109B
	----- -----			(NOMINAL VALUE, SELECTED)		
A25C53	283-0158-00			CAP.,FXD,CER DI:1PF,10%,50V	72982	8101B057C0K0109B
A25C60	283-0251-00			CAP.,FXD,CER DI:87 PF,5%,100V	72982	8121B145C0G0870J
A25C61	281-0123-00			CAP.,VAR,CER DI:5-25PF,100V	72982	518-000A5-25
A25C62	281-0218-00			CAP.,VAR,CER DI:1-5PF,+2-2.5%,100V	72982	513013A1-5
A25C73	281-0810-00			CAP.,FXD,CER DI:5.6PF,0.5%,100V	72982	1035D2ADC0G569D
A25C84	281-0788-00			CAP.,FXD,CER DI:470PF,10%,100V	72982	8005H9AADW5R471K
A25C85	283-0177-00			CAP.,FXD,CER DI:1UF,+80-20%,25V	56289	273C5
A25C87	283-0067-00			CAP.,FXD,CER DI:0.001UF,10%,200V	72982	835-515B102K
A25C91	283-0111-00			CAP.,FXD,CER DI:0.1UF,20%,50V	72982	8121-N088Z5U104M
A25C104	283-0195-00			CAP.,FXD,CER DI:680PF,5%,50V	72982	8121N075C0G0681J
A25C105	283-0353-00			CAP.,FXD,CER DI:0.1UF,10%,50V	95275	VJ1210Y104K-H
A25C106	283-0136-00			CAP.,FXD,CER DI:10PF,5%,50V	51642	A10005O-NP0-100J
A25C114	283-0195-00			CAP.,FXD,CER DI:680PF,5%,50V	72982	8121N075C0G0681J
A25C122	283-0154-00			CAP.,FXD,CER DI:22PF,5%,50V	72982	8111B061C0G220J
A25C129	283-0111-00			CAP.,FXD,CER DI:0.1UF,20%,50V	72982	8121-N088Z5U104M
A25C133	290-0745-00			CAP.,FXD,ELCTLT:22UF,+50-10%,25V	56289	502D225
A25C134	290-0746-00			CAP.,FXD,ELCTLT:47UF,+50-10%,16V	55680	16U-47V-T
A25C135	283-0111-00			CAP.,FXD,CER DI:0.1UF,20%,50V	72982	8121-N088Z5U104M
A25C139	283-0111-00			CAP.,FXD,CER DI:0.1UF,20%,50V	72982	8121-N088Z5U104M
A25C202	290-0745-00			CAP.,FXD,ELCTLT:22UF,+50-10%,25V	56289	502D225
A25C207	281-0775-00			CAP.,FXD,CER DI:0.1UF,20%,50V	72982	8005D9AABZ5U104M
A25C221	290-0804-00			CAP.,FXD,ELCTLT:10UF,+50-10%,25V	55680	25ULA10V-T
A25C226	281-0775-00			CAP.,FXD,CER DI:0.1UF,20%,50V	72982	8005D9AABZ5U104M
A25C234	283-0203-00			CAP.,FXD,CER DI:0.47UF,20%,50V	72982	8131N075E474M
A25C235	283-0203-00			CAP.,FXD,CER DI:0.47UF,20%,50V	72982	8131N075E474M
A25C236	281-0775-00			CAP.,FXD,CER DI:0.1UF,20%,50V	72982	8005D9AABZ5U104M
A25C237	281-0775-00			CAP.,FXD,CER DI:0.1UF,20%,50V	72982	8005D9AABZ5U104M
A25C240	283-0111-00			CAP.,FXD,CER DI:0.1UF,20%,50V	72982	8121-N088Z5U104M
A25C244	283-0111-00			CAP.,FXD,CER DI:0.1UF,20%,50V	72982	8121-N088Z5U104M
A25C245	281-0218-00			CAP.,VAR,CER DI:1-5PF,+2-2.5%,100V	72982	513013A1-5
A25C246	283-0353-00			CAP.,FXD,CER DI:0.1UF,10%,50V	95275	VJ1210Y104K-H
A25C249	283-0353-00			CAP.,FXD,CER DI:0.1UF,10%,50V	95275	VJ1210Y104K-H
A25C250	283-0353-00			CAP.,FXD,CER DI:0.1UF,10%,50V	95275	VJ1210Y104K-H
A25C262	281-0138-00			CAP.,VAR,PLSTC:0.4-1.2PF,600V	74970	273-0051-001
A25C264	283-0348-00			CAP.,FXD,CER DI:0.5PF,+/-0.1PF,100V	51642	100-100-NP0-508B
	----- -----			(NOMINAL VALUE, SELECTED)		
A25C267	283-0175-00			CAP.,FXD,CER DI:10PF,5%,200V	72982	8101B210C0G0100J
A25C269	283-0111-00			CAP.,FXD,CER DI:0.1UF,20%,50V	72982	8121-N088Z5U104M

http://manoman.sqhill.com

Component No.	Tektronix Part No.	Serial/Model No. Eff	Dscont	Name & Description	Mfr Code	Mfr Part Number
A25C276	283-0111-00			CAP.,FXD,CER DI:0.1UF,20%,50V	72982	8121-N08BZ5U104M
A25C294	281-0811-00			CAP.,FXD,CER DI:10PF,10%,100V	72982	8035D2AADC1G100K
A25C296	281-0759-00			CAP.,FXD,CER DI:22PF,10%,100V	72982	8035D9AADC1G220K
A25C297	283-0111-00			CAP.,FXD,CER DI:0.1UF,20%,50V	72982	8121-N08BZ5U104M
A25C299	283-0111-00			CAP.,FXD,CER DI:0.1UF,20%,50V	72982	8121-N08BZ5U104M
A25C321	281-0775-00			CAP.,FXD,CER DI:0.1UF,20%,50V	72982	8005D9AABZ5U104M
A25C324	283-0067-00			CAP.,FXD,CER DI:0.001UF,10%,200V	72982	835-515B102K
A25C326	290-0804-00			CAP.,FXD,ELCTLT:10UF,+50-10%,25V	55680	25ULA10V-T
A25C334	283-0203-00			CAP.,FXD,CER DI:0.47UF,20%,50V	72982	8131N075E474M
A25C335	283-0203-00			CAP.,FXD,CER DI:0.47UF,20%,50V	72982	8131N075E474M
A25C336	281-0775-00			CAP.,FXD,CER DI:0.1UF,20%,50V	72982	8005D9AABZ5U104M
A25C337	281-0775-00			CAP.,FXD,CER DI:0.1UF,20%,50V	72982	8005D9AABZ5U104M
A25C340	283-0111-00			CAP.,FXD,CER DI:0.1UF,20%,50V	72982	8121-N088Z5U104M
A25C344	283-0111-00			CAP.,FXD,CER DI:0.1UF,20%,50V	72982	8121-N088Z5U104M
A25C345	281-0811-00			CAP.,FXD,CER DI:10PF,10%,100V	72982	8035D2AADC1G100K
A25C349	283-0353-00			CAP.,FXD,CER DI:0.1UF,10%,50V	95275	VJ1210Y104K-H
A25C350	283-0111-00			CAP.,FXD,CER DI:0.1UF,20%,50V	72982	8121-N088Z5U104M
A25C362	281-0123-00			CAP.,VAR,CER DI:5-25PF,100V	72982	518-000A5-25
A25C367	283-0175-00			CAP.,FXD,CER DI:10PF,5%,200V	72982	8101B210C0G0100J
A25C369	283-0111-00			CAP.,FXD,CER DI:0.1UF,20%,50V	72982	8121-N088Z5U104M
A25C376	283-0111-00			CAP.,FXD,CER DI:0.1UF,20%,50V	72982	8121-N088Z5U104M
A25C383	281-0775-00			CAP.,FXD,CER DI:0.1UF,20%,50V	72982	8005D9AABZ5U104M
A25C401	283-0111-00			CAP.,FXD,CER DI:0.1UF,20%,50V	72982	8121-N088Z5U104M
A25C402	290-0745-00			CAP.,FXD,ELCTLT:22UF,+50-10%,25V	56289	502D225
A25C403	283-0111-00			CAP.,FXD,CER DI:0.1UF,20%,50V	72982	8121-N088Z5U104M
A25C404	290-0804-00			CAP.,FXD,ELCTLT:10UF,+50-10%,25V	55680	25ULA10V-T
A25C407	290-0804-00			CAP.,FXD,ELCTLT:10UF,+50-10%,25V	55680	25ULA10V-T
A25C408	283-0111-00			CAP.,FXD,CER DI:0.1UF,20%,50V	72982	8121-N088Z5U104M
A25C409	290-0804-00			CAP.,FXD,ELCTLT:10UF,+50-10%,25V	55680	25ULA10V-T
A25C412	290-0804-00			CAP.,FXD,ELCTLT:10UF,+50-10%,25V	55680	25ULA10V-T
A25C424	290-0804-00			CAP.,FXD,ELCTLT:10UF,+50-10%,25V	55680	25ULA10V-T
A25C426	283-0111-00			CAP.,FXD,CER DI:0.1UF,20%,50V	72982	8121-N088Z5U104M
A25C427	290-0804-00			CAP.,FXD,ELCTLT:10UF,+50-10%,25V	55680	25ULA10V-T
A25C429	290-0804-00			CAP.,FXD,ELCTLT:10UF,+50-10%,25V	55680	25ULA10V-T
A25C431	283-0111-00			CAP.,FXD,CER DI:0.1UF,20%,50V	72982	8121-N088Z5U104M
A25C432	290-0804-00			CAP.,FXD,ELCTLT:10UF,+50-10%,25V	55680	25ULA10V-T
A25C433	290-0745-00			CAP.,FXD,ELCTLT:22UF,+50-10%,25V	56289	502D225
A25C434	283-0111-00			CAP.,FXD,CER DI:0.1UF,20%,50V	72982	8121-N088Z5U104M
A25C458	281-0775-00			CAP.,FXD,CER DI:0.1UF,20%,50V	72982	8005D9AABZ5U104M
A25C492	281-0775-00			CAP.,FXD,CER DI:0.1UF,20%,50V	72982	8005D9AABZ5U104M
A25C501	281-0759-00			CAP.,FXD,CER DI:22PF,10%,100V	72982	8035D9AADC1G220K
A25C506	281-0812-00			CAP.,FXD,CER DI:1000PF,10%,100V	72982	8035D9AADX7R102K
A25C507	281-0762-00			CAP.,FXD,CER DI:27PF,20%,100V	72982	8035D9AADC0G270M
A25C510	281-0775-00			CAP.,FXD,CER DI:0.1UF,20%,50V	72982	8005D9AABZ5U104M
A25C511	281-0775-00			CAP.,FXD,CER DI:0.1UF,20%,50V	72982	8005D9AABZ5U104M
A25C515	283-0348-00			CAP.,FXD,CER DI:0.5PF,+/-0.1PF,100V	51642	100-100-NP0-508B
A25C516	281-0775-00			CAP.,FXD,CER DI:0.1UF,20%,50V	72982	8005D9AABZ5U104M
A25C523	281-0772-00			CAP.,FXD,CER DI:0.0047UF,10%,100V	04222	GC701C472K
A25C533	281-0775-00			CAP.,FXD,CER DI:0.1UF,20%,50V	72982	8005D9AABZ5U104M
A25C543	281-0775-00			CAP.,FXD,CER DI:0.1UF,20%,50V	72982	8005D9AABZ5U104M
A25C546	290-0755-00			CAP.,FXD,ELCTLT:100UF,+50-10%,10V	56289	502D223
A25C547	281-0775-00			CAP.,FXD,CER DI:0.1UF,20%,50V	72982	8005D9AABZ5U104M
A25C553	281-0819-00			CAP.,FXD,CER DI:33PF,5%,50V	72982	8035BC0G330
	----- -----			(NOMINAL VALUE, SELECTED)		
A25C561	281-0811-00			CAP.,FXD,CER DI:10PF,10%,100V	72982	8035D2AADC1G100K
	----- -----			(NOMINAL VALUE, SELECTED)		

http://manoman.sqhill.com

Component No.	Tektronix Part No.	Serial/Model No. Eff	Dscont	Name & Description	Mfr Code	Mfr Part Number
A25C563	281-0775-00			CAP.,FXD,CER DI:0.1UF,20%,50V	72982	8005D9AABZ5U104M
A25C564	290-0755-00			CAP.,FXD,ELCTLT:100UF,+50-10%,10V	56289	502D223
A25C566	281-0775-00			CAP.,FXD,CER DI:0.1UF,20%,50V	72982	8005D9AABZ5U104M
A25C567	281-0775-00			CAP.,FXD,CER DI:0.1UF,20%,50V	72982	8005D9AABZ5U104M
A25C568	281-0775-00			CAP.,FXD,CER DI:0.1UF,20%,50V	72982	8005D9AABZ5U104M
A25C569	281-0775-00			CAP.,FXD,CER DI:0.1UF,20%,50V	72982	8005D9AABZ5U104M
A25C570	281-0775-00			CAP.,FXD,CER DI:0.1UF,20%,50V	72982	8005D9AABZ5U104M
A25C574	281-0762-00			CAP.,FXD,CER DI:27PF,20%,100V	72982	8035D9AADC0G270M
A25C578	281-0762-00			CAP.,FXD,CER DI:27PF,20%,100V	72982	8035D9AADC0G270M
A25C579	281-0762-00			CAP.,FXD,CER DI:27PF,20%,100V	72982	8035D9AADC0G270M
A25C583	281-0762-00			CAP.,FXD,CER DI:27PF,20%,100V	72982	8035D9AADC0G270M
A25C584	281-0762-00			CAP.,FXD,CER DI:27PF,20%,100V	72982	8035D9AADC0G270M
A25C588	281-0762-00			CAP.,FXD,CER DI:27PF,20%,100V	72982	8035D9AADC0G270M
A25C589	281-0762-00			CAP.,FXD,CER DI:27PF,20%,100V	72982	8035D9AADC0G270M
A25C593	281-0762-00			CAP.,FXD,CER DI:27PF,20%,100V	72982	8035D9AADC0G270M
A25C594	281-0762-00			CAP.,FXD,CER DI:27PF,20%,100V	72982	8035D9AADC0G270M
A25C599	281-0759-00			CAP.,FXD,CER DI:22PF,10%,100V	72982	8035D9AADC1G220K
	----- -----			(NOMINAL VALUE, SELECTED)		
A25C611	290-0755-00			CAP.,FXD,ELCTLT:100UF,+50-10%,10V	56289	502D223
A25CR118	152-0141-02			SEMICOND DEVICE:SILICON,30V,150MA	01295	1N4152R
A25CR119	152-0141-02			SEMICOND DEVICE:SILICON,30V,150MA	01295	1N4152R
A25CR226	152-0141-02			SEMICOND DEVICE:SILICON,30V,150MA	01295	1N4152R
A25CR227	152-0141-02			SEMICOND DEVICE:SILICON,30V,150MA	01295	1N4152R
A25CR231	152-0503-01			SEMICOND DEVICE:STEP RECOVERY	50434	QSRD-4866
A25CR232	152-0141-02			SEMICOND DEVICE:SILICON,30V,150MA	01295	1N4152R
A25CR242 A25CR244 A25CR245 A25CR246 A25CR247 A25CR248	119-1340-00			DIODE BRIDGE:4 MTCHD QUAD & 2 MTCHD QUAD	80009	119-1340-00
A25CR283	152-0141-02			SEMICOND DEVICE:SILICON,30V,150MA	01295	1N4152R
A25CR289	152-0141-02			SEMICOND DEVICE:SILICON,30V,150MA	01295	1N4152R
A25CR296	152-0141-02			SEMICOND DEVICE:SILICON,30V,150MA	01295	1N4152R
A25CR315	152-0141-02			SEMICOND DEVICE:SILICON,30V,150MA	01295	1N4152R
A25CR326	152-0141-02			SEMICOND DEVICE:SILICON,30V,150MA	01295	1N4152R
A25CR327	152-0141-02			SEMICOND DEVICE:SILICON,30V,150MA	01295	1N4152R
A25CR331	152-0503-01			SEMICOND DEVICE:STEP RECOVERY	50434	QSRD-4866
A25CR332	152-0141-02			SEMICOND DEVICE:SILICON,30V,150MA	01295	1N4152R
A25CR342 A25CR344 A25CR345 A25CR346 A25CR347 A25CR348	119-1340-00			DIODE BRIDGE:4 MTCHD QUAD & 2 MTCHD QUAD	80009	119-1340-00
A25CR383	152-0141-02			SEMICOND DEVICE:SILICON,30V,150MA	01295	1N4152R
A25CR491	152-0141-02			SEMICOND DEVICE:SILICON,30V,150MA	01295	1N4152R
A25CR492	152-0141-02			SEMICOND DEVICE:SILICON,30V,150MA	01295	1N4152R
A25DL211	119-0400-00			DELAY LINE,ELEC:100 OHM,14LD,DIP	01961	PF20350
A25L2	108-0509-00			COIL,RF:2.45UH	80009	108-0509-00
A25L4	108-0509-00			COIL,RF:2.45UH	80009	108-0509-00
A25L6	108-0509-00			COIL,RF:2.45UH	80009	108-0509-00
A25L94	120-0302-00	B010100	B010150	XFMR,TOROID:5 TURNS,SINGLE	80009	120-0302-00
A25L94	108-1032-00	B010151		COIL,RF:FIXED,244UH	80009	108-1032-00
A25L103	108-0683-00			COIL,RF:900MH	80009	108-0683-00
A25L133	108-0598-00			COIL,RF:200UH	80009	108-0598-00

http://manoman.sqhill.com

Component No.	Tektronix Part No.	Serial/Model No. Eff	Dscont	Name & Description	Mfr Code	Mfr Part Number
A25L134	108-0509-00			COIL,RF:2.45UH	80009	108-0509-00
A25L510	108-0245-00			COIL,RF:3.9UH	76493	B6310-1
A25L546	108-0245-00			COIL,RF:3.9UH	76493	B6310-1
A25L564	108-0245-00			COIL,RF:3.9UH	76493	B6310-1
A25L565	108-0245-00			COIL,RF:3.9UH	76493	B6310-1
A25LR113	108-0729-00			COIL,RF:195NH	80009	108-0729-00
A25LR201	108-0537-00			COIL,RF:200UH	80009	108-0537-00
A25LR401	108-0537-00			COIL,RF:200UH	80009	108-0537-00
A25LR403	108-0537-00			COIL,RF:200UH	80009	108-0537-00
A25LR406	108-0537-00			COIL,RF:200UH	80009	108-0537-00
A25LR408	108-0537-00			COIL,RF:200UH	80009	108-0537-00
A25LR411	108-0537-00			COIL,RF:200UH	80009	108-0537-00
A25LR421	108-0537-00			COIL,RF:200UH	80009	108-0537-00
A25LR423	108-0537-00			COIL,RF:200UH	80009	108-0537-00
A25LR426	108-0537-00			COIL,RF:200UH	80009	108-0537-00
A25LR428	108-0537-00			COIL,RF:200UH	80009	108-0537-00
A25LR431	108-0537-00			COIL,RF:200UH	80009	108-0537-00
A25Q93	151-0190-05			TRANSISTOR:SILICON,NPN	80009	151-0190-05
A25Q94	151-0301-00			TRANSISTOR:SILICON,PNP	27014	2N2907A
A25Q95	151-0301-00			TRANSISTOR:SILICON,PNP	27014	2N2907A
A25Q104	151-0427-00			TRANSISTOR:SILICON,NPN	80009	151-0427-00
A25Q105	151-0450-00			TRANSISTOR:SILICON,PNP,SEL FROM 2N5583	80009	151-0450-00
A25Q115	151-0427-00			TRANSISTOR:SILICON,NPN	80009	151-0427-00
A25Q125	151-0302-00			TRANSISTOR:SILICON,NPN	07263	S038487
A25Q206	151-0220-00			TRANSISTOR:SILICON,PNP	07263	S036228
A25Q207	151-0220-00			TRANSISTOR:SILICON,PNP	07263	S036228
A25Q222	151-0190-05			TRANSISTOR:SILICON,NPN	80009	151-0190-05
A25Q223	151-0190-05			TRANSISTOR:SILICON,NPN	80009	151-0190-05
A25Q227	151-0450-00			TRANSISTOR:SILICON,PNP,SEL FROM 2N5583	80009	151-0450-00
A25Q250	151-1117-00			TRANSISTOR:SILICON,FE,DUAL,N-CHANNEL	22229	MD1000
A25Q251	151-0190-05			TRANSISTOR:SILICON,NPN	80009	151-0190-05
A25Q252	151-0190-05			TRANSISTOR:SILICON,NPN	80009	151-0190-05
A25Q256	151-0190-05			TRANSISTOR:SILICON,NPN	80009	151-0190-05
A25Q262	151-0139-01			TRANSISTOR:SILICON,NPN	04713	SD3179
A25Q263	151-0220-00			TRANSISTOR:SILICON,PNP	07263	S036228
A25Q273	151-0220-00			TRANSISTOR:SILICON,PNP	07263	S036228
A25Q284	151-0333-00			TRANSISTOR:SILICON,NPN,SEL FROM MPS918	04713	SPS1752
A25Q285	151-0139-01			TRANSISTOR:SILICON,NPN	04713	SD3179
A25Q286	151-0333-00			TRANSISTOR:SILICON,NPN,SEL FROM MPS918	04713	SPS1752
A25Q296	151-0220-00			TRANSISTOR:SILICON,PNP	07263	S036228
A25Q311	151-0190-05			TRANSISTOR:SILICON,NPN	80009	151-0190-05
A25Q322	151-0190-05			TRANSISTOR:SILICON,NPN	80009	151-0190-05
A25Q323	151-0190-05			TRANSISTOR:SILICON,NPN	80009	151-0190-05
A25Q327	151-0450-00			TRANSISTOR:SILICON,PNP,SEL FROM 2N5583	80009	151-0450-00
A25Q350	151-1117-00			TRANSISTOR:SILICON,FE,DUAL,N-CHANNEL	22229	MD1000
A25Q351	151-0190-05			TRANSISTOR:SILICON,NPN	80009	151-0190-05
A25Q352	151-0190-05			TRANSISTOR:SILICON,NPN	80009	151-0190-05
A25Q356	151-0190-05			TRANSISTOR:SILICON,NPN	80009	151-0190-05
A25Q362	151-0139-01			TRANSISTOR:SILICON,NPN	04713	SD3179
A25Q363	151-0220-00			TRANSISTOR:SILICON,PNP	07263	S036228
A25Q373	151-0220-00			TRANSISTOR:SILICON,PNP	07263	S036228
A25Q384	151-0333-00			TRANSISTOR:SILICON,NPN,SEL FROM MPS918	04713	SPS1752
A25Q385	151-0139-01			TRANSISTOR:SILICON,NPN	04713	SD3179
A25Q452	151-0220-00			TRANSISTOR:SILICON,PNP	07263	S036228
A25Q453	151-0220-00			TRANSISTOR:SILICON,PNP	07263	S036228
A25Q485	151-0333-00			TRANSISTOR:SILICON,NPN,SEL FROM MPS918	04713	SPS1752

http://manoman.sqhill.com

Component No.	Tektronix Part No.	Serial/Model No. Eff	Dscont	Name & Description	Mfr Code	Mfr Part Number
A25Q487	151-0333-00			TRANSISTOR:SILICON,NPN,SEL FROM MPS918	04713	SPS1752
A25Q493	151-0190-05			TRANSISTOR:SILICON,NPN	80009	151-0190-05
A25Q513	151-0190-05			TRANSISTOR:SILICON,NPN	80009	151-0190-05
A25Q514	151-0190-05			TRANSISTOR:SILICON,NPN	80009	151-0190-05
A25Q556	151-0188-03			TRANSISTOR:SILICON,PNP,SEL	80009	151-0188-03
A25R3	315-0101-00			RES.,FXD,CMPSN:100 OHM,5%,0.25W	01121	CB1015
A25R11	311-0607-00			RES.,VAR,NONWIR:10K OHM,10%,0.50W	73138	82-25-2
A25R12	311-0607-00			RES.,VAR,NONWIR:10K OHM,10%,0.50W	73138	82-25-2
A25R13	311-0644-00			RES.,VAR,NONWIR:20K OHM,10%,0.50W	73138	82-34-1
A25R19	321-0260-00			RES.,FXD,FILM:4.99K OHM,1%,0.125W	91637	MFF1816G49900F
A25R20	321-0260-00			RES.,FXD,FILM:4.99K OHM,1%,0.125W	91637	MFF1816G49900F
A25R21	321-0289-00			RES.,FXD,FILM:10K OHM,1%,0.125W	91637	MFF1816G10001F
A25R22	321-0244-00			RES.,FXD,FILM:3.4K OHM,1%,0.125W	91637	MFF1816G34000F
A25R23	317-0272-00			RES.,FXD,CMPSN:2.7K OHM,5%,0.125W	01121	BB2725
A25R24	317-0470-00			RES.,FXD,CMPSN:47 OHM,5%,0.125W	01121	BB4705
A25R30	317-0620-00			RES.,FXD,CMPSN:62 OHM,5%,0.125W	01121	BB6205
A25R31	321-0052-00			RES.,FXD,FILM:34 OHM,1%,0.125W	91637	MFF1816G34R00F
A25R32	317-0200-00			RES.,FXD,CMPSN:20 OHM,5%,0.125W	01121	BB2005
	----- -----			(NOMINAL VALUE, SELECTED)		
A25R33	317-0360-00			RES.,FXD,CMPSN:36 OHM,5%,0.125W	01121	BB3605
A25R34	325-0334-00			RES.,FXD,FILM:16.2 OHM,1%,0.05W	14298	RE1/816.2C-01%
A25R37	317-0510-00			RES.,FXD,CMPSN:51 OHM,5%,0.125W	01121	BB5105
A25R39	323-0094-00			RES.,FXD,FILM:93.1 OHM,1%,0.50W	75042	CECT0-93R10F
A25R40	311-1261-00			RES.,VAR,NONWIR:500 OHM,10%,0.50W	32997	3329P-L58-501
A25R43	SELECTED					
A25R50	317-0620-00			RES.,FXD,CMPSN:62 OHM,5%,0.125W	01121	BB6205
A25R51	321-0052-00			RES.,FXD,FILM:34 OHM,1%,0.125W	91637	MFF1816G34R00F
A25R53	317-0360-00			RES.,FXD,CMPSN:36 OHM,5%,0.125W	01121	BB3605
A25R54	325-0334-00			RES.,FXD,FILM:162. OHM,1%,0.05W	14298	RE1/816.2C-01%
A25R57	317-0510-00			RES.,FXD,CMPSN:51 OHM,5%,0.125W	01121	BB5105
A25R59	323-0094-00			RES.,FXD,FILM:93.1 OHM,1%,0.50W	75042	CECT0-93R10F
A25R60	311-1265-00			RES.,VAR,NONWIR:2K OHM,10%,0.50W	32997	3329P-L58-202
A25R61	311-0622-01			RES.,VAR,NONWIR:100 OHM,10%,0.50W	32997	3326H-K28-101
A25R63	SELECTED					
A25R71	321-0399-00			RES.,FXD,FILM:140K OHM,1%,0.125W	91637	MFF1816G14002F
A25R72	315-0163-00			RES.,FXD,CMPSN:16K OHM,5%,0.25W	01121	CB1635
A25R73	321-0318-00			RES.,FXD,FILM:20K OHM,1%,0.125W	91637	MFF1816G20001F
A25R77	321-0289-00			RES.,FXD,FILM:10K OHM,1%,0.125W	91637	MFF1816G10001F
A25R79	321-0281-07			RES.,FXD,FILM:8.25K OHM,0.10%,0.125W	91637	MFF1816C82500B
A25R80	311-1259-00			RES.,VAR,NONWIR:100 OHM,10%,0.50W	32997	3329P-L58-101
A25R81	321-1686-07			RES.,FXD,FILM:10.97K OHM,0.1%,0.125W	91637	MFF1816C10971B
A25R85	315-0101-00			RES.,FXD,CMPSN:100 OHM,5%,0.25W	01121	CB1015
A25R86	315-0331-00			RES.,FXD,CMPSN:330 OHM,5%,0.25W	01121	CB3315
A25R87	315-0122-00			RES.,FXD,CMPSN:1.2K OHM,5%,0.25W	01121	CB1225
A25R91	323-0001-01			RES.,FXD,FILM:10 OHM,0.5%,0.50W	75042	CECT0-20R00D
A25R92	321-0274-00			RES.,FXD,FILM:6.98K OHM,1%,0.125W	91637	MFF1816G69800F
A25R93	315-0622-00			RES.,FXD,CMPSN:6.2K OHM,5%,0.25W	01121	CB6225
A25R103	323-0066-00			RES.,FXD,FILM:47.5 OHM,1%,0.50W	75042	CECT0-47R50F
A25R105	304-0101-00			RES.,FXD,CMPSN:100 OHM,10%,1W	01121	GB1011
A25R106	317-0270-00			RES.,FXD,CMPSN:27 OHM,5%,0.125W	01121	BB2705
A25R108	317-0201-00			RES.,FXD,CMPSN:200 OHM,5%,0.125W	01121	BB2015
A25R109	317-0471-00			RES.,FXD,CMPSN:470 OHM,5%,0.125W	01121	BB4715
A25R114	317-0330-00			RES.,FXD,CMPSN:33 OHM,5%,0.125W	01121	BB3305
A25R115	321-0222-00			RES.,FXD,FILM:2K OHM,1%,0.125W	91637	MFF1816G20000F
A25R117	321-0181-00			RES.,FXD,FILM:750 OHM,1%,0.125W	91637	MFF1816G750R0F
A25R118	321-0190-00			RES.,FXD,FILM:931 OHM,1%,0.125W	91637	MFF1816G931R0F

http://manoman.sqhill.com

Component No.	Tektronix Part No.	Serial/Model No. Eff	Dscont	Name & Description	Mfr Code	Mfr Part Number
A25R122	317-0470-00			RES.,FXD,CMPSN:47 OHM,5%,0.125W	01121	BB4705
A25R124	321-0218-00			RES.,FXD,FILM:1.82K OHM,1%,0.125W	91637	MFF1816G18200F
A25R125	321-0138-00			RES.,FXD,FILM:267 OHM,1%,0.125W	91637	MFF1816G267R0F
A25R126	301-0470-00			RES.,FXD,CMPSN:47 OHM,5%,0.50W	01121	EB4705
A25R127	315-0120-00			RES.,FXD,CMPSN:12 OHM,5%,0.25W	01121	CB1205
A25R133	307-0103-00			RES.,FXD,CMPSN:2.7 OHM,5%,0.25W	01121	CB27G5
A25R135	315-0101-00			RES.,FXD,CMPSN:100 OHM,5%,0.25W	01121	CB1015
A25R137	321-0133-00			RES.,FXD,FILM:237 OHM,1%,0.125W	91637	MFF1816G237R0F
A25R138	321-0189-00			RES.,FXD,FILM:909 OHM,1%,0.125W	91637	MFF1816G909R0F
A25R139	321-0037-00			RES.,FXD,FILM:23.7 OHM,1%,0.125W	91637	MFF1816G23R70F
A25R202	315-0102-00			RES.,FXD,CMPSN:1K OHM,5%,0.25W	01121	CB1025
A25R203	315-0101-00			RES.,FXD,CMPSN:100 OHM,5%,0.25W	01121	CB1015
A25R206	315-0202-00			RES.,FXD,CMPSN:2K OHM,5%,0.25W	01121	CB2025
A25R207	315-0122-00			RES.,FXD,CMPSN:1.2K OHM,5%,0.25W	01121	CB1225
A25R208	315-0121-00			RES.,FXD,CMPSN:120 OHM,5%,0.25W	01121	CB1215
A25R211	315-0472-00			RES.,FXD,CMPSN:4.7K OHM,5%,0.25W	01121	CB4725
A25R212	315-0101-00			RES.,FXD,CMPSN:100 OHM,5%,0.25W	01121	CB1015
A25R221	315-0201-00			RES.,FXD,CMPSN:200 OHM,5%,0.25W	01121	CB2015
A25R222	301-0681-00			RES.,FXD,CMPSN:680 OHM,5%,0.50W	01121	EB6815
A25R226	315-0561-00			RES.,FXD,CMPSN:560 OHM,5%,0.25W	01121	CB5615
A25R227	301-0131-00	B010100	B010150	RES.,FXD,CMPSN:130 OHM,5%,0.50W	01121	EB1315
A25R227	301-0181-00	B010151		RES.,FXD,CMPSN:180 OHM,5%,0.50W	01121	EB1815
A25R228	311-0978-00	B010100	B010150	RES.,VAR,NONWIR:250 OHM,10%,0.50W	73138	82-4-2
A25R228	311-0635-00	B010151		RES.,VAR,NONWIR:1K OHM,10%,0.50W	73138	82-32-0
A25R231	301-0511-00			RES.,FXD,CMPSN:510 OHM,5%,0.50W	01121	EB5115
A25R232	321-0771-01			RES.,FXD,FILM:50 OHM,0.5%,0.125W	91637	MFF1816G50R00D
A25R233	321-0771-01			RES.,FXD,FILM:50 OHM,0.5%,0.125W	91637	MFF1816G50R00D
A25R236	315-0103-00			RES.,FXD,CMPSN:10K OHM,5%,0.25W	01121	CB1035
A25R237	315-0103-00			RES.,FXD,CMPSN:10K OHM,5%,0.25W	01121	CB1035
A25R240	317-0102-00			RES.,FXD,CMPSN:1K OHM,5%,0.125W	01121	BB1025
A25R241	317-0390-00			RES.,FXD,CMPSN:39 OHM,5%,0.125W	01121	BB3905
A25R243	317-0390-00			RES.,FXD,CMPSN:39 OHM,5%,0.125W	01121	BB3905
A25R244	317-0102-00			RES.,FXD,CMPSN:1K OHM,5%,0.125W	01121	BB1025
A25R245	325-0044-00			RES.,FXD,FILM:100 OHM,0.5%,0.05W	03888	PME50-F1000R0D
A25R246	323-0097-03			RES.,FXD,FILM:100 OHM,0.25%,0.50W	75042	CECT2-1000C
A25R247	317-0200-00			RES.,FXD,CMPSN:20 OHM,5%,0.125W	01121	BB2005
A25R248	317-0241-00			RES.,FXD,CMPSN:240 OHM,5%,0.125W	01121	BB2415
	----- -----			(NOMINAL VALUE, SELECTED)		
A25R249	315-0511-00			RES.,FXD,CMPSN:510 OHM,5%,0.25W	01121	CB5115
A25R250	SELECTED					
A25R251	321-0230-00			RES.,FXD,FILM:2.43K OHM,1%,0.125W	91637	MFF1816G24300F
A25R252	321-0224-00			RES.,FXD,FILM:2.1K OHM,1%,0.125W	91637	MFF1816G21000F
A25R253	321-0188-00			RES.,FXD,FILM:887 OHM,1%,0.125W	91637	MFF1816G887R0F
A25R254	321-0188-00			RES.,FXD,FILM:887 OHM,1%,0.125W	91637	MFF1816G887R0F
A25R255	317-0101-00			RES.,FXD,CMPSN:100 OHM,5%,0.125W	01121	BB1015
A25R256	321-0265-00			RES.,FXD,FILM:5.62K OHM,1%,0.125W	91637	MFF1816G56200F
A25R257	321-0233-00			RES.,FXD,FILM:2.61K OHM,1%,0.125W	91637	MFF1816G26100F
A25R258	321-0192-00			RES.,FXD,FILM:976 OHM,1%,0.125W	91637	MFF1816G976R0F
A25R262	321-0259-00			RES.,FXD,FILM:4.87K OHM,1%,0.125W	91637	MFF1816G48700F
A25R264	321-0165-00			RES.,FXD,FILM:511 OHM,1%,0.125W	91637	MFF1816G511R0F
A25R266	315-0302-00			RES.,FXD,CMPSN:3K OHM,5%,0.25W	01121	CB3025
A25R267	315-0202-00			RES.,FXD,CMPSN:2K OHM,5%,0.25W	01121	CB2025
A25R269	315-0911-00			RES.,FXD,CMPSN:910 OHM,5%,0.25W	01121	CB9115
A25R272	321-0259-00			RES.,FXD,FILM:4.87K OHM,1%,0.125W	91637	MFF1816G48700F
A25R273	317-0101-00			RES.,FXD,CMPSN:100 OHM,5%,0.125W	01121	BB1015
A25R274	321-0165-00			RES.,FXD,FILM:511 OHM,1%,0.125W	91637	MFF1816G511R0F

http://manoman.sqhill.com

Component No.	Tektronix Part No.	Serial/Model No. Eff	Dscont	Name & Description	Mfr Code	Mfr Part Number
A25R276	315-0302-00			RES.,FXD,CMPSN:3K OHM,5%,0.25W	01121	CB3025
A25R279	315-0301-00			RES.,FXD,CMPSN:300 OHM,5%,0.25W	01121	CB3015
A25R280	311-1757-00			RES.,VAR,NONWIR:2.5K OHM,10%,0.50W	32997	3326H-G48-252
A25R281	315-0512-00			RES.,FXD,CMPSN:5.1K OHM,5%,0.25W	01121	CB5125
A25R283	315-0622-00			RES.,FXD,CMPSN:6.2K OHM,5%,0.25W	01121	CB6225
A25R284	321-0177-00			RES.,FXD,FILM:681 OHM,1%,0.125W	91637	MFF1816G681R0F
A25R285	317-0101-00			RES.,FXD,CMPSN:100 OHM,5%,0.125W	01121	BB1015
A25R286	315-0681-00			RES.,FXD,CMPSN:680 OHM,5%,0.25W	01121	CB6815
A25R289	321-0288-00			RES.,FXD,FILM:9.76K OHM,1%,0.125W	91637	MFF1816G97600F
A25R290	311-0622-01			RES.,VAR,NONWIR:100 OHM,10%,0.50W	32997	3326H-K28-101
A25R291	315-0241-00			RES.,FXD,CMPSN:240 OHM,5%,0.25W	01121	CB2415
A25R292	321-0290-00			RES.,FXD,FILM:10.2K OHM,1%,0.125W	91637	MFF1816G10201F
A25R294	315-0821-00			RES.,FXD,CMPSN:820 OHM,5%,0.25W	01121	CB8215
A25R297	315-0470-00			RES.,FXD,CMPSN:47 OHM,5%,0.25W	01121	CB4705
A25R299	315-0242-00			RES.,FXD,CMPSN:2.4K OHM,5%,0.25W	01121	CB2425
A25R311	315-0751-00			RES.,FXD,CMPSN:750 OHM,5%,0.25W	01121	CB7515
A25R313	315-0101-00			RES.,FXD,CMPSN:100 OHM,5%,0.25W	01121	CB1015
A25R315	315-0132-00			RES.,FXD,CMPSN:1.3K OHM,5%,0.25W	01121	CB1325
A25R319	315-0101-00			RES.,FXD,CMPSN:100 OHM,5%,0.25W	01121	CB1015
A25R321	315-0201-00			RES.,FXD,CMPSN:200 OHM,5%,0.25W	01121	CB2015
A25R322	301-0681-00			RES.,FXD,CMPSN:680 OHM,5%,0.50W	01121	EB6815
A25R324	315-0331-00			RES.,FXD,CMPSN:330 OHM,5%,0.25W	01121	CB3315
A25R326	315-0561-00			RES.,FXD,CMPSN:560 OHM,5%,0.25W	01121	CB5615
A25R327	301-0181-00			RES.,FXD,CMPSN:180 OHM,5%,0.50W	01121	EB1815
A25R328	311-0978-00	B010100	B010150	RES.,VAR,NONWIR:250 OHM,10%,0.50W	73138	82-4-2
A25R328	311-0635-00	B010151		RES.,VAR,NONWIR:1K OHM,10%,0.50W	73138	82-32-0
A25R331	301-0511-00			RES.,FXD,CMPSN:510 OHM,5%,0.50W	01121	EB5115
A25R332	321-0771-01			RES.,FXD,FILM:50 OHM,0.5%,0.125W	91637	MFF1816G50R00D
A25R333	321-0771-01			RES.,FXD,FILM:50 OHM,0.5%,0.125W	91637	MFF1816G50R00D
A25R336	315-0103-00			RES.,FXD,CMPSN:10K OHM,5%,0.25W	01121	CB1035
A25R337	315-0103-00			RES.,FXD,CMPSN:10K OHM,5%,0.25W	01121	CB1035
A25R340	317-0102-00			RES.,FXD,CMPSN:1K OHM,5%,0.125W	01121	BB1025
A25R341	317-0390-00			RES.,FXD,CMPSN:39 OHM,5%,0.125W	01121	BB3905
A25R343	317-0390-00			RES.,FXD,CMPSN:39 OHM,5%,0.125W	01121	BB3905
A25R344	317-0102-00			RES.,FXD,CMPSN:1K OHM,5%,0.125W	01121	BB1025
A25R345	325-0027-00			RES.,FXD,FILM:93 OHM,1%,0.5W	03888	AME50-E93R00F
A25R347	317-0100-00			RES.,FXD,CMPSN:10 OHM,5%,0.125W	01121	BB1005
A25R349	315-0511-00			RES.,FXD,CMPSN:510 OHM,5%,0.25W	01121	CB5115
A25R350	317-0100-00			RES.,FXD,CMPSN:10 OHM,5%,0.125W	01121	BB1005
A25R351	321-0230-00			RES.,FXD,FILM:2.43K OHM,1%,0.125W	91637	MFF1816G24300F
A25R352	321-0224-00			RES.,FXD,FILM:2.1K OHM,1%,0.125W	91637	MFF1816G21000F
A25R353	321-0188-00			RES.,FXD,FILM:887 OHM,1%,0.125W	91637	MFF1816G887R0F
A25R354	321-0188-00			RES.,FXD,FILM:887 OHM,1%,0.125W	91637	MFF1816G887R0F
A25R355	317-0101-00			RES.,FXD,CMPSN:100 OHM,5%,0.125W	01121	BB1015
A25R356	321-0265-00			RES.,FXD,FILM:5.62K OHM,1%,0.125W	91637	MFF1816G56200F
A25R357	321-0233-00			RES.,FXD,FILM:2.61K OHM,1%,0.125W	91637	MFF1816G26100F
A25R358	321-0192-00			RES.,FXD,FILM:976 OHM,1%,0.125W	91637	MFF1816G976R0F
A25R362	321-0259-00			RES.,FXD,FILM:4.87K OHM,1%,0.125W	91637	MFF1816G48700F
A25R364	321-0165-00			RES.,FXD,FILM:511 OHM,1%,0.125W	91637	MFF1816G511R0F
A25R366	315-0302-00			RES.,FXD,CMPSN:3K OHM,5%,0.25W	01121	CB3025
A25R367	315-0202-00			RES.,FXD,CMPSN:2K OHM,5%,0.25W	01121	CB2025
A25R369	315-0911-00			RES.,FXD,CMPSN:910 OHM,5%,0.25W	01121	CB9115
A25R372	321-0259-00			RES.,FXD,FILM:4.87K OHM,1%,0.125W	91637	MFF1816G48700F
A25R373	317-0101-00			RES.,FXD,CMPSN:100 OHM,5%,0.125W	01121	BB1015
A25R374	321-0165-00			RES.,FXD,FILM:511 OHM,1%,0.125W	91637	MFF1816G511R0F
A25R376	315-0302-00			RES.,FXD,CMPSN:3K OHM,5%,0.25W	01121	CB3025

http://manoman.sqhill.com

Component No.	Tektronix Part No.	Serial/Model No. Eff	Dscont	Name & Description	Mfr Code	Mfr Part Number
A25R379	315-0301-00			RES.,FXD,CMPSN:300 OHM,5%,0.25W	01121	CB3015
A25R380	311-1225-00			RES.,VAR,NONWIR:1K OHM,20%,0.50W	32997	3386F-T04-102
A25R381	315-0302-00			RES.,FXD,CMPSN:3K OHM,5%,0.25W	01121	CB3025
A25R383	315-0332-00			RES.,FXD,CMPSN:3.3K OHM,5%,0.25W	01121	CB3325
A25R384	317-0101-00			RES.,FXD,CMPSN:100 OHM,5%,0.125W	01121	BB1015
A25R385	315-0101-00			RES.,FXD,CMPSN:100 OHM,5%,0.25W	01121	CB1015
A25R451	315-0101-00			RES.,FXD,CMPSN:100 OHM,5%,0.25W	01121	CB1015
A25R452	315-0103-00			RES.,FXD,CMPSN:10K OHM,5%,0.25W	01121	CB1035
A25R454	315-0122-00			RES.,FXD,CMPSN:1.2K OHM,5%,0.25W	01121	CB1225
A25R455	315-0121-00			RES.,FXD,CMPSN:120 OHM,5%,0.25W	01121	CB1215
A25R458	315-0202-00			RES.,FXD,CMPSN:2K OHM,5%,0.25W	01121	CB2025
A25R459	315-0202-00			RES.,FXD,CMPSN:2K OHM,5%,0.25W	01121	CB2025
A25R485	321-0109-00			RES.,FXD,FILM:133 OHM,1%,0.125W	91637	MFF1816G133R0F
A25R487	321-0105-00			RES.,FXD,FILM:121 OHM,1%,0.125W	91637	MFF1816G121R0F
A25R491	321-0323-00			RES.,FXD,FILM:22.6K OHM,1%,0.125W	91637	MFF1816G22601F
A25R492	321-0264-00			RES.,FXD,FILM:5.49K OHM,1%,0.125W	91637	MFF1816G54900F
A25R493	321-0222-00			RES.,FXD,FILM:2K OHM,1%,0.125W	91637	MFF1816G20000F
A25R501	315-0471-00			RES.,FXD,CMPSN:470 OHM,5%,0.25W	01121	CB4715
A25R502	315-0334-00			RES.,FXD,CMPSN:330K OHM,5%,0.25W	01121	CB3345
A25R503	321-0193-00			RES.,FXD,FILM:1K OHM,1%,0.125W	91637	MFF1816G10000F
A25R504	321-0409-00			RES.,FXD,FILM:178K OHM,1%,0.125W	91637	MFF1816G17802F
A25R506	315-0332-00			RES.,FXD,CMPSN:3.3K OHM,5%,0.25W	01121	CB3325
A25R507	315-0202-00			RES.,FXD,CMPSN:2K OHM,5%,0.25W	01121	CB2025
A25R509	315-0101-00			RES.,FXD,CMPSN:100 OHM,5%,0.25W	01121	CB1015
A25R513	315-0201-00			RES.,FXD,CMPSN:200 OHM,5%,0.25W	01121	CB2015
A25R514	315-0201-00			RES.,FXD,CMPSN:200 OHM,5%,0.25W	01121	CB2015
A25R515	311-1261-00			RES.,VAR,NONWIR:500 OHM,10%,0.50W	32997	3329P-L58-501
A25R516	315-0152-00			RES.,FXD,CMPSN:1.5K OHM,5%,0.25W	01121	CB1525
A25R517	315-0621-00			RES.,FXD,CMPSN:620 OHM,5%,0.25W	01121	CB6215
A25R523	315-0103-00			RES.,FXD,CMPSN:10K OHM,5%,0.25W	01121	CB1035
A25R532	315-0152-00			RES.,FXD,CMPSN:1.5K OHM,5%,0.25W	01121	CB1525
A25R537	321-0664-00			RES.,FXD,FILM:1.56K OHM,0.5%,0.125W	91637	MFF1816D15600D
A25R538	321-0300-00			RES.,FXD,FILM:13K OHM,1%,0.125W	91637	MFF1816G13001F
A25R541	315-0102-00			RES.,FXD,CMPSN:1K OHM,5%,0.25W	01121	CB1025
A25R542	321-0209-00			RES.,FXD,FILM:1.47K OHM,1%,0.125W	91637	MFF1816G14700F
A25R546	315-0270-00			RES.,FXD,CMPSN:27 OHM,5%,0.25W	01121	CB2705
A25R547	315-0270-00			RES.,FXD,CMPSN:27 OHM,5%,0.25W	01121	CB2705
A25R553	315-0471-00			RES.,FXD,CMPSN:470 OHM,5%,0.25W	01121	CB4715
A25R556	315-0221-00			RES.,FXD,CMPSN:220 OHM,5%,0.25W	01121	CB2215
A25R557	315-0471-00			RES.,FXD,CMPSN:470 OHM,5%,0.25W	01121	CB4715
A25R558	315-0181-00			RES.,FXD,CMPSN:180 OHM,5%,0.25W	01121	CB1815
A25R559	315-0271-00			RES.,FXD,CMPSN:270 OHM,5%,0.25W	01121	CB2715
A25R562	315-0201-00			RES.,FXD,CMPSN:200 OHM,5%,0.25W	01121	CB2015
A25R563	315-0301-00			RES.,FXD,CMPSN:300 OHM,5%,0.25W	01121	CB3015
A25R573	307-0541-00			RES,NTWK,THK FI:(7)1K OHM,10%,1W	91637	MSP08A01-102G
A25R574	315-0102-00			RES.,FXD,CMPSN:1K OHM,5%,0.25W	01121	CB1025
A25R575	315-0102-00			RES.,FXD,CMPSN:1K OHM,5%,0.25W	01121	CB1025
A25R599	315-0471-00			RES.,FXD,CMPSN:470 OHM,5%,0.25W	01121	CB4715
A25R602	307-0541-00			RES,NTWK,THK FI:(7)1K OHM,10%,1W	91637	MSP08A01-102G
A25R603	307-0541-00			RES,NTWK,THK FI:(7)1K OHM,10%,1W	91637	MSP08A01-102G
A25R608	315-0152-00			RES.,FXD,CMPSN:1.5K OHM,5%,0.25W	01121	CB1525
A25R609	315-0121-00			RES.,FXD,CMPSN:120 OHM,5%,0.25W	01121	CB1215
A25R618	315-0152-00			RES.,FXD,CMPSN:1.5K OHM,5%,0.25W	01121	CB1525
A25R619	315-0121-00			RES.,FXD,CMPSN:120 OHM,5%,0.25W	01121	CB1215
A25R620	321-0247-00			RES.,FXD,FILM:3.65K OHM,1%,0.125W	91637	MFF1816G36500F
A25R622	315-0433-00			RES.,FXD,CMPSN:43K OHM,5%,0.25W	01121	CB4335

http://manoman.sqhill.com

Component No.	Tektronix Part No.	Serial/Model No. Eff	Dscont	Name & Description	Mfr Code	Mfr Part Number
A25R623	311-1230-00			RES.,VAR,NONWIR:20K OHM,20%,0.50W	32997	3386F-T04-203
A25T233	120-1279-00			TRANSFORMER,RF:TOROID,2 WINDINGS	80009	120-1279-00
A25T237	120-1280-00			TRANSFORMER,RF:TOROID,2 WINDINGS	80009	120-1280-00
A25T333	120-1279-00			TRANSFORMER,RF:TOROID,2 WINDINGS	80009	120-1279-00
A25T337	120-1280-00			TRANSFORMER,RF:TOROID,2 WINDINGS	80009	120-1280-00
A25T345	120-0444-00			XFMR,TOROID:5 TURNS,BIFILAR	80009	120-0444-00
A25T509	120-0444-00			XFMR,TOROID:5 TURNS,BIFILAR	80009	120-0444-00
A25U21	156-1149-00			MICROCIRCUIT,LI:OPERATIONAL AMP,JFET INPUT	27014	LF351N
A25U65	155-0187-00			MICROCIRCUIT,LI:FT DOUBLER	80009	155-0187-00
A25U73	156-0158-00			MICROCIRCUIT,LI:DUAL OPERATIONAL AMPLIFIER	18324	MC1458V
A25U503	156-0690-03			MICROCIRCUIT,DI:QUAD 2 INP NOR GATE,BURN IN	01295	SN74S02
A25U510	156-0362-00			MICROCIRCUIT,LI:ECL COMPARATOR	34335	AM685HL
A25U519	156-0480-02			MICROCIRCUIT,DI:QUAD 2 INP & GATE	01295	SN74LS08NP3
A25U520	156-0497-00			MICROCIRCUIT,DI:10-BIT SHIFT REGISTER	18324	N8273B
A25U521	156-0982-03			MICROCIRCUIT,DI:OCTAL-D-EDGE FF,SCRN	07263	74LS374
A25U522	156-0982-03			MICROCIRCUIT,DI:OCTAL-D-EDGE FF,SCRN	07263	74LS374
A25U533	156-0067-12			MICROCIRCUIT,LI:OPERATIONAL AMPLIFIER	04713	MC1741CU
A25U554	156-0385-02			MICROCIRCUIT,DI:HEX INVERTER	01295	SN74LS04
A25U569	156-0388-03			MICROCIRCUIT,DI:DUAL D FLIP-FLOP	07263	74LS74A
A25U570	156-0497-00			MICROCIRCUIT,DI:10-BIT SHIFT REGISTER	18324	N8273B
A25U575	156-0230-00			MICROCIRCUIT,DI:DUAL D MA-SLAVE FLIP-FLOP	80009	156-0230-00
A25U580	156-0230-00			MICROCIRCUIT,DI:DUAL D MA-SLAVE FLIP-FLOP	80009	156-0230-00
A25U585	156-0230-00			MICROCIRCUIT,DI:DUAL D MA-SLAVE FLIP-FLOP	80009	156-0230-00
A25U590	156-0230-00			MICROCIRCUIT,DI:DUAL D MA-SLAVE FLIP-FLOP	80009	156-0230-00
A25U595	156-0230-00			MICROCIRCUIT,DI:DUAL D MA-SLAVE FLIP-FLOP	80009	156-0230-00
A25U610	155-0167-01			MICROCIRCUIT,LI:4BIT D/A CONVERTER	80009	155-0167-01
A25U620	155-0167-01			MICROCIRCUIT,LI:4BIT D/A CONVERTER	80009	155-0167-01
A25U621	156-0158-00			MICROCIRCUIT,LI:DUAL OPERATIONAL AMPLIFIER	18324	MC1458V
A25U630	156-0388-03			MICROCIRCUIT,DI:DUAL D FLIP-FLOP	07263	74LS74A
A25VR85	152-0217-00			SEMICOND DEVICE:ZENER,0.4W,8.2V,5%	04713	SZG20
A25VR284	152-0227-00			SEMICOND DEVICE:ZENER,0.4W,6.2V,5%	04713	SZ13903

http://manoman.sqhill.com

Component No.	Tektronix Part No.	Serial/Model No. Eff	Dscont	Name & Description	Mfr Code	Mfr Part Number
A26	----- -----			CKT BOARD ASSY:CONTROL LOGIC		
A26C110	281-0786-00			CAP.,FXD,CER DI:150PF,10%,100V	72982	8035D2AADX5P151K
A26C120	281-0775-00			CAP.,FXD,CER DI:0.1UF,20%,50V	72982	8005D9AABZ5U104M
A26C130	281-0775-00			CAP.,FXD,CER DI:0.1UF,20%,50V	72982	8005D9AABZ5U104M
A26C230	281-0775-00			CAP.,FXD,CER DI:0.1UF,20%,50V	72982	8005D9AABZ5U104M
A26C320	281-0775-00			CAP.,FXD,CER DI:0.1UF,20%,50V	72982	8005D9AABZ5U104M
A26C330	281-0775-00			CAP.,FXD,CER DI:0.1UF,20%,50V	72982	8005D9AABZ5U104M
A26C410	281-0775-00			CAP.,FXD,CER DI:0.1UF,20%,50V	72982	8005D9AABZ5U104M
A26C430	281-0775-00			CAP.,FXD,CER DI:0.1UF,20%,50V	72982	8005D9AABZ5U104M
A26C610	281-0775-00			CAP.,FXD,CER DI:0.1UF,20%,50V	72982	8005D9AABZ5U104M
A26C611	281-0775-00			CAP.,FXD,CER DI:0.1UF,20%,50V	72982	8005D9AABZ5U104M
A26C620	281-0775-00			CAP.,FXD,CER DI:0.1UF,20%,50V	72982	8005D9AABZ5U104M
A26C720	281-0775-00			CAP.,FXD,CER DI:0.1UF,20%,50V	72982	8005D9AABZ5U104M
A26C820	281-0775-00			CAP.,FXD,CER DI:0.1UF,20%,50V	72982	8005D9AABZ5U104M
A26C920	281-0775-00			CAP.,FXD,CER DI:0.1UF,20%,50V	72982	8005D9AABZ5U104M
A26C1010	281-0775-00			CAP.,FXD,CER DI:0.1UF,20%,50V	72982	8005D9AABZ5U104M
A26C1020	281-0775-00			CAP.,FXD,CER DI:0.1UF,20%,50V	72982	8005D9AABZ5U104M
A26C1030	281-0775-00			CAP.,FXD,CER DI:0.1UF,20%,50V	72982	8005D9AABZ5U104M
A26C1120	281-0775-00			CAP.,FXD,CER DI:0.1UF,20%,50V	72982	8005D9AABZ5U104M
A26C1210	281-0775-00			CAP.,FXD,CER DI:0.1UF,20%,50V	72982	8005D9AABZ5U104M
A26C1211	281-0775-00			CAP.,FXD,CER DI:0.1UF,20%,50V	72982	8005D9AABZ5U104M
A26C1220	281-0775-00			CAP.,FXD,CER DI:0.1UF,20%,50V	72982	8005D9AABZ5U104M
A26C1310	281-0775-00			CAP.,FXD,CER DI:0.1UF,20%,50V	72982	8005D9AABZ5U104M
A26C1311	281-0775-00			CAP.,FXD,CER DI:0.1UF,20%,50V	72982	8005D9AABZ5U104M
A26C1330	281-0809-00			CAP.,FXD,CER DI:200PF,5%,100V	72982	8013T2ADDC1G201J
A26C1410	281-0775-00			CAP.,FXD,CER DI:0.1UF,20%,50V	72982	8005D9AABZ5U104M
A26C1411	281-0775-00			CAP.,FXD,CER DI:0.1UF,20%,50V	72982	8005D9AABZ5U104M
A26C1421	281-0775-00			CAP.,FXD,CER DI:0.1UF,20%,50V	72982	8005D9AABZ5U104M
A26C1520	281-0775-00			CAP.,FXD,CER DI:0.1UF,20%,50V	72982	8005D9AABZ5U104M
A26C1600	281-0775-00			CAP.,FXD,CER DI:0.1UF,20%,50V	72982	8005D9AABZ5U104M
A26C1610	281-0788-00			CAP.,FXD,CER DI:470PF,10%,100V	72982	8005H9AADW5R471K
A26C1620	281-0775-00			CAP.,FXD,CER DI:0.1UF,20%,50V	72982	8005D9AABZ5U104M
A26C1631	281-0809-00			CAP.,FXD,CER DI:200PF,5%,100V	72982	8013T2ADDC1G201J
A26C1700	281-0775-00			CAP.,FXD,CER DI:0.1UF,20%,50V	72982	8005D9AABZ5U104M
A26C1720	281-0775-00			CAP.,FXD,CER DI:0.1UF,20%,50V	72982	8005D9AABZ5U104M
A26C1800	281-0772-00			CAP.,FXD,CER DI:0.0047UF,10%,100V	04222	GC701C472K
A26C1810	281-0775-00			CAP.,FXD,CER DI:0.1UF,20%,50V	72982	8005D9AABZ5U104M
A26C1830	281-0775-00			CAP.,FXD,CER DI:0.1UF,20%,50V	72982	8005D9AABZ5U104M
A26C1920	281-0775-00			CAP.,FXD,CER DI:0.1UF,20%,50V	72982	8005D9AABZ5U104M
A26C2010	281-0775-00			CAP.,FXD,CER DI:0.1UF,20%,50V	72982	8005D9AABZ5U104M
A26C2012	281-0775-00			CAP.,FXD,CER DI:0.1UF,20%,50V	72982	8005D9AABZ5U104M
A26C2110	281-0775-00			CAP.,FXD,CER DI:0.1UF,20%,50V	72982	8005D9AABZ5U104M
A26C2120	283-0638-00			CAP.,FXD,MICA D:130PF,1%,100V	00853	D151F131F0
A26C2127	281-0812-00			CAP.,FXD,CER DI:1000PF,10%,100V	72982	8035D9AADX7R102K
A26C2130	281-0775-00			CAP.,FXD,CER DI:0.1UF,20%,50V	72982	8005D9AABZ5U104M
A26C2201	283-0698-00			CAP.,FXD,MICA D:390PF,1%,500V	09023	CD15ED391F03
A26C2220	283-0668-00			CAP.,FXD,MICA D:184PF,1%,500V	00853	D155F1840F0
A26C2223	281-0775-00			CAP.,FXD,CER DI:0.1UF,20%,50V	72982	8005D9AABZ5U104M
A26C2225	281-0775-00			CAP.,FXD,CER DI:0.1UF,20%,50V	72982	8005D9AABZ5U104M
A26CR1800	152-0322-00			SEMICOND DEVICE:SILICON,15V,HOT CARRIER	50434	5082-2672
A26L2224	108-0245-00			COIL,RF:3.9UH	76493	B6310-1
A26Q2010	151-0188-03			TRANSISTOR:SILICON,PNP,SEL	80009	151-0188-03
A26Q2020	151-0333-00			TRANSISTOR:SILICON,NPN,SEL FROM MPS918	04713	SPS1752
A26Q2021	151-0333-00			TRANSISTOR:SILICON,NPN,SEL FROM MPS918	04713	SPS1752
A26R111	315-0101-00			RES.,FXD,CMPSN:100 OHM,5%,0.25W	01121	CB1015
A26R130	307-1096-00			RES NTWK,FXD,FI:7,2 OHM,2%,1W	91637	MSP08A01202G

http://manoman.sqhill.com

Component No.	Tektronix Part No.	Serial/Model No. Eff	Dscont	Name & Description	Mfr Code	Mfr Part Number
A26R1110	315-0472-00			RES.,FXD,CMPSN:4.7K OHM,5%,0.25W	01121	CB4725
A26R1320	315-0471-00			RES.,FXD,CMPSN:470 OHM,5%,0.25W	01121	CB4715
A26R1630	315-0471-00			RES.,FXD,CMPSN:470 OHM,5%,0.25W	01121	CB4715
A26R1700	315-0223-00			RES.,FXD,CMPSN:22K OHM,5%,0.25W	01121	CB2235
A26R1803	315-0470-00			RES.,FXD,CMPSN:47 OHM,5%,0.25W	01121	CB4705
A26R1805	315-0472-00			RES.,FXD,CMPSN:4.7K OHM,5%,0.25W	01121	CB4725
A26R2000	315-0201-00			RES.,FXD,CMPSN:200 OHM,5%,0.25W	01121	CB2015
A26R2020	315-0511-00			RES.,FXD,CMPSN:510 OHM,5%,0.25W	01121	CB5115
A26R2111	315-0512-00			RES.,FXD,CMPSN:5.1K OHM,5%,0.25W	01121	CB5125
A26R2112	315-0391-00			RES.,FXD,CMPSN:390 OHM,5%,0.25W	01121	CB3915
A26R2113	315-0132-00			RES.,FXD,CMPSN:1.3K OHM,5%,0.25W	01121	CB1325
A26R2121	315-0112-00			RES.,FXD,CMPSN:1.1K OHM,5%,0.25W	01121	CB1125
A26R2122	315-0132-00			RES.,FXD,CMPSN:1.3K OHM,5%,0.25W	01121	CB1325
A26R2123	315-0271-00			RES.,FXD,CMPSN:270 OHM,5%,0.25W	01121	CB2715
A26R2124	315-0391-00			RES.,FXD,CMPSN:390 OHM,5%,0.25W	01121	CB3915
A26R2125	315-0512-00			RES.,FXD,CMPSN:5.1K OHM,5%,0.25W	01121	CB5125
A26R2126	315-0512-00			RES.,FXD,CMPSN:5.1K OHM,5%,0.25W	01121	CB5125
A26R2200	315-0153-00			RES.,FXD,CMPSN:15K OHM,5%,0.25W	01121	CB1535
A26R2201	315-0103-00			RES.,FXD,CMPSN:10K OHM,5%,0.25W	01121	CB1035
A26R2224	315-0100-00	XB010151		RES.,FXD,CMPSN:10 OHM,5%,0.25W	01121	CB1005
A26R2230	315-0122-00			RES.,FXD,CMPSN:1.2K OHM,5%,0.25W	01121	CB1225
A26U100	156-0481-02			MICROCIRCUIT,DI:TRIPLE 3 INP & GATE	27014	DM74LS11NA+
A26U110	156-0304-02			MICROCIRCUIT,DI:DUAL 4 INP NAND GATE	01295	SN74S20
A26U120	156-0219-00			MICROCIRCUIT,DI:8-INPUT PRIORITY DCDR	07263	9318DC
A26U130	156-0738-04			MICROCIRCUIT,DI:HEX D FF W/CLEAR,BURN-IN	01295	SN74S174(JP4)
A26U200	156-0479-02			MICROCIRCUIT,DI:QUAD 2-INP ORGATE	01295	SN74LS32NP3
A26U210	156-0388-03			MICROCIRCUIT,DI:DUAL D FLIP-FLOP	07263	74LS74A
A26U220	156-0469-02			MICROCIRCUIT,DI:3/8 LINE DCDR	01295	SN74LS138NP3
A26U230	156-0735-02			MICROCIRCUIT,DI:4 BIT BISTABLE LCH,BURN-IN	80009	156-0735-02
A26U300	156-0385-02			MICROCIRCUIT,DI:HEX INVERTER	01295	SN74LS04
A26U310	156-0720-02			MICROCIRCUIT,DI:HEX DRVR,4 TO2 LINE	01295	SN74LS368
A26U320	156-0388-03			MICROCIRCUIT,DI:DUAL D FLIP-FLOP	07263	74LS74A
A26U400	156-0383-02			MICROCIRCUIT,DI:QUAD 2-INP NOR GATE	01295	SN74LS02
A26U600	156-0412-02			MICROCIRCUIT,DI:SYN 4 BIT UP-DOWN CNTR	80009	156-0412-02
A26U620	156-0916-02			MICROCIRCUIT,DI:8-2 INP 3-STATE BFR,BURN	27014	DM81LS97
A26U630	156-0865-02			MICROCIRCUIT,DI:OCTAL D-TYPE FF W/CLEAR	01295	SN74LS273NP3
A26U700	156-0470-02			MICROCIRCUIT,DI:8 INP DATA SEL W/3 STATE	01295	SN74LS251
A26U720	156-0865-02			MICROCIRCUIT,DI:OCTAL D-TYPE FF W/CLEAR	01295	SN74LS273NP3
A26U730	156-0916-02			MICROCIRCUIT,DI:8-2 INP 3-STATE BFR,BURN	27014	DM81LS97
A26U800	156-0865-02			MICROCIRCUIT,DI:OCTAL D-TYPE FF W/CLEAR	01295	SN74LS273NP3
A26U820	156-0916-02			MICROCIRCUIT,DI:8-2 INP 3-STATE BFR,BURN	27014	DM81LS97
A26U830	156-0975-02			MICROCIRCUIT,DI:UNIV SHIFT/STORAGE RGTR	01295	SN74LS299N3/J4
A26U900	156-0412-02			MICROCIRCUIT,DI:SYN 4 BIT UP-DOWN CNTR	80009	156-0412-02
A26U920	156-0529-02			MICROCIRCUIT,DI:DATA SELECTOR	80009	156-0529-02
A26U930	156-0975-02			MICROCIRCUIT,DI:UNIV SHIFT/STORAGE RGTR	01295	SN74LS299N3/J4
A26U1000	156-0412-02			MICROCIRCUIT,DI:SYN 4 BIT UP-DOWN CNTR	80009	156-0412-02
A26U1020	156-0529-02			MICROCIRCUIT,DI:DATA SELECTOR	80009	156-0529-02
A26U1030	156-0470-02			MICROCIRCUIT,DI:8 INP DATA SEL W/3 STATE	01295	SN74LS251
A26U1100	156-0412-02			MICROCIRCUIT,DI:SYN 4 BIT UP-DOWN CNTR	80009	156-0412-02
A26U1120	156-0471-02			MICROCIRCUIT,DI:DUAL 4/1 DATA SEL	80009	156-0471-02
A26U1130	156-0470-02			MICROCIRCUIT,DI:8 INP DATA SEL W/3 STATE	01295	SN74LS251
A26U1200	156-0412-02			MICROCIRCUIT,DI:SYN 4 BIT UP-DOWN CNTR	80009	156-0412-02
A26U1220	156-0412-02			MICROCIRCUIT,DI:SYN 4 BIT UP-DOWN CNTR	80009	156-0412-02
A26U1230	156-0953-02			MICROCIRCUIT,DI:4 BIT MAGNITUDE CMPRTR	01295	SN74LS85
A26U1300	156-0412-02			MICROCIRCUIT,DI:SYN 4 BIT UP-DOWN CNTR	80009	156-0412-02
A26U1320	156-0798-02			MICROCIRCUIT,DI:DUAL 14 TO 1 LINE SEL/MUX	01295	SN74LS153

http://manoman.sqhill.com

Component No.	Tektronix Part No.	Serial/Model No. Eff	Dscont	Name & Description	Mfr Code	Mfr Part Number
A26U1330	156-0645-02			MICROCIRCUIT,DI:SCHMITT-TRIG POS-NAND	01295	SN74LS14
A26U1400	156-0480-02			MICROCIRCUIT,DI:QUAD 2 INP & GATE	01295	SN74LS08NP3
A26U1420	156-0388-03			MICROCIRCUIT,DI:DUAL D FLIP-FLOP	07263	74LS74A
A26U1430	156-0720-02			MICROCIRCUIT,DI:HEX DRVR,4 TO2 LINE	01295	SN74LS368
A26U1510	156-0388-03			MICROCIRCUIT,DI:DUAL D FLIP-FLOP	07263	74LS74A
A26U1520	156-0388-03			MICROCIRCUIT,DI:DUAL D FLIP-FLOP	07263	74LS74A
A26U1530	156-0382-02			MICROCIRCUIT,DI:QUAD 2-INP NAND GATE	01295	SN74LS00
A26U1610	156-0388-03			MICROCIRCUIT,DI:DUAL D FLIP-FLOP	07263	74LS74A
A26U1620	156-0479-02			MICROCIRCUIT,DI:QUAD 2-INP ORGATE	01295	SN74LS32NP3
A26U1630	156-0381-02			MICROCIRCUIT,DI:QUAD 2-INP EXCL OR GATE	01295	SN74LS86
A26U1710	156-0481-02			MICROCIRCUIT,DI:TRIPLE 3 INP & GATE	27014	DM74LS11NA+
A26U1720	156-0471-02			MICROCIRCUIT,DI:DUAL 4/1 DATA SEL	80009	156-0471-02
A26U1730	156-0388-03			MICROCIRCUIT,DI:DUAL D FLIP-FLOP	07263	74LS74A
A26U1820	156-0865-02			MICROCIRCUIT,DI:OCTAL D-TYPE FF W/CLEAR	01295	SN74LS273NP3
A26U1830	156-0388-03			MICROCIRCUIT,DI:DUAL D FLIP-FLOP	07263	74LS74A
A26U1900	156-0413-02			MICROCIRCUIT,DI:QUAD 2-INP SCHMIT TRIG	80009	156-0413-02
A26U1910	156-0798-02			MICROCIRCUIT,DI:DUAL 14 TO 1 LINE SEL/MUX	01295	SN74LS153
A26U1920	156-0388-03			MICROCIRCUIT,DI:DUAL D FLIP-FLOP	07263	74LS74A
A26U1930	156-0798-02			MICROCIRCUIT,DI:DUAL 14 TO 1 LINE SEL/MUX	01295	SN74LS153
A26U2000	156-0412-02			MICROCIRCUIT,DI:SYN 4 BIT UP-DOWN CNTR	80009	156-0412-02
A26U2030	156-0388-03			MICROCIRCUIT,DI:DUAL D FLIP-FLOP	07263	74LS74A
A26U2100	156-0798-02			MICROCIRCUIT,DI:DUAL 14 TO 1 LINE SEL/MUX	01295	SN74LS153
A26U2130	156-0412-02			MICROCIRCUIT,DI:SYN 4 BIT UP-DOWN CNTR	80009	156-0412-02
A26U2210	156-0172-02			MICROCIRCUIT,DI:DUAL RETRIG MONOSTABLE MV	01295	SN74123
A26U2220	156-0383-02			MICROCIRCUIT,DI:QUAD 2-INP NOR GATE	01295	SN74LS02
A26U2230	156-0385-02			MICROCIRCUIT,DI:HEX INVERTER	01295	SN74LS04
A26W1920	131-0566-00			BUS CONDUCTOR:DUMMY RES,2.375,22 AWG	55210	L-2007-1
A26W1931	131-0566-00			BUS CONDUCTOR:DUMMY RES,2.375,22 AWG	55210	L-2007-1

http://manoman.sqhill.com

Component No.	Tektronix Part No.	Serial/Model No. Eff	Dscont	Name & Description	Mfr Code	Mfr Part Number
A27	----- -----			CKT BOARD ASSY:M.P.U.		
A27C101	283-0203-00			CAP.,FXD,CER DI:0.47UF,20%,50V	72982	8131N075E474M
A27C102	281-0775-00			CAP.,FXD,CER DI:0.1UF,20%,50V	72982	8005D9AABZ5U104M
A27C103	283-0212-00			CAP.,FXD,CER DI:2UF,20%,50V	72982	8141N064Z5U205M
A27C105	281-0620-00	XB010300		CAP.,FXD,CER DI:21PF,1%,500V	72982	301-000C0G0210F
A27C120	281-0814-00			CAP.,FXD,CER DI:100PF,10%,100V	04222	GC70-1-A101K
A27C200	290-0782-00			CAP.,FXD,ELCTLT:4.7UF,+75-10%,35V	55680	35ULA4R7V-T
A27C202	281-0775-00			CAP.,FXD,CER DI:0.1UF,20%,50V	72982	8005D9AABZ5U104M
A27C210	281-0775-00			CAP.,FXD,CER DI:0.1UF,20%,50V	72982	8005D9AABZ5U104M
A27C320	281-0775-00			CAP.,FXD,CER DI:0.1UF,20%,50V	72982	8005D9AABZ5U104M
A27C321	290-0782-00			CAP.,FXD,ELCTLT:4.7UF,+75-10%,35V	55680	35ULA4R7V-T
A27C410	281-0775-00			CAP.,FXD,CER DI:0.1UF,20%,50V	72982	8005D9AABZ5U104M
A27C510	281-0775-00			CAP.,FXD,CER DI:0.1UF,20%,50V	72982	8005D9AABZ5U104M
A27C600	281-0775-00			CAP.,FXD,CER DI:0.1UF,20%,50V	72982	8005D9AABZ5U104M
A27C610	281-0775-00			CAP.,FXD,CER DI:0.1UF,20%,50V	72982	8005D9AABZ5U104M
A27C620	281-0775-00			CAP.,FXD,CER DI:0.1UF,20%,50V	72982	8005D9AABZ5U104M
A27C800	281-0775-00			CAP.,FXD,CER DI:0.1UF,20%,50V	72982	8005D9AABZ5U104M
A27C801	281-0775-00			CAP.,FXD,CER DI:0.1UF,20%,50V	72982	8005D9AABZ5U104M
A27C810	281-0775-00			CAP.,FXD,CER DI:0.1UF,20%,50V	72982	8005D9AABZ5U104M
A27C825	283-0615-00			CAP.,FXD,MICA D:33PF,5%,500V	00853	D155E330J0
A27C826	281-0775-00			CAP.,FXD,CER DI:0.1UF,20%,50V	72982	8005D9AABZ5U104M
A27C827	281-0775-00			CAP.,FXD,CER DI:0.1UF,20%,50V	72982	8005D9AABZ5U104M
A27C900	281-0775-00			CAP.,FXD,CER DI:0.1UF,20%,50V	72982	8005D9AABZ5U104M
A27C910	281-0775-00			CAP.,FXD,CER DI:0.1UF,20%,50V	72982	8005D9AABZ5U104M
A27C920	281-0775-00			CAP.,FXD,CER DI:0.1UF,20%,50V	72982	8005D9AABZ5U104M
A27C921	290-0782-00			CAP.,FXD,ELCTLT:4.7UF,+75-10%,35V	55680	35ULA4R7V-T
A27C922	290-0782-00			CAP.,FXD,ELCTLT:4.7UF,+75-10%,35V	55680	35ULA4R7V-T
A27C923	290-0782-00			CAP.,FXD,ELCTLT:4.7UF,+75-10%,35V	55680	35ULA4R7V-T
A27C1200	281-0775-00			CAP.,FXD,CER DI:0.1UF,20%,50V	72982	8005D9AABZ5U104M
A27C1210	281-0775-00			CAP.,FXD,CER DI:0.1UF,20%,50V	72982	8005D9AABZ5U104M
A27C1310	281-0775-00			CAP.,FXD,CER DI:0.1UF,20%,50V	72982	8005D9AABZ5U104M
A27C1320	281-0775-00			CAP.,FXD,CER DI:0.1UF,20%,50V	72982	8005D9AABZ5U104M
A27L825	108-0436-00			COIL,RF:FIXED,240NH	80009	108-0436-00
A27Q100	151-0188-03			TRANSISTOR:SILICON,PNP,SEL	80009	151-0188-03
A27R101	315-0101-00			RES.,FXD,CMPSN:100 OHM,5%,0.25W	01121	CB1015
A27R102	315-0202-00			RES.,FXD,CMPSN:2K OHM,5%,0.25W	01121	CB2025
A27R103	315-0752-00			RES.,FXD,CMPSN:7.5K OHM,5%,0.25W	01121	CB7525
A27R104	315-0103-00			RES.,FXD,CMPSN:10K OHM,5%,0.25W	01121	CB1035
A27R105	315-0512-00			RES.,FXD,CMPSN:5.1K OHM,5%,0.25W	01121	CB5125
A27R106	315-0243-00			RES.,FXD,CMPSN:24K OHM,5%,0.25W	01121	CB2435
A27R108	315-0102-00			RES.,FXD,CMPSN:1K OHM,5%,0.25W	01121	CB1025
A27R109	315-0103-00			RES.,FXD,CMPSN:10K OHM,5%,0.25W	01121	CB1035
A27R301	315-0511-00			RES.,FXD,CMPSN:510 OHM,5%,0.25W	01121	CB5115
A27R302	315-0511-00			RES.,FXD,CMPSN:510 OHM,5%,0.25W	01121	CB5115
A27R303	315-0511-00			RES.,FXD,CMPSN:510 OHM,5%,0.25W	01121	CB5115
A27R304	315-0511-00			RES.,FXD,CMPSN:510 OHM,5%,0.25W	01121	CB5115
A27R305	315-0511-00			RES.,FXD,CMPSN:510 OHM,5%,0.25W	01121	CB5115
A27R306	315-0511-00			RES.,FXD,CMPSN:510 OHM,5%,0.25W	01121	CB5115
A27R310	307-0445-00			RES NTWK,FXD,FI:4.7K OHM,20%,(9) RES	91637	MSP10A01-472M
A27R401	315-0511-00			RES.,FXD,CMPSN:510 OHM,5%,0.25W	01121	CB5115
A27R420	307-0445-00			RES NTWK,FXD,FI:4.7K OHM,20%,(9) RES	91637	MSP10A01-472M
A27R821	315-0100-00			RES.,FXD,CMPSN:10 OHM,5%,0.25W	01121	CB1005
A27R822	315-0100-00			RES.,FXD,CMPSN:10 OHM,5%,0.25W	01121	CB1005
A27R823	315-0100-00			RES.,FXD,CMPSN:10 OHM,5%,0.25W	01121	CB1005
A27R824	315-0100-00			RES.,FXD,CMPSN:10 OHM,5%,0.25W	01121	CB1005
A27R825	315-0102-00			RES.,FXD,CMPSN:1K OHM,5%,0.25W	01121	CB1025

http://manoman.sqhill.com

Component No.	Tektronix Part No.	Serial/Model No. Eff	Dscont	Name & Description	Mfr Code	Mfr Part Number
A27R1000	307-0445-00			RES NTWK,FXD,FI:4.7K OHM,20%,(9) RES	91637	MSP10A01-472M
A27R1200	307-0445-00			RES NTWK,FXD,FI:4.7K OHM,20%,(9) RES	91637	MSP10A01-472M
A27U110	156-0388-03			MICROCIRCUIT,DI:DUAL D FLIP-FLOP	07263	74LS74A
A27U120	156-1172-01			MICROCIRCUIT,DI:DUAL 4 BIT CNTR,BURN IN	01295	SN74LS393
A27U200	156-0405-00			MICROCIRCUIT,DI:DUAL RETRIG MONOSTABLE MV	07263	9602 (PC OR DC)
A27U210	156-0874-02			MICROCIRCUIT,DI:8 BIT ADDRESSABLE LCH	80009	156-0874-02
A27U220	156-0386-02			MICROCIRCUIT,DI:TRIPLE 3 INP NAND GATE	01295	SN74LS10NP3
A27U310	156-0916-02			MICROCIRCUIT,DI:8-2 INP 3-STATE BFR,BURN	27014	DM81LS97
A27U320	156-0388-03			MICROCIRCUIT,DI:DUAL D FLIP-FLOP	07263	74LS74A
A27U400	156-0479-02			MICROCIRCUIT,DI:QUAD 2-INP ORGATE	01295	SN74LS32NP3
A27U410	156-0916-02			MICROCIRCUIT,DI:8-2 INP 3-STATE BFR,BURN	27014	DM81LS97
A27U420	156-1172-01			MICROCIRCUIT,DI:DUAL 4 BIT CNTR,BURN IN	01295	SN74LS393
A27U500	156-0916-02			MICROCIRCUIT,DI:8-2 INP 3-STATE BFR,BURN	27014	DM81LS97
A27U510	156-0916-02			MICROCIRCUIT,DI:8-2 INP 3-STATE BFR,BURN	27014	DM81LS97
A27U520	156-0645-02			MICROCIRCUIT,DI:SCHMITT-TRIG POS-NAND	01295	SN74LS14
A27U600	156-0916-02			MICROCIRCUIT,DI:8-2 INP 3-STATE BFR,BURN	27014	DM81LS97
A27U610	156-0916-02			MICROCIRCUIT,DI:8-2 INP 3-STATE BFR,BURN	27014	DM81LS97
A27U620	156-0916-02			MICROCIRCUIT,DI:8-2 INP 3-STATE BFR,BURN	27014	DM81LS97
A27U700	156-0935-00			MICROCIRCUIT,DI:MICROPROCESSOR,16 BIT	80009	156-0935-00
A27U800	156-0916-02			MICROCIRCUIT,DI:8-2 INP 3-STATE BFR,BURN	27014	DM81LS97
A27U810	156-0916-02			MICROCIRCUIT,DI:8-2 INP 3-STATE BFR,BURN	27014	DM81LS97
A27U900	156-0865-02			MICROCIRCUIT,DI:OCTAL D-TYPE FF W/CLEAR	01295	SN74LS273NP3
A27U910	156-0736-02			MICROCIRCUIT,DI:BCD TO DECIMAL DCDR	80009	156-0736-02
A27U920	156-0993-00			MICROCIRCUIT,INTFC:FOUR PH CLOCK GEN/DRIVER	80009	156-0993-00
A27U1000	156-0480-02			MICROCIRCUIT,DI:QUAD 2 INP & GATE	01295	SN74LS08NP3
A27U1010	156-0736-02			MICROCIRCUIT,DI:BCD TO DECIAML DCDR	80009	156-0736-02
A27U1100	156-0480-02			MICROCIRCUIT,DI:QUAD 2 INP & GATE	01295	SN74LS08NP3
A27U1110	156-0479-02			MICROCIRCUIT,DI:QUAD 2-INP ORGATE	01295	SN74LS32NP3
A27U1120	156-0720-02			MICROCIRCUIT,DI:HEX DRVR,4 TO2 LINE	01295	SN74LS368
A27U1200	156-1176-01			MICROCIRCUIT,DI:8/3 LINE PRIORITY ENCODER	80009	156-1176-01
A27U1210	156-0541-02			MICROCIRCUIT,DI:DUAL 2 TO 4 LINE DCDR	01295	SN74LS139NP3
A27U1220	156-0479-02			MICROCIRCUIT,DI:QUAD 2-INP ORGATE	01295	SN74LS32NP3
A27U1310	156-0874-02			MICROCIRCUIT,DI:8 BIT ADDRESSABLE LCH	80009	156-0874-02
A27U1320	156-1026-02			MICROCIRCUIT,DI:4/1 LINE DECODER,BURN-IN	80009	156-1026-02
A27U1400	156-0469-02			MICROCIRCUIT,DI:3/8 LINE DCDR	01295	SN74LS138NP3
A27U1410	156-0479-02			MICROCIRCUIT,DI:QUAD 2-INP ORGATE	01295	SN74LS32NP3
A27Y1020	158-0152-00			XTAL UNIT,QTZ:48.0 MHZ,0.015%	88407	80AX-1232

http://manoman.sqhill.com

Component No.	Tektronix Part No.	Serial/Model No. Eff	Dscont	Name & Description	Mfr Code	Mfr Part Number
A28	----- -----			CKT BOARD ASSY:RAM		
A28C120	283-0178-00			CAP.,FXD,CER DI:0.1UF,+80-20%,100V	72982	8131N145651 104Z
A28C140	283-0178-00			CAP.,FXD,CER DI:0.1UF,+80-20%,100V	72982	8131N145651 104Z
A28C150	290-0580-00			CAP.,FXD,ELCTLT:0.27UF,20%,50V	56289	196D274X0050HA1
A28C251	283-0178-00			CAP.,FXD,CER DI:0.1UF,+80-20%,100V	72982	8131N145651 104Z
A28C260	283-0178-00			CAP.,FXD,CER DI:0.1UF,+80-20%,100V	72982	8131N145651 104Z
A28C310	283-0178-00			CAP.,FXD,CER DI:0.1UF,+80-20%,100V	72982	8131N145651 104Z
A28C330	283-0178-00			CAP.,FXD,CER DI:0.1UF,+80-20%,100V	72982	8131N145651 104Z
A28C420	283-0178-00			CAP.,FXD,CER DI:0.1UF,+80-20%,100V	72982	8131N145651 104Z
A28C440	283-0178-00			CAP.,FXD,CER DI:0.1UF,+80-20%,100V	72982	8131N145651 104Z
A28C460	283-0178-00			CAP.,FXD,CER DI:0.1UF,+80-20%,100V	72982	8131N145651 104Z
A28C510	283-0178-00			CAP.,FXD,CER DI:0.1UF,+80-20%,100V	72982	8131N145651 104Z
A28C530	283-0178-00			CAP.,FXD,CER DI:0.1UF,+80-20%,100V	72982	8131N145651 104Z
A28C550	283-0178-00			CAP.,FXD,CER DI:0.1UF,+80-20%,100V	72982	8131N145651 104Z
A28C620	283-0178-00			CAP.,FXD,CER DI:0.1UF,+80-20%,100V	72982	8131N145651 104Z
A28C640	283-0178-00			CAP.,FXD,CER DI:0.1UF,+80-20%,100V	72982	8131N145651 104Z
A28C660	283-0178-00			CAP.,FXD,CER DI:0.1UF,+80-20%,100V	72982	8131N145651 104Z
A28C710	283-0178-00			CAP.,FXD,CER DI:0.1UF,+80-20%,100V	72982	8131N145651 104Z
A28C730	283-0178-00			CAP.,FXD,CER DI:0.1UF,+80-20%,100V	72982	8131N145651 104Z
A28C800	290-0755-00			CAP.,FXD,ELCTLT:100UF,+50-10%,10V	56289	502D223
A28C820	283-0178-00			CAP.,FXD,CER DI:0.1UF,+80-20%,100V	72982	8131N145651 104Z
A28C840	283-0178-00			CAP.,FXD,CER DI:0.1UF,+80-20%,100V	72982	8131N145651 104Z
A28C862	283-0178-00			CAP.,FXD,CER DI:0.1UF,+80-20%,100V	72982	8131N145651 104Z
A28CR160	152-0141-02			SEMICOND DEVICE:SILICON,30V,150MA	01295	1N4152R
A28CR260	152-0141-02			SEMICOND DEVICE:SILICON,30V,150MA	01295	1N4152R
A28Q150	151-0190-05			TRANSISTOR:SILICON,NPN	80009	151-0190-05
A28Q151	151-0190-05			TRANSISTOR:SILICON,NPN	80009	151-0190-05
A28Q160	151-0190-05			TRANSISTOR:SILICON,NPN	80009	151-0190-05
A28Q161	151-0302-01			TRANSISTOR:SILICON,NPN,SEL	80009	151-0302-01
A28Q162	151-0302-01			TRANSISTOR:SILICON,NPN,SEL	80009	151-0302-01
A28Q163	151-0190-05			TRANSISTOR:SILICON,NPN	80009	151-0190-05
A28Q760	151-0625-00			TRANSISTOR:SILICON,PNP	03508	D45H11
A28Q855	151-0188-03			TRANSISTOR:SILICON,PNP,SEL	80009	151-0188-03
A28Q860	151-0625-00			TRANSISTOR:SILICON,PNP	03508	D45H11
A28R150	315-0203-00			RES.,FXD,CMPSN:20K OHM,5%,0.25W	01121	CB2035
A28R151	315-0303-00			RES.,FXD,CMPSN:30K OHM,5%,0.25W	01121	CB3035
A28R160	315-0332-00			RES.,FXD,CMPSN:3.3K OHM,5%,0.25W	01121	CB3325
A28R161	315-0122-00			RES.,FXD,CMPSN:1.2K OHM,5%,0.25W	01121	CB1225
A28R162	315-0272-00			RES.,FXD,CMPSN:2.7K OHM,5%,0.25W	01121	CB2725
A28R163	315-0300-00			RES.,FXD,CMPSN:30 OHM,5%,0.25W	01121	CB3005
A28R164	315-0240-00			RES.,FXD,CMPSN:24 OHM,5%,0.25W	01121	CB2405
A28R165	315-0620-00			RES.,FXD,CMPSN:62 OHM,5%,0.25W	01121	CB6205
A28R166	315-0681-00			RES.,FXD,CMPSN:680 OHM,5%,0.25W	01121	CB6815
A28R250	315-0622-00			RES.,FXD,CMPSN:6.2K OHM,5%,0.25W	01121	CB6225
A28R260	315-0472-00			RES.,FXD,CMPSN:4.7K OHM,5%,0.25W	01121	CB4725
A28R750	315-0103-00			RES.,FXD,CMPSN:10K OHM,5%,0.25W	01121	CB1035
A28R770	301-0471-00			RES.,FXD,CMPSN:470 OHM,5%,0.50W	01121	EB4715
A28R862	315-0102-00			RES.,FXD,CMPSN:1K OHM,5%,0.25W	01121	CB1025
A28R865	315-0472-00			RES.,FXD,CMPSN:4.7K OHM,5%,0.25W	01121	CB4725
A28U110	156-1323-01 ----- -----			MICROCIRCUIT,DI:1024 X 4 STATIC RAM (OPTION 2D ONLY)	80009	156-1323-01
A28U120	156-1323-01 ----- -----			MICROCIRCUIT,DI:1024 X 4 STATIC RAM (OPTION 2D ONLY)	80009	156-1323-01
A28U130	156-1323-01 ----- -----			MICROCIRCUIT,DI:1024 X 4 STATIC RAM (OPTION 2D ONLY)	80009	156-1323-01
A28U140	156-1323-01 ----- -----			MICROCIRCUIT,DI:1024 X 4 STATIC RAM (OPTION 2D ONLY)	80009	156-1323-01

http://manoman.sqhill.com

Component No.	Tektronix Part No.	Serial/Model No. Eff	Dscont	Name & Description	Mfr Code	Mfr Part Number
A28U210	156-1323-01			MICROCIRCUIT,DI:1024 X 4 STATIC RAM	80009	156-1323-01
	----- -----			(OPTION 2D ONLY)		
A28U220	156-1323-01			MICROCIRCUIT,DI:1024 X 4 STATIC RAM	80009	156-1323-01
	----- -----			(OPTION 2D ONLY)		
A28U230	156-1323-01			MICROCIRCUIT,DI:1024 X 4 STATIC RAM	80009	156-1323-01
	----- -----			(OPTION 2D ONLY)		
A28U240	156-1323-01			MICROCIRCUIT,DI:1024 X 4 STATIC RAM	80009	156-1323-01
	----- -----			(OPTION 2D ONLY)		
A28U250	156-0721-02			MICROCIRCUIT,DI:QUAD 2-IN NAND SCHMITT TRI	04713	SN74LS132NDS
A28U260	156-0381-02			MICROCIRCUIT,DI:QUAD 2-INP EXCL OR GATE	01295	SN74LS86
A28U310	156-1323-01			MICROCIRCUIT,DI:1024 X 4 STATIC RAM	80009	156-1323-01
A28U320	156-1323-01			MICROCIRCUIT,DI:1024 X 4 STATIC RAM	80009	156-1323-01
A28U330	156-1323-01			MICROCIRCUIT,DI:1024 X 4 STATIC RAM	80009	156-1323-01
A28U340	156-1323-01			MICROCIRCUIT,DI:1024 X 4 STATIC RAM	80009	156-1323-01
A28U350	156-0916-02			MICROCIRCUIT,DI:8-2 INP 3-STATE BFR,BURN	27014	DM81LS97
A28U360	156-0916-02			MICROCIRCUIT,DI:8-2 INP 3-STATE BFR,BURN	27014	DM81LS97
A28U410	156-1323-01			MICROCIRCUIT,DI:1024 X 4 STATIC RAM	80009	156-1323-01
A28U420	156-1323-01			MICROCIRCUIT,DI:1024 X 4 STATIC RAM	80009	156-1323-01
A28U430	156-1323-01			MICROCIRCUIT,DI:1024 X 4 STATIC RAM	80009	156-1323-01
A28U440	156-1323-01			MICROCIRCUIT,DI:1024 X 4 STATIC RAM	80009	156-1323-01
A28U450	156-0916-02			MICROCIRCUIT,DI:8-2 INP 3-STATE BFR,BURN	27014	DM81LS97
A28U460	156-0916-02			MICROCIRCUIT,DI:8-2 INP 3-STATE BFR,BURN	27014	DM81LS97
A28U510	156-1323-01			MICROCIRCUIT,DI:1024 X 4 STATIC RAM	80009	156-1323-01
A28U520	156-1323-01			MICROCIRCUIT,DI:1024 X 4 STATIC RAM	80009	156-1323-01
A28U530	156-1323-01			MICROCIRCUIT,DI:1024 X 4 STATIC RAM	80009	156-1323-01
A28U540	156-1323-01			MICROCIRCUIT,DI:1024 X 4 STATIC RAM	80009	156-1323-01
A28U550	156-0481-02			MICROCIRCUIT,DI:TRIPLE 3 INP & GATE	27014	DM74LS11NA+
A28U560	156-0736-02			MICROCIRCUIT,DI:BCD TO DECIMAL DCDR	80009	156-0736-02
A28U610	156-1323-01			MICROCIRCUIT,DI:1024 X 4 STATIC RAM	80009	156-1323-01
A28U620	156-1323-01			MICROCIRCUIT,DI:1024 X 4 STATIC RAM	80009	156-1323-01
A28U630	156-1323-01			MICROCIRCUIT,DI:1024 X 4 STATIC RAM	80009	156-1323-01
A28U640	156-1323-01			MICROCIRCUIT,DI:1024 X 4 STATIC RAM	80009	156-1323-01
A28U650	156-0916-02			MICROCIRCUIT,DI:8-2 INP 3-STATE BFR,BURN	27014	DM81LS97
A28U660	156-0720-02			MICROCIRCUIT,DI:HEX DRVR,4 TO2 LINE	01295	SN74LS368
A28U710	156-1323-01			MICROCIRCUIT,DI:1024 X 4 STATIC RAM	80009	156-1323-01
	----- -----			(OPTION 2D ONLY)		
A28U720	156-1323-01			MICROCIRCUIT,DI:1024 X 4 STATIC RAM	80009	156-1323-01
	----- -----			(OPTION 2D ONLY)		
A28U730	156-1323-01			MICROCIRCUIT,DI:1024 X 4 STATIC RAM	80009	156-1323-01
	----- -----			(OPTION 2D ONLY)		
A28U740	156-1323-01			MICROCIRCUIT,DI:1024 X 4 STATIC RAM	80009	156-1323-01
	----- -----			(OPTION 2D ONLY)		
A28U750	156-0382-02	B010100	B010380	MICROCIRCUIT,DI:QUAD 2-INP NAND GATE	01295	SN74LS00
A28U750	156-0030-03	B010381		MICROCIRCUIT,DI:QUAD 2-INPUT NAND GATE	27014	DM8000
A28U810	156-1323-01			MICROCIRCUIT,DI:1024 X 4 STATIC RAM	80009	156-1323-01
	----- -----			(OPTION 2D ONLY)		
A28U820	156-1323-01			MICROCIRCUIT,DI:1024 X 4 STATIC RAM	80009	156-1323-01
	----- -----			(OPTION 2D ONLY)		
A28U830	156-1323-01			MICROCIRCUIT,DI:1024 X 4 STATIC RAM	80009	156-1323-01
	----- -----			(OPTION 2D ONLY)		
A28U840	156-1323-01			MICROCIRCUIT,DI:1024 X 4 STATIC RAM	80009	156-1323-01
	----- -----			(OPTION 2D ONLY)		
A28VR870	152-0175-01			SEMICOND DEVICE:ZENER,0.4W,5.6V,5%	80009	152-0175-01

http://manoman.sqhill.com

Component No.	Tektronix Part No.	Serial/Model No. Eff	Dscont	Name & Description	Mfr Code	Mfr Part Number
A29	----- -----			CKT BOARD ASSY:DISPLAY		
A29C210	281-0775-00			CAP.,FXD,CER DI:0.1UF,20%,50V	72982	8005D9AABZ5U104M
A29C230	281-0775-00			CAP.,FXD,CER DI:0.1UF,20%,50V	72982	8005D9AABZ5U104M
A29C300	281-0775-00			CAP.,FXD,CER DI:0.1UF,20%,50V	72982	8005D9AABZ5U104M
A29C320	281-0775-00			CAP.,FXD,CER DI:0.1UF,20%,50V	72982	8005D9AABZ5U104M
A29C330	290-0782-00			CAP.,FXD,ELCTLT:4.7UF,+75-10%,35V	55680	35ULA4R7V-T
A29C410	281-0775-00			CAP.,FXD,CER DI:0.1UF,20%,50V	72982	8005D9AABZ5U104M
A29C430	281-0775-00			CAP.,FXD,CER DI:0.1UF,20%,50V	72982	8005D9AABZ5U104M
A29C520	281-0775-00			CAP.,FXD,CER DI:0.1UF,20%,50V	72982	8005D9AABZ5U104M
A29C701	281-0775-00			CAP.,FXD,CER DI:0.1UF,20%,50V	72982	8005D9AABZ5U104M
A29C720	281-0775-00			CAP.,FXD,CER DI:0.1UF,20%,50V	72982	8005D9AABZ5U104M
A29C810	281-0775-00			CAP.,FXD,CER DI:0.1UF,20%,50V	72982	8005D9AABZ5U104M
A29C830	281-0775-00			CAP.,FXD,CER DI:0.1UF,20%,50V	72982	8005D9AABZ5U104M
A29C900	281-0775-00			CAP.,FXD,CER DI:0.1UF,20%,50V	72982	8005D9AABZ5U104M
A29C920	281-0775-00			CAP.,FXD,CER DI:0.1UF,20%,50V	72982	8005D9AABZ5U104M
A29C930	281-0775-00			CAP.,FXD,CER DI:0.1UF,20%,50V	72982	8005D9AABZ5U104M
A29C1030	281-0775-00			CAP.,FXD,CER DI:0.1UF,20%,50V	72982	8005D9AABZ5U104M
A29C1120	281-0775-00			CAP.,FXD,CER DI:0.1UF,20%,50V	72982	8005D9AABZ5U104M
A29C1130	290-0782-00			CAP.,FXD,ELCTLT:4.7UF,+75-10%,35V	55680	35ULA4R7V-T
A29C1201	281-0775-00			CAP.,FXD,CER DI:0.1UF,20%,50V	72982	8005D9AABZ5U104M
A29C1202	281-0775-00			CAP.,FXD,CER DI:0.1UF,20%,50V	72982	8005D9AABZ5U104M
A29C1320	281-0815-00			CAP.,FXD,CER DI:0.027UF,20%,50V	72982	8005D9AABW5R273M
A29C1321	290-0745-00			CAP.,FXD,ELCTLT:22UF,+50-10%,25V	56289	502D225
A29C1322	283-0594-00			CAP.,FXD,MICA D:0.001UF,1%,100V	00853	D151F102F0
A29C1330	281-0814-00			CAP.,FXD,CER DI:100PF,10%,100V	04222	GC70-1-A101K
A29C1400	283-0177-00			CAP.,FXD,CER DI:1UF,+80-20%,25V	56289	273C5
A29C1401	281-0775-00			CAP.,FXD,CER DI:0.1UF,20%,50V	72982	8005D9AABZ5U104M
A29C1410	281-0775-00			CAP.,FXD,CER DI:0.1UF,20%,50V	72982	8005D9AABZ5U104M
A29C1411	283-0177-00			CAP.,FXD,CER DI:1UF,+80-20%,25V	56289	273C5
A29C1500	281-0775-00			CAP.,FXD,CER DI:0.1UF,20%,50V	72982	8005D9AABZ5U104M
A29C1510	281-0775-00			CAP.,FXD,CER DI:0.1UF,20%,50V	72982	8005D9AABZ5U104M
A29C1511	283-0260-00			CAP.,FXD,CER DI:5.6PF,5%,200V	72982	8111B200C0G569C
A29C1512	283-0645-00			CAP.,FXD,MICA D:790PF,1%,100V	00853	D151E791F0
A29C1520	281-0815-00			CAP.,FXD,CER DI:0.027UF,20%,50V	72982	8005D9AABW5R273M
A29C1600	281-0775-00			CAP.,FXD,CER DI:0.1UF,20%,50V	72982	8005D9AABZ5U104M
A29C1601	283-0752-00			CAP.,FXD,MICA D:345PF,1%,500V	00853	D155E3450F0
A29C1602	283-0752-00			CAP.,FXD,MICA D:345PF,1%,500V	00853	D155E3450F0
A29C1610	283-0625-00			CAP.,FXD,MICA D:220PF,1%,500V	00853	D105F221F0
A29C1611	283-0625-00			CAP.,FXD,MICA D:220PF,1%,500V	00853	D105F221F0
A29C1612	283-0696-00			CAP.,FXD,MICA D:2300PF,1%,500V	00853	D19-5E232F0
A29C1613	283-0696-00			CAP.,FXD,MICA D:2300PF,1%,500V	00853	D19-5E232F0
A29C1620	281-0775-00			CAP.,FXD,CER DI:0.1UF,20%,50V	72982	8005D9AABZ5U104M
A29C1700	283-0260-00			CAP.,FXD,CER DI:5.6PF,5%,200V	72982	8111B200C0G569C
A29C1710	283-0645-00			CAP.,FXD,MICA D:790PF,1%,100V	00853	D151E791F0
A29C1720	281-0775-00			CAP.,FXD,CER DI:0.1UF,20%,50V	72982	8005D9AABZ5U104M
A29C1820	281-0775-00			CAP.,FXD,CER DI:0.1UF,20%,50V	72982	8005D9AABZ5U104M
A29C1900	281-0775-00			CAP.,FXD,CER DI:0.1UF,20%,50V	72982	8005D9AABZ5U104M
A29C2010	281-0775-00			CAP.,FXD,CER DI:0.1UF,20%,50V	72982	8005D9AABZ5U104M
A29C2100	281-0775-00			CAP.,FXD,CER DI:0.1UF,20%,50V	72982	8005D9AABZ5U104M
A29C2210	281-0797-00			CAP.,FXD,CER DI:15PF,10%,100V	72982	8035D9AADC0G150K
A29C2300	283-0644-00			CAP.,FXD,MICA D:150PF,1%,500V	00853	D155E151F0
A29C2310	283-0629-00			CAP.,FXD,MICA D:62PF,1%,500V	00853	D105E620F0
A29C2400	283-0769-00			CAP.,FXD MICA D:278PF,1%,500V	00853	D15-5F278OF0
A29C2610	283-0177-00			CAP.,FXD,CER DI:1UF,+80-20%,25V	56289	273C5
A29C2611	281-0788-00			CAP.,FXD,CER DI:470PF,10%,100V	72982	8005H9AADW5R471K
A29C2612	285-0685-00			CAP.,FXD,PLSTC:0.0068UF,10%,100V	56289	292P68292

http://manoman.sqhill.com

Component No.	Tektronix Part No.	Serial/Model No. Eff	Dscont	Name & Description	Mfr Code	Mfr Part Number
A29C2620	281-0775-00			CAP.,FXD,CER DI:0.1UF,20%,50V	72982	8005D9AABZ5U104I
A29C2630	281-0775-00			CAP.,FXD,CER DI:0.1UF,20%,50V	72982	8005D9AABZ5U104I
A29C2700	281-0788-00			CAP.,FXD,CER DI:470PF,10%,100V	72982	8005H9AADW5R471I
A29C2720	281-0810-00			CAP.,FXD,CER DI:5.6PF,0.5%,100V	72982	1035D2ADC0G569D
A29C2730	290-0745-00			CAP.,FXD,ELCTLT:22UF,+50-10%,25V	56289	502D225
A29C2731	290-0745-00			CAP.,FXD,ELCTLT:22UF,+50-10%,25V	56289	502D225
A29C2830	290-0745-00			CAP.,FXD,ELCTLT:22UF,+50-10%,25V	56289	502D225
A29C2831	290-0745-00			CAP.,FXD,ELCTLT:22UF,+50-10%,25V	56289	502D225
A29CR1000	152-0141-02			SEMICOND DEVICE:SILICON,30V,150MA	01295	1N4152R
A29CR1100	152-0141-02			SEMICOND DEVICE:SILICON,30V,150MA	01295	1N4152R
A29CR1101	152-0141-02			SEMICOND DEVICE:SILICON,30V,150MA	01295	1N4152R
A29CR1110	152-0141-02			SEMICOND DEVICE:SILICON,30V,150MA	01295	1N4152R
A29CR1111	152-0141-02			SEMICOND DEVICE:SILICON,30V,150MA	01295	1N4152R
A29CR1210	152-0141-02			SEMICOND DEVICE:SILICON,30V,150MA	01295	1N4152R
A29CR1710	152-0075-00			SEMICOND DEVICE:GE,25V,40MA	14433	G866
A29CR1810	152-0141-02			SEMICOND DEVICE:SILICON,30V,150MA	01295	1N4152R
A29CR2130	152-0322-00			SEMICOND DEVICE:SILICON,15V,HOT CARRIER	50434	5082-2672
A29CR2131	152-0141-02			SEMICOND DEVICE:SILICON,30V,150MA	01295	1N4152R
A29CR2301	152-0322-00			SEMICOND DEVICE:SILICON,15V,HOT CARRIER	50434	5082-2672
A29CR2332	152-0141-02			SEMICOND DEVICE:SILICON,30V,150MA	01295	1N4152R
A29CR2430	152-0141-02			SEMICOND DEVICE:SILICON,30V,150MA	01295	1N4152R
A29CR2431	152-0141-02			SEMICOND DEVICE:SILICON,30V,150MA	01295	1N4152R
A29CR2433	152-0141-02			SEMICOND DEVICE:SILICON,30V,150MA	01295	1N4152R
A29CR2434	152-0141-02			SEMICOND DEVICE:SILICON,30V,150MA	01295	1N4152R
A29CR2435	152-0141-02			SEMICOND DEVICE:SILICON,30V,150MA	01295	1N4152R
A29CR2436	152-0141-02			SEMICOND DEVICE:SILICON,30V,150MA	01295	1N4152R
A29CR2437	152-0141-02			SEMICOND DEVICE:SILICON,30V,150MA	01295	1N4152R
A29CR2620	152-0333-00			SEMICOND DEVICE:SILICON,55V,200MA	07263	FDH-6012
A29CR2621	152-0333-00			SEMICOND DEVICE:SILICON,55V,200MA	07263	FDH-6012
A29CR2622	152-0333-00			SEMICOND DEVICE:SILICON,55V,200MA	07263	FDH-6012
A29CR2623	152-0333-00			SEMICOND DEVICE:SILICON,55V,200MA	07263	FDH-6012
A29CR2624	152-0333-00			SEMICOND DEVICE:SILICON,55V,200MA	07263	FDH-6012
A29CR2625	152-0333-00			SEMICOND DEVICE:SILICON,55V,200MA	07263	FDH-6012
A29CR2626	152-0333-00			SEMICOND DEVICE:SILICON,55V,200MA	07263	FDH-6012
A29CR2627	152-0333-00			SEMICOND DEVICE:SILICON,55V,200MA	07263	FDH-6012
A29CR2630	152-0333-00			SEMICOND DEVICE:SILICON,55V,200MA	07263	FDH-6012
A29CR2631	152-0333-00			SEMICOND DEVICE:SILICON,55V,200MA	07263	FDH-6012
A29CR2632	152-0333-00			SEMICOND DEVICE:SILICON,55V,200MA	07263	FDH-6012
A29CR2633	152-0333-00			SEMICOND DEVICE:SILICON,55V,200MA	07263	FDH-6012
A29CR2710	152-0141-02			SEMICOND DEVICE:SILICON,30V,150MA	01295	1N4152R
A29CR2720	152-0333-00			SEMICOND DEVICE:SILICON,55V,200MA	07263	FDH-6012
A29CR2721	152-0333-00			SEMICOND DEVICE:SILICON,55V,200MA	07263	FDH-6012
A29CR2722	152-0333-00			SEMICOND DEVICE:SILICON,55V,200MA	07263	FDH-6012
A29CR2723	152-0333-00			SEMICOND DEVICE:SILICON,55V,200MA	07263	FDH-6012
A29CR2724	152-0333-00			SEMICOND DEVICE:SILICON,55V,200MA	07263	FDH-6012
A29CR2725	152-0333-00			SEMICOND DEVICE:SILICON,55V,200MA	07263	FDH-6012
A29CR2726	152-0333-00			SEMICOND DEVICE:SILICON,55V,200MA	07263	FDH-6012
A29CR2727	152-0333-00			SEMICOND DEVICE:SILICON,55V,200MA	07263	FDH-6012
A29CR2730	152-0333-00			SEMICOND DEVICE:SILICON,55V,200MA	07263	FDH-6012
A29CR2731	152-0333-00			SEMICOND DEVICE:SILICON,55V,200MA	07263	FDH-6012
A29CR2732	152-0333-00			SEMICOND DEVICE:SILICON,55V,200MA	07263	FDH-6012
A29CR2733	152-0333-00			SEMICOND DEVICE:SILICON,55V,200MA	07263	FDH-6012
A29CR2810	152-0141-02			SEMICOND DEVICE:SILICON,30V,150MA	01295	1N4152R
A29CR2820	152-0333-00			SEMICOND DEVICE:SILICON,55V,200MA	07263	FDH-6012
A29CR2821	152-0333-00			SEMICOND DEVICE:SILICON,55V,200MA	07263	FDH-6012
A29CR2822	152-0333-00			SEMICOND DEVICE:SILICON,55V,200MA	07263	FDH-6012

http://manoman.sqhill.com

Component No.	Tektronix Part No.	Serial/Model No. Eff	Dscont	Name & Description	Mfr Code	Mfr Part Number
A29CR2823	152-0333-00			SEMICOND DEVICE:SILICON,55V,200MA	07263	FDH-6012
A29CR2824	152-0333-00			SEMICOND DEVICE:SILICON,55V,200MA	07263	FDH-6012
A29CR2830	152-0333-00			SEMICOND DEVICE:SILICON,55V,200MA	07263	FDH-6012
A29CR2831	152-0333-00			SEMICOND DEVICE:SILICON,55V,200MA	07263	FDH-6012
A29CR2832	152-0333-00			SEMICOND DEVICE:SILICON,55V,200MA	07263	FDH-6012
A29L1320	108-0245-00			COIL,RF:3.9UH	76493	B6310-1
A29L1601	108-0800-00			COIL,RF:820MH	71279	550-3399-48
A29L1610	108-0800-00			COIL,RF:820MH	71279	550-3399-48
A29L1611	108-0800-00			COIL,RF:820MH	71279	550-3399-48
A29L1710	108-0800-00			COIL,RF:820MH	71279	550-3399-48
A29L2630	108-0245-00			COIL,RF:3.9UH	76493	B6310-1
A29L2631	108-0245-00			COIL,RF:3.9UH	76493	B6310-1
A29L2730	108-0245-00			COIL,RF:3.9UH	76493	B6310-1
A29L2731	108-0245-00			COIL,RF:3.9UH	76493	B6310-1
A29Q1820	151-0188-03			TRANSISTOR:SILICON,PNP,SEL	80009	151-0188-03
A29Q1830	156-0048-00			MICROCIRCUIT,LI:FIVE NPN TRANSISTOR ARRAY	02735	CA3046
A29Q1930	156-0048-00			MICROCIRCUIT,LI:FIVE NPN TRANSISTOR ARRAY	02735	CA3046
A29Q2030	151-0188-03			TRANSISTOR:SILICON,PNP,SEL	80009	151-0188-03
A29Q2400	151-0190-05	B010100	B010175	TRANSISTOR:SILICON,NPN	80009	151-0190-05
A29Q2400	151-0192-03	B010176		TRANSISTOR:SILICON,NPN	80009	151-0192-03
A29Q2500	151-0190-05			TRANSISTOR:SILICON,NPN	80009	151-0190-05
A29Q2600	151-0190-05			TRANSISTOR:SILICON,NPN	80009	151-0190-05
A29Q2601	151-0188-03			TRANSISTOR:SILICON,PNP,SEL	80009	151-0188-03
A29Q2710	151-0232-00			TRANSISTOR:SILICON,NPN,DUAL	80009	151-0232-00
A29R100	315-0472-00			RES.,FXD,CMPSN:4.7K OHM,5%,0.25W	01121	CB4725
A29R700	315-0103-00			RES.,FXD,CMPSN:10K OHM,5%,0.25W	01121	CB1035
A29R800	315-0244-00			RES.,FXD,CMPSN:240K OHM,5%,0.25W	01121	CB2445
A29R801	315-0103-00			RES.,FXD,CMPSN:10K OHM,5%,0.25W	01121	CB1035
A29R900	315-0105-00			RES.,FXD,CMPSN:1M OHM,5%,0.25W	01121	CB1055
A29R901	315-0103-00			RES.,FXD,CMPSN:10K OHM,5%,0.25W	01121	CB1035
A29R1000	315-0623-00			RES.,FXD,CMPSN:62K OHM,5%,0.25W	01121	CB6235
A29R1001	315-0514-00			RES.,FXD,CMPSN:510K OHM,5%,0.25W	01121	CB5145
A29R1002	321-0289-01			RES.,FXD,FILM:10K OHM,0.5%,0.125W	91637	MFF1816G10001D
A29R1004	321-0306-00			RES.,FXD,FILM:15K OHM,1%,0.125W	91637	MFF1816G15001F
A29R1005	321-0685-00			RES.,FXD,FILM:30K OHM,0.5%,0.125W	91637	MFF1816D30001D
A29R1100	311-1286-00			RES.,VAR,NONWIR:50K OHM,10%,0.5W	32997	3329W-L58-503
A29R1101	321-0289-01			RES.,FXD,FILM:10K OHM,0.5%,0.125W	91637	MFF1816G10001D
A29R1102	321-0306-00			RES.,FXD,FILM:15K OHM,1%,0.125W	91637	MFF1816G15001F
A29R1103	321-0685-00			RES.,FXD,FILM:30K OHM,0.5%,0.125W	91637	MFF1816D30001D
A29R1104	321-0280-00			RES.,FXD,FILM:8.06K OHM,1%,0.125W	91637	MFF1816G80600F
A29R1105	315-0912-00			RES.,FXD,CMPSN:9.1K OHM,5%,0.25W	01121	CB9125
A29R1106	311-1286-00			RES.,VAR,NONWIR:50K OHM,10%,0.5W	32997	3329W-L58-503
A29R1110	321-0289-01			RES.,FXD,FILM:10K OHM,0.5%,0.125W	91637	MFF1816G10001D
A29R1200	311-1284-00			RES.,VAR,NONWIR:20K OHM,10%,0.5W	32997	3329W-L58-203
A29R1201	315-0432-00			RES.,FXD,CMPSN:4.3K OHM,5%,0.25W	01121	CB4325
A29R1202	321-0306-00			RES.,FXD,FILM:15K OHM,1%,0.125W	91637	MFF1816G15001F
A29R1203	321-0289-01			RES.,FXD,FILM:10K OHM,0.5%,0.125W	91637	MFF1816G10001D
A29R1204	315-0101-00			RES.,FXD,CMPSN:100 OHM,5%,0.25W	01121	CB1015
A29R1205	311-1282-00			RES.,VAR,NONWIR:5K OHM,10%,0.50W	32997	3329W-L58-502
A29R1210	315-0362-00			RES.,FXD,CMPSN:3.6K OHM,5%,0.25W	01121	CB3625
A29R1211	315-0513-00			RES.,FXD,CMPSN:51K OHM,5%,0.25W	01121	CB5135
A29R1300	311-1918-00			RES.,VAR,NONWIR:2K OHM,10%,0.50W	73138	72-199-0
A29R1301	321-1696-07			RES.,FXD,FILM:6K OHM,0.1%,0.125W	07716	CEAE60000B
A29R1310	315-0432-00			RES.,FXD,CMPSN:4.3K OHM,5%,0.25W	01121	CB4325
A29R1320	315-0103-00			RES.,FXD,CMPSN:10K OHM,5%,0.25W	01121	CB1035
A29R1330	307-0445-00			RES NTWK,FXD,FI:4.7K OHM,20%,(9) RES	91637	MSP10A01-472M

http://manoman.sqhill.com

Component No.	Tektronix Part No.	Serial/Model No. Eff	Dscont	Name & Description	Mfr Code	Mfr Part Number
A29R1331	315-0203-00			RES.,FXD,CMPSN:20K OHM,5%,0.25W	01121	CB2035
A29R1400	315-0432-00			RES.,FXD,CMPSN:4.3K OHM,5%,0.25W	01121	CB4325
A29R1403	321-1656-03			RES.,FXD,FILM:27K OHM,0.25%,0.125W	91637	MFF1816D27001C
A29R1404	321-1656-03			RES.,FXD,FILM:27K OHM,0.25%,0.125W	91637	MFF1816D27001C
A29R1410	315-0101-00			RES.,FXD,CMPSN:100 OHM,5%,0.25W	01121	CB1015
A29R1500	321-1656-03			RES.,FXD,FILM:27K OHM,0.25%,0.125W	91637	MFF1816D27001C
A29R1501	315-0472-00			RES.,FXD,CMPSN:4.7K OHM,5%,0.25W	01121	CB4725
A29R1510	315-0432-00			RES.,FXD,CMPSN:4.3K OHM,5%,0.25W	01121	CB4325
A29R1511	321-0248-00			RES.,FXD,FILM:3.74K OHM,1%,0.125W	91637	MFF1816G37400F
A29R1512	321-0222-03			RES.,FXD,FILM:2K OHM,0.25%,0.125W	91637	MFF1816D20000C
A29R1513	321-0268-00			RES.,FXD,FILM:6.04K OHM,1%,0.125W	91637	MFF1816G60400F
A29R1520	307-0445-00			RES NTWK,FXD,FI:4.7K OHM,20%,(9) RES	91637	MSP10A01-472M
A29R1530	307-0445-00			RES NTWK,FXD,FI:4.7K OHM,20%,(9) RES	91637	MSP10A01-472M
A29R1600	321-1656-03			RES.,FXD,FILM:27K OHM,0.25%,0.125W	91637	MFF1816D27001C
A29R1601	315-0472-00			RES.,FXD,CMPSN:4.7K OHM,5%,0.25W	01121	CB4725
A29R1602	315-0752-00			RES.,FXD,CMPSN:7.5K OHM,5%,0.25W	01121	CB7525
A29R1603	321-0254-00			RES.,FXD,FILM:4.32K OHM,1%,0.125W	91637	MFF1816G43200F
A29R1610	321-0222-03			RES.,FXD,FILM:2K OHM,0.25%,0.125W	91637	MFF1816D20000C
A29R1620	311-1286-00			RES.,VAR,NONWIR:50K OHM,10%,0.5W	32997	3329W-L58-503
A29R1621	311-1278-00			RES.,VAR,NONWIR:250 OHM,10%,0.5W	32997	3329W-L58-251
A29R1625	311-1286-00			RES.,VAR,NONWIR:50K OHM,10%,0.5W	32997	3329W-L58-503
A29R1626	321-0219-00			RES.,FXD,FILM:1.87K OHM,1%,0.125W	91637	MFF1816G18700F
A29R1628	321-0641-00			RES.,FXD,FILM:1.8K OHM,1%,0.125W	91637	MFF1816G18000F
A29R1630	321-0392-00			RES.,FXD,FILM:118K OHM,1%,0.125W	91637	MFF1816G11802F
A29R1631	321-0126-00			RES.,FXD,FILM:200 OHM,1%,0.125W	91637	MFF1816G200R0F
A29R1635	321-0126-00			RES.,FXD,FILM:200 OHM,1%,0.125W	91637	MFF1816G200R0F
A29R1700	311-1240-00			RES.,VAR,NONWIR:25K OHM,10%,0.50W	73138	72-30-0
A29R1701	321-0222-03			RES.,FXD,FILM:2K OHM,0.25%,0.125W	91637	MFF1816D20000C
A29R1702	321-0222-03			RES.,FXD,FILM:2K OHM,0.25%,0.125W	91637	MFF1816D20000C
A29R1720	311-1278-00			RES.,VAR,NONWIR:250 OHM,10%,0.5W	32997	3329W-L58-251
A29R1721	321-0114-00			RES.,FXD,FILM:150 OHM,1%,0.125W	91637	MFF1816G150R0F
A29R1723	321-0219-00			RES.,FXD,FILM:1.87K OHM,1%,0.125W	91637	MFF1816G18700F
A29R1730	321-0641-00			RES.,FXD,FILM:1.8K OHM,1%,0.125W	91637	MFF1816G18000F
A29R1735	321-0392-00			RES.,FXD,FILM:118K OHM,1%,0.125W	91637	MFF1816G11802F
A29R1820	315-0102-00			RES.,FXD,CMPSN:1K OHM,5%,0.25W	01121	CB1025
A29R1821	315-0182-00			RES.,FXD,CMPSN:1.8K OHM,5%,0.25W	01121	CB1825
A29R1830	315-0153-00			RES.,FXD,CMPSN:15K OHM,5%,0.25W	01121	CB1535
A29R1831	315-0472-00			RES.,FXD,CMPSN:4.7K OHM,5%,0.25W	01121	CB4725
A29R1832	321-0263-00			RES.,FXD,FILM:5.36K OHM,1%,0.125W	91637	MFF1816G53600F
A29R1920	315-0751-00			RES.,FXD,CMPSN:750 OHM,5%,0.25W	01121	CB7515
A29R1921	315-0152-00			RES.,FXD,CMPSN:1.5K OHM,5%,0.25W	01121	CB1525
A29R1922	315-0303-00			RES.,FXD,CMPSN:30K OHM,5%,0.25W	01121	CB3035
A29R1923	315-0303-00			RES.,FXD,CMPSN:30K OHM,5%,0.25W	01121	CB3035
A29R1930	321-0263-00			RES.,FXD,FILM:5.36K OHM,1%,0.125W	91637	MFF1816G53600F
A29R2020	315-0182-00			RES.,FXD,CMPSN:1.8K OHM,5%,0.25W	01121	CB1825
A29R2030	315-0472-00			RES.,FXD,CMPSN:4.7K OHM,5%,0.25W	01121	CB4725
A29R2031	315-0222-00			RES.,FXD,CMPSN:2.2K OHM,5%,0.25W	01121	CB2225
A29R2032	315-0472-00			RES.,FXD,CMPSN:4.7K OHM,5%,0.25W	01121	CB4725
A29R2200	311-1248-00			RES.,VAR,NONWIR:500 OHM,10%,0.50W	73138	72-23-0
A29R2201	315-0391-00			RES.,FXD,CMPSN:390 OHM,5%,0.25W	01121	CB3915
A29R2220	307-0445-00			RES NTWK,FXD,FI:4.7K OHM,20%,(9) RES	91637	MSP10A01-472M
A29R2230	315-0102-00			RES.,FXD,CMPSN:1K OHM,5%,0.25W	01121	CB1025
A29R2231	315-0103-00			RES.,FXD,CMPSN:10K OHM,5%,0.25W	01121	CB1035
A29R2232	315-0102-00			RES.,FXD,CMPSN:1K OHM,5%,0.25W	01121	CB1025
A29R2233	315-0512-00			RES.,FXD,CMPSN:5.1K OHM,5%,0.25W	01121	CB5125
A29R2234	315-0102-00			RES.,FXD,CMPSN:1K OHM,5%,0.25W	01121	CB1025

http://manoman.sqhill.com

Component No.	Tektronix Part No.	Serial/Model No. Eff	Dscont	Name & Description	Mfr Code	Mfr Part Number
A29R2236	315-0102-00			RES.,FXD,CMPSN:1K OHM,5%,0.25W	01121	CB1025
A29R2300	315-0393-00			RES.,FXD,CMPSN:39K OHM,5%,0.25W	01121	CB3935
A29R2302	315-0393-00			RES.,FXD,CMPSN:39K OHM,5%,0.25W	01121	CB3935
A29R2310	315-0393-00			RES.,FXD,CMPSN:39K OHM,5%,0.25W	01121	CB3935
A29R2311	315-0751-00			RES.,FXD,CMPSN:750 OHM,5%,0.25W	01121	CB7515
A29R2312	315-0751-00			RES.,FXD,CMPSN:750 OHM,5%,0.25W	01121	CB7515
A29R2330	315-0751-00			RES.,FXD,CMPSN:750 OHM,5%,0.25W	01121	CB7515
A29R2331	315-0751-00			RES.,FXD,CMPSN:750 OHM,5%,0.25W	01121	CB7515
A29R2332	315-0751-00			RES.,FXD,CMPSN:750 OHM,5%,0.25W	01121	CB7515
A29R2333	315-0751-00			RES.,FXD,CMPSN:750 OHM,5%,0.25W	01121	CB7515
A29R2334	315-0751-00			RES.,FXD,CMPSN:750 OHM,5%,0.25W	01121	CB7515
A29R2335	315-0751-00			RES.,FXD,CMPSN:750 OHM,5%,0.25W	01121	CB7515
A29R2336	315-0751-00			RES.,FXD,CMPSN:750 OHM,5%,0.25W	01121	CB7515
A29R2337	315-0751-00			RES.,FXD,CMPSN:750 OHM,5%,0.25W	01121	CB7515
A29R2400	315-0302-00			RES.,FXD,CMPSN:3K OHM,5%,0.25W	01121	CB3025
A29R2420	315-0472-00			RES.,FXD,CMPSN:4.7K OHM,5%,0.25W	01121	CB4725
A29R2500	321-0403-00			RES.,FXD,FILM:154K OHM,1%,0.125W	91637	MFF1816G15402F
A29R2501	321-0372-00			RES.,FXD,FILM:73.2K OHM,1%,0.125W	91637	MFF1816G73201F
A29R2502	321-0262-00			RES.,FXD,FILM:5.23K OHM,1%,0.125W	91637	MFF1816G52300F
A29R2503	315-0202-00			RES.,FXD,CMPSN:2K OHM,5%,0.25W	01121	CB2025
A29R2600	311-1248-00			RES.,VAR,NONWIR:500 OHM,10%,0.50W	73138	72-23-0
A29R2601	315-0153-00			RES.,FXD,CMPSN:15K OHM,5%,0.25W	01121	CB1535
A29R2602	315-0133-00			RES.,FXD,CMPSN:13K OHM,5%,0.25W	01121	CB1335
A29R2610	315-0302-00			RES.,FXD,CMPSN:3K OHM,5%,0.25W	01121	CB3025
A29R2611	315-0393-00			RES.,FXD,CMPSN:39K OHM,5%,0.25W	01121	CB3935
A29R2700	321-0259-00			RES.,FXD,FILM:4.87K OHM,1%,0.125W	91637	MFF1816G48700F
A29R2701	315-0752-00			RES.,FXD,CMPSN:7.5K OHM,5%,0.25W	01121	CB7525
A29R2710	315-0124-00			RES.,FXD,CMPSN:120K OHM,5%,0.25W	01121	CB1245
A29R2711	315-0153-00			RES.,FXD,CMPSN:15K OHM,5%,0.25W	01121	CB1535
A29R2720	315-0104-00			RES.,FXD,CMPSN:100K OHM,5%,0.25W	01121	CB1045
A29R2721	321-0210-00			RES.,FXD,FILM:1.5K OHM,1%,0.125W	91637	MFF1816G15000F
A29R2802	315-0304-00			RES.,FXD,CMPSN:300K OHM,5%,0.25W	01121	CB3045
A29R2810	315-0751-00			RES.,FXD,CMPSN:750 OHM,5%,0.25W	01121	CB7515
A29RT1720	307-0126-00			RES.,THERMAL:100 OHM,10%	14193	2D21-101-D
A29U100	156-0480-02			MICROCIRCUIT,DI:QUAD 2 INP & GATE	01295	SN74LS08NP3
A29U110	156-0382-02			MICROCIRCUIT,DI:QUAD 2-INP NAND GATE	01295	SN74LS00
A29U120	156-0479-02			MICROCIRCUIT,DI:QUAD 2-INP ORGATE	01295	SN74LS32NP3
A29U130	156-0388-03			MICROCIRCUIT,DI:DUAL D FLIP-FLOP	07263	74LS74A
A29U200	156-0479-02			MICROCIRCUIT,DI:QUAD 2-INP ORGATE	01295	SN74LS32NP3
A29U210	156-0381-02			MICROCIRCUIT,DI:QUAD 2-INP EXCL OR GATE	01295	SN74LS86
A29U220	156-0388-03			MICROCIRCUIT,DI:DUAL D FLIP-FLOP	07263	74LS74A
A29U230	156-0388-03			MICROCIRCUIT,DI:DUAL D FLIP-FLOP	07263	74LS74A
A29U300	156-0382-02			MICROCIRCUIT,DI:QUAD 2-INP NAND GATE	01295	SN74LS00
A29U310	156-0479-02			MICROCIRCUIT,DI:QUAD 2-INP ORGATE	01295	SN74LS32NP3
A29U320	156-0720-02			MICROCIRCUIT,DI:HEX DRVR,4 TO2 LINE	01295	SN74LS368
A29U330	156-0465-02			MICROCIRCUIT,DI:8 INP NAND GATE	01295	SN74LS30NP3
A29U400	156-0480-02			MICROCIRCUIT,DI:QUAD 2 INP & GATE	01295	SN74LS08NP3
A29U410	156-0471-02			MICROCIRCUIT,DI:DUAL 4/1 DATA SEL	80009	156-0471-02
A29U420	156-0798-02			MICROCIRCUIT,DI:DUAL 14 TO 1 LINE SEL/MUX	01295	SN74LS153
A29U430	156-0388-03			MICROCIRCUIT,DI:DUAL D FLIP-FLOP	07263	74LS74A
A29U500	156-0798-02			MICROCIRCUIT,DI:DUAL 14 TO 1 LINE SEL/MUX	01295	SN74LS153
A29U510	156-0735-02			MICROCIRCUIT,DI:4 BIT BISTABLE LCH,BURN-IN	80009	156-0735-02
A29U520	156-0798-02			MICROCIRCUIT,DI:DUAL 14 TO 1 LINE SEL/MUX	01295	SN74LS153
A29U530	156-0479-02			MICROCIRCUIT,DI:QUAD 2-INP ORGATE	01295	SN74LS32NP3
A29U600	156-0479-02			MICROCIRCUIT,DI:QUAD 2-INP ORGATE	01295	SN74LS32NP3
A29U610	156-0994-02			MICROCIRCUIT,DI:8 INPUT DATA SEL/MUX	01295	SN74LS151NP3

http://manoman.sqhill.com

Component No.	Tektronix Part No.	Serial/Model No. Eff	Dscont	Name & Description	Mfr Code	Mfr Part Number
A29U620	160-0367-00			MICROCIRCUIT,DI:1024 X 8 ROM	80009	160-0367-00
A29U630	156-0865-02			MICROCIRCUIT,DI:OCTAL D-TYPE FF W/CLEAR	01295	SN74LS273NP3
A29U700	156-0412-02			MICROCIRCUIT,DI:SYN 4 BIT UP-DOWN CNTR	80009	156-0412-02
A29U710	156-0412-02			MICROCIRCUIT,DI:SYN 4 BIT UP-DOWN CNTR	80009	156-0412-02
A29U720	156-1045-01			MICROCIRCUIT,DI:QUAD 2 INPUT MUX W/STORAGE	80009	156-1045-01
A29U730	156-1045-01			MICROCIRCUIT,DI:QUAD 2 INPUT MUX W/STORAGE	80009	156-1045-01
A29U800	156-0412-02			MICROCIRCUIT,DI:SYN 4 BIT UP-DOWN CNTR	80009	156-0412-02
A29U810	156-0679-01			MICROCIRCUIT,DI:4 BIT BINARY ADDER,BURN-IN	04713	SN74LS283NDS
A29U820	156-0784-00			MICROCIRCUIT,DI:SYNC 4 BIT BINARY COUNTER	01295	SN74LS163AN
A29U830	156-0916-02			MICROCIRCUIT,DI:8-2 INP 3-STATE BFR,BURN	27014	DM81LS97
A29U900	156-0927-02			MICROCIRCUIT,LI:DIGITAL TO ANALOG CONVERT	80009	156-0927-02
A29U910	156-0784-00			MICROCIRCUIT,DI:SYNC 4 BIT BINARY COUNTER	01295	SN74LS163AN
A29U920	156-0530-02			MICROCIRCUIT,DI:QUAD 2 INP MUX	01295	SN74LS157P3
A29U930	156-0916-02			MICROCIRCUIT,DI:8-2 INP 3-STATE BFR,BURN	27014	DM81LS97
A29U1010	156-0927-02			MICROCIRCUIT,LI:DIGITAL TO ANALOG CONVERT	80009	156-0927-02
A29U1020	156-0391-02			MICROCIRCUIT,DI:HEX LATCH W/CLEAR	01295	SN74LS174
A29U1030	156-0916-02			MICROCIRCUIT,DI:8-2 INP 3-STATE BFR,BURN	27014	DM81LS97
A29U1120	156-0784-00			MICROCIRCUIT,DI:SYNC 4 BIT BINARY COUNTER	01295	SN74LS163AN
A29U1130	156-1172-01			MICROCIRCUIT,DI:DUAL 4 BIT CNTR,BURN IN	01295	SN74LS393
A29U1200	156-1236-00			MICROCIRCUIT,INTFC:DUAL SPST ANALOG SWITCH	80009	156-1236-00
A29U1220	155-0014-01			MICROCIRCUIT,DI:ML,ANALOG TO DECIMAL CONV	80009	155-0014-01
A29U1230	156-1177-01			MICROCIRCUIT,DI:10/4 LINE PRIORITY ENCODER	80009	156-1177-01
A29U1300	156-1236-00			MICROCIRCUIT,INTFC:DUAL SPST ANALOG SWITCH	80009	156-1236-00
A29U1305	156-0067-12			MICROCIRCUIT,LI:OPERATIONAL AMPLIFIER	04713	MC1741CU
A29U1310	156-1236-00			MICROCIRCUIT,INTFC:DUAL SPST ANALOG SWITCH	80009	156-1236-00
A29U1330	156-0405-00			MICROCIRCUIT,DI:DUAL RETRIG MONOSTABLE MV	07263	9602 (PC OR DC)
A29U1410	156-1236-00			MICROCIRCUIT,INTFC:DUAL SPST ANALOG SWITCH	80009	156-1236-00
A29U1420	156-1176-01			MICROCIRCUIT,DI:8/3 LINE PRIORITY ENCODER	80009	156-1176-01
A29U1430	156-1176-01			MICROCIRCUIT,DI:8/3 LINE PRIORITY ENCODER	80009	156-1176-01
A29U1500	156-0742-02			MICROCIRCUIT,LI:OPERATIONAL AMPLIFIER,SEL	01295	LM318P3
A29U1505	156-0742-02			MICROCIRCUIT,LI:OPERATIONAL AMPLIFIER,SEL	01295	LM318P3
A29U1520	155-0014-01			MICROCIRCUIT,DI:ML,ANALOG TO DECIMAL CONV	80009	155-0014-01
A29U1530	156-0386-02			MICROCIRCUIT,DI:TRIPLE 3 INP NAND GATE	01295	SN74LS10NP3
A29U1620	156-1191-01			MICROCIRCUIT,LI:DUAL BI-FET OP-AMP,8 DIP	01295	TL072CP
A29U1700	156-0385-02			MICROCIRCUIT,DI:HEX INVERTER	01295	SN74LS04
A29U1720	156-1211-00			MICROCKT,INTFC:QUAD SPST SWITCH,2NC,2NO	80009	156-1211-00
A29U1730	156-1236-00			MICROCIRCUIT,INTFC:DUAL SPST ANALOG SWITCH	80009	156-1236-00
A29U1800	156-0464-02			MICROCIRCUIT,DI:DUAL 4 INP NAND GATE	01295	SN74LS20
A29U1810	156-0798-02			MICROCIRCUIT,DI:DUAL 14 TO 1 LINE SEL/MUX	01295	SN74LS153
A29U1820	156-0383-02			MICROCIRCUIT,DI:QUAD 2-INP NOR GATE	01295	SN74LS02
A29U1900	156-0412-02			MICROCIRCUIT,DI:SYN 4 BIT UP-DOWN CNTR	80009	156-0412-02
A29U1910	156-0479-02			MICROCIRCUIT,DI:QUAD 2-INP ORGATE	01295	SN74LS32NP3
A29U1920	156-0387-02			MICROCIRCUIT,DI:DUAL J-K FF,BURN IN	80009	156-0387-02
A29U2000	156-0412-02			MICROCIRCUIT,DI:SYN 4 BIT UP-DOWN CNTR	80009	156-0412-02
A29U2010	156-0480-02			MICROCIRCUIT,DI:QUAD 2 INP & GATE	01295	SN74LS08NP3
A29U2020	156-0382-02			MICROCIRCUIT,DI:QUAD 2-INP NAND GATE	01295	SN74LS00
A29U2100	156-0331-00			MICROCIRCUIT,DI:DUAL D-TYPE,FLIP-FLOP	80009	156-0331-00
A29U2110	156-0464-02			MICROCIRCUIT,DI:DUAL 4 INP NAND GATE	01295	SN74LS20
A29U2120	156-0798-02			MICROCIRCUIT,DI:DUAL 14 TO 1 LINE SEL/MUX	01295	SN74LS153
A29U2130	156-0479-02			MICROCIRCUIT,DI:QUAD 2-INP ORGATE	01295	SN74LS32NP3
A29U2310	156-0645-02			MICROCIRCUIT,DI:SCHMITT-TRIG POS-NAND	01295	SN74LS14
A29U2320	155-0017-00			MICROCIRCUIT,DI:ML,ZERO LOGIC COUNTER	80009	155-0017-00
A29U2410	156-0480-02			MICROCIRCUIT,DI:QUAD 2 INP & GATE	01295	SN74LS08NP3
A29U2420	156-0646-02			MICROCIRCUIT,DI:4 BIT BINARY COUNTER	01295	SN74LS93

http://manoman.sqhill.com

Component No.	Tektronix Part No.	Serial/Model No. Eff	Dscont	Name & Description	Mfr Code	Mfr Part Number
A29U2530	155-0015-01			MICROCIRCUIT,DI:ML,ANALOG DATA SWITCH	80009	155-0015-01
A29W110	131-0566-00			BUS CONDUCTOR:DUMMY RES,2.375,22 AWG	55210	L-2007-1
A29W1401	131-0566-00			BUS CONDUCTOR:DUMMY RES,2.375,22 AWG	55210	L-2007-1
A29W1411	131-0566-00			BUS CONDUCTOR:DUMMY RES,2.375,22 AWG	55210	L-2007-1
A29W2632	131-0566-00			BUS CONDUCTOR:DUMMY RES,2.375,22 AWG	55210	L-2007-1
A29W2633	131-0566-00			BUS CONDUCTOR:DUMMY RES,2.375,22 AWG	55210	L-2007-1
A29W2800	131-0566-00			BUS CONDUCTOR:DUMMY RES,2.375,22 AWG	55210	L-2007-1

http://manoman.sqhill.com

Component No.	Tektronix Part No.	Serial/Model No. Eff	Dscont	Name & Description	Mfr Code	Mfr Part Number
A30	----- -----			CKT BOARD ASSY:G.P.I.B		
A30C100	281-0775-00			CAP.,FXD,CER DI:0.1UF,20%,50V	72982	8005D9AABZ5U104M
A30C140	281-0775-00			CAP.,FXD,CER DI:0.1UF,20%,50V	72982	8005D9AABZ5U104M
A30C210	281-0775-00			CAP.,FXD,CER DI:0.1UF,20%,50V	72982	8005D9AABZ5U104M
A30C320	281-0775-00			CAP.,FXD,CER DI:0.1UF,20%,50V	72982	8005D9AABZ5U104M
A30C340	281-0775-00			CAP.,FXD,CER DI:0.1UF,20%,50V	72982	8005D9AABZ5U104M
A30C440	281-0775-00			CAP.,FXD,CER DI:0.1UF,20%,50V	72982	8005D9AABZ5U104M
A30C510	281-0775-00			CAP.,FXD,CER DI:0.1UF,20%,50V	72982	8005D9AABZ5U104M
A30C520	283-0788-00			CAP.,FXD,MICA D:267PF,1%,500V	09023	CD15F0(267)F03
A30C610	281-0775-00			CAP.,FXD,CER DI:0.1UF,20%,50V	72982	8005D9AABZ5U104M
A30C640	281-0775-00			CAP.,FXD,CER DI:0.1UF,20%,50V	72982	8005D9AABZ5U104M
A30Q700	151-0190-05			TRANSISTOR:SILICON,NPN	80009	151-0190-05
A30Q701	151-0190-05			TRANSISTOR:SILICON,NPN	80009	151-0190-05
A30R201	315-0223-00			RES.,FXD,CMPSN:22K OHM,5%,0.25W	01121	CB2235
A30R202	315-0223-00			RES.,FXD,CMPSN:22K OHM,5%,0.25W	01121	CB2235
A30R203	315-0223-00			RES.,FXD,CMPSN:22K OHM,5%,0.25W	01121	CB2235
A30R204	315-0223-00			RES.,FXD,CMPSN:22K OHM,5%,0.25W	01121	CB2235
A30R205	315-0223-00			RES.,FXD,CMPSN:22K OHM,5%,0.25W	01121	CB2235
A30R210	315-0223-00			RES.,FXD,CMPSN:22K OHM,5%,0.25W	01121	CB2235
A30R301	315-0223-00			RES.,FXD,CMPSN:22K OHM,5%,0.25W	01121	CB2235
A30R302	315-0223-00			RES.,FXD,CMPSN:22K OHM,5%,0.25W	01121	CB2235
A30R303	315-0223-00			RES.,FXD,CMPSN:22K OHM,5%,0.25W	01121	CB2235
A30R340	315-0223-00			RES.,FXD,CMPSN:22K OHM,5%,0.25W	01121	CB2235
A30R520	315-0561-00			RES.,FXD,CMPSN:560 OHM,5%,0.25W	01121	CB5615
A30R700	315-0512-00			RES.,FXD,CMPSN:5.1K OHM,5%,0.25W	01121	CB5125
A30R701	315-0512-00			RES.,FXD,CMPSN:5.1K OHM,5%,0.25W	01121	CB5125
A30U110	156-1133-02			MICROCIRCUIT,DI:QUAD 3 STATE XCVR	80009	156-1133-02
A30U120	156-1133-02			MICROCIRCUIT,DI:QUAD 3 STATE XCVR	80009	156-1133-02
A30U130	156-1133-02			MICROCIRCUIT,DI:QUAD 3 STATE XCVR	80009	156-1133-02
A30U220	156-1246-00			MICROCIRCUIT,DI:GPIB PROTOCOL	80009	156-1246-00
A30U310	156-1133-02			MICROCIRCUIT,DI:QUAD 3 STATE XCVR	80009	156-1133-02
A30U330	156-0916-02			MICROCIRCUIT,DI:8-2 INP 3-STATE BFR,BURN	27014	DM81LS97
A30U410	156-0916-02			MICROCIRCUIT,DI:8-2 INP 3-STATE BFR,BURN	27014	DM81LS97
A30U430	156-0916-02			MICROCIRCUIT,DI:8-2 INP 3-STATE BFR,BURN	27014	DM81LS97
A30U510	156-0382-02			MICROCIRCUIT,DI:QUAD 2-INP NAND GATE	01295	SN74LS00
A30U520	156-0651-02			MICROCIRCUIT,DI:8 BIT PRL-OUTSER SHF RGTR	01295	SN74LS164
A30U530	156-0479-02			MICROCIRCUIT,DI:QUAD 2-INP ORGATE	01295	SN74LS32NP3
A30U610	156-0388-03			MICROCIRCUIT,DI:DUAL D FLIP-FLOP	07263	74LS74A
A30U620	156-0387-02			MICROCIRCUIT,DI:DUAL J-K FF,BURN IN	80009	156-0387-02
A30U630	156-0385-02			MICROCIRCUIT,DI:HEX INVERTER	01295	SN74LS04

http://manoman.sqhill.com

Component No.	Tektronix Part No.	Serial/Model No. Eff	Dscont	Name & Description	Mfr Code	Mfr Part Number
A31	----- -----			CKT BOARD ASSY:ROM		
A31C105	281-0775-00			CAP.,FXD,CER DI:0.1UF,20%,50V	72982	8005D9AABZ5U104M
A31C110	281-0775-00			CAP.,FXD,CER DI:0.1UF,20%,50V	72982	8005D9AABZ5U104M
A31C115	281-0775-00			CAP.,FXD,CER DI:0.1UF,20%,50V	72982	8005D9AABZ5U104M
A31C120	281-0775-00			CAP.,FXD,CER DI:0.1UF,20%,50V	72982	8005D9AABZ5U104M
A31C205	281-0775-00			CAP.,FXD,CER DI:0.1UF,20%,50V	72982	8005D9AABZ5U104M
A31C210	281-0775-00			CAP.,FXD,CER DI:0.1UF,20%,50V	72982	8005D9AABZ5U104M
A31C215	281-0775-00			CAP.,FXD,CER DI:0.1UF,20%,50V	72982	8005D9AABZ5U104M
A31C220	281-0775-00			CAP.,FXD,CER DI:0.1UF,20%,50V	72982	8005D9AABZ5U104M
A31C222	283-0103-00			CAP.,FXD,CER DI:180PF,5%,500V	59660	831-518-Z5D0181J
A31C305	281-0775-00			CAP.,FXD,CER DI:0.1UF,20%,50V	72982	8005D9AABZ5U104M
A31C310	281-0775-00			CAP.,FXD,CER DI:0.1UF,20%,50V	72982	8005D9AABZ5U104M
A31C405	281-0775-00			CAP.,FXD,CER DI:0.1UF,20%,50V	72982	8005D9AABZ5U104M
A31C410	281-0775-00			CAP.,FXD,CER DI:0.1UF,20%,50V	72982	8005D9AABZ5U104M
A31C415	281-0775-00			CAP.,FXD,CER DI:0.1UF,20%,50V	72982	8005D9AABZ5U104M
A31C420	281-0775-00			CAP.,FXD,CER DI:0.1UF,20%,50V	72982	8005D9AABZ5U104M
A31C425	281-0775-00			CAP.,FXD,CER DI:0.1UF,20%,50V	72982	8005D9AABZ5U104M
A31R210	315-0152-00			RES.,FXD,CMPSN:1.5K OHM,5%,0.25W	01121	CB1525
A31R220	315-0222-00			RES.,FXD,CMPSN:2.2K OHM,5%,0.25W	01121	CB2225
A31R222	315-0201-00			RES.,FXD,CMPSN:200 OHM,5%,0.25W	01121	CB2015
A31U100	160-0408-00			MICROCIRCUIT,DI:8192 X 8 ROM		
A31U110	160-0409-00			MICROCIRCUIT,DI:8192 X 8 ROM		
A31U120	160-0445-00			MICROCIRCUIT,DI:FPLA W/3 STATE OUT	80009	160-0445-00
A31U130	156-0916-02			MICROCIRCUIT,DI:8-2 INP 3-STATE BFR,BURN	27014	DM81LS97
A31U200	160-0410-00			MICROCIRCUIT,DI:8192 X 8 ROM	80009	160-0410-00
A31U210	160-0411-00			MICROCIRCUIT,DI:8192 X 8 ROM	80009	160-0411-00
A31U220	156-0171-00			MICROCIRCUIT,DI:QUAD 2-INPUT OR GATE	80009	156-0171-00
A31U225	156-0382-02			MICROCIRCUIT,DI:QUAD 2-INP NAND GATE	01295	SN74LS00
A31U227	156-0387-02			MICROCIRCUIT,DI:DUAL J-K FF,BURN IN	80009	156-0387-02
A31U230	156-0916-02			MICROCIRCUIT,DI:8-2 INP 3-STATE BFR,BURN	27014	DM81LS97
A31U320	156-0690-03			MICROCIRCUIT,DI:QUAD 2 INP NOR GATE,BURN IN	01295	SN74S02
A31U325	156-0718-03			MICROCIRCUIT,DI:TRIPLE 3-INP NOR GATE	01295	SN74LS27
A31U330	156-0916-02			MICROCIRCUIT,DI:8-2 INP 3-STATE BFR,BURN	27014	DM81LS97
A31U400	160-0466-00			MICROCIRCUIT,DI:2048 X 8 E PROM	80009	160-0466-00
A31U410	160-0467-00			MICROCIRCUIT,DI:2048 X 8 E PROM	80009	160-0467-00
A31U420	156-0180-04			MICROCIRCUIT,DI:QUAD 2 INP NAND GATE	01295	SN74S00NP3
A31U425	156-0385-02			MICROCIRCUIT,DI:HEX INVERTER	01295	SN74LS04
A31U430	156-0916-02			MICROCIRCUIT,DI:8-2 INP 3-STATE BFR,BURN	27014	DM81LS97
A31XU300	----- -----			(FOR FUTURE EXPANSION)		
A31XU310	----- -----			(FOR FUTURE EXPANSION)		

http://manoman.sqhill.com

Component No.	Tektronix Part No.	Serial/Model No. Eff	Dscont	Name & Description	Mfr Code	Mfr Part Number
A32	----- -----			CKT BOARD ASSY:REAR PANEL		
A32C14	281-0775-00			CAP.,FXD,CER DI:0.1UF,20%,50V	72982	8005D9AABZ5U104M
A32CR12	152-0198-00			SEMICOND DEVICE:SILICON,200V,3A	03508	1N5624
A32CR15	152-0581-00			SEMICOND DEVICE:SILICON,20V,1A	80009	152-0581-00
A32F12	159-0016-00			FUSE,CARTRIDGE:3AG,1.5A,250V,FAST-BLOW	71400	AGC 1 1/2
A32Q14	151-0521-00			TRANSISTOR:200V,8.0A	03508	C122B
A32R12	308-0244-00			RES.,FXD,WW:0.3 OHM,10%,2W	91637	RS2B162ER3000K
A32R13	315-0221-00			RES.,FXD,CMPSN:220 OHM,5%,0.25W	01121	CB2215
A32R14	315-0102-00			RES.,FXD,CMPSN:1K OHM,5%,0.25W	01121	CB1025
A32R15	315-0331-00			RES.,FXD,CMPSN:330 OHM,5%,0.25W	01121	CB3315
A32S110	260-1721-00			SWITCH,ROCKER:8,SPST,125MA,30VDC	00779	435166-5
A32VR13	152-0243-00			SEMICOND DEVICE:ZENER,0.4W,15V,5%	14552	TD3810983
A32VR16	152-0195-00			SEMICOND DEVICE:ZENER,0.4W,5.1V,5%	04713	SZ11755
A33	----- -----			CKT BOARD ASSY:X-Y COMPENSATION		
A33C822	283-0603-00			CAP.,FXD,MICA D:113PF,2%,300V	00853	D153F1130G0
A33C825	283-0668-00			CAP.,FXD,MICA D:184PF,1%,500V	00853	D155F1840F0
A33C827	283-0677-00			CAP.,FXD,MICA D:82PF,1%,500V	00853	D155E820F0
A33C832	281-0118-00			CAP.,VAR,MICA D:8-90PF,175V	52769	GSM231
A33C835	283-0668-00			CAP.,FXD,MICA D:184PF,1%,500V	00853	D155F1840F0
A33C837	283-0677-00			CAP.,FXD,MICA D:82PF,1%,500V	00853	D155E820F0
A33CR820	152-0141-02			SEMICOND DEVICE:SILICON,30V,150MA	01295	1N4152R
A33K822	148-0034-00			RELAY,ARMATURE:DPDT,15VDC,600 OHM	80009	148-0034-00
A33K838	148-0034-00			RELAY,ARMATURE:DPDT,15VDC,600 OHM	80009	148-0034-00
A33L822	108-0719-00			COIL,RF:805NH	80009	108-0719-00
A33L825	108-0719-00			COIL,RF:805NH	80009	108-0719-00
A33L827	108-0718-00			COIL,RF:1.75UH	80009	108-0718-00
A33L832	108-0719-00			COIL,RF:805NH	80009	108-0719-00
A33L835	108-0719-00			COIL,RF:805NH	80009	108-0719-00
A33R822	321-0068-00			RES.,FXD,FILM:49.9 OHM,1%,0.125W	91637	MFF1816G49R90F
A33R832	321-0068-00			RES.,FXD,FILM:49.9 OHM,1%,0.125W	91637	MFF1816G49R90F

http://manoman.sqhill.com

Component No.	Tektronix Part No.	Serial/Model No. Eff	Dscont	Name & Description	Mfr Code	Mfr Part Number
A36	----- -----			CKT BOARD ASSY:ELECTRONICS		
A36C210	281-0775-00			CAP.,FXD,CER DI:0.1UF,20%,50V	72982	8005D9AABZ5U104M
A36C330	281-0775-00			CAP.,FXD,CER DI:0.1UF,20%,50V	72982	8005D9AABZ5U104M
A36C410	281-0775-00			CAP.,FXD,CER DI:0.1UF,20%,50V	72982	8005D9AABZ5U104M
A36R110	315-0221-00			RES.,FXD,CMPSN:220 OHM,5%,0.25W	01121	CB2215
A36R210	315-0221-00			RES.,FXD,CMPSN:220 OHM,5%,0.25W	01121	CB2215
A36R430	315-0223-00			RES.,FXD,CMPSN:22K OHM,5%,0.25W	01121	CB2235
A36R530	315-0223-00			RES.,FXD,CMPSN:22K OHM,5%,0.25W	01121	CB2235
A36R531	315-0223-00			RES.,FXD,CMPSN:22K OHM,5%,0.25W	01121	CB2235
A36R532	315-0223-00			RES.,FXD,CMPSN:22K OHM,5%,0.25W	01121	CB2235
A36R541	315-0223-00			RES.,FXD,CMPSN:22K OHM,5%,0.25W	01121	CB2235
A36R542	315-0223-00			RES.,FXD,CMPSN:22K OHM,5%,0.25W	01121	CB2235
A36R543	315-0223-00			RES.,FXD,CMPSN:22K OHM,5%,0.25W	01121	CB2235
A36R544	315-0223-00			RES.,FXD,CMPSN:22K OHM,5%,0.25W	01121	CB2235
A36R545	315-0223-00			RES.,FXD,CMPSN:22K OHM,5%,0.25W	01121	CB2235
A36R630	315-0223-00			RES.,FXD,CMPSN:22K OHM,5%,0.25W	01121	CB2235
A36R631	315-0223-00			RES.,FXD,CMPSN:22K OHM,5%,0.25W	01121	CB2235
A36R632	315-0223-00			RES.,FXD,CMPSN:22K OHM,5%,0.25W	01121	CB2235
A36R641	315-0223-00			RES.,FXD,CMPSN:22K OHM,5%,0.25W	01121	CB2235
A36R642	315-0223-00			RES.,FXD,CMPSN:22K OHM,5%,0.25W	01121	CB2235
A36R643	315-0223-00			RES.,FXD,CMPSN:22K OHM,5%,0.25W	01121	CB2235
A36R644	315-0223-00			RES.,FXD,CMPSN:22K OHM,5%,0.25W	01121	CB2235
A36R645	315-0223-00			RES.,FXD,CMPSN:22K OHM,5%,0.25W	01121	CB2235
A36U320	156-0469-00			MICROCIRCUIT,DI:3-LINE TO 8-LINE DECODER	01295	SN74LS138N
A36U520	156-0470-02			MICROCIRCUIT,DI:8 INP DATA SEL W/3 STATE	01295	SN74LS251
A36U620	156-0470-02			MICROCIRCUIT,DI:8 INP DATA SEL W/3 STATE	01295	SN74LS251

http://manoman.sqhill.com

Component No.	Tektronix Part No.	Serial/Model No. Eff	Dscont	Name & Description	Mfr Code	Mfr Part Number
A37	----- -----			CKT BOARD ASSY:BUTTON		
A37DS820	150-1036-00			LAMP,LED:RED,3.0V,40MA	01295	TIL 209A
A37DS1000	150-1036-00			LAMP,LED:RED,3.0V,40MA	01295	TIL 209A
A37S110	131-2202-00			CONTACT,ELEC:BERYLLIUM COPPER	52961	ENG#8000
A37S210	131-2202-00			CONTACT,ELEC:BERYLLIUM COPPER	52961	ENG#8000
A37S220	131-2202-00			CONTACT,ELEC:BERYLLIUM COPPER	52961	ENG#8000
A37S230	131-2202-00			CONTACT,ELEC:BERYLLIUM COPPER	52961	ENG#8000
A37S240	131-2202-00			CONTACT,ELEC:BERYLLIUM COPPER	52961	ENG#8000
A37S250	131-2202-00			CONTACT,ELEC:BERYLLIUM COPPER	52961	ENG#8000
A37S260	131-2202-00			CONTACT,ELEC:BERYLLIUM COPPER	52961	ENG#8000
A37S270	131-2202-00			CONTACT,ELEC:BERYLLIUM COPPER	52961	ENG#8000
S37S300	131-2202-00			CONTACT,ELEC:BERYLLIUM COPPER	52961	ENG#8000
S37S310	131-2202-00			CONTACT,ELEC:BERYLLIUM COPPER	52961	ENG#8000
S37S320	131-2202-00			CONTACT,ELEC:BERYLLIUM COPPER	52961	ENG#8000
S37S330	131-2202-00			CONTACT,ELEC:BERYLLIUM COPPER	52961	ENG#8000
A37S350	131-2202-00			CONTACT,ELEC:BERYLLIUM COPPER	52961	ENG#8000
A37S360	131-2202-00			CONTACT,ELEC:BERYLLIUM COPPER	52961	ENG#8000
A37S370	131-2202-00			CONTACT,ELEC:BERYLLIUM COPPER	52961	ENG#8000
A37S410	131-2202-00			CONTACT,ELEC:BERYLLIUM COPPER	52961	ENG#8000
A37S420	131-2202-00			CONTACT,ELEC:BERYLLIUM COPPER	52961	ENG#8000
A37S430	131-2202-00			CONTACT,ELEC:BERYLLIUM COPPER	52961	ENG#8000
A37S450	131-2202-00			CONTACT,ELEC:BERYLLIUM COPPER	52961	ENG#8000
A37S460	131-2202-00			CONTACT,ELEC:BERYLLIUM COPPER	52961	ENG#8000
A37S470	131-2202-00			CONTACT,ELEC:BERYLLIUM COPPER	52961	ENG#8000
A37S510	131-2202-00			CONTACT,ELEC:BERYLLIUM COPPER	52961	ENG#8000
A37S520	131-2202-00			CONTACT,ELEC:BERYLLIUM COPPER	52961	ENG#8000
A37S530	131-2202-00			CONTACT,ELEC:BERYLLIUM COPPER	52961	ENG#8000
A37S550	131-2202-00			CONTACT,ELEC:BERYLLIUM COPPER	52961	ENG#8000
A37S560	131-2202-00			CONTACT,ELEC:BERYLLIUM COPPER	52961	ENG#8000
A37S570	131-2202-00			CONTACT,ELEC:BERYLLIUM COPPER	52961	ENG#8000
A37S610	131-2202-00			CONTACT,ELEC:BERYLLIUM COPPER	52961	ENG#8000
A37S620	131-2202-00			CONTACT,ELEC:BERYLLIUM COPPER	52961	ENG#8000
A37S630	131-2202-00			CONTACT,ELEC:BERYLLIUM COPPER	52961	ENG#8000
A37S650	131-2202-00			CONTACT,ELEC:BERYLLIUM COPPER	52961	ENG#8000
A37S660	131-2202-00			CONTACT,ELEC:BERYLLIUM COPPER	52961	ENG#8000
A37S670	131-2202-00			CONTACT,ELEC:BERYLLIUM COPPER	52961	ENG#8000
A37S710	131-2202-00			CONTACT,ELEC:BERYLLIUM COPPER	52961	ENG#8000
A37S720	131-2202-00			CONTACT,ELEC:BERYLLIUM COPPER	52961	ENG#8000
A37S730	131-2202-00			CONTACT,ELEC:BERYLLIUM COPPER	52961	ENG#8000
A37S750	131-2202-00			CONTACT,ELEC:BERYLLIUM COPPER	52961	ENG#8000
A37S760	131-2202-00			CONTACT,ELEC:BERYLLIUM COPPER	52961	ENG#8000
A37S770	131-2202-00			CONTACT,ELEC:BERYLLIUM COPPER	52961	ENG#8000
A37S810	131-2202-00			CONTACT,ELEC:BERYLLIUM COPPER	52961	ENG#8000
A37S820	131-2202-00			CONTACT,ELEC:BERYLLIUM COPPER	52961	ENG#8000
A37S830	131-2202-00			CONTACT,ELEC:BERYLLIUM COPPER	52961	ENG#8000
A37S850	131-2202-00			CONTACT,ELEC:BERYLLIUM COPPER	52961	ENG#8000
A37S860	131-2202-00			CONTACT,ELEC:BERYLLIUM COPPER	52961	ENG#8000
A37S870	131-2202-00			CONTACT,ELEC:BERYLLIUM COPPER	52961	ENG#8000
A37S910	131-2202-00			CONTACT,ELEC:BERYLLIUM COPPER	52961	ENG#8000
A37S920	131-2202-00			CONTACT,ELEC:BERYLLIUM COPPER	52961	ENG#8000
A37S930	131-2202-00			CONTACT,ELEC:BERYLLIUM COPPER	52961	ENG#8000
A37S950	131-2202-00			CONTACT,ELEC:BERYLLIUM COPPER	52961	ENG#8000
A37S960	131-2202-00			CONTACT,ELEC:BERYLLIUM COPPER	52961	ENG#8000
A37S970	131-2202-00			CONTACT,ELEC:BERYLLIUM COPPER	52961	ENG#8000
A37S1010	131-2202-00			CONTACT,ELEC:BERYLLIUM COPPER	52961	ENG#8000
A37S1020	131-2202-00			CONTACT,ELEC:BERYLLIUM COPPER	52961	ENG#8000

http://manoman.sghill.com

Component No.	Tektronix Part No.	Serial/Model No. Eff	Dscont	Name & Description	Mfr Code	Mfr Part Number
A37S1030	131-2202-00			CONTACT,ELEC:BERYLLIUM COPPER	52961	ENG#8000
A37S1050	131-2202-00			CONTACT,ELEC:BERYLLIUM COPPER	52961	ENG#8000
A37S1060	131-2202-00			CONTACT,ELEC:BERYLLIUM COPPER	52961	ENG#8000
A37S1070	131-2202-00			CONTACT,ELEC:BERYLLIUM COPPER	52961	ENG#8000
A37S1110	131-2202-00			CONTACT,ELEC:BERYLLIUM COPPER	52961	ENG#8000
A37S1120	131-2202-00			CONTACT,ELEC:BERYLLIUM COPPER	52961	ENG#8000
A37S1130	131-2202-00			CONTACT,ELEC:BERYLLIUM COPPER	52961	ENG#8000
A37S1150	131-2202-00			CONTACT,ELEC:BERYLLIUM COPPER	52961	ENG#8000
A37S1160	131-2202-00			CONTACT,ELEC:BERYLLIUM COPPER	52961	ENG#8000
A37S1210	131-2202-00			CONTACT,ELEC:BERYLLIUM COPPER	52961	ENG#8000
A37S1240	131-2202-00			CONTACT,ELEC:BERYLLIUM COPPER	52961	ENG#8000
A37S1250	131-2202-00			CONTACT,ELEC:BERYLLIUM COPPER	52961	ENG#8000
A37S1260	131-2202-00			CONTACT,ELEC:BERYLLIUM COPPER	52961	ENG#8000
A37S1270	131-2202-00			CONTACT,ELEC:BERYLLIUM COPPER	52961	ENG#8000
A37S1310	131-2202-00			CONTACT,ELEC:BERYLLIUM COPPER	52961	ENG#8000
A37S1330	131-2202-00			CONTACT,ELEC:BERYLLIUM COPPER	52961	ENG#8000
A37S1340	131-2202-00			CONTACT,ELEC:BERYLLIUM COPPER	52961	ENG#8000
A37S1350	131-2202-00			CONTACT,ELEC:BERYLLIUM COPPER	52961	ENG#8000
A37S1360	131-2202-00			CONTACT,ELEC:BERYLLIUM COPPER	52961	ENG#8000
A37S1370	131-2202-00			CONTACT,ELEC:BERYLLIUM COPPER	52961	ENG#8000
A37S1400	131-2202-00			CONTACT,ELEC:BERYLLIUM COPPER	52961	ENG#8000
A37S1410	131-2202-00			CONTACT,ELEC:BERYLLIUM COPPER	52961	ENG#8000
A37S1430	131-2202-00			CONTACT,ELEC:BERYLLIUM COPPER	52961	ENG#8000
A37S1440	131-2202-00			CONTACT,ELEC:BERYLLIUM COPPER	52961	ENG#8000
A37S1450	131-2202-00			CONTACT,ELEC:BERYLLIUM COPPER	52961	ENG#8000
A37S1460	131-2202-00			CONTACT,ELEC:BERYLLIUM COPPER	52961	ENG#8000
A37S1470	131-2202-00			CONTACT,ELEC:BERYLLIUM COPPER	52961	ENG#8000

http://manoman.sqhill.com

Component No.	Tektronix Part No.	Serial/Model No. Eff	Dscont	Name & Description	Mfr Code	Mfr Part Number
				CHASSIS PARTS		
C16	290-0628-00			CAP.,FXD,ELCTLT:950UF,+50-10%,200V	56289	36D7560
C17	290-0628-00			CAP.,FXD,ELCTLT:950UF,+50-10%,200V	56289	36D7560
C37	285-0938-00			CAP.,FXD,PLSTC:0.03UF,5%,600V	56289	AF8B1G303J004
C83	283-0001-00			CAP.,FXD,CER DI:0.005UF,+100-0%,500V	72982	831-559E502P
DL5	119-1048-00			CKT BOARD ASSY:DELAY LINE	80009	119-1048-00
DS4	150-0048-01			LAMP,INCAND:5V,0.06A,SEL	08806	683AS15
DS5	150-0048-01			LAMP,INCAND:5V,0.06A,SEL	08806	683AS15
DS15	150-1061-00			LT EMITTING DIO:RED,660NM,50MA MAX	27014	SJ62775
DS114	150-0048-01			LAMP,INCAND:5V,0.06A,SEL	08806	683AS15
DS120	150-0048-01			LAMP,INCAND:5V,0.06A,SEL	08806	683AS15
DS121	150-0048-01			LAMP,INCAND:5V,0.06A,SEL	08806	683AS15
F10	159-0017-00			FUSE,CARTRIDGE:3AG,4A,250V,FAST BLOW	71400	MTH4
FL10	119-0420-00			FILTER,RFI:6A,250VAC,400HZ	02777	F-11935-6
L21	108-0544-00			COIL,TUBE DEFLE:TRACE ROTATOR	80009	108-0544-00
L22	108-0605-00			COIL,TUBE DEFLE:Y AXIS ALIGNMENT	80009	108-0605-00
L37	108-0761-00			COIL,RF:1MH	80009	108-0761-00
L81	108-0685-00			COIL,RF:80NH	80009	108-0685-00
L82	108-0685-00			COIL,RF:80NH	80009	108-0685-00
Q28	151-0656-00			TRANSISTOR:SILICON,NPN	04713	SJE1972
Q34	151-0632-00			TRANSISTOR:SILICON,NPN	04713	SJE1946
Q40	151-0632-00			TRANSISTOR:SILICON,NPN	04713	SJE1946
Q58	151-0657-00			TRANSISTOR:SILICON,PNP	04713	SJE1973
Q74	151-0656-00			TRANSISTOR:SILICON,NPN	04713	SJE1972
Q94	151-0657-00			TRANSISTOR:SILICON,PNP	04713	SJE1973
Q122	151-0349-00			TRANSISTOR:SILICON,NPN,SEL FROM MJE2801	04713	SJE924
Q126	151-0477-00			TRANSISTOR:SILICON,NPN	04713	SJE374
R55	311-1375-00			RES.,VAR,NONWIR:PNL,10K OHM,1W	01121	73M1G040L103M
R83	307-0292-15			RES.,FXD,FILM:182 OHM W/PEAKING COIL	80009	307-0292-15
S10	260-1709-00			SWITCH,PUSH:POWER	77342	A9M1-762-6-3
S12	260-1300-00			SWITCH,SLIDE:DPDT,3A,125VAC	82389	46206LFE
S15	260-0247-00			SWITCH,PUSH:SPST,1A,115VAC	81073	30YY1009
S16	260-1812-00			SWITCH,SLIDE:DPDT,0.5A,125VAC/VDC	82389	11P-1076
S72	260-0677-00			SWITCH,THRMSTC:NC,OPEN 70,CL53.5,10A,240V	73803	20700LA506-2054
S99	260-0450-00			SWITCH,SLIDE:3 POS,DOUBLE POLE	82389	11D-1007
T110	120-1183-00			XFMR,PWR,STPDN:HIGH FREQUENCY	80009	120-1183-00
V21	154-0644-09			ELECTRON TUBE:CRT,P11,INT SCALE	80009	154-0644-09
	----- -----			(OPTION 78 ONLY)		
V21	154-0644-05			ELECTRON TUBE:CRT,P31 PHOSPHOR	80009	154-0644-05

http://manoman.sqhill.com

DIAGRAMS AND CIRCUIT BOARD ILLUSTRATIONS

Symbols

Graphic symbols and class designation letters are based on ANSI Standard Y32.2-1975.

Logic symbology is based on ANSI Y32.14-1973 in terms of positive logic. Logic symbols depict the logic function performed and may differ from the manufacturer's data.

The overline on a signal name indicates that the signal performs its intended function when it is in the low state.

Abbreviations are based on ANSI Y1.1-1972.

Other ANSI standards that are used in the preparation of diagrams by Tektronix, Inc. are:

Y14.15, 1966	Drafting Practices.
Y14.2, 1973	Line Conventions and Lettering.
Y10.5, 1968	Letter Symbols for Quantities Used in Electrical Science and Electrical Engineering.

American National Standard Institute
1430 Broadway
New York, New York 10018

Component Values

Electrical components shown on the diagrams are in the following units unless noted otherwise:

Capacitors = Values one or greater are in picofarads (pF). Values less than one are in microfarads (μF).
Resistors = Ohms (Ω).

The information and special symbols below may appear in this manual.

Assembly Numbers and Grid Coordinates

Each assembly in the instrument is assigned an assembly number (e.g., A20). The assembly number appears on the circuit board outline on the diagram, in the title for the circuit board component location illustration, and in the lookup table for the schematic diagram and corresponding component locator illustration. The Replaceable Electrical Parts list is arranged by assemblies in numerical sequence; the components are listed by component number *(see following illustration for constructing a component number).

The schematic diagram and circuit board component location illustration have grids. A lookup table with the grid coordinates is provided for ease of locating the component. Only the components illustrated on the facing diagram are listed in the lookup table. When more than one schematic diagram is used to illustrate the circuitry on a circuit board, the circuit board illustration may only appear opposite the first diagram on which it was illustrated; the lookup table will list the diagram number of other diagrams that the circuitry of the circuit board appears on.

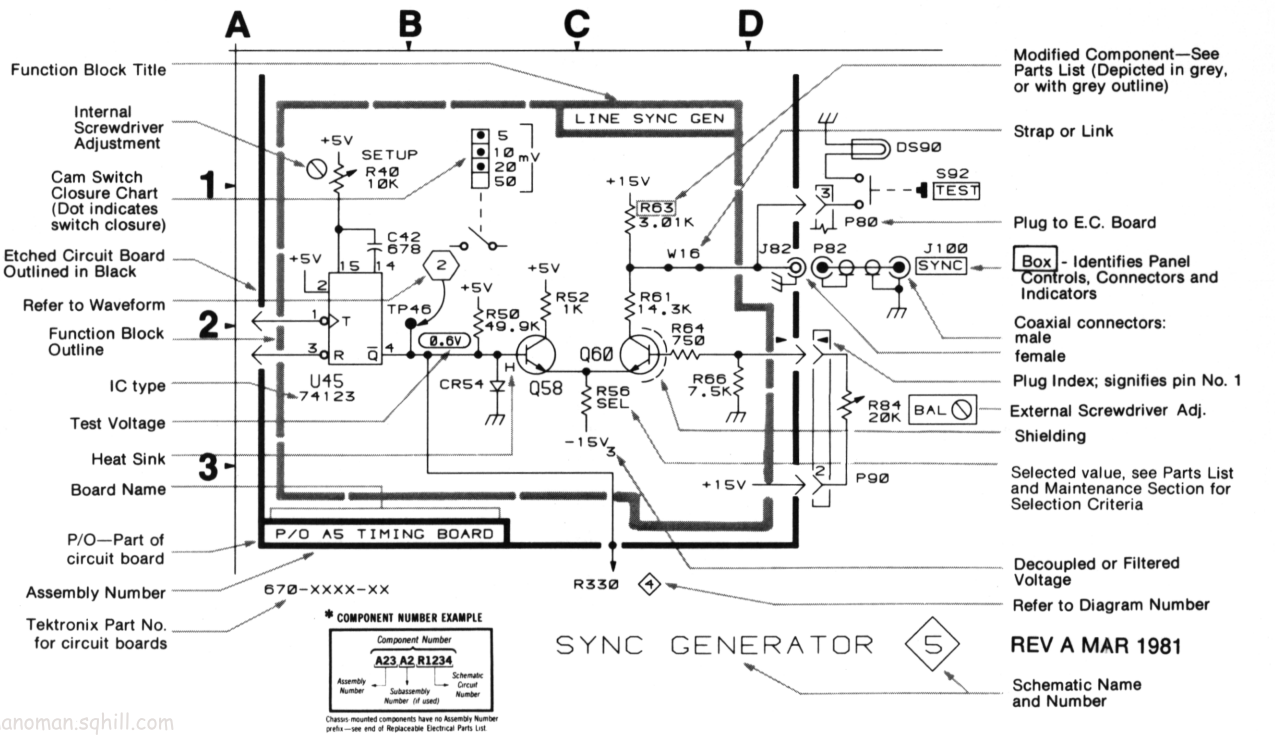

http://manoman.sghill.com

BOARD LOCATOR BY ASSEMBLY NUMBER

Assembly Number ○	Board Name	Board Location(Unit)	Schematic Location ◇
A1	Graticule Lights	Display	17
A2	Mode Switch	Acquisition	2
A3	Front Panel Keyboard Elect.	Display	18,36
A4	Front Panel Button	Display	18
A5	Intensity Control	Display	2,14,17
A6	Pot Adjust	Display	14,17
A7	Aux Regulator	Display	38
A8	Mother	Display	37
A9	Horizontal Channel Switch	Acquisition	10
A10	Horizontal Interconnect	Acquisition	10
A11	Main Interface	Acquisition	3,4,5,6,10
A12	Control Rectifier	Power Supply	15
A13	Trigger Amplifier	Acquisition	5,6
A14	Logic	Acquisition	4
A15	Signal Output	Acquisition	12
A16	Fan	Display	16
A17	Horizontal Amplifier	Display	11
A18	Vertical Amplifier	Display	9
A19	Vertical Channel Switch	Acquisition	7
A20	High Voltage	Display	14
A21	Z-Axis	Display	13,14
A22	Low Voltage Regulator	Power Supply	16
A23	Inverter	Power Supply	15
A24	Delay Line	Display	9
A25	Digitizer	Display	8,20,26
A26	Control Logic	Display	21,22,23,24,25
A27	MPU	Display	27,28,36
A28	RAM	Display	30
A29	Display	Display	31,32,33,34
A30	GPIB	Display	35
A31	ROM	Display	29
A32	Rear Panel Connector	Display	36
A33	X-Y Compensation	Acquisition	10
A34	Display Follower	Acquisition	3
A35	Display Follower	Acquisition	3
A36	Calculator Keyboard	Waveform Calculator	19,36
A37	Calculator Button	Waveform Calculator	19

BOARD LOCATOR BY BOARD NAME

Board Name	Assembly Number ○	Board Location(Unit)	Schematic Location ◇
Aux Regulator	A7	Display	38
Calculator Keyboard	A36	Waveform Calculator	19,36
Calculator Button	A37	Waveform Calculator	19
Control Logic	A26	Display	21,22,23,24,25
Control Rectifier	A12	Power Supply	15
Delay Line	A24	Display	9
Digitizer	A25	Display	8,20,26
Display Follower	A34	Acquisition	3
Display Follower	A35	Acquisition	3
Display	A29	Acquisition	31,32,33,34
Fan	A16	Display	16
Front Panel Keyboard Elect.	A3	Display	18,36
Front Panel Button	A4	Display	18
GPIB	A30	Display	35
Graticule Lights	A1	Display	17
High Voltage	A20	Display	14
Horizontal Channel Switch	A9	Acquisition	10
Horizontal Amplifier	A17	Display	11
Horizontal Interconnect	A10	Acquisition	10
Intensity Control	A5	Display	2,14,17
Inverter	A23	Power Supply	15
Logic	A14	Acquisition	4
Low Voltage Regulator	A22	Power Supply	16
MPU	A27	Display	27,28,36
Main Interface	A11	Acquisition	3,4,5,6,10
Mode Switch	A2	Acquisition	2
Mother	A8	Display	37
Pot Adjust	A6	Display	14,17
RAM	A28	Display	30
ROM	A31	Display	29
Rear Panel Connector	A32	Display	36
Signal Output	A15	Acquisition	12
Trigger Amplifier	A13	Acquisition	5,6
Vertical Amplifier	A18	Display	9
Vertical Channel Switch	A19	Acquisition	7
X-Y Compensation	A33	Acquisition	10
Z-Axis	A21	Display	13,14

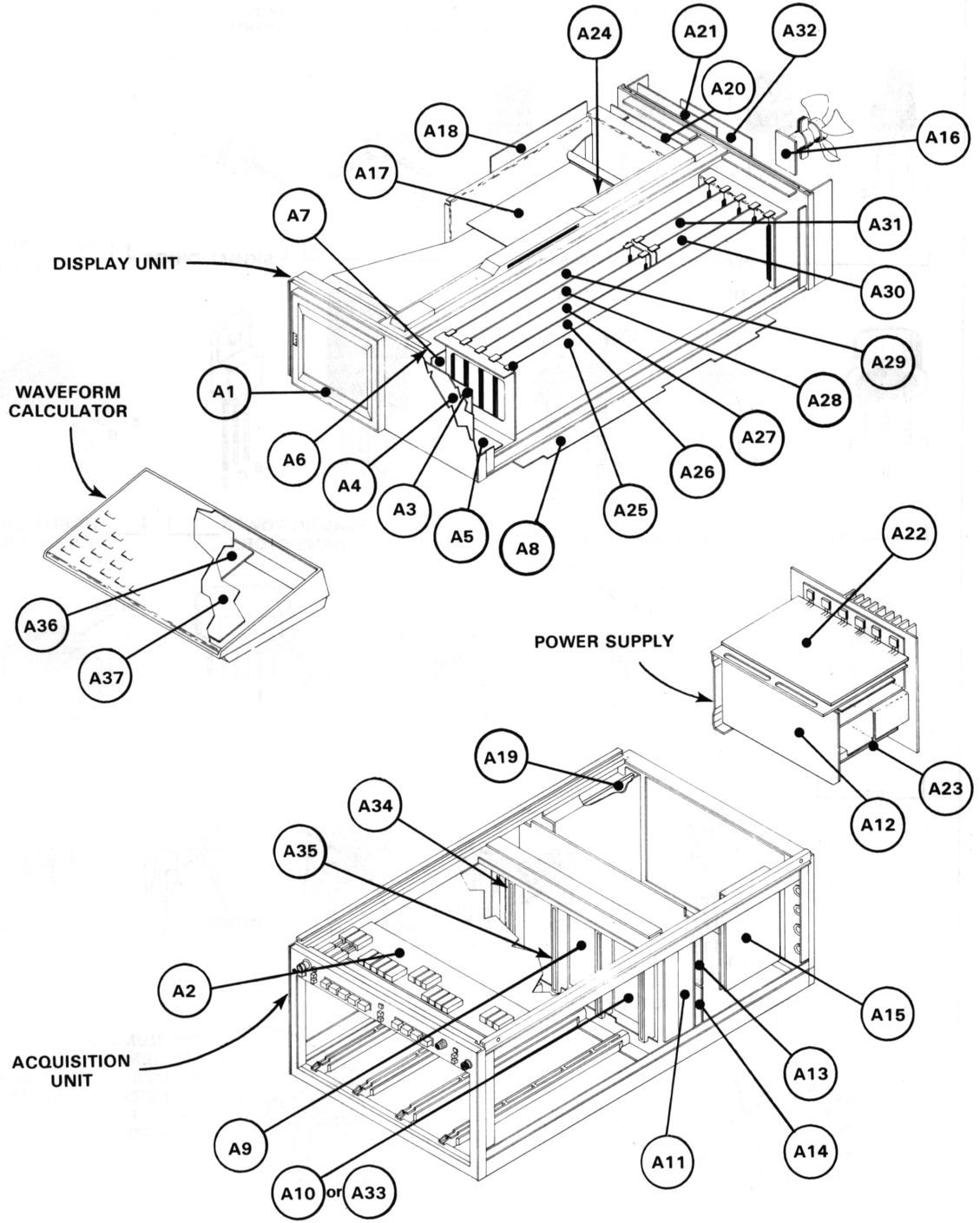

2874-299

Figure 7-1. 7854 Circuit Board Locations.

http://manuman.sqhill.com

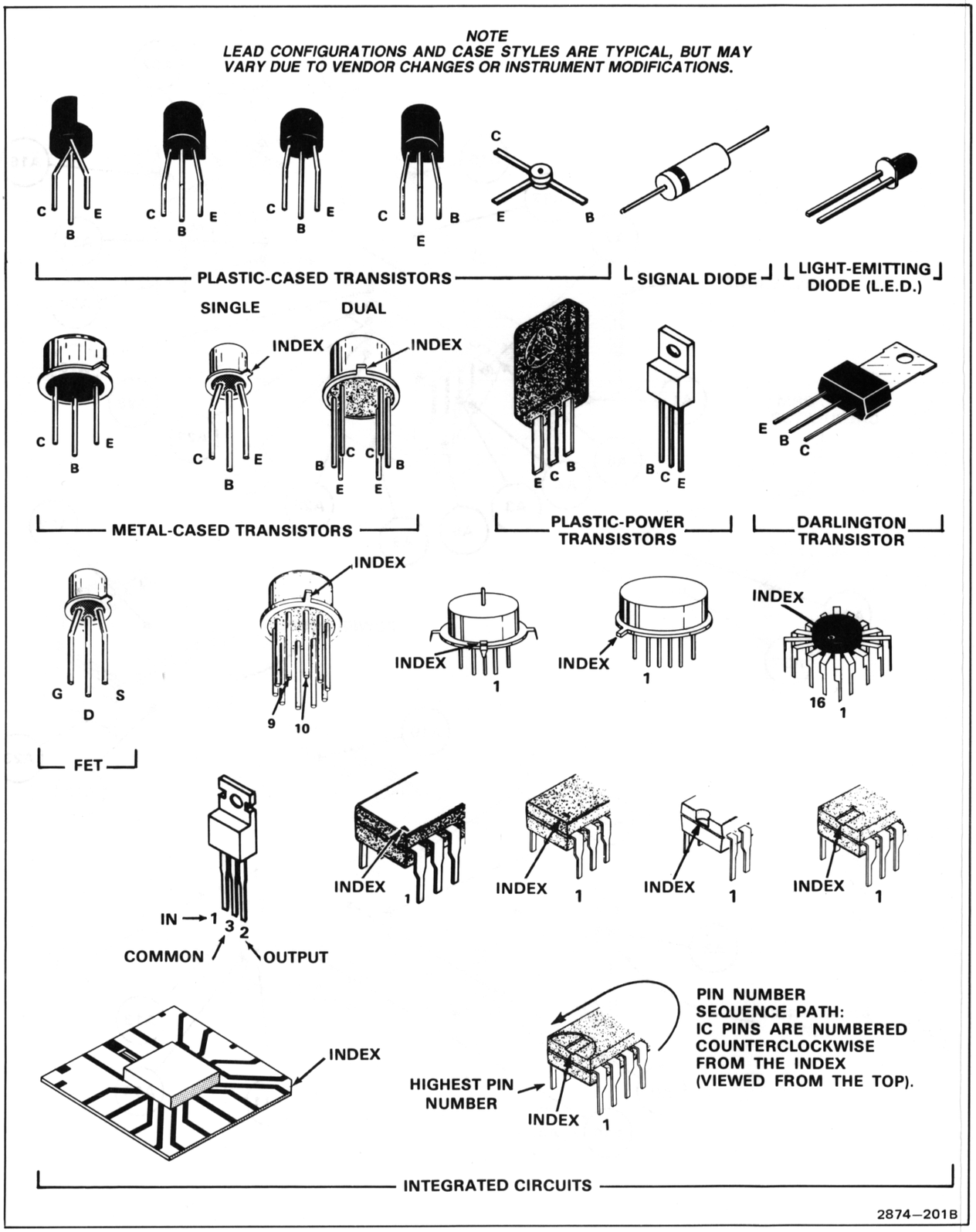

CHASSIS MOUNTED PARTS

CIRCUIT NUMBER	SCHEM NUMBER	SCHEM LOCATION	CIRCUIT NUMBER	SCHEM NUMBER	SCHEM LOCATION
C37	15	D1	L37	15	D1
C83	9	G3	L81	9	G1
			L82	9	G2
DL64	10	G3			
DL141	8	G2	P10	15	A4
			P11	15	A3
DS2	2	A1	P17	17	D1
DS4	2	A2	P57	17	F5
DS5	2	A2	P64	38	A3
DS42	17	E1	P65	13	F3
DS43	17	E1	P83	13	F2
DS44	17	E1	P83	15	F5
DS114	2	H4	P132	13	A1
DS120	2	H5	P207	9	E3
DS121	2	H5			
			R55	17	D1
E5	10	G1	R81	9	G1
E6	10	G1	R82	9	G2
			R83	9	G1
F10	15	A3			
FL10	15	A3	S10	15	A3
			S15	36	A3
J1	2	A1	S16	36	A4
J13	36	A3	S72	15	E4
J14	36	A3			
J15	36	A3	T110	15	E2
L21	14	E1			
L22	14	E1			

Figure 7-2. Semiconductor Lead Configurations.

http://manoman.sqhill.com

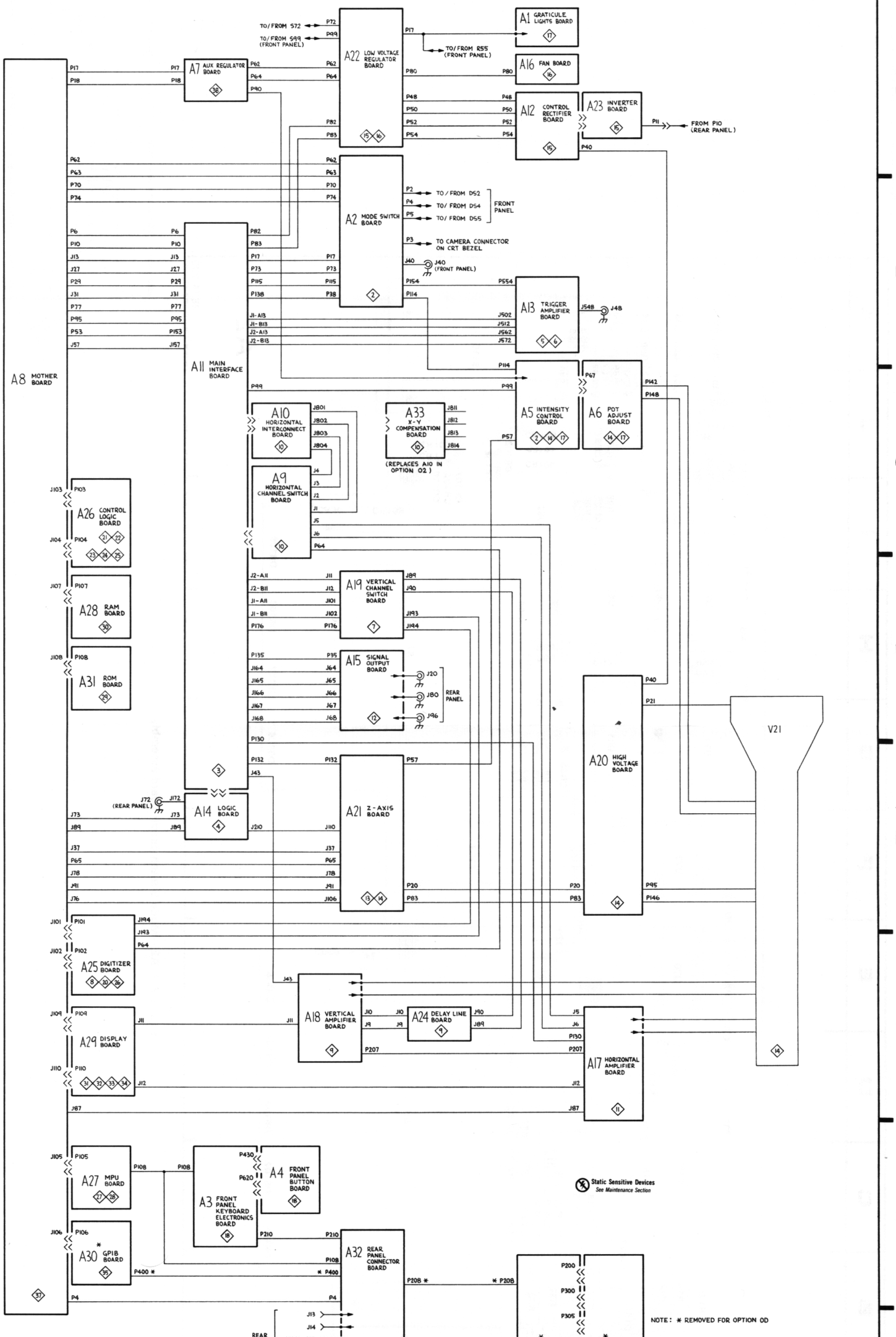

CABLE DISTRIBUTION

2874-235
REV A MAR 1981

http://manoma7854.ill.com

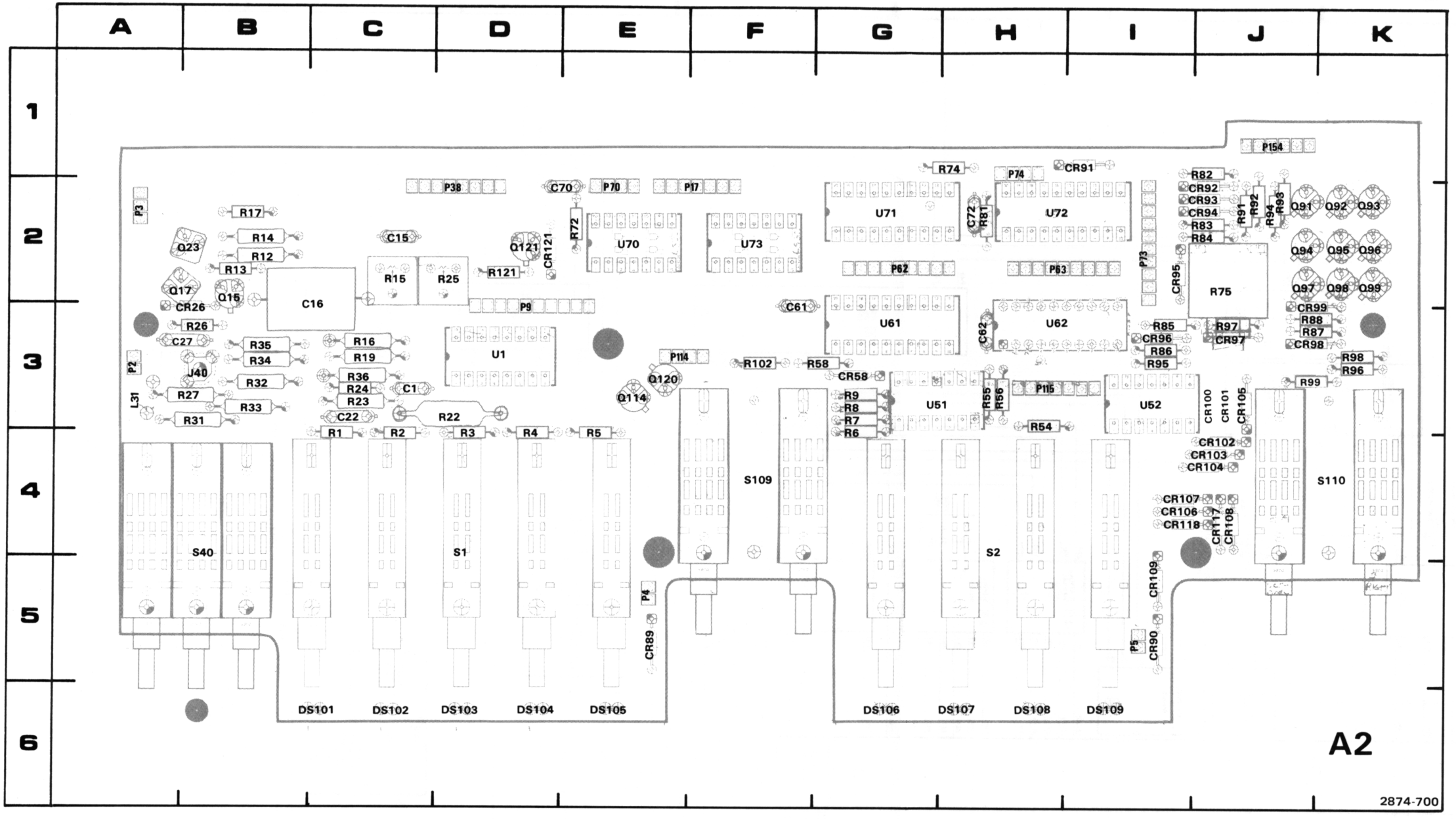

Figure 7-3. A2—Mode Switch circuit board assembly.

http://manoman.sqhill.com

MODE SWITCH AND CALIBRATOR DIAGRAM 2

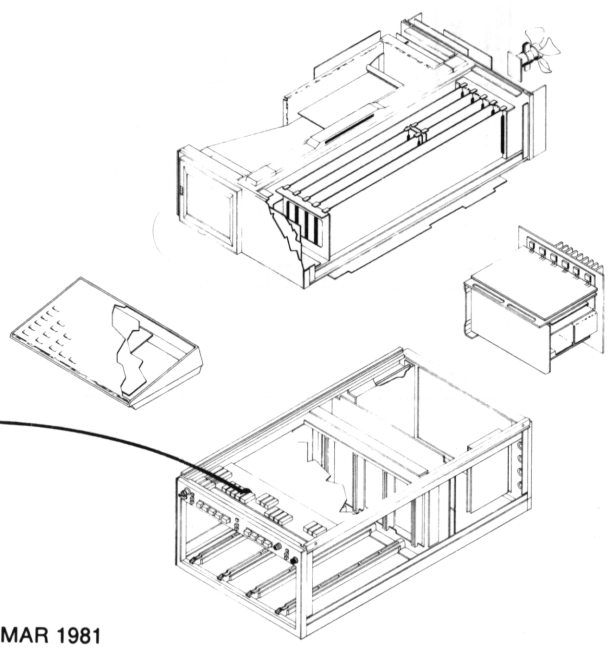

A2
MODE SWITCH
BOARD
Shown on diag. 2

REV A MAR 1981

http://manoman.sghill.com

A2 ASSY

CIRCUIT NUMBER	SCHEM LOCATION	BOARD LOCATION
C1	C1	C3
C15	A4	C2
C16	A4	C3
C22	A3	C3
C27	B4	B3
C61	D1	F3
C62	D3	H3
C70	F1	D2
C72	E3	H2
CR26	B4	B3
CR58	C5	G3
CR89	F4	E5
CR90	F5	I5
CR91	F3	I1
CR92	F3	J2
CR93	F4	J2
CR94	F4	J2
CR95	F4	I2
CR96	F4	I3
CR97	F4	J3
CR98	F4	J3
CR99	F5	J2
CR100	G3	J3
CR101	G3	J3
CR102	G4	J4
CR103	G4	J4
CR104	G4	J4
CR105	G4	J3
CR106	G4	I4
CR107	G4	I4
CR108	G4	J4
CR109	G5	I5
CR117	G4	J4
CR118	G4	I4
CR121	G5	D2
DS101	F3	C6
DS102	F4	C6
DS103	F4	D6
DS104	F4	D6
DS105	F4	E6
DS106	F4	G6
DS107	F4	H6
DS108	F4	H6
DS109	F4	I6
J40	B4	B3
L31	B4	A3
P2	A2	A3
P3	A2	A2
P4	A2	E5
P5	A2	I5
P9	B2	D3
P17	F1	E2
P38	A3	D2
P62	C3	G2
P62	G5	G2
P63	C2	H2
P70	D1	E2
P73	F2	I2
P74	F2	H1
P114	G4	E3
P115	B2	H3
P115	C2	H3
P115	C4	H3
P154	H3	J1
Q15	A4	B2
Q17	A4	B2
Q23	A4	B2
Q91	F3	J2
Q92	F3	K2
Q93	F4	K2
Q94	F4	J2
Q95	F4	K2
Q96	F4	K2
Q97	F4	J2
Q98	F4	K2
Q99	F5	K2
Q114	G4	E3
Q120	G5	E3
Q121	G5	D2
R1	B1	C4
R2	B1	C4
R3	B1	D4
R4	B1	D4
R5	B1	E4
R6	C1	G3
R7	C1	G3
R8	C1	G3
R9	C1	G3
R12	A4	B2
R13	A4	B2
R14	A4	B2
R15	A4	B2
R16	A4	B2
R17	A4	B1
R19	A4	C3
R22	A3	D3
R23	A4	C3
R24	A4	C3
R25	A4	D2
R26	B4	B3
R27	B4	B3
R31	B4	B3
R32	B4	B3
R33	B4	B3
R34	B4	B3
R35	B4	B3
R36	B4	C3
R54	D3	H3
R55	D3	H3
R56	D3	H3
R58	C5	F3
R72	E1	E2
R74	E2	H1
R75	F3	J2
R81	E3	H2
R82	E4	J1
R83	E4	J2
R84	E4	J2
R85	E4	I3
R86	E4	I3
R87	E4	J3
R88	E4	J3
R91	F3	J2
R92	F3	J2
R93	F4	J2
R94	F4	J2
R95	F4	I3
R96	F4	K3
R97	F4	J3
R98	F4	K3
R99	F4	K3
R102	G4	F3
R121	G5	D2
S1	A1	D4
S2	A1	H4
S40	B3	B4
S109	G3	F4
S110	G3	K4
U1	C1	D3
U51A	D2	G3
U51B	D3	G3
U51C	D2	G3
U51D	D2	G3
U52A	D4	I3
U52B	D4	I3
U52C	D4	I3
U52D	D4	I3
U61	D1	G3
U62	D3	H3
U70A	E2	E1
U70B	E2	E1
U71	E1	G2
U72	E3	H2
U73A	E1	F1
U73B	E2	F1
U73C	E2	F1
U73D	E1	F1

PARTIAL A5 ASSY

CIRCUIT NUMBER	SCHEM LOCATION	BOARD LOCATION
P114	G4	C1

Partial A5 ASSY also shown on diagrams 14 and 17.

CHASSIS MOUNTED PARTS

CIRCUIT NUMBER	SCHEM LOCATION	BOARD LOCATION
DS2	A1	CHASSIS
DS4	A2	CHASSIS
DS5	A2	CHASSIS
DS114	H4	CHASSIS
DS120	H5	CHASSIS
DS121	H5	CHASSIS
J1	A1	CHASSIS

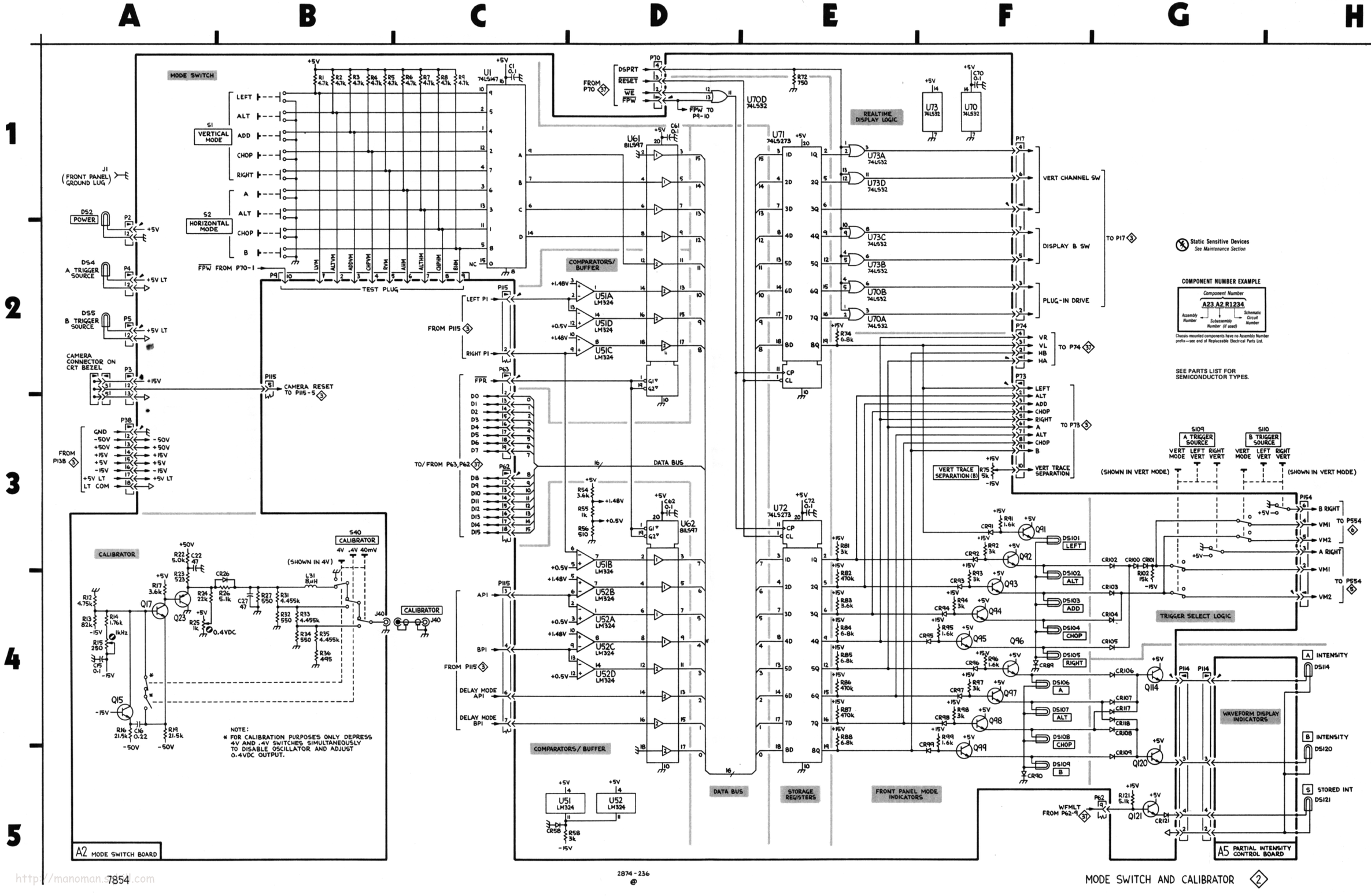
MODE SWITCH
CALIBRATOR
A2 MODE SWITCH BOARD
COMPARATORS/ BUFFER
REALTIME DISPLAY LOGIC
DATA BUS
STORAGE REGISTERS
FRONT PANEL MODE INDICATORS
TRIGGER SELECT LOGIC
WAVEFORM DISPLAY INDICATORS
A5 PARTIAL INTENSITY CONTROL BOARD
MODE SWITCH AND CALIBRATOR
2874-236
7854

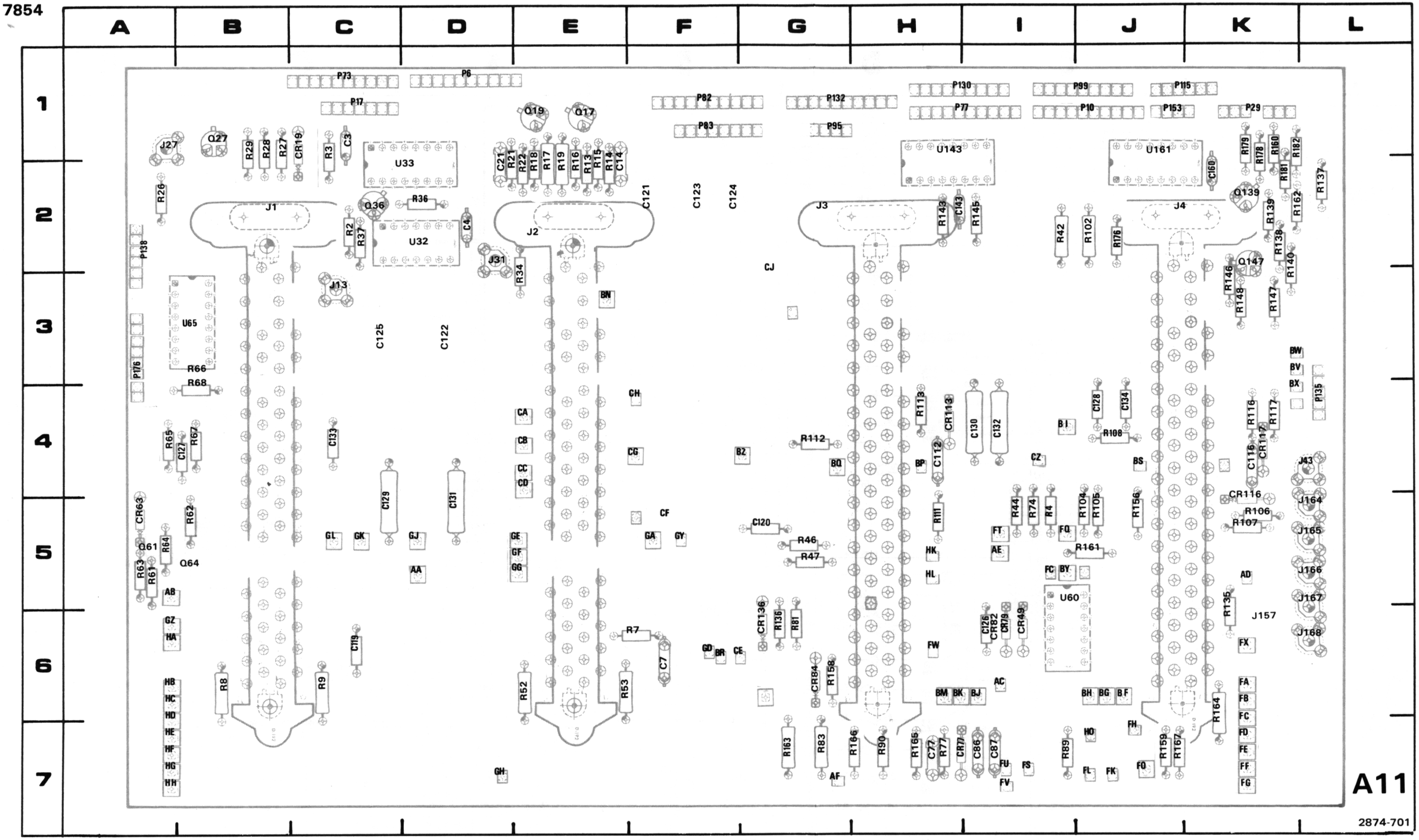

Figure 7-4. A11—Main Interface circuit board assembly.

http://manoman.sqhill.com

MAIN INTERFACE DIAGRAM 3

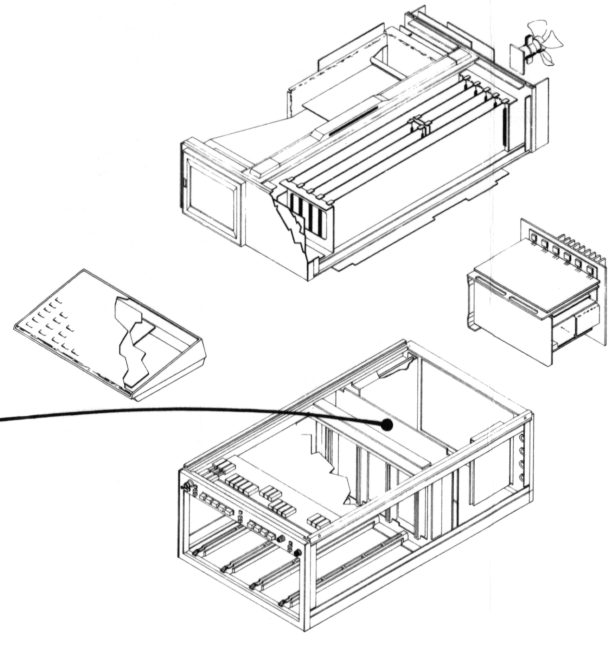

A11
MAIN INTERFACE
BOARD
Shown on diags.
3,4,5,6 & 10

REV A MAR 1981

PARTIAL A11 ASSY

CIRCUIT NUMBER	SCHEM LOCATION	BOARD LOCATION
C3	B2	C1
C4	B2	D2
C7	A3	F6
C14	A4	E2
C21	B4	D2
C77	E3	H7
C86	D5	I7
C87	D5	I7
C112	F2	H4
C116	F2	K4
C119	G1	C6
C120	G1	G5
C121	G1	F2
C122	G1	D3
C123	G1	F2
C124	G1	F2
C125	G1	C3
C126	G1	I6
C127	G1	B4
C128	G1	J4
C129	G1	C4
C130	G1	I4
C131	G1	D5
C132	G1	I4
C133	G1	C4
C134	G1	J4
C143	G3	H2
C160	H4	K2
CR19	B4	C1
CR49	D3	I6
CR63	C5	A5
CR77	E3	H7
CR79	F3	I6
CR82	D3	G6
CR84	F4	H6
CR113	F3	H4
CR116	F2	K5
CR117	G2	K4
CR136	F3	G6
J1	A1	B2
J2	C1	E2
J3	D1	G2
J4	F1	J2
J13	A4	C3
J27	A5	A1
J31	A5	D2
J43	C2	L4
J157	G4	K6
J164	G4	L5
J165	G4	L5
J166	G4	L5
J167	G5	L5
J168	G4	L6
P6	B1	D1
P10	A1	J1
P17	A4	C1
P17	F5	C1
P17	G3	C1
P29	G4	K1
P73	B5	C1
P77	E1	G7
P82	A3	F1
P82	G1	F1
P83	H1	F1
P95	F1	G1
P99	F2	J1
P115	G2	J1
P130	H1	G7
P132	H2	G1
P135	H2	L4
P138	H3	A2
P153	G4	J1
P176	G5	A3
Q17	A4	E1
Q19	B4	E1
Q27	A5	B1
Q36	B5	C2
Q61	C5	A5
Q64	D5	A5
Q139	G3	K2
Q147	G3	K2
R3	B2	C1
R4	A2	C2
R7	A3	F6
R8	B3	B6
R9	B3	C6
R13	A4	E2
R14	A4	E2
R15	A4	E2
R16	A4	E2
R17	A4	E2
R18	A4	E2
R19	B4	E2
R21	B4	D2
R22	B4	E1
R26	A5	A2
R27	B5	B1
R28	B5	B1
R29	B5	B1
R34	B5	E3
R36	B5	D2
R37	B5	C2
R42	D1	I2
R44	C2	I5
R46	D2	G5
R47	D3	G5
R52	C3	E6
R53	C3	E6
R61	C5	A5
R62	C5	B5
R63	C5	A5
R64	D5	A5
R65	E5	A4
R66	D5	B3
R67	E5	B4
R68	E5	B3
R74	D2	I5
R77	E3	H7
R81	D3	G6
R83	D4	G7
R89	F5	I7
R90	D5	H7
R102	F1	J2
R104	F2	J5
R105	F2	J5
R106	F2	K5
R107	F3	K5
R108	F3	J4
R111	F2	H5
R112	F3	G4
R113	F3	H4
R116	G2	K4
R117	G2	K4
R135	F3	K5
R136	F3	G6
R137	F4	L2
R138	F3	K2
R139	G3	K2
R140	G3	K2
R143	G3	H2
R145	G3	I2
R146	G3	K3
R147	G3	K3
R148	G3	K3
R156	G4	J5
R158	F4	G6
R159	G4	J7
R160	H4	K1
R161	F4	J5
R162	G4	K2
R163	F4	G7
R164	E4	K6
R165	F4	H7
R166	G5	G7
R167	G5	J7
R176	G4	J2
R178	G4	K1
R179	G4	K1
R181	F4	K2
R182	G4	K1
U32A	B4	D2
U32B	B4	D2
U32C	B4	D2
U32D	B4	D2
U33	B4	D2
U60B	D4	I5
U60C	D4	I5
U60D	D4	I5
U65A	E5	B3
U65B	D5	B3
U65C	E5	B3
U65D	E5	B3
U65E	C5	B3
U143	G3	G7
U161A	F4	J1
U161B	G4	J1
U161C	G4	J1
U161E	G4	J1
U161F	F4	J1

Partial A11 ASSY also shown on diagram 4, 5, 6, and 10.

http://manoman.sqhill.com

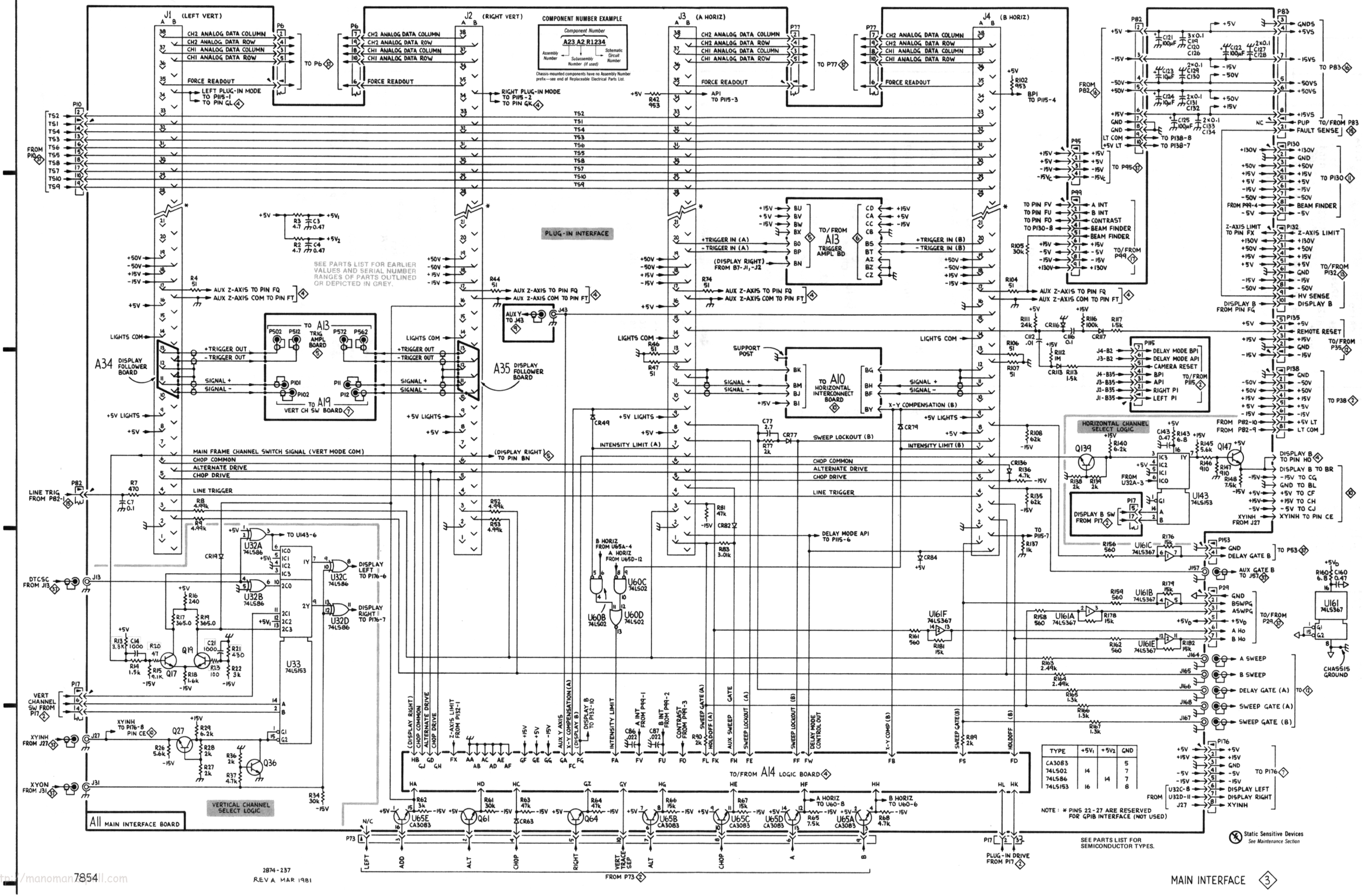

TYPE	+5V1	+5V2	GND
CA3083			5
74LS02	14		7
74LS86	14	14	7
74LS153	16		8

http://manomanuals.com

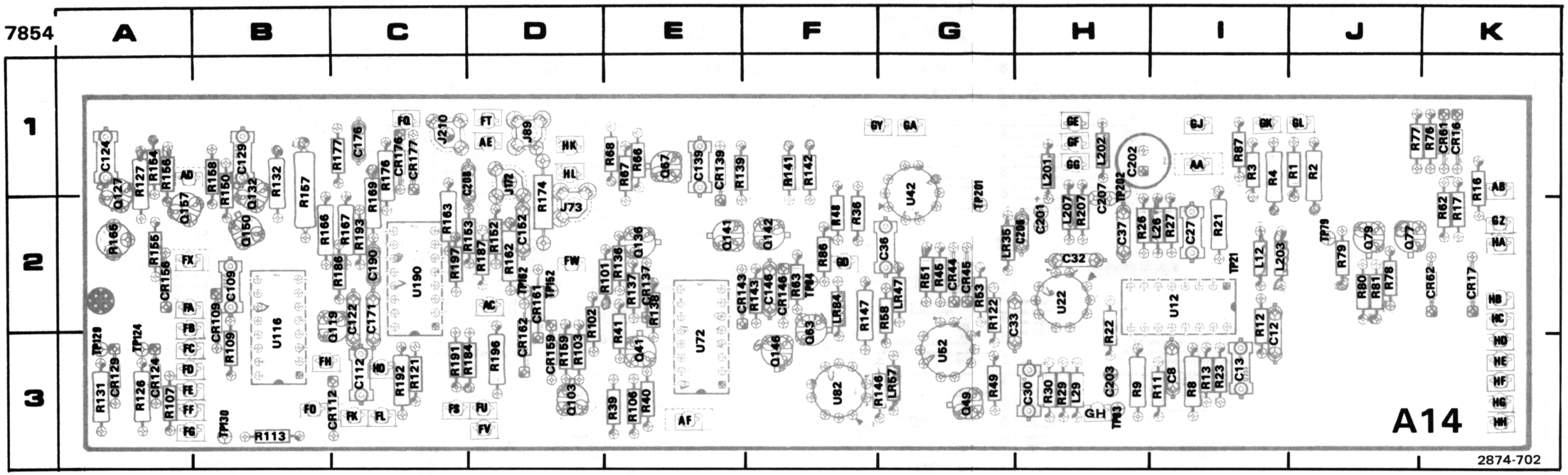

REV A MAR 1981

Figure 7-5. A14—Logic circuit board assembly.

COMPONENT NUMBER EXAMPLE

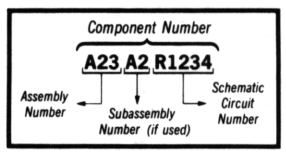

Chassis-mounted components have no Assembly Number prefix—see end of Replaceable Electrical Parts List.

Static Sensitive Devices
See Maintenance Section

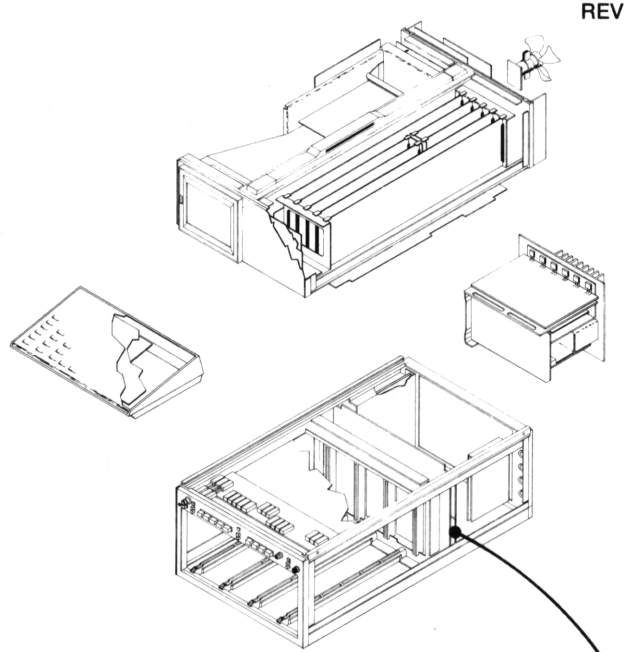

A14
LOGIC
BOARD
Shown on diag. 4

http://manoman.sqhill.com

MAINFRAME LOGIC DIAGRAM 4

A14 ASSY

CIRCUIT NUMBER	SCHEM LOCATION	BOARD LOCATION
C8	B2	F3
C12	B2	F3
C13	B2	F3
C27	C1	I2
C30	C2	H3
C32	C1	H2
C33	C2	G2
C36	C2	G2
C37	C2	H2
C109	D3	B2
C112	C3	C3
C122	A4	C2
C124	F3	A1
C129	G3	B1
C139	F3	E1
C146	G3	F2
C152	B4	D2
C171	E4	C2
C176	B5	C1
C190	E3	C2
C201	G4	H2
C202	G4	H1
C203	G4	H3
C206	G4	H2
C207	G4	H2
C208	G4	C1
CR16	C1	K1
CR17	C1	K2
CR44	D1	G2
CR45	D1	G2
CR61	F1	K1
CR62	F1	K2
CR109	D3	B2
CR112	C3	C3
CR124	F3	A3
CR129	G3	A3
CR137	F3	E2
CR139	F3	E1
CR143	F3	E2
CR146	G3	F2
CR156	A4	A2
CR159	D4	D3
CR161	C4	D2
CR162	D4	D3
CR176	B5	C1
CR177	B5	C1
J73	F2	D2
J89	A3	D1
J172	A5	D1
J210	G5	C1
L12	B3	I2
L26	C1	I2
L29	C2	H3
L201	G4	H1
L202	G4	H1
L203	G4	I2
L207	G4	H2
LR35	C2	G2
LR47	D2	G2
LR57	E2	G3
LR84	G2	F2
Q41	D2	E3
Q49	E2	G3
Q63	G1	F2
Q67	F2	E1
Q77	F1	J2
Q79	F1	J2
Q103	C3	D3
Q119	E3	C2
Q127	G3	A1
Q132	G3	B1
Q136	E3	E2
Q141	F3	E2
Q142	F3	F2
Q146	G3	F3
Q150	B4	B2
Q157	B4	A2
R1	A1	J1
R2	A1	J1
R3	B2	I1
R4	B2	I1
R8	B2	F3
R9	B2	H3
R11	B2	F3
R12	B2	I2
R13	B2	F3
R16	B1	K1
R17	C1	K2
R21	B1	I2
R22	B2	H2
R23	B2	F3
R26	C1	H2
R27	C1	I2
R29	C2	H3
R30	C2	H3
R36	C2	F2
R39	D1	E3
R40	D1	E3
R41	D2	E3
R45	D1	G2
R48	D2	F2
R49	E2	G3
R51	E2	G2
R53	G2	G2
R58	E2	G2
R62	F1	K2
R63	F1	F2
R66	F2	E1
R67	F2	E1
R68	F2	E1
R76	F1	K1
R77	F1	J1
R78	F1	J2
R79	F1	J2
R80	F1	J2
R81	F1	J2
R86	G2	F2
R87	G2	I1
R101	C3	E2
R102	C3	D2
R103	C3	D3
R106	D3	E3
R107	A3	A3
R109	D3	B3
R113	D3	B3
R121	A4	C3
R122	E3	G2
R126	F3	A3
R127	G3	A1
R131	G3	A3
R132	G3	B1
R136	E3	E2
R137	E3	E2
R138	F3	E2
R139	F3	E1
R141	F3	E3
R142	F3	E3
R143	F3	F2
R146	G3	F3
R147	G3	F2
R150	B4	B1
R152	B3	D2
R153	B4	C2
R154	B4	A1
R155	B4	A2
R156	A4	A1
R157	B4	B1
R158	B4	B1
R159	C4	D3
R162	E4	D2
R163	D4	C2
R165	D4	A2
R166	D4	B2
R167	D4	C2
R169	E4	C1
R174	A5	D1
R176	B5	C1
R177	B5	C1
R184	E5	C3
R186	E5	C2
R187	E5	D2
R191	E5	C3
R192	E5	C3
R193	E5	C2
R196	E5	D3
R197	E5	C2
R207	G4	H2
TP21	B1	I2
TP79	G1	J2
TP83	G1	H3
TP84	G2	F2
TP124	F3	A3
TP129	G3	A3
TP130	F3	B3
TP152	B3	D2
TP162	D4	D2
TP201	G4	G1
TP202	G4	H1
U12	B2	I2
U22	C2	H2
U42	D2	G1
U52	E2	G3
U72	F2	E3
U82	G2	F3
U116	D3	B3
U190	E4	C2

http://manoman.sqhill.com

VOLTAGE CONDITIONS

The voltages shown were taken with the 7854 controls set as follows: CRT DISPLAY (SCOPE); TRIGGER SOURCE (VERT MODE); VERTICAL MODE (LEFT); HORIZONTAL MODE (B); READOUT INTENSITY (OFF). No plug-in units were installed.

Voltage Conditions. The voltages on the diagram were taken using a digital multimeter with a 10 MΩ input impedance (Tektronix DM 501 Digital Multimeter installed in a TM 501 Power Module or a Tektronix 7D13 Digital Multimeter used with a readout-equipped 7000-Series Oscilloscope).

http://manoman.sqhill.com

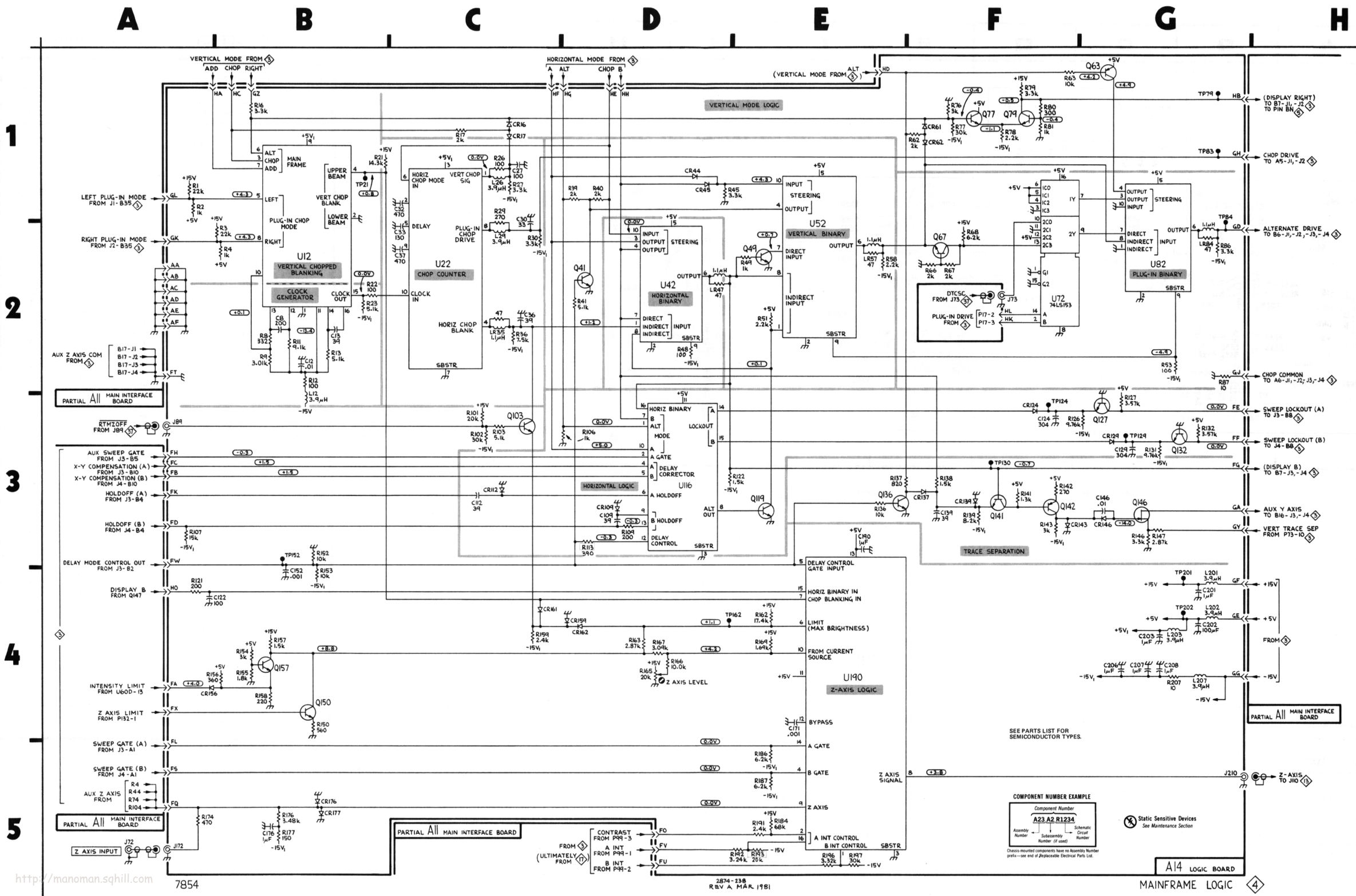
VERTICAL MODE FROM 3
ADD CHOP RIGHT
HORIZONTAL MODE FROM 3
A ALT CHOP B
(VERTICAL MODE FROM 3 ALT)
VERTICAL MODE LOGIC
HORIZONTAL LOGIC
TRACE SEPARATION
Z AXIS LOGIC
MAIN FRAME
U12
VERTICAL CHOPPED BLANKING
CLOCK GENERATOR
U22
CHOP COUNTER
U52
VERTICAL BINARY
U42
HORIZONTAL BINARY
U116
U190
U72
74LS153
U82
PLUG-IN BINARY
LEFT PLUG-IN MODE FROM J1-B35 3
RIGHT PLUG-IN MODE FROM J2-B35 3
AUX Z AXIS COM FROM 3
B17-J1
B17-J2
B17-J3
B17-J4
PARTIAL All MAIN INTERFACE BOARD
RTMZOFF FROM J89 3
AUX SWEEP GATE FROM J3-B5
X-Y COMPENSATION (A) FROM J3-B10
X-Y COMPENSATION (B) FROM J4-B10
HOLDOFF (A) FROM J3-B4
HOLDOFF (B) FROM J4-B4
DELAY MODE CONTROL OUT FROM J3-B2
DISPLAY B FROM Q147
INTENSITY LIMIT FROM U60D-13
Z AXIS LIMIT FROM P132-1
SWEEP GATE (A) FROM J3-A1
SWEEP GATE (B) FROM J4-A1
AUX Z AXIS FROM
Z AXIS INPUT
DTCSC FROM J73 3
PLUG-IN DRIVE FROM 3
(DISPLAY RIGHT) TO B7-J1, -J2 TO PIN BN 3
CHOP DRIVE TO A5-J1, -J2 3
ALTERNATE DRIVE TO B6-J1, -J2, -J3, -J4 3
CHOP COMMON TO A6-J1, -J2, J3, -J4 3
SWEEP LOCKOUT (A) TO J3-B8 3
SWEEP LOCKOUT (B) TO J4-B8 3
(DISPLAY B) TO B7-J3, -J4 3
AUX Y AXIS TO B16-J3, -J4 3
VERT TRACE SEP FROM P73-10 3
FROM 3
Z-AXIS TO J110 13
DELAY CONTROL GATE INPUT
HORIZ BINARY IN CHOP BLANKING IN
LIMIT (MAX BRIGHTNESS)
FROM CURRENT SOURCE
Z AXIS LEVEL
BYPASS
A GATE
B GATE
Z AXIS
Z AXIS SIGNAL
CONTRAST FROM P99-3
A INT FROM P99-1
B INT FROM P99-2
(ULTIMATELY FROM 17)
A INT CONTROL
B INT CONTROL
SEE PARTS LIST FOR SEMICONDUCTOR TYPES.
COMPONENT NUMBER EXAMPLE
Component Number
A23 A2 R1234
Assembly Number
Subassembly Number (if used)
Schematic Circuit Number
Chassis-mounted components have no Assembly Number prefix—see end of Replaceable Electrical Parts List.
Static Sensitive Devices
See Maintenance Section
A14 LOGIC BOARD
MAINFRAME LOGIC 4
7854
2874-238
REV A MAR 1981
http://manoman.sqhill.com

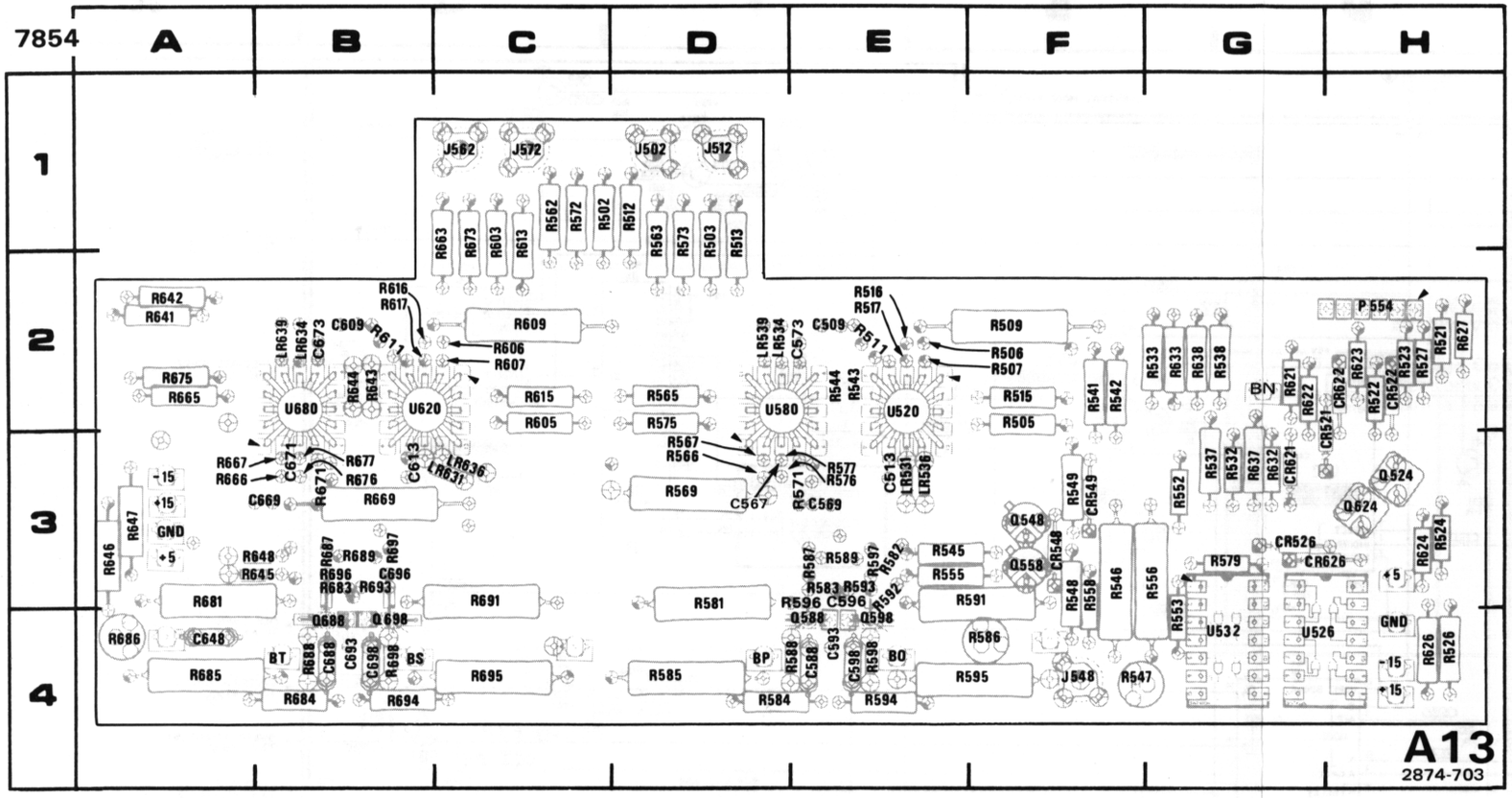

REV A MAR 1981

Figure 7-6. A13—Trigger Amplifier circuit board assembly.

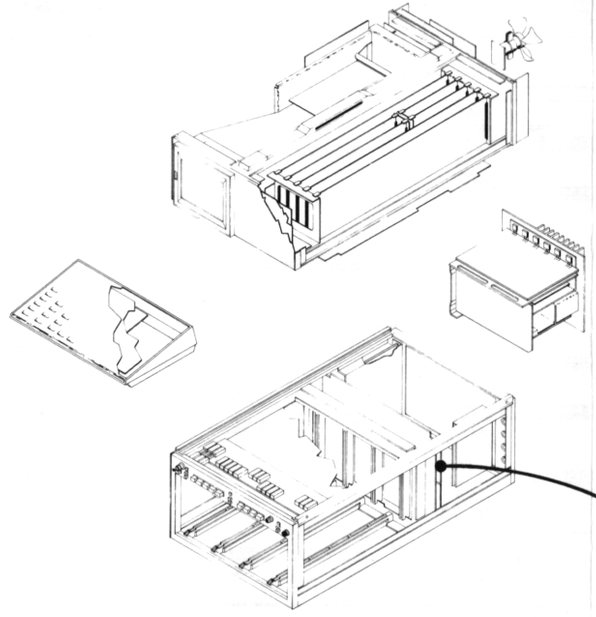

A13
TRIGGER AMPLIFIER
BOARD
Shown on diags.
5 & 6

PARTIAL A13 ASSY

CIRCUIT NUMBER	SCHEM LOCATION	BOARD LOCATION	CIRCUIT NUMBER	SCHEM LOCATION	BOARD LOCATION
C509	C1	E2	R533	D4	G2
C513	D3	E3	R537	C3	G3
C567	D4	E3	R538	D3	G2
C569	C4	E3	R541	E3	F2
C573	D5	E2	R542	E3	F2
C588	F2	E4	R543	E5	E2
C593	F3	E4	R544	E1	E2
C596	F3	E3	R545	F1	E3
C598	F4	E4	R546	F1	F3
			R547	F1	F4
CR521	C2	H2	R548	F1	F3
CR522	B3	H2	R549	F1	F3
CR526	C3	G3	R552	F1	G3
CR548	F1	F3	R553	F1	G4
CR549	G1	F3	R555	F2	E3
			R556	F1	G3
J502	A1	D1	R558	F2	F3
J512	A2	D1	R562	B4	C1
J548	G1	F4	R563	B4	D1
J562	A4	C1	R565	D4	D2
J572	A5	C1	R566	D4	C3
			R567	D4	C3
LR531	D2	E3	R569	C5	C3
LR534	D4	D2	R571	D5	E3
LR536	D3	E3	R572	B5	C1
LR539	D3	D2	R573	B5	D1
			R575	D5	D2
P554	A2	H2	R576	D5	E3
			R577	D5	E3
Q524	B3	H3	R579	G4	G3
Q548	F1	F3	R581	F3	C3
Q558	F2	F3	R582	F3	E3
Q588	F2	E4	R583	F3	E3
Q598	F4	E4	R584	F2	D4
			R585	G1	D4
R502	A1	C1	R586	F3	F4
R503	B1	D1	R587	G3	E3
R505	D1	F2	R588	F3	E4
R506	D1	F2	R589	G3	E3
R507	D1	F2	R591	F3	F3
R509	C2	F2	R592	F4	E3
R511	D3	E2	R593	F3	E3
R512	B2	D1	R594	G4	E4
R513	B2	D1	R595	G4	F4
R515	D2	F2	R596	F3	E3
R516	D2	E2	R597	G3	E3
R517	D2	E2	R598	F4	E4
R521	C2	H2			
R522	B3	G3	U520	D1	E2
R523	B3	H2	U526B	C4	G4
R524	B3	H3	U526C	C3	G4
R526	C3	H4	U532B	C3	G4
R527	C4	H2	U532C	C3	G4
R532	D2	G3	U580	D5	D2

Partial A13 ASSY also shown on diagram 6.

Static Sensitive Devices
See Maintenance Section

COMPONENT NUMBER EXAMPLE

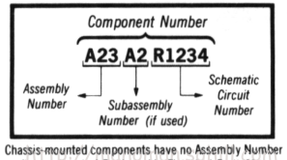

Chassis-mounted components have no Assembly Number prefix—see end of Replaceable Electrical Parts List.

VOLTAGE CONDITIONS

The voltages shown were taken with the 7854 controls set as follows: CRT DISPLAY (SCOPE); TRIGGER SOURCE (VERT MODE); VERTICAL MODE (LEFT); HORIZONTAL MODE (B). All variable controls were set to mid-range. No plug-in units were installed.

Voltage Condtions. The voltages on the diagram were taken using digital multimeter with a 10 MΩ input impedance (Tektronix DM 501 Digital Multimeter installed in a TM 501 Power Module or a Tektronix 7D13 Digital Multimeter used with a readout-equipped 7000-Series Oscilloscope).

Selectable Electrical Parts Table
For Diagram 5

Component Number	Reason For Selection	Component Value
A13R596	To obtain trigger bandwidth	10—240Ω
A13C596		2.7—6.8 pF

http://manoman.sqhit.com

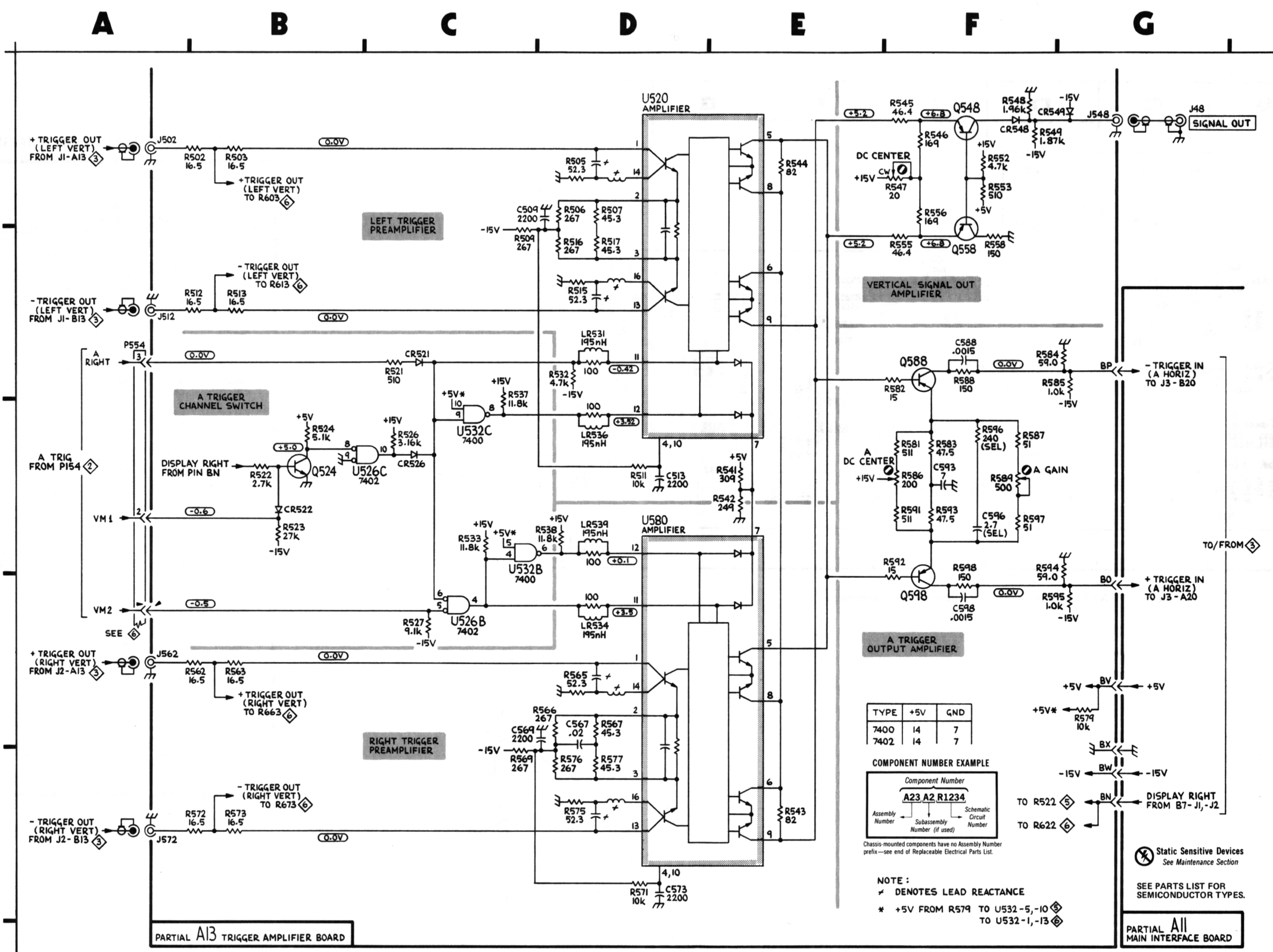

http://manoman.sqhill.com

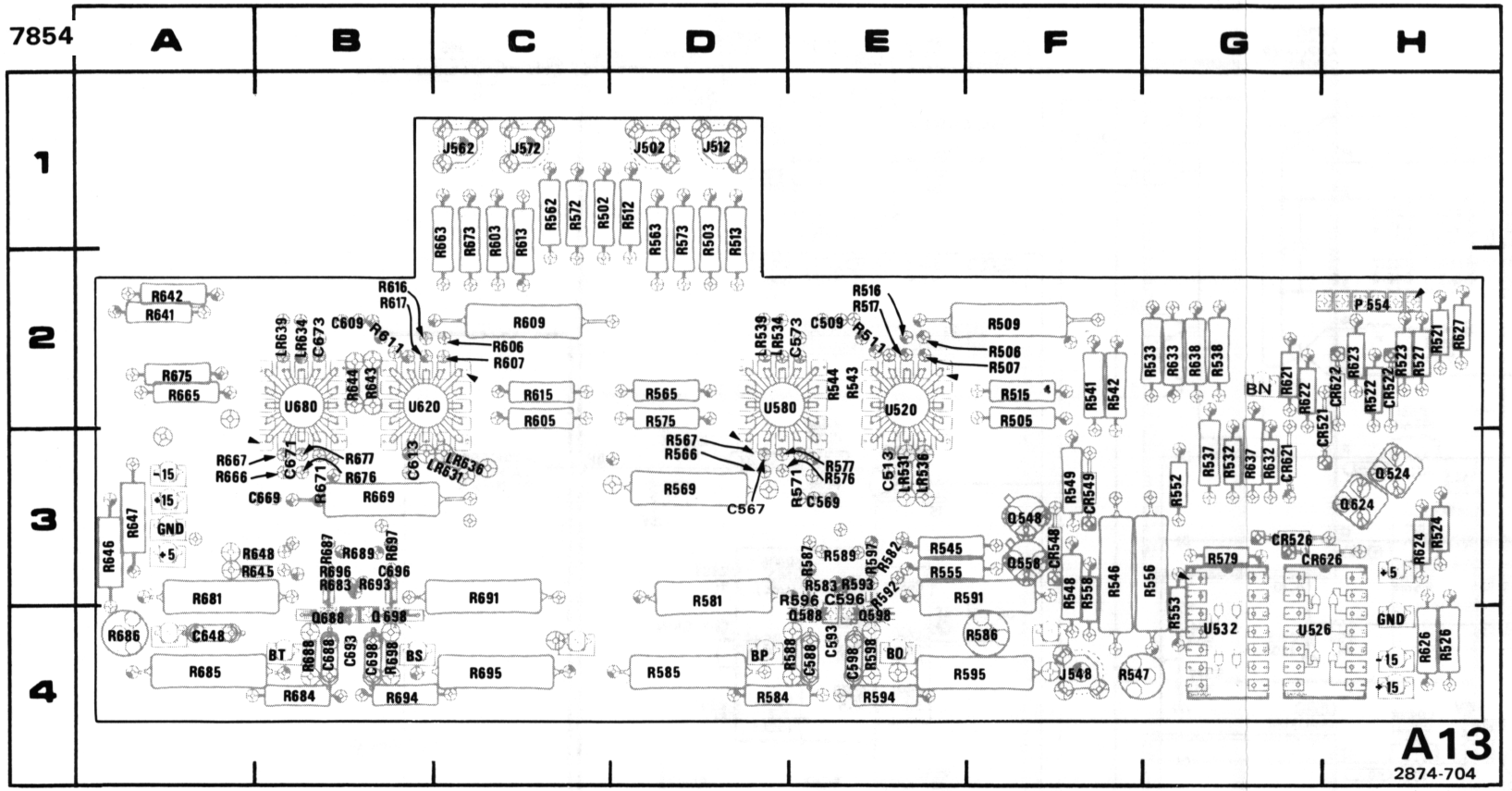

A13
2874-704

REV A MAR 1981

Figure 7-7. A13—Trigger Amplifier circuit board assembly.

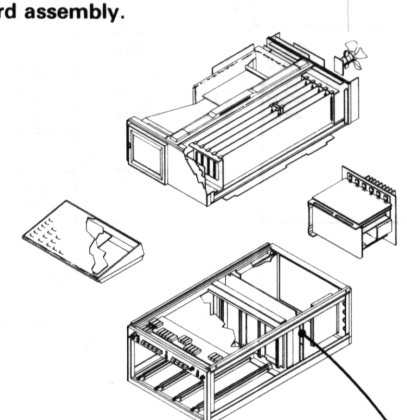

A13
TRIGGER AMPLIFIER
BOARD
Shown on Diags. 5 & 6

B TRIGGER SELECTOR DIAGRAM 6

PARTIAL A13 ASSY

CIRCUIT NUMBER	SCHEM LOCATION	BOARD LOCATION	CIRCUIT NUMBER	SCHEM LOCATION	BOARD LOCATION
C609	C1	B2	R633	D4	G2
C613	D3	B3	R637	C2	G3
C648	E3	A4	R638	D3	G2
C669	C4	B3	R641	E3	A2
C671	D5	B3	R642	E3	A2
C673	D5	B2	R643	E5	B2
C688	F2	B4	R644	E1	B2
C693	F3	B4	R645	F3	B3
C696	F3	B3	R646	E3	A3
C698	F4	B4	R647	E3	A3
			R648	F3	B3
CR621	C2	G3	R663	B4	C1
CR622	B3	H2	R665	D4	A2
CR626	C3	G3	R666	D4	A3
			R667	D4	A3
LR631	D2	C3	R669	C5	B3
LR634	D4	B2	R671	D5	B3
LR636	D3	C3	R673	B5	C1
LR639	D3	B2	R675	D5	A2
			R676	D5	B3
P554	A2	H2	R677	D5	B3
			R681	F3	A3
Q624	B3	H3	R683	F3	B3
Q688	F2	B4	R684	G2	B4
Q698	F4	B4	R685	G2	A4
			R686	F3	A4
R69	C2	B3	R687	G3	B3
R603	B1	C1	R688	F2	B4
R605	D1	C2	R689	G3	B3
R606	D1	C2	R691	F3	C3
R607	D1	C2	R693	F3	B3
R609	D2	C2	R694	G3	B4
R611	D3	B2	R695	G4	C4
R613	B2	C1	R696	F3	B3
R615	D2	C2	R697	G3	B3
R616	D2	B2	R698	F4	B4
R617	D2	B2			
R621	C2	G2	U526A	C4	G4
R622	B3	G2	U526D	C3	G4
R623	B3	H2	U532A	C3	G4
R624	B3	H3	U532D	C3	G4
R626	C3	H4	U620	D1	B2
R627	C4	H2	U680	D5	B2
R632	D2	G3			

Partial A13 ASSY also shown on diagram 5.

http://manoman.sqhill.com

VOLTAGE CONDITIONS

The voltages shown were taken with the 7854 controls set as follows: CRT DISPLAY (SCOPE); TRIGGER SOURCE (VERT MODE); VERTICAL MODE (LEFT); HORIZONTAL MODE (B). All variable controls were set to midrange. No plug-in units were installed.

Voltage Conditions. The voltages on the diagram were taken using a digital multimeter with a 10 MΩ input impedance (Tektronix DM 501 Digital Multimeter installed in a TM 501 Power Module or a Tektronix 7D13 Digital Multimeter used with a readout-equipped 7000-Series Oscilloscope.

Selectable Electrical Parts Table
For Diagram 6

Component Number	Reason For Selection	Component Value
R696	To obtain trigger bandwidth	10—240 Ω
C696		2.7—6.8 pF

http://manoman.sqhill.com

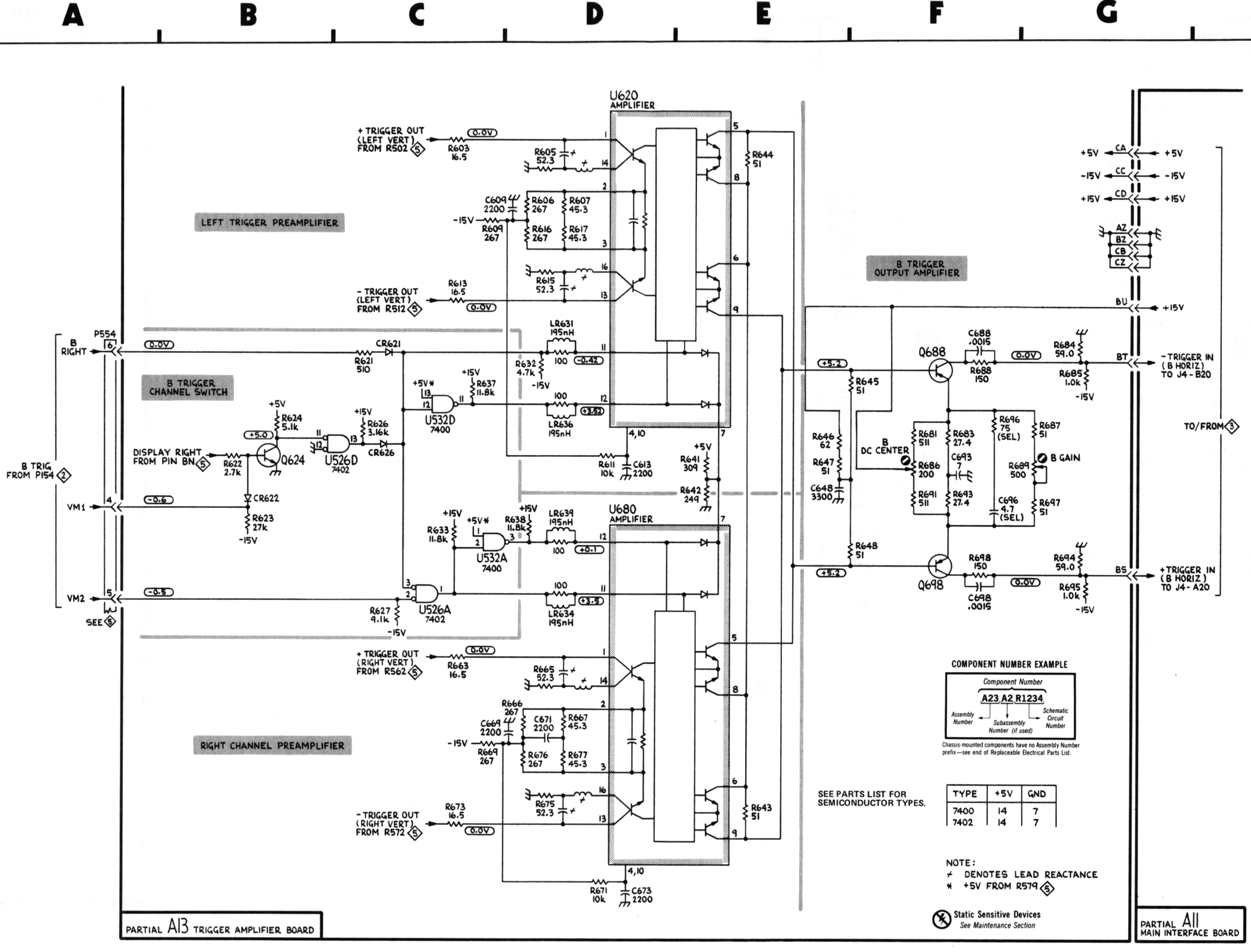

http://manoman.sghill.com

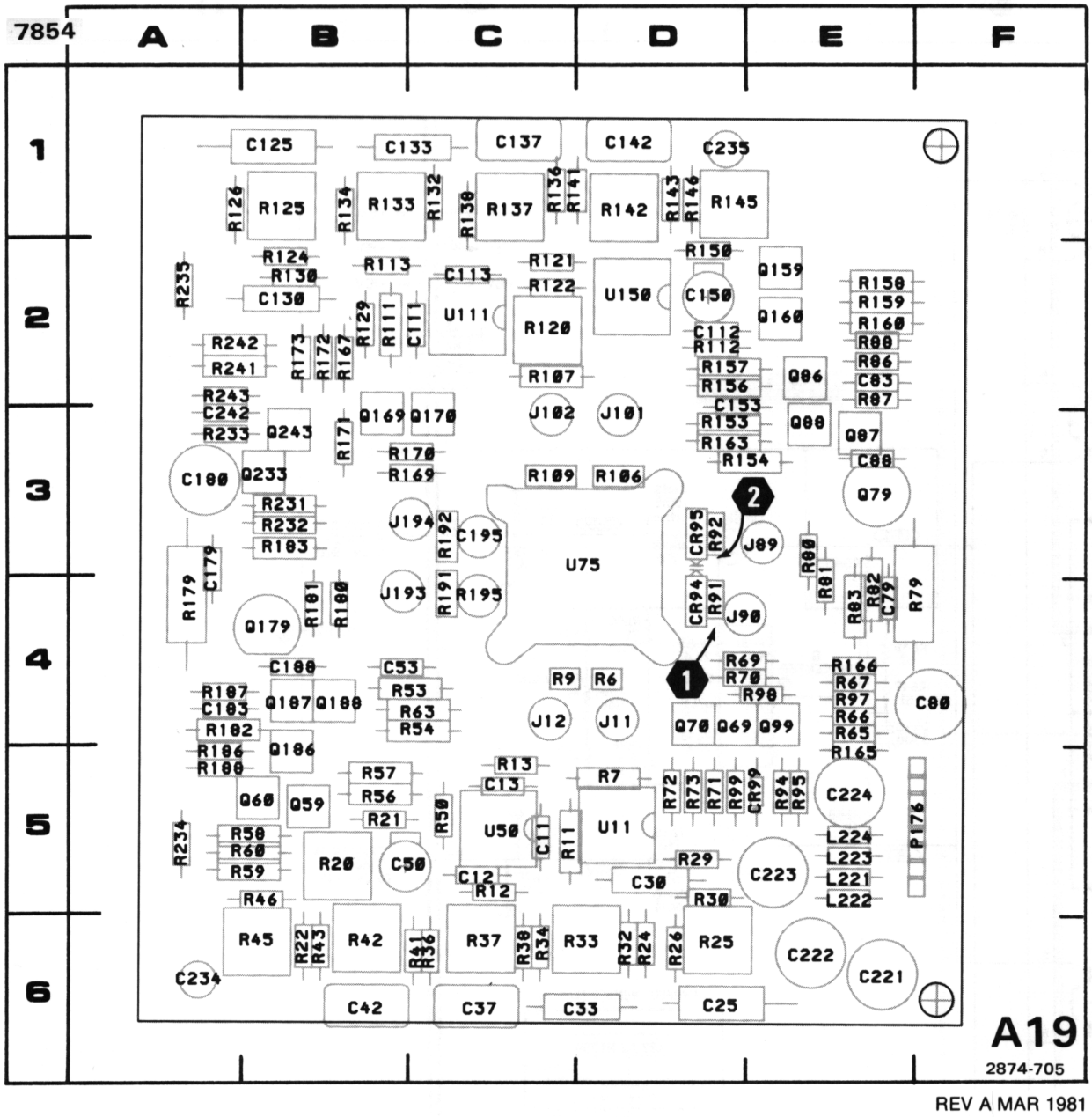

Figure 7-8. A19—Vertical Channel Switch circuit board assembly.

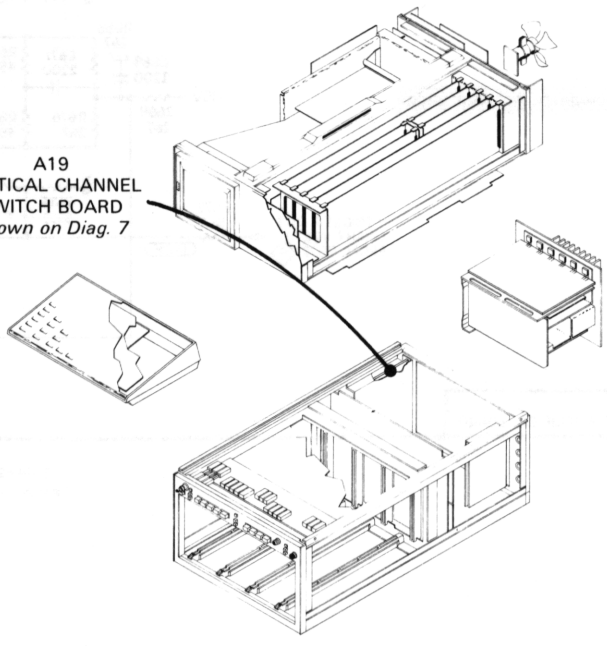

http://manoman.sqhill.com

VERTICAL CHANNEL SWITCH DIAGRAM 7

A19 ASSY PARTIAL

CIRCUIT NUMBER	SCHEM LOCATION	BOARD LOCATION
C11	B1	C5
C12	B2	C5
C13	B2	C5
C25	B2	D6
C30	B2	D5
C33	B2	D6
C37	B2	C6
C42	C2	B6
C50	C2	C5
C53	D1	C4
C79	E1	E4
C80	E1	F4
C83	E2	E2
C88	F2	E3
C111	B3	C2
C112	B3	D2
C113	B3	C2
C125	B4	B1
C130	B4	B2
C133	B4	C1
C137	B4	C1
C142	C4	D1
C150	C4	D2
C153	D3	D3
C179	E3	A3
C180	E3	A3
C183	E4	A4
C188	F3	B4
C195	F3	C3
C221	B4	E6
C222	B4	E6
C223	B5	D5
C224	B5	E5
C234	C4	A6
C235	C5	D1
C242	D5	A3
CR94	F1	D4
CR95	F2	D3
CR99	F3	E5
J11	A1	D4
J12	A1	C4
J89	F2	E3
J90	F1	E4
J101	A3	D3
J102	A3	C3
J193	F3	C4
J194	F4	C3
L221	A4	E5
L222	A4	E5
L223	A4	E5
L224	A5	E5
P176	A2	F5
P176	A4	F5
P176	F2	F5
Q59	D2	B5
Q60	D2	B5
Q69	C2	D4
Q70	C2	D4
Q79	E1	E3
Q86	E2	E2
Q87	F1	E3
Q88	F2	E3
Q99	F2	E4
Q159	D4	E2
Q160	D4	E2
Q169	C3	B3
Q170	D3	C3
Q179	E3	B4
Q186	E3	B5
Q187	F3	B4
Q188	F3	B4
Q233	C4	B3
Q243	D5	B3
R6	A1	D4
R7	A2	D5
R9	B1	C4
R11	B1	C5
R12	B2	C5
R13	B2	C5
R20	A2	B5
R21	A2	B5
R22	B2	B6
R24	B2	D6
R25	B2	D6
R26	B2	D6
R29	B2	D5
R30	B2	D5
R32	B2	D6
R33	B2	D6
R34	B2	C6
R36	C2	C6
R37	C2	C6
R38	C2	C6
R41	C2	C6
R42	C2	B6
R43	C2	B6
R45	C2	B6
R46	C2	B5
R50	C2	B5
R53	D1	C4
R54	D2	C4
R56	D2	B5
R57	D2	B5
R58	D2	B5
R59	D2	B5
R60	D2	B5
R63	D1	C4
R65	B2	E4
R66	B2	E4
R67	B2	E4
R69	C2	E4
R70	C2	E4
R71	C3	D5
R72	C2	D5
R73	C2	D5
R79	E1	E4
R80	E2	E3
R81	E1	E4
R82	E2	E4
R83	E2	E4
R86	E1	E2
R87	F1	E2
R88	F2	E2
R91	F2	D4
R92	F2	D3
R94	F1	E5
R95	F2	E5
R97	F2	E4
R98	F2	E4
R99	F3	D5
R106	A4	D3
R107	A4	C2
R109	B3	C3
R111	B3	B2
R112	B3	D2
R113	B3	B2
R120	A4	C2
R121	A4	C2
R122	B4	C2
R124	B4	B2
R125	B4	B1
R126	B4	A1
R129	B4	B2
R130	B4	B2
R132	B4	C1
R133	B4	B1
R134	B4	B1
R136	C4	C1
R137	C4	C1
R138	C4	C2
R141	C4	C1
R142	C4	D1
R143	C4	D1
R145	C4	D1
R146	C4	D1
R150	C4	D2
R153	D3	D3
R154	D4	D3
R156	D4	D2
R157	D4	D2
R158	D4	E2
R159	D4	E2
R160	D4	E2
R163	D3	D3
R165	C3	E5
R166	C3	E4
R167	C3	B2
R169	D2	C3
R170	D3	C3
R171	D3	B3
R172	D3	B2
R173	D3	B2
R179	E3	A4
R180	E3	B4
R181	E3	B4
R182	E3	A4
R183	E4	B3
R186	E3	A5
R187	F3	A4
R188	F4	A5
R191	F3	C4
R192	F4	C3
R195	F3	C4
R231	B4	B3
R232	B5	B3
R233	C4	A3
R234	C4	A5
R235	C5	A2
R241	D4	A2
R242	D5	A2
R243	D4	A2
U11	B2	D5
U50	C2	C5
U75	D1	D3
U111	B4	C2
U150	C4	D2

http://manoman.sqhill.com

VOLTAGE AND WAVEFORM CONDITIONS

The voltages and waveforms shown were obtained with the 7854 controls set as follows: CRT DISPLAY (SCOPE); TRIGGER SOURCE (VERT MODE); VERTICAL MODE (LEFT); HORIZONTAL MODE (B); READOUT INTENSITY (OFF).

Voltage Conditions. The voltages were taken with a digital multimeter with a 10 MΩ input impedance (Tektronix DM 501 Digital Multimeter installed in a TM 501 Power Module or Tektronix 7D13 Digital Multimeter used with a readout-equipped 7000-Series Oscilloscope).

Waveform Conditions. The waveforms shown below were obtained using a test oscilloscope system with 10 MΩ impedance, at least 60 MHz bandwidth and 10X probe (Tektronix 7603 Oscilloscope, 7B92 Time Base, 7A13 Differential Comparator and P6063A Probe).

A Calibration Fixture (Tektronix 067-0587-01 with controls set as follows: REP RATE (1 KHz); STEP RESPONSE (+); AMPLITUDE (6 divisions) was installed in the LEFT VERT compartment of the 7854 and a 7B80 Time Base with controls set as follows: TRIGGERING (P-P AUTO, AC, INT); TIME/DIV (1 ms) was installed in the B Horizontal compartment of the 7854.

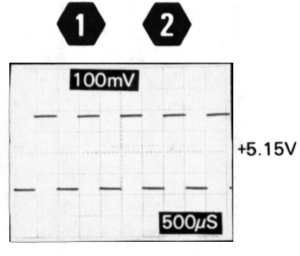

http://manoman.sqhill.com

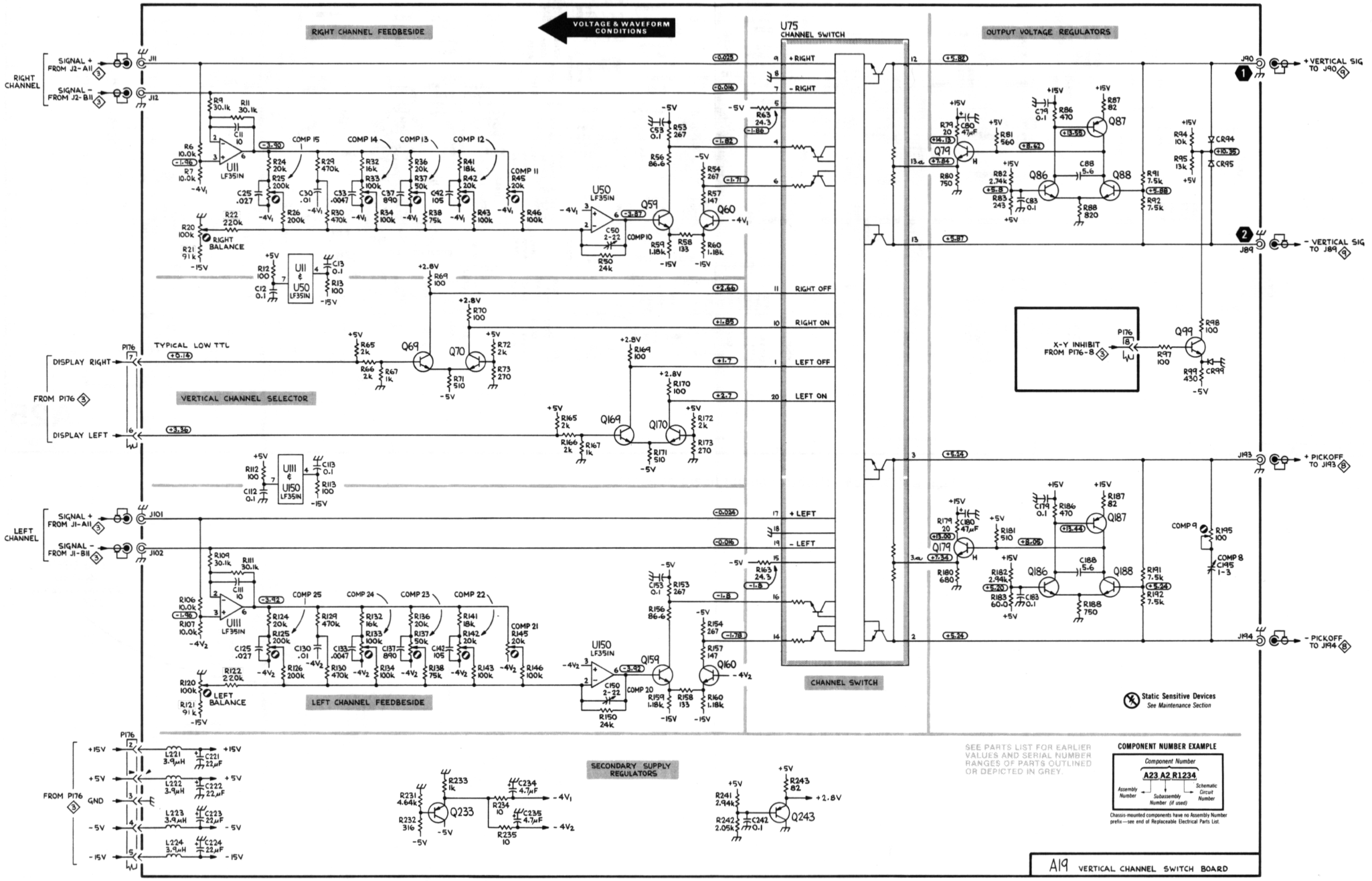

http://manoman.sqhill.com

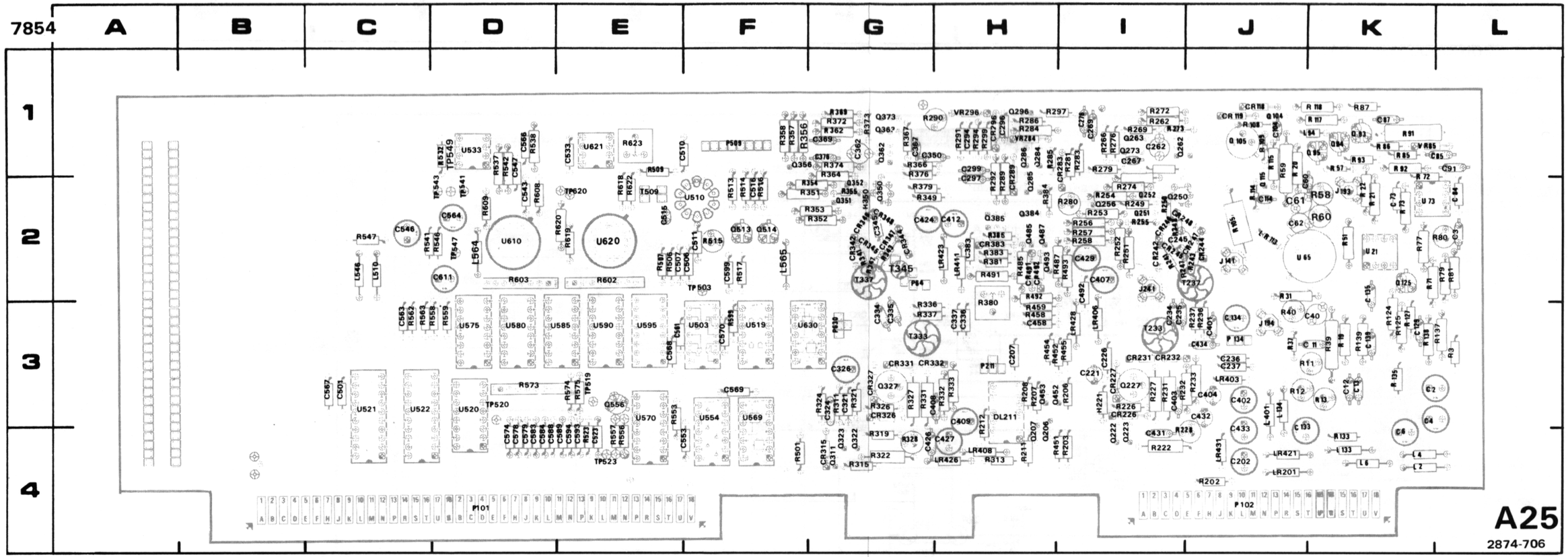

REV A MAR 1981

Figure 7-9. A25—Digitizer circuit board assembly.

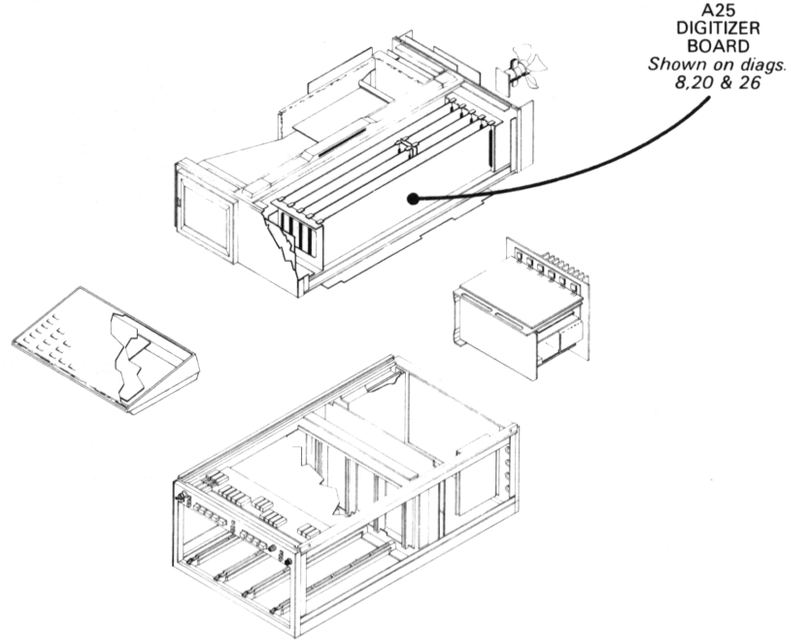

Static Sensitive Devices
See Maintenance Section

COMPONENT NUMBER EXAMPLE

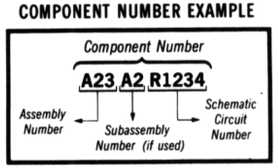

Chassis-mounted components have no Assembly Number prefix—see end of Replaceable Electrical Parts List.

http://manoman.sqhill.com

VERTICAL PICKOFF AMPLIFIER DIAGRAM 8

PARTIAL A25 ASSY

CIRCUIT NUMBER	SCHEM LOCATION	BOARD LOCATION	CIRCUIT NUMBER	SCHEM LOCATION	BOARD LOCATION
C2	B1	K3	R11	B3	J3
C3	B1	L2	R12	B3	J3
C4	B1	K3	R13	B3	K3
C6	B2	K4	R19	C3	K3
C11	B3	J3	R20	C3	J1
C12	B3	K3	R21	C3	K2
C13	B3	K3	R22	C3	K2
C23	C3	*	R23	C3	*
C24	D3	*	R24	D3	*
C30	D2	*	R30	D2	*
C33	C2	*	R31	D2	J2
C40	C3	J3	R32	D2	*
C42	C3	*	R33	C2	*
C50	D4	*	R34	C2	*
C52	D4	*	R37	C2	J3
C53	C4	*	R39	C3	K3
C60	C4	J2	R40	C3	J3
C61	C4	J2	R43	C3	*
C62	C4	J2	R50	D5	*
C73	C1	K2	R51	D4	K2
C84	D1	L2	R53	C4	*
C85	E1	L1	R54	C4	*
C87	E1	K1	R57	C4	K1
C91	F1	L1	R58	C4	K2
C104	E2	J1	R59	C4	J1
C105	E2	*	R60	C4	K2
C106	F2	*	R63	C4	*
C114	E3	J2	R71	C1	K2
C122	E4	*	R72	C1	K1
C129	F4	K3	R73	C1	K2
C133	B5	J3	R77	D1	K2
C134	B5	J3	R79	D1	L2
C135	B5	K2	R80	D1	K2
C139	C5	K3	R81	D2	L2
			R85	E1	K1
CR118	F3	J1	R86	E1	K1
CR119	F3	J1	R87	E1	K1
			R91	F1	K1
J141	F2	J2	R92	E1	K1
J193	A4	K2	R93	E1	K1
J194	A2	J3	R103	E2	*
J241	G2	I2	R105	F2	J1
			R106	F2	*
L2	B1	K4	R108	F2	J1
L4	B1	K4	R109	F2	J1
L6	B2	K4	R114	E3	J2
L94	E2	K1	R115	F3	J1
L103	E2	*	R117	F3	K1
L133	A5	K4	R118	F3	K1
L134	B5	J3	R122	E5	*
			R124	F4	K3
LR113	E3	J2	R125	F4	K3
			R126	E4	*
P102	A1	J4	R127	F4	K3
P102	A5	J4	R133	B5	K4
P134	B5	J3	R135	B5	K3
			R137	C5	K3
Q93	E1	K1	R138	C5	K3
Q94	E1	K1	R139	C5	K3
Q95	E1	K1			
Q104	E2	J1	U21	C3	K2
Q105	F2	J1	U65	D2	J2
Q115	F3	J2	U73A	C1	K2
Q125	F4	K2	U73B	D1	K2
R3	B1	L3	VR85	D1	K1

Partial A25 ASSY also shown on diagrams 20 and 26.

CHASSIS MOUNTED PARTS

CIRCUIT NUMBER	SCHEM LOCATION	BOARD LOCATION	CIRCUIT NUMBER	SCHEM LOCATION	BOARD LOCATION
DL141	G2	CHASSIS			

http://manoman.sqhill.com

VOLTAGE CONDITIONS

The voltages shown were taken with the 7854 controls set as follows: CRT DISPLAY (SCOPE); TRIGGER SOURCE (VERT MODE); VERTICAL MODE (LEFT); HORIZONTAL MODE (B); READOUT INTENSITY (OFF). No plug-in units were installed.

Voltage Conditions. The voltages on the diagram were taken using a digital multimeter with a 10 MΩ input impedance (Tektronix DM 501 Digital Multimeter installed in a TM 501 Power Module or a Tektronix 7D13 Digital Multimeter used with a readout-equipped 7000-Series Oscilloscope.

Selectable Electrical Parts Table
For Diagram 8

Component Number	Reason For Selection	Component Value
A25R32		20
A25R43	See Vertical Amplifier Replacement, Section 3 Maintenance.	See Table 3-5 Section 3 Maintenance
A25R63		
A25C42		4.7 pF
A25C52		1 pF

http://manoman.sghill.com

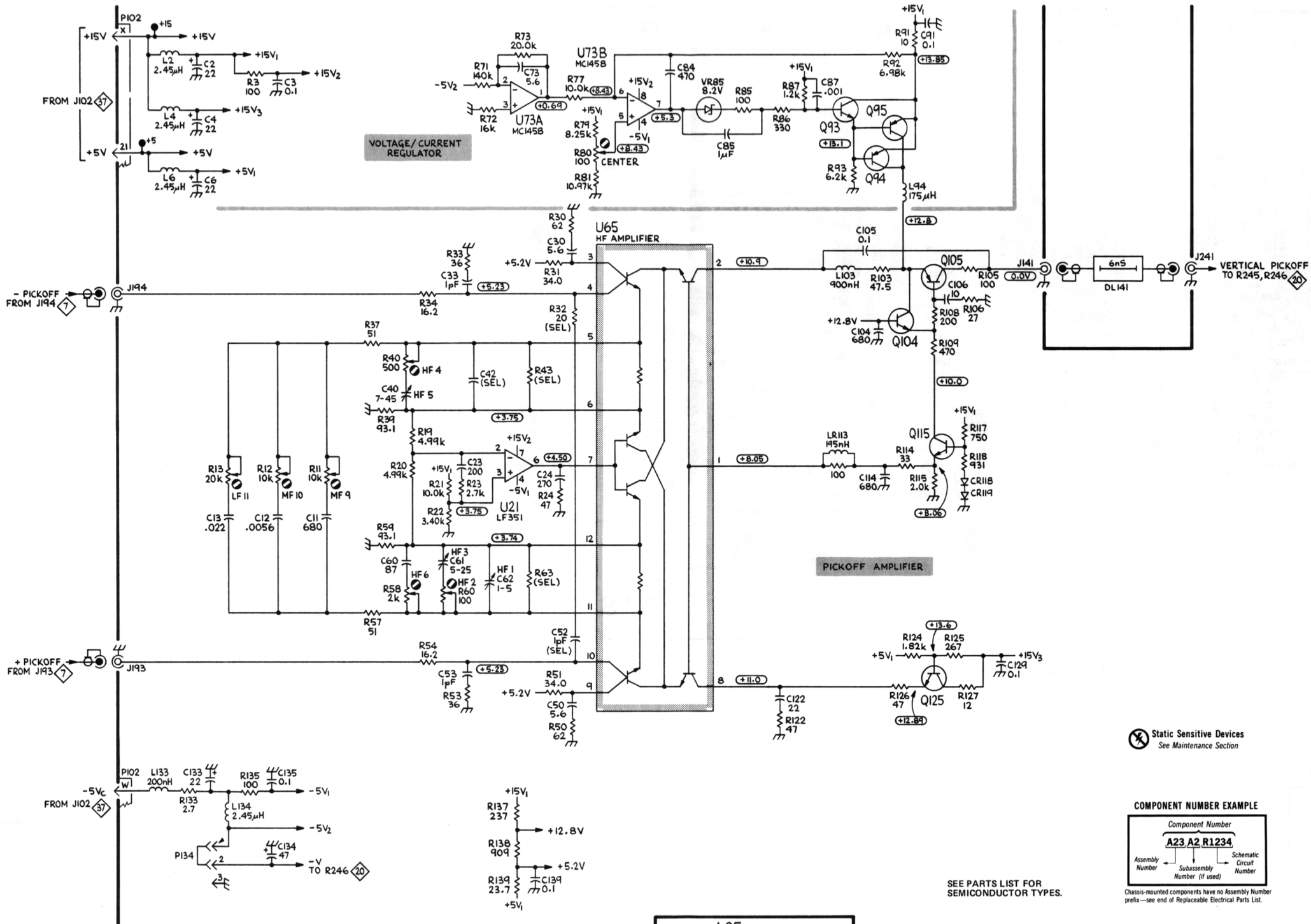

http://manoman.sqhill.com

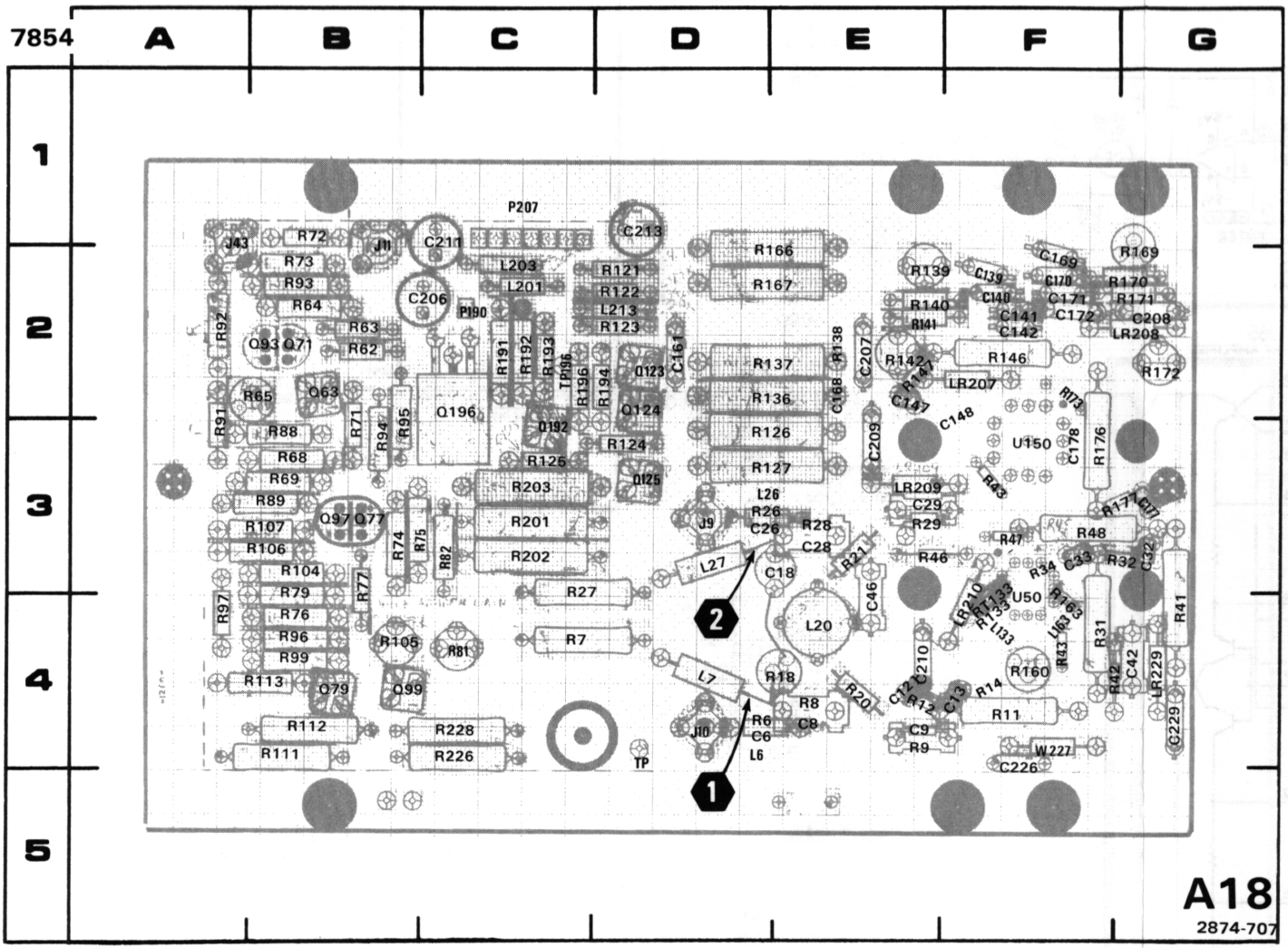

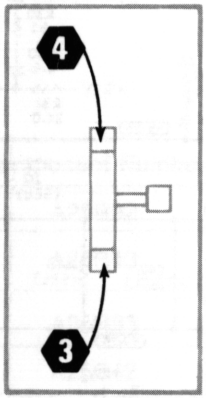

Crt termination.

Figure 7-10. A18—Vertical Amplifier circuit board assembly.

REV A MAR 1981

COMPONENT NUMBER EXAMPLE

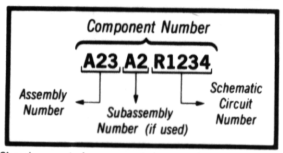

Chassis-mounted components have no Assembly Number prefix—see end of Replaceable Electrical Parts List.

Static Sensitive Devices
See Maintenance Section

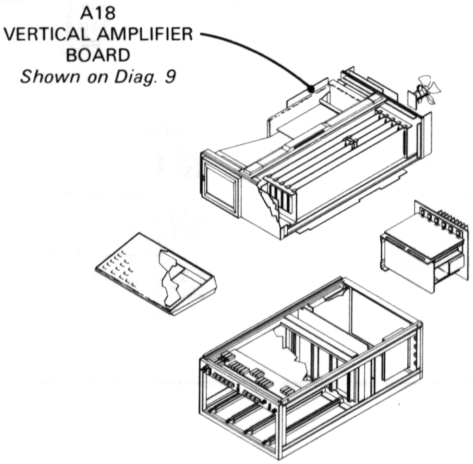

http://manoman.sqhill.com

VERTICAL AMPLIFIER DIAGRAM 9

A18 ASSY

CIRCUIT NUMBER	SCHEM LOCATION	BOARD LOCATION
C6	B1	D4
C8	C1	E4
C9	C1	E4
C12	C1	E4
C13	C1	F4
C18	B2	E3
C26	B2	E3
C28	C2	E3
C29	C2	E3
C32	C2	G3
C33	C2	F3
C42	C2	G4
C46	C2	E4
C139	E1	F2
C140	E1	F2
C141	E1	F2
C142	E1	F2
C147	F1	E2
C148	F1	F3
C161	E2	D2
C168	E2	E2
C169	E2	F2
C170	E2	F2
C171	E2	F2
C172	E2	F2
C177	F3	G3
C178	F2	F3
C206	F4	C2
C207	F4	E2
C208	F4	G2
C209	F4	E3
C210	F4	E4
C211	F4	C2
C213	F4	D1
C226	F4	F5
C229	F4	G4
J9	B2	D3
J10	B1	D4
J11	A3	B2
J43	A4	A2
L6	B1	D4
L7	B1	D4
L20	C2	E4
L26	B2	E3
L27	B2	D3
L133	D1	F4
L163	D2	F4
L201	E3	C2
L203	E4	C2
L213	E5	D2
LR207	F4	F2
LR208	F4	G2
LR209	F4	E3
LR210	F4	F4
LR229	G4	G4
P190	F3	C2
P207	A3	C1
Q63	B4	B2
Q71	B4	B2
Q77	C4	B3
Q79	C3	B4
Q93	B4	B2
Q97	C4	B3
Q99	C4	B4
Q123	D3	D2
Q124	D3	D2
Q125	D3	D3
Q192	F3	C3
Q196	F3	C2
R6	B1	D4
R7	B1	C4
R8	C1	E4
R9	C1	E4
R11	C1	F4
R12	C1	E4
R14	D1	F4
R18	B2	E4
R20	C2	E4
R21	C2	E3
R26	B2	E3
R27	B2	C4
R28	C2	E3
R29	C2	E3
R31	C3	F4
R32	C2	G3
R34	D2	F3
R41	C2	G4
R42	C2	F4
R43	C2	F4
R46	C2	E3
R47	C2	F3
R48	C2	F3
R62	B4	B2
R63	B4	B2
R64	B4	B2
R65	B4	B2
R68	B4	B3
R69	B4	B3
R71	B4	B3
R72	B4	B1
R73	B4	B2
R74	B4	B3
R75	C3	B3
R76	C3	B4
R77	C4	B3
R79	C4	B4
R81	B3	C4
R82	C3	C3
R88	B4	B3
R89	B4	B3
R91	B4	A3
R92	B4	A2
R93	B4	B2
R94	B4	B3
R95	C4	B3
R96	C4	B4
R97	C4	A4
R99	C4	B4
R104	C4	B3
R105	C4	B4
R106	C4	B3
R107	C4	B3
R111	C4	B4
R112	C4	B4
R113	C4	B4
R121	D3	D2
R122	D3	D2
R123	D3	D2
R124	D3	D3
R125	D3	C3
R126	D3	E3
R127	D3	E3
R133	D1	F4
R136	E1	E2
R137	E2	E2
R138	E1	E2
R139	E1	E2
R140	E1	E2
R141	E1	C2
R142	E1	E2
R143	F1	F3
R146	E1	F2
R147	F1	E2
R160	D2	F4
R163	D2	F4
R166	E1	E2
R167	E1	E2
R169	E1	G2
R170	E1	G2
R171	E1	G2
R172	E1	G2
R173	F2	F2
R176	E1	F3
R177	F3	G3
R191	F3	C2
R192	F3	C2
R193	F3	C2
R194	F3	D2
R196	F3	C2
R201	F4	C3
R202	F4	C3
R203	F4	C3
R226	F4	C4
R228	F4	C4
RT133	D1	F4
TP196	F3	C2
U50	D1	F4
U150	F1	F3
W227	G4	F4

CHASSIS MOUNTED PARTS

CIRCUIT NUMBER	SCHEM LOCATION	BOARD LOCATION
C83	G3	CHASSIS
L81	G1	CHASSIS
L82	G2	CHASSIS
R81	G1	CHASSIS
R82	G2	CHASSIS
R83	G1	CHASSIS

http://manoman.sqhill.com

VOLTAGE AND WAVEFORM CONDITIONS

The voltages and waveforms were taken with the 7854 controls set as follows: CRT DISPLAY (SCOPE); TRIGGER SOURCE (VERT MODE); VERTICAL MODE (LEFT); HORIZONTAL MODE (B); READOUT INTENSITY (OFF). No plug-in units were installed.

Voltage Conditions. The voltages on the diagram were taken using a digital multimeter with a 10 MΩ input impedance (Tektronix DM 501 Digital Multimeter installed in a TM 501 Power Module or a Tektronix 7D13 Digital Multimeter used with a readout-equipped 7000-Series Oscilloscope).

Waveform Conditions. The waveforms shown below were obtained using a test oscilloscope system with 10 MΩ input impedance, at least 60 MHz bandwidth and 10X probe (Tektronix 7603 Oscilloscope, 7B92 Time Base, 7A13 Differential Comparator and P6063A Probe).

A Calibration Fixture (Tektronix 067-0587-01) with controls set as follows: REP RATE (1 KHz); STEP RESPONSE (+); AMPLITUDE (adjust to 6 divisions) was installed in the LEFT VERT compartment of the 7854 and a 7B80 Time Base with controls set as follows: TRIGGERING (P-P AUTO, AC, INT); TIME/DIV (1 ms) was installed in the B HORIZ compartment of the 7854.

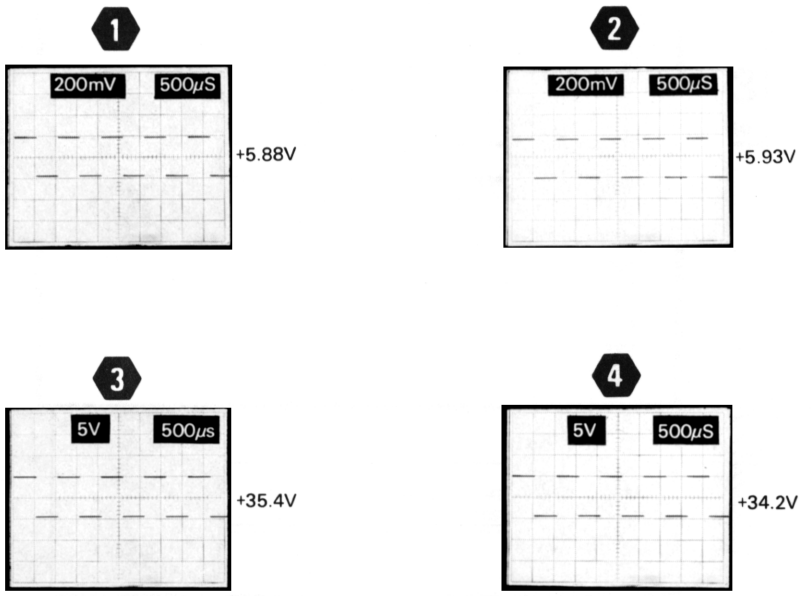

Selectable Electrical Parts Table
For Diagram 9

Component Number	Reason For Selection	Component Value
A18R43 A18R47 A18R143 A18R173	See Vertical Amplifier Replacement, Section 3 Maintenance.	See Table 3-5, Section 3 Maintenance.
A18R138 A18R140 A18R141 A18R170 A18R171 A18C168	Thermal and high frequency Compensation.	±50% of value.
A18L26 A18L6 A18L133 A18L163	Bandwidth	Maximum wire length on inch.

http://manuals.tpgill.com

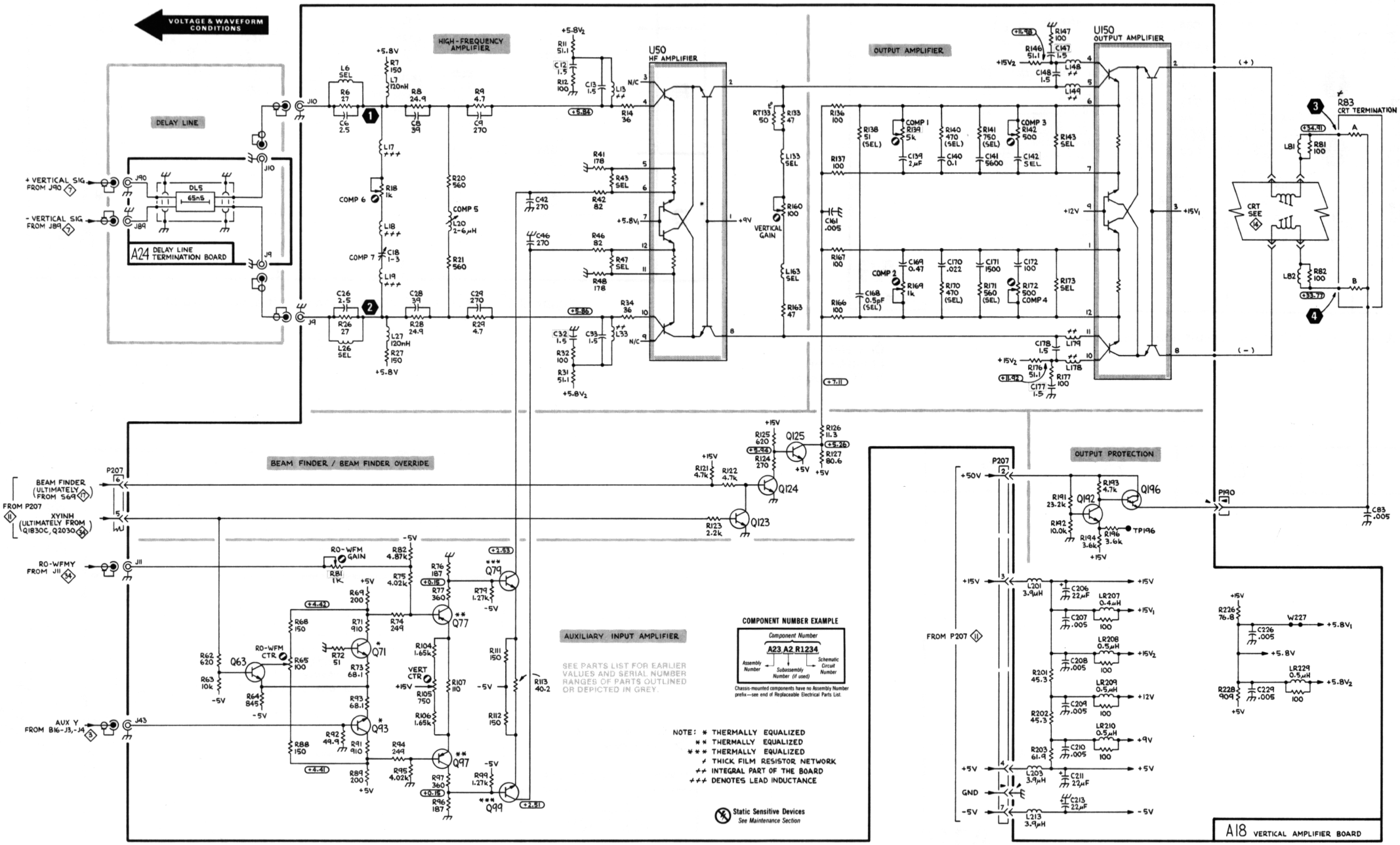

http://manoman.sqhill.com

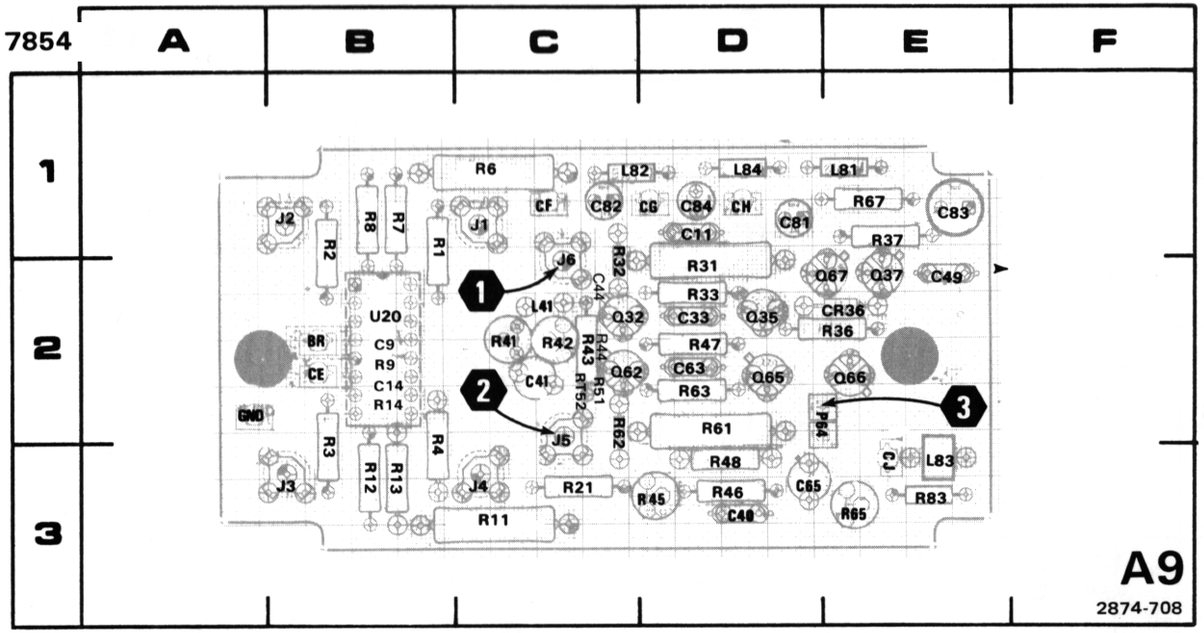

Figure 7-11. A9—Horizontal Channel circuit board assembly.

*C44, R44 Located on back of board.

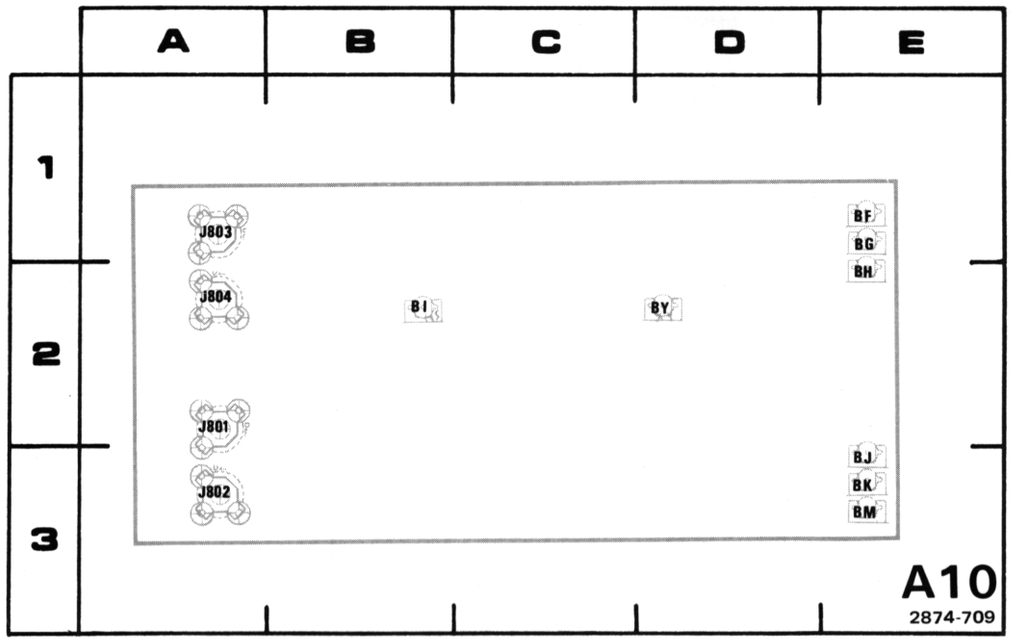

Figure 7-12. A10—Horizontal Interconnect circuit board assembly. REV JUL 1981

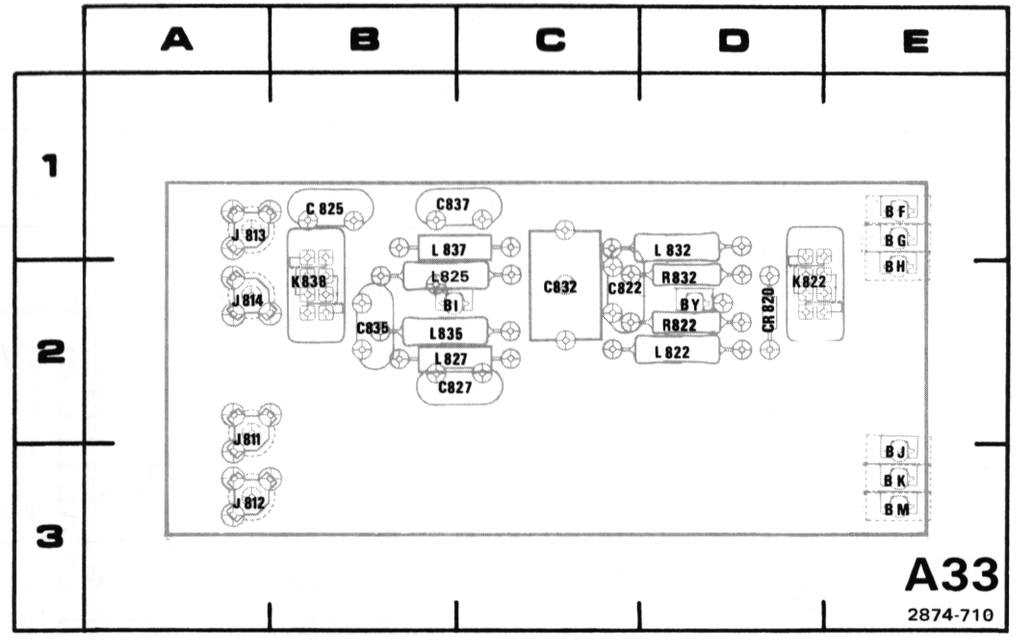

Figure 7-13. A33—X-Y Compensation circuit board assembly.

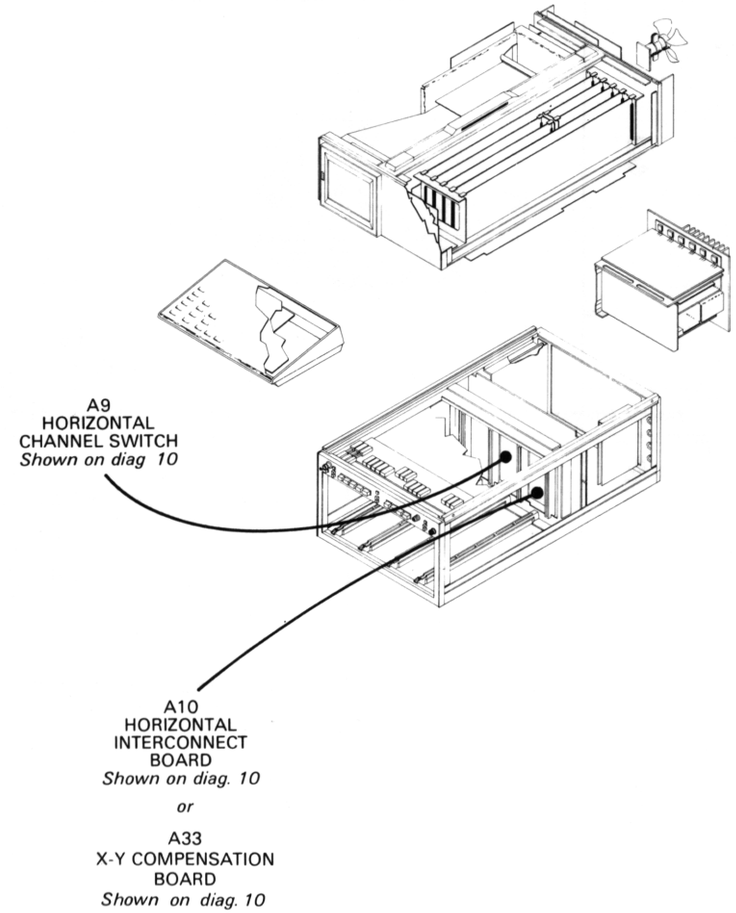

http://manoman.sqhill.com

HORIZ. CHANNEL SWITCH AND PICKOFF AMPLIFIER DIAGRAM 10

A9 ASSY

CIRCUIT NUMBER	SCHEM LOCATION	BOARD LOCATION	CIRCUIT NUMBER	SCHEM LOCATION	BOARD LOCATION
C9	D1	B2	R1	C1	B1
C11	D2	D1	R2	C2	B1
C14	D2	B2	R3	C2	B3
C33	E2	D2	R4	C2	B3
C40	F1	D3	R6	D1	C1
C41	F2	C2	R7	D1	B1
C44	F2	*	R8	D1	B1
C49	E3	E2	R9	D1	B2
C63	F2	D2	R11	D2	C3
C65	F3	D3	R12	D2	B3
C81	D3	D1	R13	D2	B3
C82	D3	C1	R14	D2	B2
C83	D3	E1	R21	D3	C3
C84	D3	D1	R31	E1	D2
			R32	E2	C2
CR36	E3	E2	R33	E2	D2
J1	C1	C1	R36	E3	D2
J2	C2	B1	R37	E3	E1
J3	C2	B3	R41	E2	C2
* J4	C2	C3	R42	E2	C2
J5	F1	C2	R43	F2	C2
J6	F1	C2	R44	F2	*
			R45	F2	D3
L41	E2	C2	R46	F2	D3
L81	C3	E1	R47	E2	D2
L82	C3	C1	R48	E2	D3
L83	C3	E3	R51	F2	G2
L84	C3	D1	R61	F1	D2
			R62	F2	C2
P64	F2	D2	R63	F2	D2
			R65	F3	E3
Q32	E2	C2	R67	F3	E1
Q35	E2	D2	R83	D3	E3
Q37	E3	E2			
Q62	F2	C2	RT52	F2	C2
Q65	F2	D2			
Q66	F3	E2	U20	D1	B2
Q67	F3	E2			

A10 ASSY

CIRCUIT NUMBER	SCHEM LOCATION	BOARD LOCATION	CIRCUIT NUMBER	SCHEM LOCATION	BOARD LOCATION
J801	C1	A2	J803	C2	A1
J802	C2	A3	J804	C2	A2

A33 ASSY

CIRCUIT NUMBER	SCHEM LOCATION	BOARD LOCATION	CIRCUIT NUMBER	SCHEM LOCATION	BOARD LOCATION
C822	B4	C2	K822	B4	D2
C825	C4	B1	K838	C4	B2
C827	B5	B2			
C832	B4	C2	L822	B5	D2
C835	C4	B2	L825	B4	B2
C837	B4	B1	L827	B5	B2
			L832	B4	D1
CR820	B4	D2	L835	B4	B2
			L837	B4	B1
J811	C4	A2			
J812	C4	A3	R822	B5	D2
J813	C4	A1	R832	B4	D2
J814	C5	A2			

CHASSIS MOUNTED PARTS

CIRCUIT NUMBER	SCHEM LOCATION	BOARD LOCATION	CIRCUIT NUMBER	SCHEM LOCATION	BOARD LOCATION
DL64	G3	CHASSIS	E6	G1	CHASSIS
E5	G1	CHASSIS			

***Located on back of board.**

http://manoman.sqhill.com

VOLTAGE AND WAVEFORM CONDITIONS

The voltage and waveforms were taken with the 7854 controls set as follows: CRT DISPLAY (SCOPE); TRIGGER SOURCE (VERT MODE); VERTICAL MODE (LEFT); HORIZONTAL MODE (B); READOUT INTENSITY (OFF). No plug-in units were installed.

Voltage Conditions. The voltages on the diagram were taken using a digital multimeter with a 10 MΩ input impedance (Tektronix DM 501 Digital Multimeter installed in a TM 501 Power Module or a Tektronix 7D13 Digital Multimeter used with a readout-equipped 7000-Series Oscilloscope).

Waveform Conditions. The waveforms shown below were obtained using a test oscilloscope system with 10 MΩ input impedance, at least 60 MHz bandwidth and 10X probe (Tektronix 7603 Oscilloscope, 7B92 Time Base, 7A13 Differential Comparator and P6063A Probe).

A Calibration Fixture (Tektronix 067-0587-01) with controls set as follows: REP RATE (1 KHz); STEP RESPONSE (+); AMPLITUDE (adjust to 6 divisions) was installed in the LEFT VERT compartment of the 7854 and a 7B80 Time Base with controls set as follows: TRIGGERING (P-P AUTO, AC, INT); TIME/DIV (1 ms) was installed in the B Horizontal compartment of the 7854.

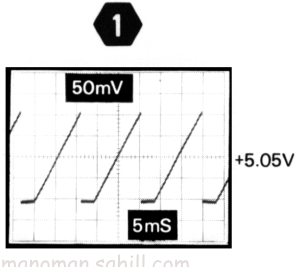

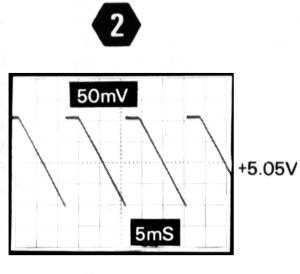

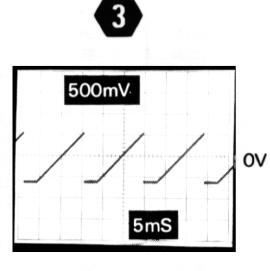

http://manoman.sqhill.com

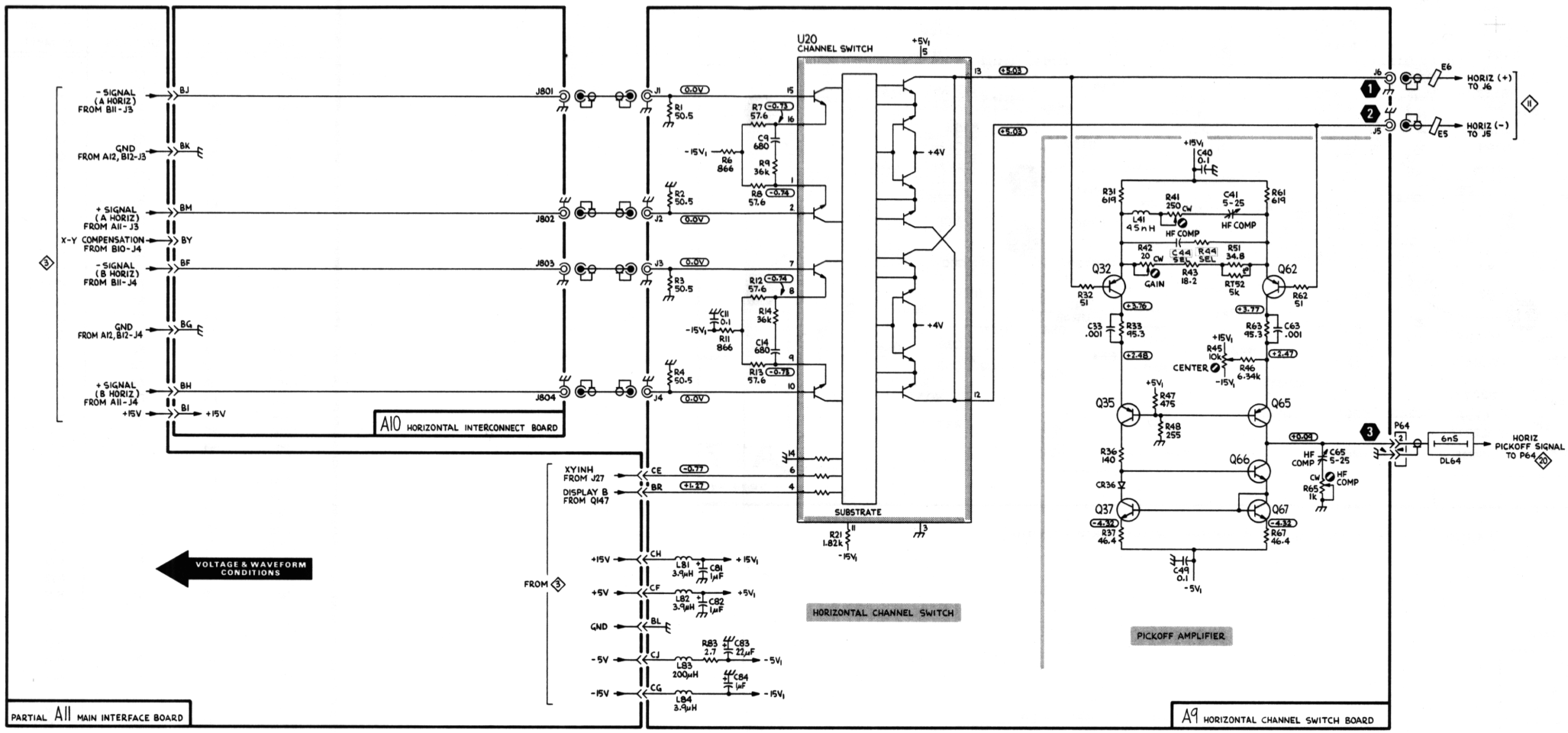

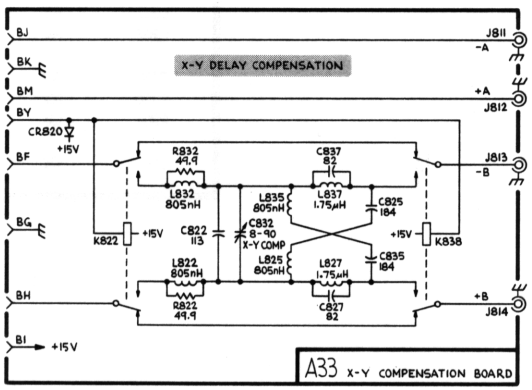

NOTE:
IN THE 7854 OPTION 02, THE A33 X-Y COMPENSATION BOARD REPLACES THE A10 HORIZONTAL INTERCONNECT BOARD

SEE PARTS LIST FOR EARLIER VALUES AND SERIAL NUMBER RANGES OF PARTS OUTLINED OR DEPICTED IN GREY.

Static Sensitive Devices
See Maintenance Section

COMPONENT NUMBER EXAMPLE

Component Number: A23 A2 R1234
(Assembly Number · Subassembly Number (if used) · Schematic Circuit Number)

Chassis-mounted components have no Assembly Number prefix—see end of Replaceable Electrical Parts List.

http://manoman.ehld.com

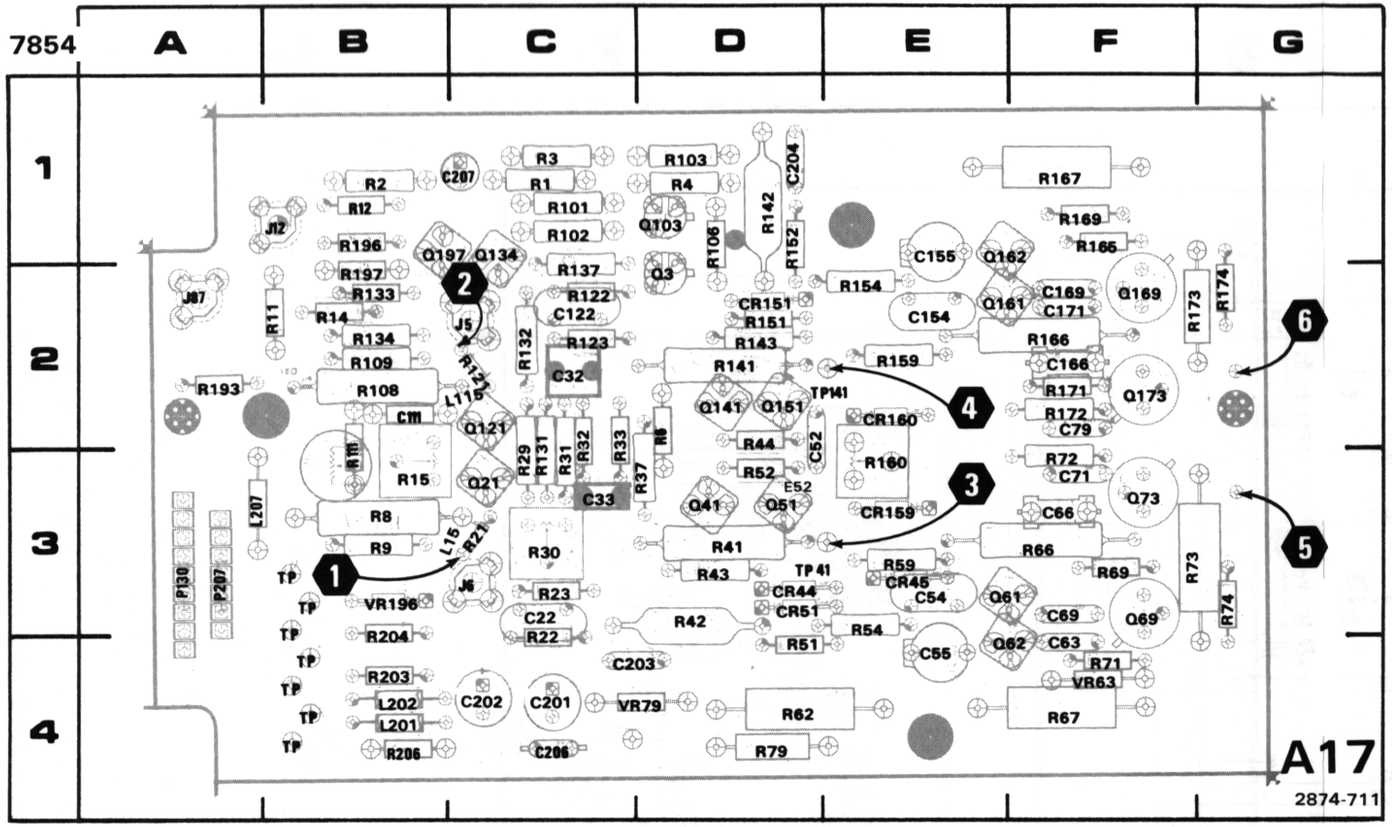

REV A MAR 1981

Figure 7-14. A17—Horizontal Amplifier circuit board assembly.

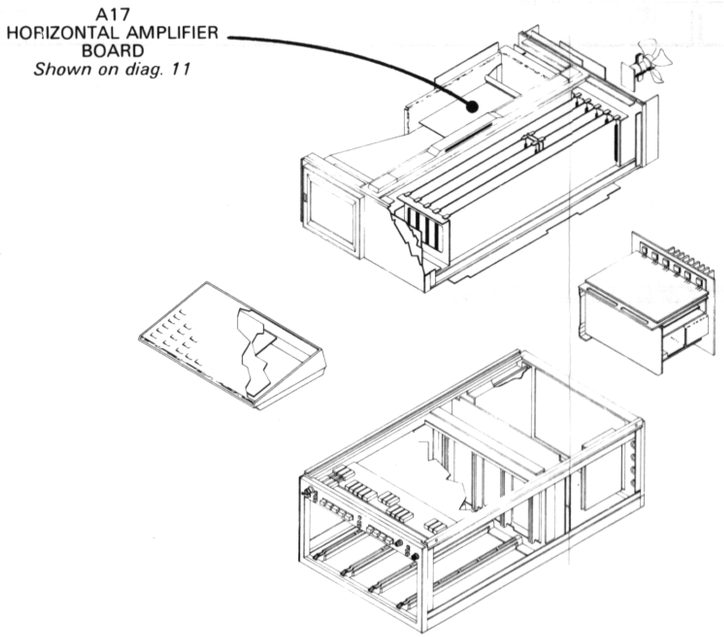

HORIZONTAL AMPLIFIER DIAGRAM 11

A17 ASSY

CIRCUIT NUMBER	SCHEM LOCATION	BOARD LOCATION
C22	B1	C3
C32	B2	C2
C33	B2	C3
C52	D2	D2
C54	D2	E3
C55	D2	E4
C63	E1	F4
C66	E1	F3
C69	E1	F3
C71	E2	F3
C79	E2	F2
C111	B2	B2
C122	B3	C2
C154	D2	E2
C155	D2	E1
C166	E3	F2
C169	E3	F2
C171	E2	F2
C201	B3	C4
C202	B3	C4
C203	E3	D4
C204	E4	D1
C206	B3	C4
C207	B4	C1
CR44	D1	D3
CR45	D1	E3
CR51	D2	D3
CR151	D2	D2
CR159	E2	E3
CR160	E2	E2
E52	D2	D3
J5	A3	C2
J6	A1	C3
J12	A1	B1
J87	A3	A2
L15	B1	C3
L115	B2	C2
L201	A3	B4
L202	A3	B4
L207	A4	A3
P130	A3	A3
P130	E3	A3
P207	C3	A3
Q3	C2	D2
Q21	B1	C3
Q41	D1	D3
Q51	D2	D3
Q61	E1	F3
Q62	E1	F4
Q69	E1	F3
Q73	F2	F3
Q103	C2	D1
Q121	B3	C2
Q134	C2	C1
Q141	D3	D2
Q151	D2	D2
Q161	E3	E2
Q162	E2	E1
Q169	E3	F2
Q173	F2	F2
Q197	C3	C1
R1	C2	C1
R2	C1	B1
R3	C2	C1
R4	C2	D1
R6	C1	D2
R8	A1	B3
R9	A2	B3
R11	C1	B2
R12	C1	B1
R14	B2	B2
R15	B2	B3
R21	B1	C3
R22	B1	C4
R23	B1	C3
R29	B2	C3
R30	B2	C3
R31	B2	C3
R32	B2	C3
R33	B2	C3
R37	C1	D3
R41	D1	D3
R42	D1	D3
R43	D1	D3
R44	D2	D2
R51	D2	D4
R52	D1	D3
R54	D2	E3
R59	E2	E3
R62	E1	D4
R66	E1	F3
R67	E1	F4
R69	E1	F3
R71	E1	F4
R72	E1	F3
R73	E1	F3
R74	F1	G3
R79	F2	D4
R101	C2	C1
R102	C2	C1
R103	C2	D1
R106	C3	D1
R108	A2	B2
R109	A2	B2
R111	B2	B3
R121	B3	C2
R122	B3	C2
R123	B3	C2
R131	C2	C3
R132	C2	C2
R133	C2	B2
R134	C2	B2
R137	C3	C2
R141	D2	D2
R142	D2	D1
R143	D3	D2
R151	D2	D2
R152	D2	D1
R154	D2	E2
R159	E2	E2
R160	E2	E3
R165	E3	F1
R166	E2	F2
R167	E2	F1
R169	E2	F1
R171	E2	F2
R172	E2	F2
R173	E2	F2
R174	F2	G2
R193	A3	A2
R196	B3	B1
R197	C3	B2
R203	E3	B4
R204	E4	B4
R206	A3	B4
TP41	D1	D3
TP141	D3	E2
VR63	E1	F4
VR79	F2	D4
VR196	B3	B3

http://manoman.sqhill.com

VOLTAGE AND WAVEFORM CONDITIONS

The voltages and waveforms were taken with the 7854 controls set as follows: CRT DISPLAY (SCOPE); TRIGGER SOURCE (VERT MODE); VERTICAL MODE (LEFT); HORIZONTAL MODE (B); READOUT INTENSITY (OFF). No plug-in units were installed.

Voltage Conditions. The voltages on the diagram were taken using a digital multimeter with a 10 MΩ input impedance (Tektronix DM 501 Digital Multimeter installed in a TM 501 Power Module or a Tektronix 7D13 Digital Multimeter used with a readout-equipped 7000-Series Oscilloscope).

Waveform Conditions. The waveforms shown below were obtained using a test oscilloscope system with 10 MΩ input impedance, at least 60 MHz bandwidth and 10X probe (Tektronix 7603 Oscilloscope, 7B92 Time Base, 7A13 Differential Comparator and P6063A Probe).

A Calibration Fixture (Tektronix 067-0587-01) with controls set as follows: REP RATE (1 KHz); STEP RESPONSE (+); AMPLITUDE (adjust to 6 divisions) was installed in the LEFT VERT compartment of the 7854 and a 7B80 Time Base with controls set as follows: TRIGGERING (P-P AUTO, AC, INT); TIME/DIV (1 ms) was installed in the B HORIZ compartment of the 7854.

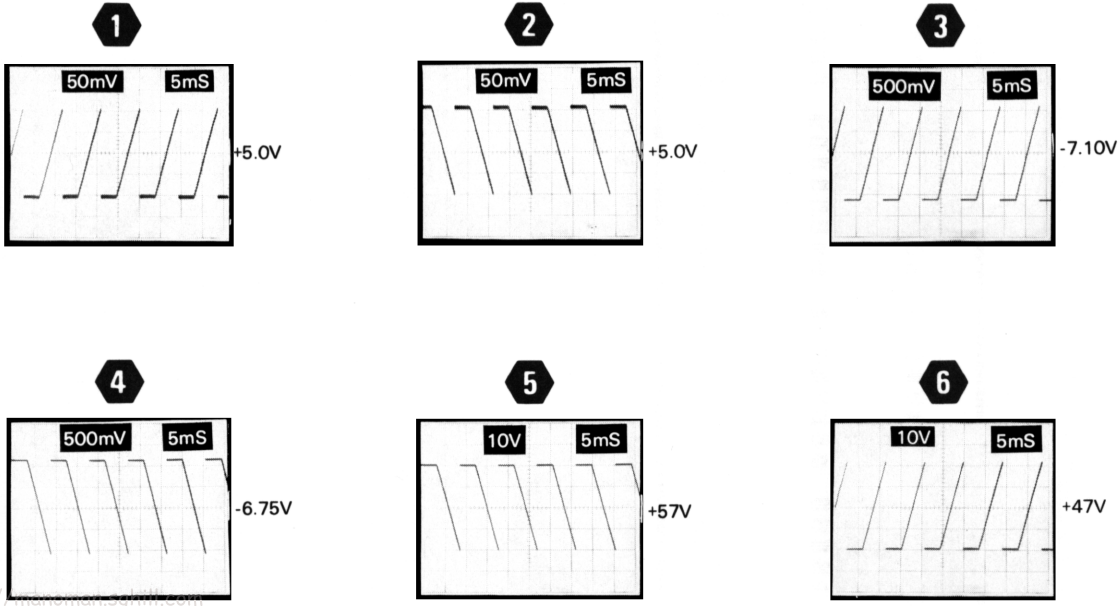

http://www.manuals.com

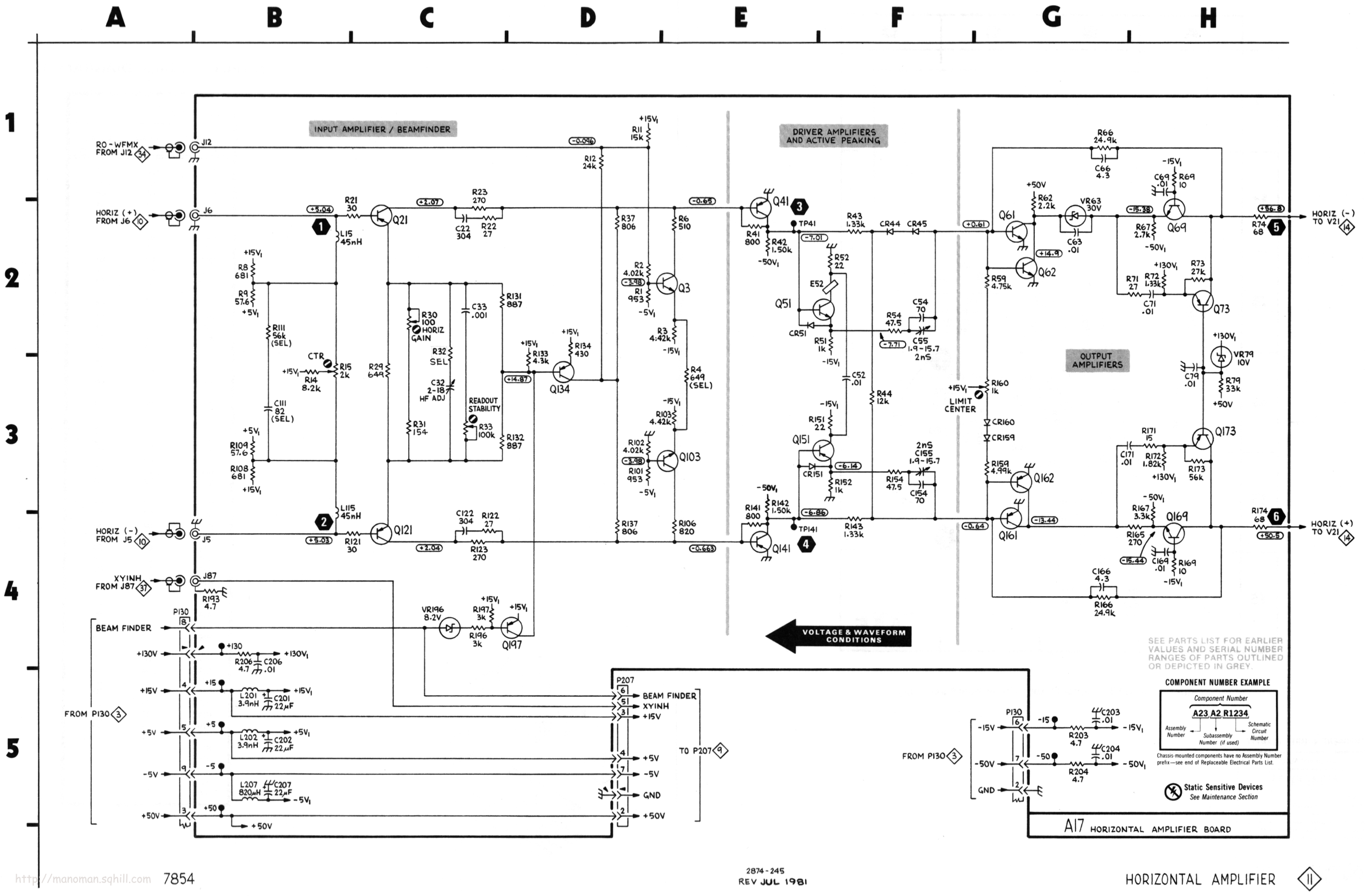

http://manoman.sghill.com

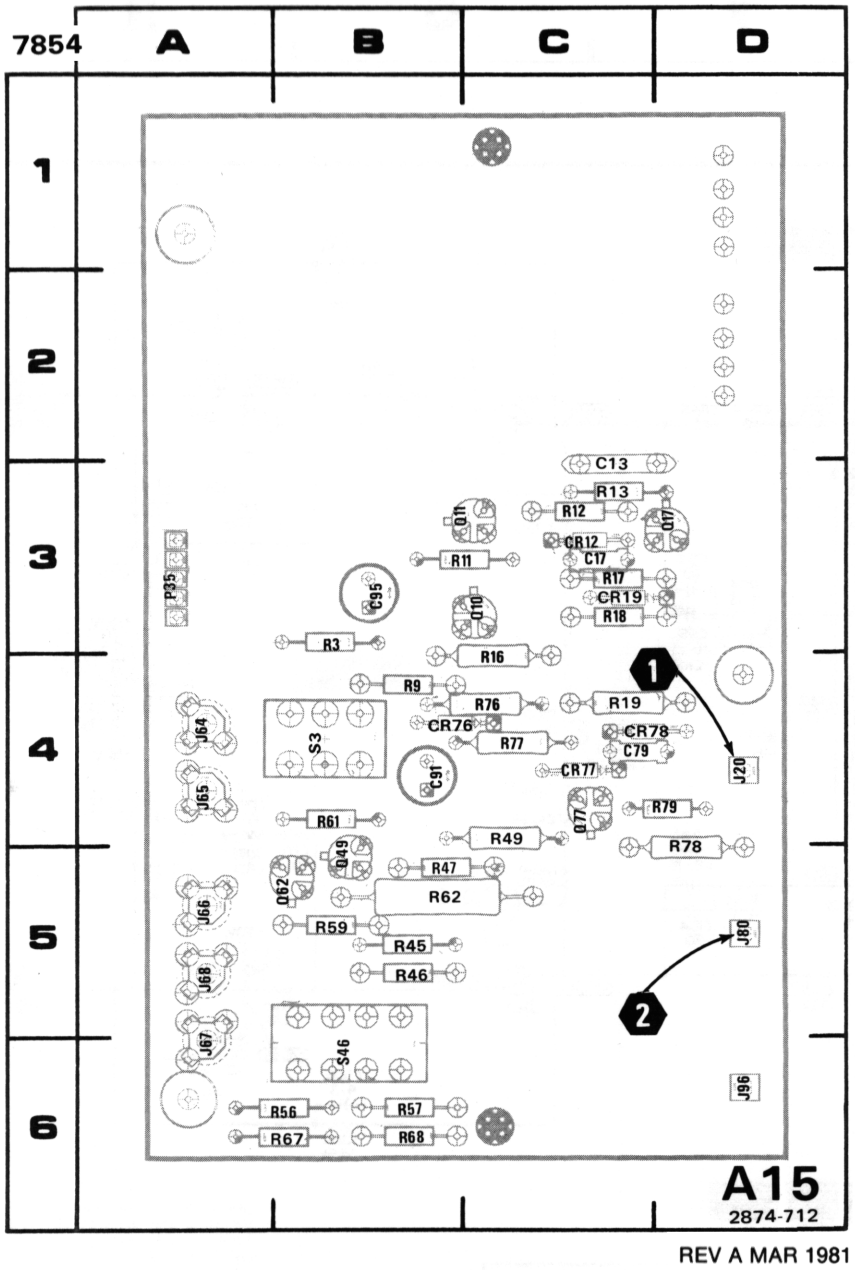

Figure 7-15. A15—Signal Output circuit board assembly.

A15 ASSY		
CIRCUIT NUMBER	SCHEM LOCATION	BOARD LOCATION
C13	E2	C3
C17	E2	C3
C79	F2	C4
C91	C4	B4
C95	C5	B3
CR12	E2	C3
CR19	E2	C3
CR76	E3	B4
CR77	E2	C4
CR78	E2	C4
J20	F2	D4
J64	C2	A4
J65	C2	A4
J66	C2	A5
J67	C3	A6
J68	C3	A5
J80	F2	D5
J96	F5	D6
P35	B4	A3
Q10	D2	C3
Q11	D2	B3
Q17	E2	D3
Q49	D3	B5
Q62	D3	B5
Q77	E2	C4
R3	C2	B3
R9	D2	C2
R11	D2	B3
R12	D2	C3
R13	E1	C3
R16	D1	C4
R17	E2	C3
R18	E2	C3
R19	F2	C4
R45	C2	B5
R46	C3	B5
R47	D2	B5
R49	D2	C4
R56	C3	B6
R57	C3	B6
R59	D3	B5
R61	D3	B4
R62	D3	B5
R67	C3	B6
R68	C3	B6
R76	E3	C4
R77	E3	C4
R78	E2	D4
R79	F2	D4
S3	C2	B4
S46	C3	B6

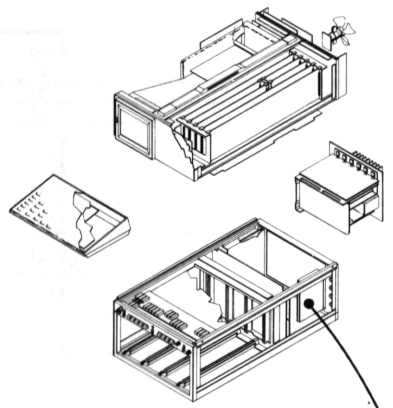

A15
SIGNAL OUTPUT
BOARD
Shown on diag. 12

http://manoman.sqhill.com

VOLTAGE AND WAVEFORM CONDITIONS

The voltages and waveforms were taken with the 7854 controls set as follows: CRT DISPLAY (SCOPE); TRIGGER SOURCE (VERT MODE); VERTICAL MODE (LEFT); HORIZONTAL MODE (B); READOUT INTENSITY (OFF). No plug-in units were installed.

Voltage Conditions. The voltages on the diagram were taken using a digital multimeter with a 10 MΩ input impedance (Tektronix DM 501 Digital Multimeter installed in a TM 501 Power Module or a Tektronix 7D13 Digital Multimeter used with a readout-equipped 7000-Series Oscilloscope).

Waveform Conditions. The waveforms shown below were obtained using a test oscilloscope system with 10 MΩ input impedance, at least 60 MHz bandwidth and 10X probe (Tektronix 7603 Oscilloscope, 7B92 Time Base, 7A13 Differential Comparator and P6063A Probe).

A Calibration Fixture (Tektronix 067-0587-01) with controls set as follows: REP RATE (1 KHz); STEP RESPONSE (+); AMPLITUDE (adjust to 6 divisions) was installed in the LEFT VERT compartment of the 7854 and a 7B80 Time Base with controls set as follows: TRIGGERING (P-P AUTO, AC, INT); TIME/DIV (1 ms) was installed in the B HORIZ compartment of the 7854.

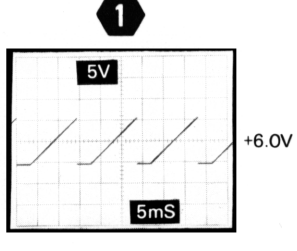

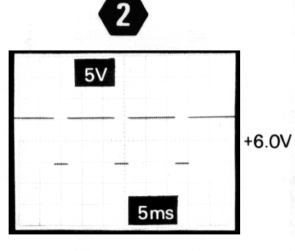

http://manoman.sqhill.com

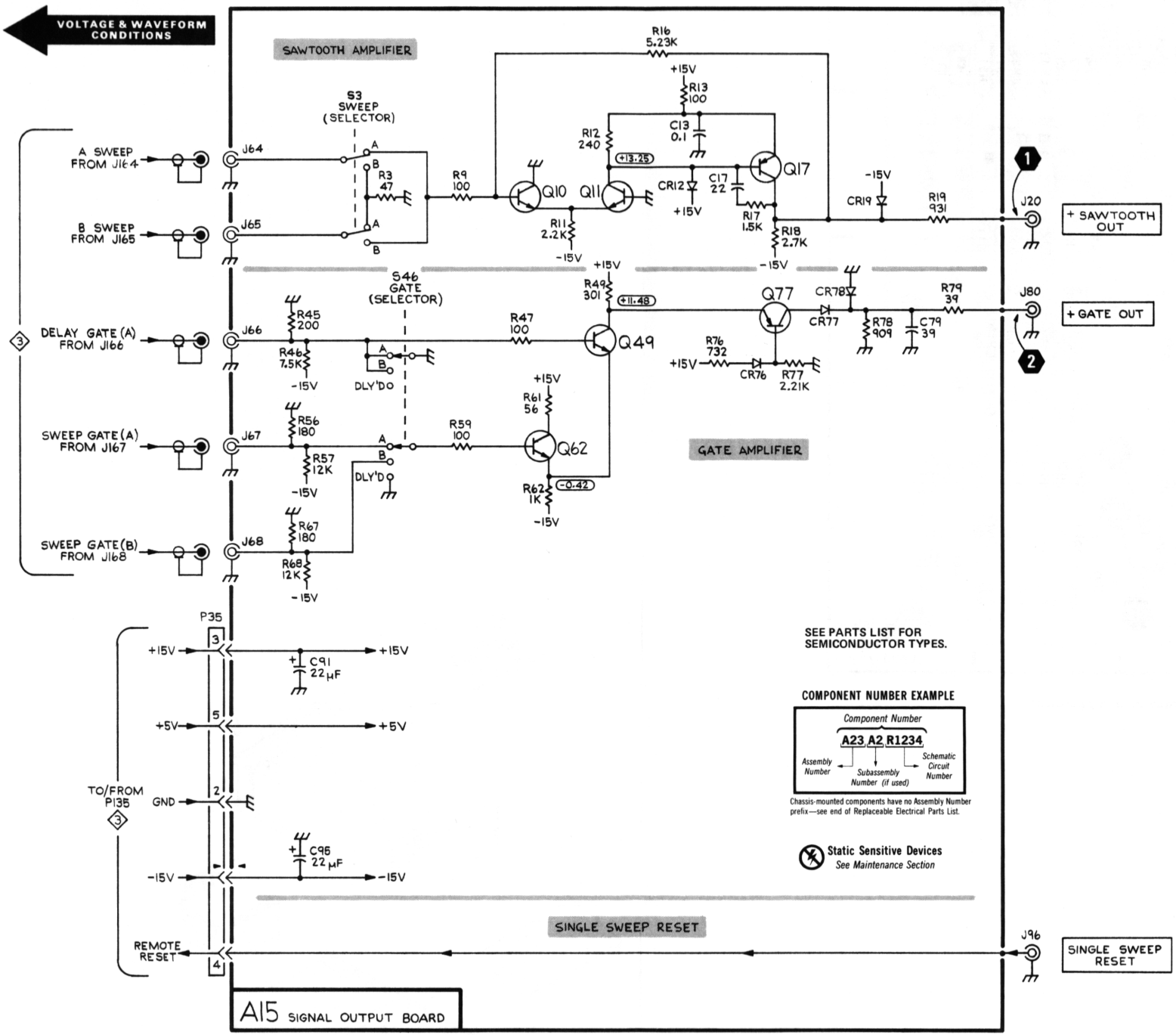

http://manoman.sqhill.com

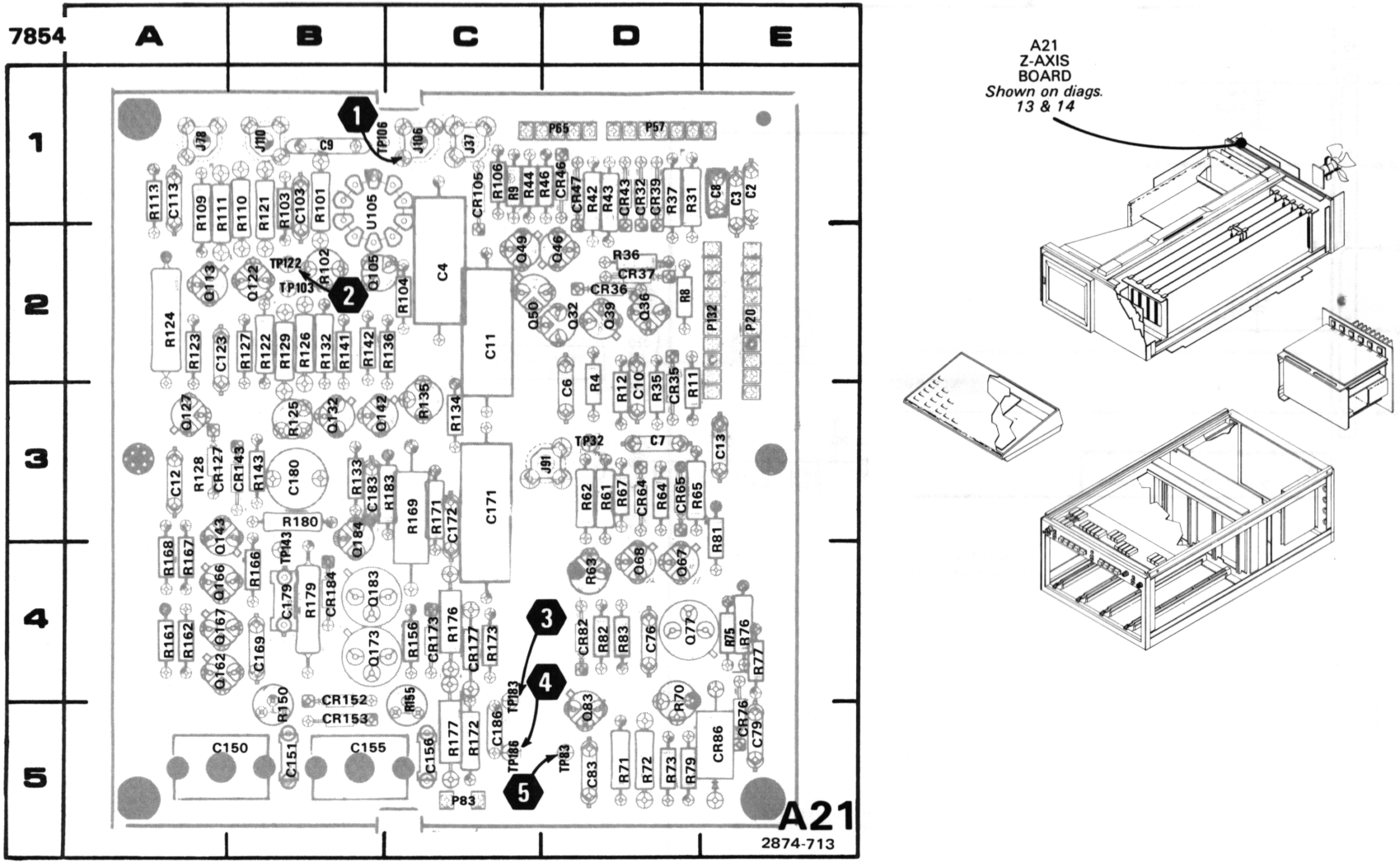

REV A MAR 1981

Figure 7-16. A21—Z-Axis circuit board assembly.

http://manoman.sqhill.com

Z-AXIS AND FOCUS AMPLIFIER DIAGRAM 13

A21 ASSY

CIRCUIT NUMBER	SCHEM LOCATION	BOARD LOCATION
C2	B1	E1
C3	B1	E1
C4	B1	C2
C6	B1	D3
C7	B2	D3
C8	B2	E1
C9	B2	B1
C10	B2	D3
C11	B2	C2
C12	B2	A3
C13	B2	E3
C76	E2	D4
C79	F2	E5
C83	F2	D5
C103	B3	B1
C113	B4	A1
C123	B4	A2
C150	D3	B5
C151	D3	B5
C155	D3	B5
C156	D3	C5
C169	E4	B4
C171	E4	C3
C172	E4	C3
C179	E4	B4
C180	E4	B3
C183	E4	B3
C186	F4	C5
CR32	D1	D1
CR35	D2	D3
CR36	D2	D2
CR37	D2	D2
CR39	D2	D1
CR43	D2	D1
CR46	D2	D1
CR47	D2	D1
CR64	E1	D3
CR65	E2	D3
CR76	E2	E5
CR82	E2	D4
CR86	F2	E5
CR105	B3	C1
CR127	C4	A3
CR143	D4	B3
CR152	D3	B4
CR153	D3	B5
CR173	E4	C4
CR177	E4	C4
CR184	F4	B4
J37	D1	C1
J78	A3	A1
J91	A4	D3
J106	C3	C1
J110	A3	B1
P20	C1	E2
P57	A2	D1
P57	C1	D1
P57	C2	D1
P65	C2	D1
P65	C3	D1
P83	F4	C5
P132	C2	E2
Q32	D1	D2
Q36	D2	D2
Q39	D2	D2
Q46	D2	D2
Q49	D2	C2
Q50	D2	C2
Q67	E1	D4
Q68	E1	D4
Q77	F2	D4
Q83	F2	D5
Q105	B3	B2
Q113	B3	A2
Q122	B3	B2
Q127	C4	A3
Q132	C3	B3
Q142	C4	B3
Q143	D4	A4
Q162	E3	A4
Q166	E4	A4
Q167	E4	A4
Q173	F4	B4
Q183	F4	B4
Q184	F4	B4
R4	A1	D3
R8	B2	D2
R9	B2	C1
R11	B2	D3
R12	B2	D3
R31	D1	D1
R35	D2	D3
R36	D2	D2
R37	D2	D1
R42	D2	D1
R43	D2	D1
R44	D2	C1
R46	D2	C1
R61	E1	D3
R62	E1	D3
R63	E2	D4
R64	E2	D3
R65	E2	D3
R67	E1	D3
R70	E1	D5
R71	F1	D5
R72	F1	D5
R73	F1	D5
R75	E2	E4
R76	E2	E4
R77	F2	E4
R79	F2	D5
R81	E2	E3
R82	E2	D4
R83	E2	D4
R101	B3	B1
R102	B3	B2
R103	B3	B1
R104	B3	C2
R106	B3	C1
R109	B3	A1
R110	B3	B1
R111	B3	A1
R113	B4	A1
R121	B3	B1
R122	B3	B2
R123	B4	A2
R124	B4	A2
R125	C3	B3
R126	C3	B2
R127	C4	B2
R128	C4	A3
R129	C3	B2
R132	C3	B2
R133	C3	B3
R134	C3	C3
R135	C3	C3
R136	C3	B2
R141	C4	B2
R142	C4	B2
R143	D3	B3
R150	D3	B5
R155	D3	C3
R156	D3	C3
R161	E3	A4
R162	E3	A4
R166	D4	B4
R167	E4	A4
R168	E4	A4
R169	F4	C3
R171	E4	C3
R172	E4	C5
R173	E4	C3
R176	F4	C3
R177	F4	C5
R179	E4	B4
R180	E4	B3
R183	E4	C3
TP32	E1	D3
TP83	F2	D5
TP103	B3	B2
TP106	B3	B1
TP122	B3	B2
TP143	D3	B4
TP183	F4	C3
TP186	F4	C5
U105	B3	B1

http://manoman.sqhill.com

VOLTAGE AND WAVEFORM CONDITIONS

The voltages and waveforms shown were obtained with the 7854 controls set as follows: CRT DISPLAY (SCOPE); TRIGGER SOURCE (VERT MODE); VERTICAL MODE (LEFT); HORIZONTAL MODE (B); READOUT INTENSITY (OFF).

Voltage Conditions. The voltages were taken with a digital multimeter with a 10MΩ input impedance (Tektronix DM 501 Digital Multimeter installed in a TM 501 Power Module or Tektronix 7D13 Digital Multimeter used with a readout-equipped 7000-Series Oscilloscope).

Waveform Conditions. The waveforms shown below were obtained using a test oscilloscope system with 10 MΩ input impedance, at least 60 MHz bandwidth and 10X probe (Tektronix 7603 Oscilloscope, 7B92 Time Base, 7A13 Differential Comparator and P6063A Probe).

Waveform 1 conditions: 7B80 Time Base with controls set as follows: TIME/DIV (1 ms); TRIGGERING (P-P AUTO, AC, INT) was installed in the B HORIZ compartment of the 7854. 7854 conditions: A and B INTENSITY midrange.

Waveform 2 conditions: Same as 1 above except B INTENSITY fully CCW.

Waveform 3 conditions: Same as 1 above except 7B80 Time Base set for 2 μs/div.

Waveform 4 conditions: Same as 1 above except 7B80 Time Base set for 2 μs/div. A Calibration Fixture (Tektronix 067-0587-01 with controls set as follows: REP RATE (100 KHz); STEP RESP (+) was installed in the LEFT VERT compartment of the 7854.

Waveform 5 conditions: Same as 1 above except 7854 in CHOP mode, A INTENSITY (CCW) 7B80 Time Base set for 1 μs/div.

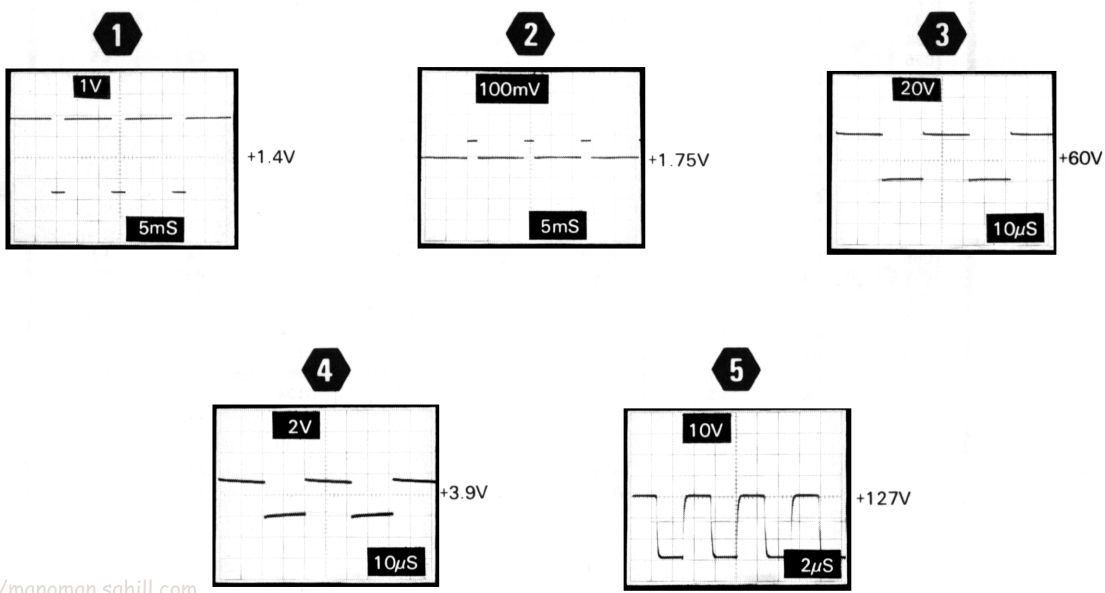

http://manoman.sghill.com

A B C D E F

1 2 3 4

VOLTAGE & WAVEFORM CONDITIONS

AUTO-FOCUS CHANNEL SWITCH AND AMPLIFIER

Z-AXIS AMPLIFIER

COMPONENT NUMBER EXAMPLE

Component Number: A23 A2 R1234 (Assembly Number / Subassembly Number (if used) / Schematic Circuit Number)

Chassis-mounted components have no Assembly Number prefix—see end of Replaceable Electrical Parts List.

SEE PARTS LIST FOR SEMICONDUCTOR TYPES.

Static Sensitive Devices — See Maintenance Section

A21 Z-AXIS BOARD

http://manoman.sqhill.com

REV A MAR 1981

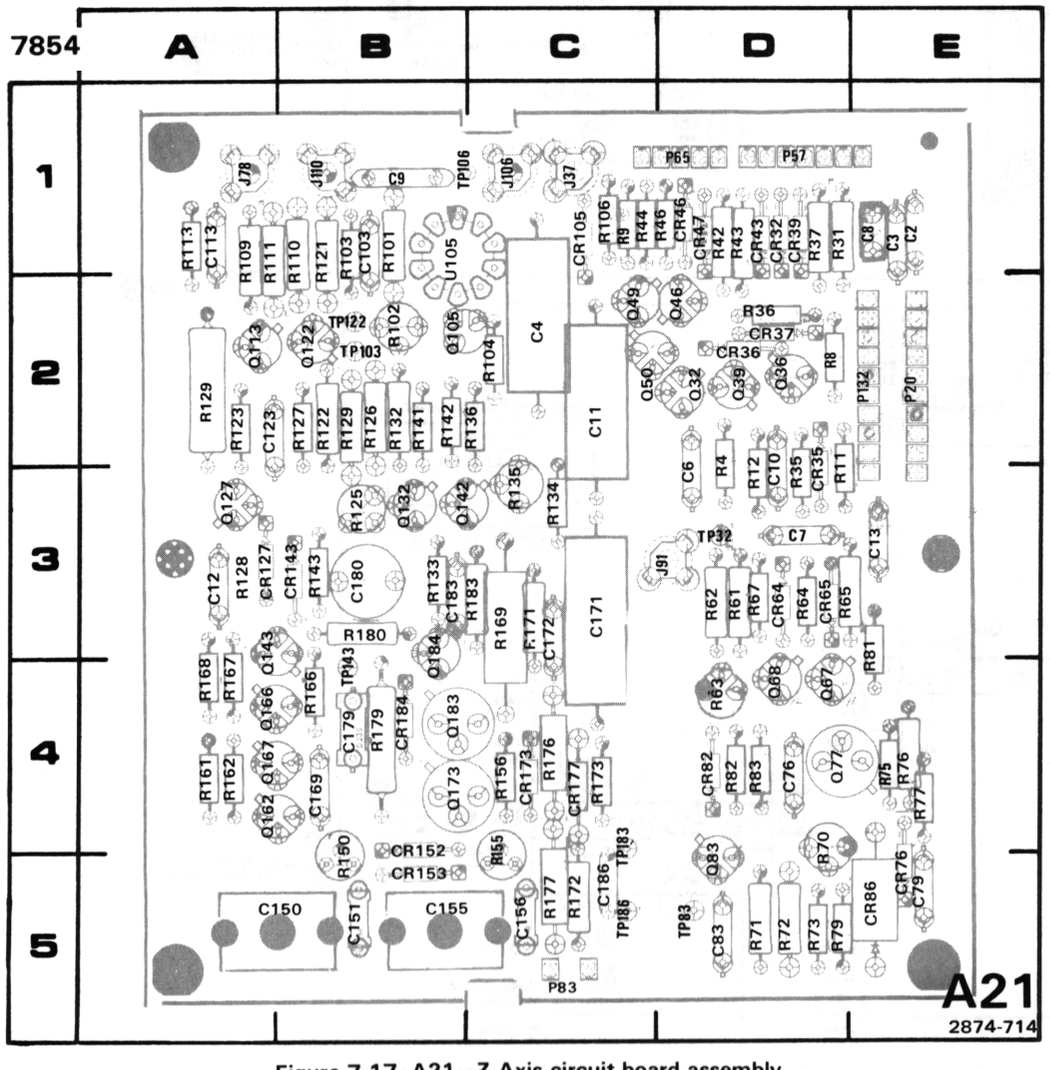

Figure 7-17. A21—Z-Axis circuit board assembly.

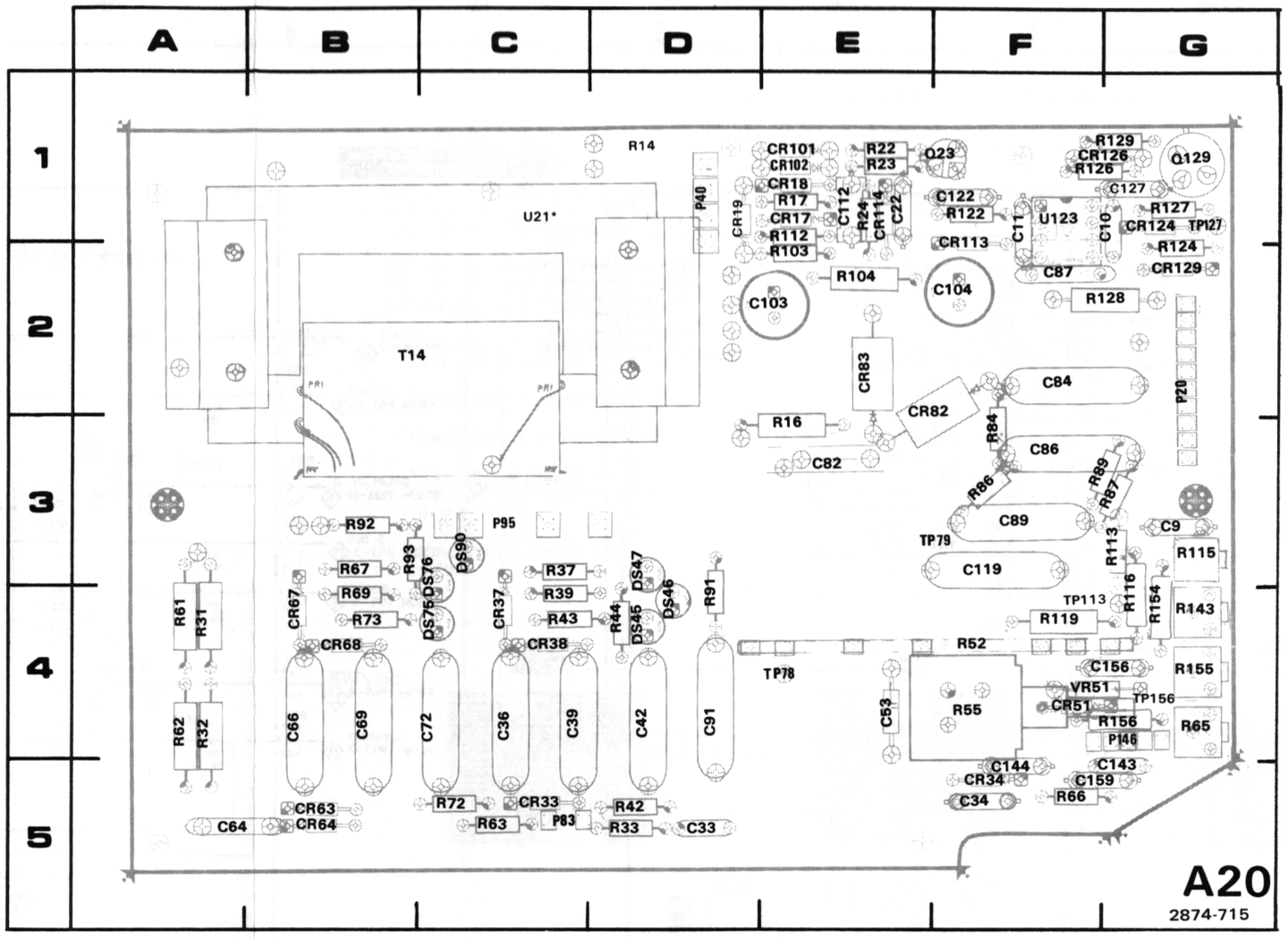

Figure 7-18. A20—High Voltage circuit board assembly.

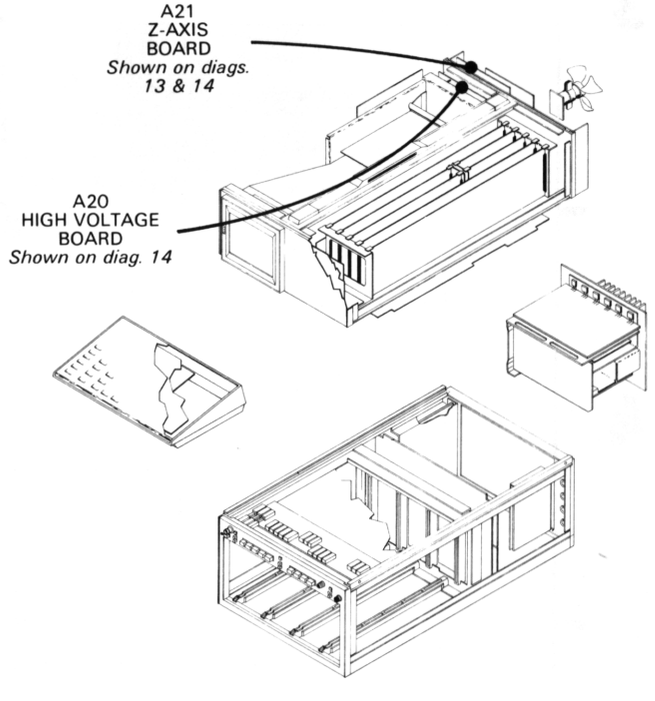

http://manoman.sqhill.com

HIGH-VOLTAGE POWER SUPPLY AND CRT DIAGRAM 14

PARTIAL A5 ASSY

CIRCUIT NUMBER	SCHEM LOCATION	BOARD LOCATION	CIRCUIT NUMBER	SCHEM LOCATION	BOARD LOCATION	CIRCUIT NUMBER	SCHEM LOCATION	BOARD LOCATION
P57	D1	D1	R50	D1	D2			
P57	G3	D1						

Partial A5 ASSY also shown on diagrams 2 and 17.

PARTIAL A6 ASSY

CIRCUIT NUMBER	SCHEM LOCATION	BOARD LOCATION	CIRCUIT NUMBER	SCHEM LOCATION	BOARD LOCATION	CIRCUIT NUMBER	SCHEM LOCATION	BOARD LOCATION
P67	G3	C1	R142	F1	A1			
P142	F1	A1	R148	F2	A1			
P148	F2	A1	R160	G3	B1			

Partial A6 ASSY also shown on diagram 17.

A20 ASSY

CIRCUIT NUMBER	SCHEM LOCATION	BOARD LOCATION	CIRCUIT NUMBER	SCHEM LOCATION	BOARD LOCATION	CIRCUIT NUMBER	SCHEM LOCATION	BOARD LOCATION
C9	A1	G3	CR102	B4	E1	R62	B3	A4
C10	A1	G1	CR113	B4	F1	R63	B3	C5
C11	A1	F1	CR114	B5	E1	R65	B3	G4
C22	B1	E1	CR124	C5	G1	R66	B3	F5
C33	B2	C5	CR126	C4	G1	R67	C3	B3
C34	B2	F5	CR129	C4	G2	R69	C3	B4
C36	B2	C4				R72	C2	C5
C39	C2	C4	DS45	C2	D4	R73	C3	B4
C42	C2	D4	DS46	C2	D4	R84	C3	F3
C53	D2	E4	DS47	C2	D3	R86	C3	F3
C64	B3	A5	DS75	C3	C4	R87	C3	G3
C66	B3	B4	DS76	C3	C3	R89	C3	F3
C69	C3	B4	DS90	D3	C3	R91	D3	D4
C72	C2	C4	P20	A1	G2	R92	D3	B3
C82	B3	E3	P20	C1	G2	R93	D3	B3
C84	C3	F2	P20	F3	G2	R103	B4	E2
C86	C3	F3	P40	A3	D1	R104	B4	E2
C87	C3	F2	P83	A2	C5	R112	B4	E1
C89	C3	F3	P95	D2	C3	R113	B5	G3
C91	D3	D4	P146	F1	G4	R115	B5	G3
C103	B4	E2	P146	F2	G4	R116	B5	G4
C104	B4	F2				R119	C5	F4
C112	B5	E1	Q23	C1	F1	R122	B4	F1
C119	C5	F3	Q129	C4	G1	R124	C4	G2
C122	B4	F1	R14	A3	D1	R126	C5	F1
C127	C4	G1	R16	B3	E3	R127	C4	G1
C143	F1	G5	R17	B3	E1	R128	C4	G2
C144	F2	F5	**R18**	**B4**	**E1**	R129	C5	G1
C156	F2	G4	**R19**	**B4**	**E1**	R143	F1	G4
C159	F3	F5	R22	B1	E1	R154	F2	G4
			R23	C1	E1	R155	F2	G4
CR17	B4	E1	R24	C1	E1	R156	F2	G4
CR18	B4	E1	R31	B2	A4			
CR19	B4	D1	R32	B2	A4	T14	A3	B2
CR33	B2	C5	R33	B2	C5			
CR34	B2	F5	R37	C2	C3	TP78	D3	E4
CR37	C2	C4	R39	C2	C4	TP79	D3	F3
CR38	C2	C4	R42	C2	C5	TP113	B5	F4
CR51	D2	F4	R43	C2	C4	TP127	C4	G1
CR63	B3	B5	R44	C2	D4	TP156	F2	G4
CR64	B3	B5	R52A	C5	F4			
CR67	C3	B4	R52B	D2	F4	U21	B1	C1*
CR68	C3	B4	R52C	D2	F4	U123	C4	F1
CR82	C3	E2	R52D	D2	F4			
CR83	C3	E2	R55	D2	F4	VR51	D2	F4
CR101	B4	E1	R61	B3	A4			

CHASSIS MOUNTED PARTS

CIRCUIT NUMBER	SCHEM LOCATION	BOARD LOCATION	CIRCUIT NUMBER	SCHEM LOCATION	BOARD LOCATION	CIRCUIT NUMBER	SCHEM LOCATION	BOARD LOCATION
L21	E1	CHASSIS	V21	E1	CHASSIS			
L22	E1	CHASSIS						

*Mounted on back of board.

http://manoman.sqhin.com

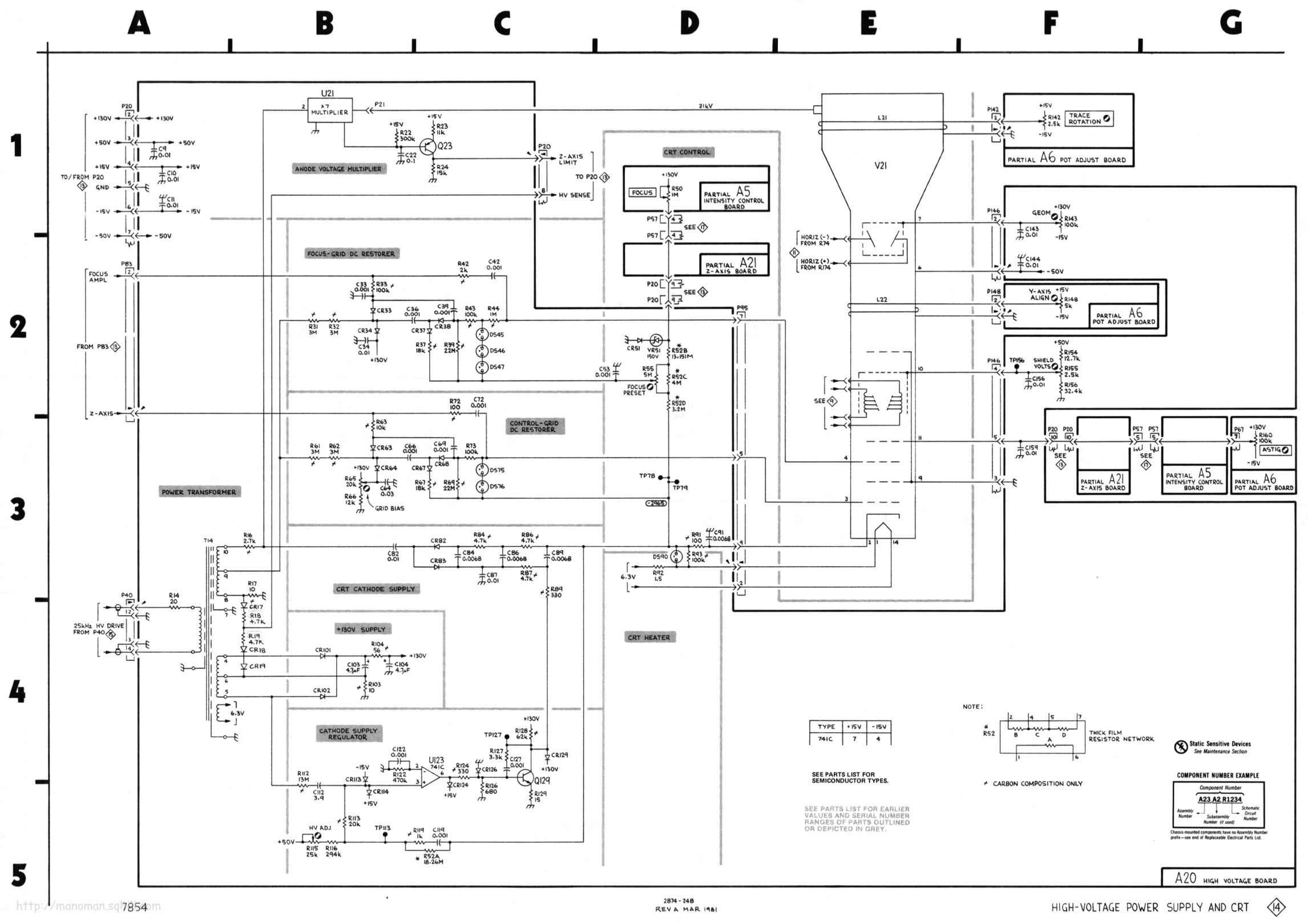

TYPE	+15V	-15V
741C	7	4

SEE PARTS LIST FOR SEMICONDUCTOR TYPES.

SEE PARTS LIST FOR EARLIER VALUES AND SERIAL NUMBER RANGES OF PARTS OUTLINED OR DEPICTED IN GREY.

http://manoman.sqhill.com

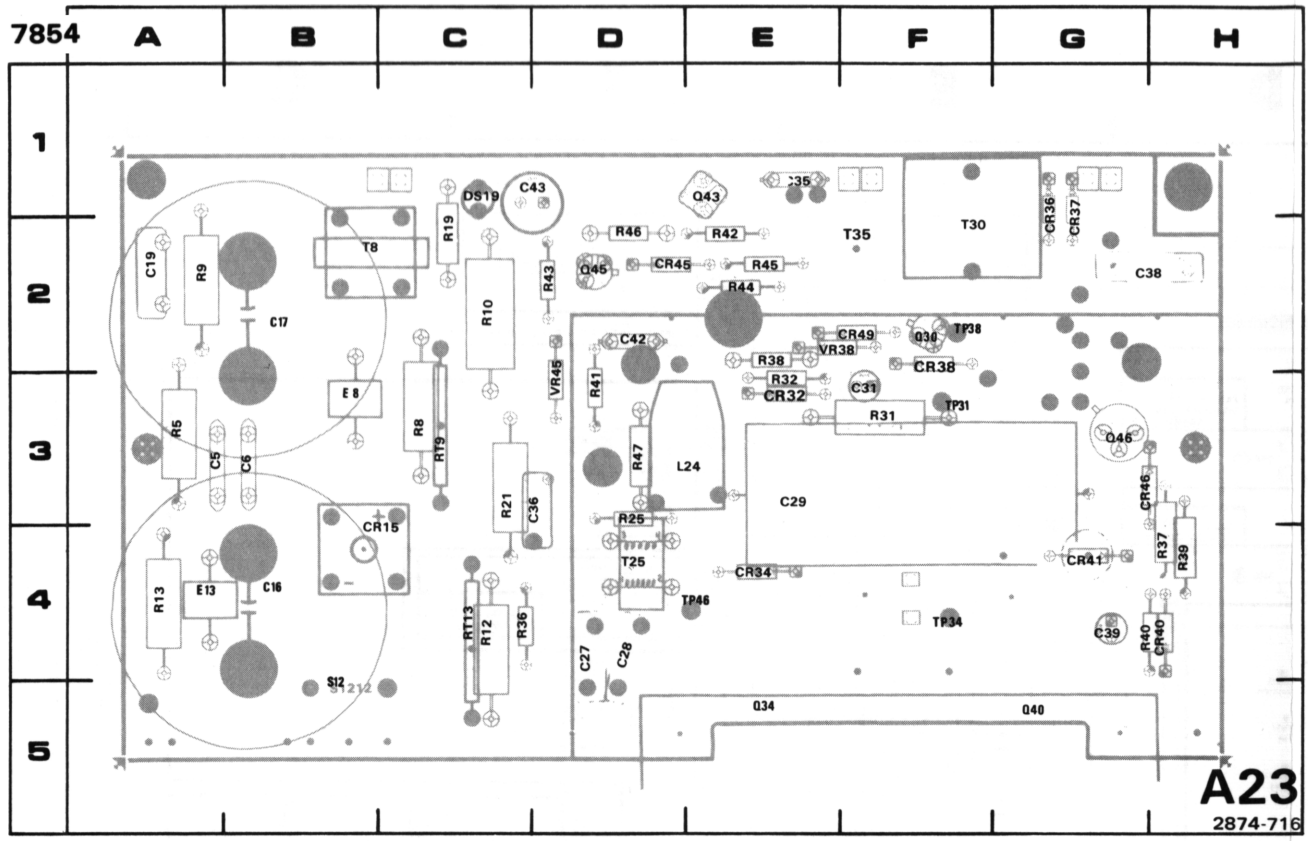

Figure 7-19. A23—Inverter circuit board assembly.

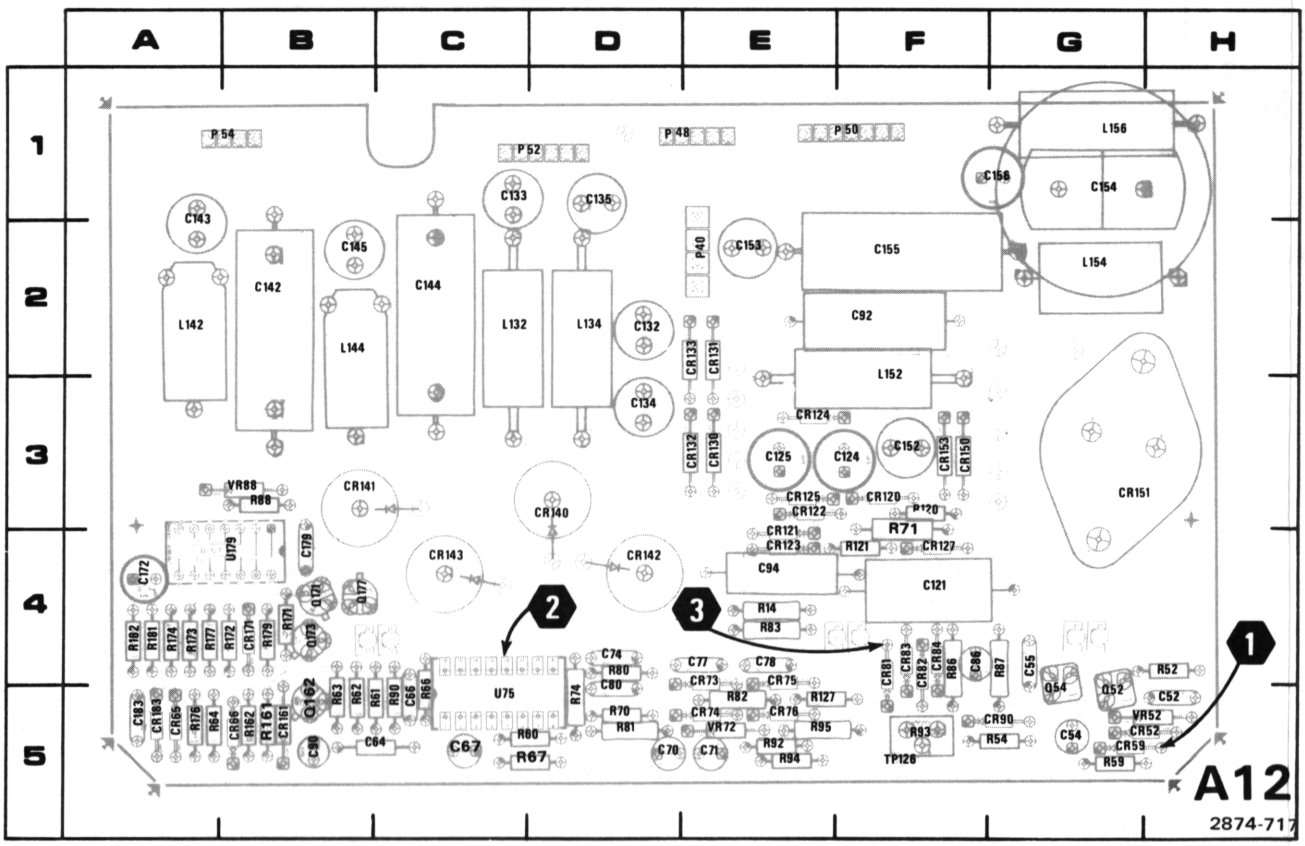

Figure 7-20. A12—Control Rectifier circuit board assembly.

REV A MAR 1981

http://manoman.sghill.com

CONVERTER / RECTIFIER DIAGRAM 15

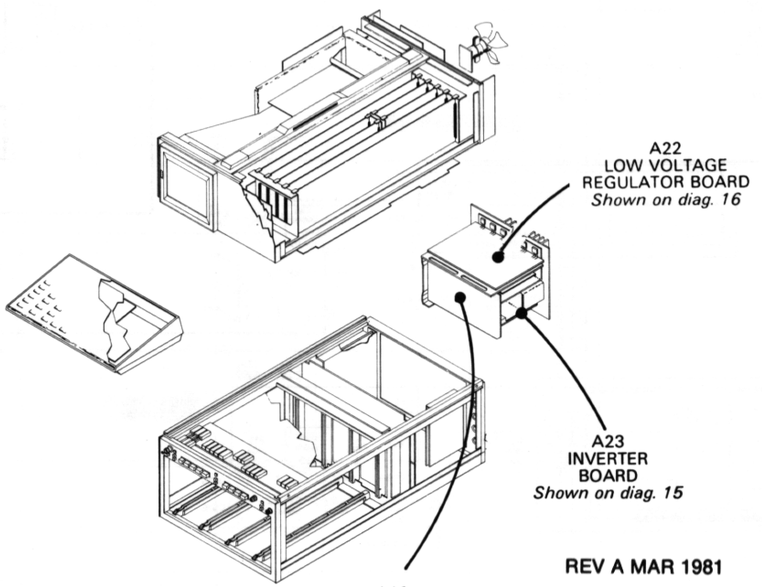

REV A MAR 1981

A12 ASSY

CIRCUIT NUMBER	SCHEM LOCATION	BOARD LOCATION	CIRCUIT NUMBER	SCHEM LOCATION	BOARD LOCATION	CIRCUIT NUMBER	SCHEM LOCATION	BOARD LOCATION	CIRCUIT NUMBER	SCHEM LOCATION	BOARD LOCATION	CIRCUIT NUMBER	SCHEM LOCATION	BOARD LOCATION
C52	B3	H5	C154	E3	G1	CR132	E2	E3	Q162	D4	B5	R94	D4	E5
C54	C3	G5	C155	F3	F2	CR133	E2	E2	Q171	E4	B4	R95	D4	E5
C55	C3	G4	C156	F3	G1	CR140	E2	D3	Q173	E4	B4	R120	E1	F3
C64	C3	B5	C172	E4	A4	CR141	E2	B3	Q177	E4	B4	R121	E1	E4
C66	B4	C5	C179	F3	B4	CR142	E2	D4				R127	F1	E5
C67	B4	C5	C183	F3	A5	CR143	E2	C4	R52	B3	H4	R161	D3	B4
C70	C3	D5				CR150	E3	F3	R54	C3	G5	R162	E3	B5
C71	C3	E5	CR52	B3	G5	CR151	E3	G3	R59	B3	G5	R171	E4	B4
C74	C4	D4	CR59	B3	G5	CR153	E3	F3	R60	B3	D5	R172	E4	B4
C77	D3	E4	CR65	B4	A5	CR161	D4	B5	R61	B3	B5	R173	E3	A4
C78	D3	E4	CR66	B4	B5	CR171	E4	B4	R62	B3	B5	R174	E3	A4
C80	C4	D4	CR73	D3	E4	CR183	F3	A5	R63	B3	B5	R176	E4	A5
C86	D4	F4	CR74	D3	E5				R64	B4	A5	R177	E4	A4
C90	D4	B5	CR75	D3	E4	L132	F2	C2	R66	C4	C5	R179	E3	B4
C92	D4	F2	CR76	D3	E5	L134	F2	D2	R67	B4	D5	R181	E3	A4
C94	D4	E4	CR81	C4	F4	L142	F2	A2	R70	C3	D5	R182	E3	A4
C121	F1	F4	CR82	C4	F4	L144	F2	B2	R71	C3	E4			
C124	E1	E3	CR83	D4	F4	L152	F3	F2	R74	C4	D5	TP126	F1	F5
C125	E2	E3	CR84	D4	F4	L154	F3	G2	R80	C4	D4			
C132	E2	D2	CR90	C3	G5	L156	F3	G1	R81	C4	D5	U75	C4	C5
C133	F2	C1	CR120	E1	F3				R82	C4	E5	U179A	F4	B4
C134	E2	D3	CR121	E1	E4	P40	E1	E2	R83	C4	E4	U179B	F4	B4
C135	F2	D1	CR122	E2	E3	P48	F1	D1	R84	C4	E4	U179C	F3	B4
C142	E2	B2	CR123	E1	E4	P50	F3	F1	R86	D4	E4			
C143	F2	A1	CR124	E1	E3	P52	F2	C1	R87	D4	G4	VR52	B3	G5
C144	E2	C2	CR125	E1	E3	P54	E5	A1	R88	D4	B3	VR72	D3	E5
C145	F2	B2	CR127	E1	F4				R90	D4	C5	VR88	D4	B3
C152	E3	F3	CR130	E2	E3	Q52	B3	G5	R92	D4	E5			
C153	F3	E2	CR131	E2	E2	Q54	B3	G5	R93	D4	F5			

PARTIAL A22 ASSY

CIRCUIT NUMBER	SCHEM LOCATION	BOARD LOCATION	CIRCUIT NUMBER	SCHEM LOCATION	BOARD LOCATION	CIRCUIT NUMBER	SCHEM LOCATION	BOARD LOCATION	CIRCUIT NUMBER	SCHEM LOCATION	BOARD LOCATION
C8	E4	F5	P54	E4	F5	R1	E4	F6	R5	E4	E6
			P64	F4	H4	R2	E4	E5	R8	E4	F5
CR7	E4	F5	P72	E4	F5	R3	E4	E5			
CR8	E4	F5	P82	F5	B5	R4	E4	E5			

Partial A22 ASSY also shown on diagram 16.

PARTIAL A23 ASSY

CIRCUIT NUMBER	SCHEM LOCATION	BOARD LOCATION	CIRCUIT NUMBER	SCHEM LOCATION	BOARD LOCATION	CIRCUIT NUMBER	SCHEM LOCATION	BOARD LOCATION	CIRCUIT NUMBER	SCHEM LOCATION	BOARD LOCATION	CIRCUIT NUMBER	SCHEM LOCATION	BOARD LOCATION
C5	A2	A3	CR32	C1	D3	Q30	C2	F2	R32	C1	E3	S12	A1	B5
C6	A2	B3	CR34	C1	E4	Q34	C1	E5	R36	D2	C4			
C16	B1	B4	CR36	B2	G1	Q40	C1	G5	R37	C1	H4	T8	B2	B2
C17	B1	B2	CR37	B2	G1	Q43	D2	E1	R38	C2	E2	T25	B1	D4
C19	B1	A2	CR38	D1	F3	Q45	D1	D2	R39	C2	H4	T30	C1	F1
C27	C1	D4	CR40	C2	H4	Q46	C2	G3	R40	C1	G4	T35	D2	E2
C28	C1	D4	CR41	D2	G4				R41	D2	D3			
C29	C1	E3	CR45	D1	D2	R5	A2	A3	R42	D2	E2	TP31	C1	F3
C31	C1	F3	CR46	C2	G3	R8	B2	C3	R43	D2	D2	TP34	D1	F4
C35	D2	E1	CR49	D1	F1	R9	B2	A2	R44	D1	E2	TP38	C1	F2
C36	D2	D3				R10	B2	C2	R45	D1	E2	TP46	C2	E4
C38	C2	H2	DS19	B1	C1	R12	A1	C4	R46	D1	D2			
C39	C2	G4				R13	A1	A4	R47	D1	D3	VR38	C2	F1
C42	C2	D2	E8	B1	B3	R19	B1	C2				VR45	D2	D3
C43	D2	D1	E13	A1	A4	R21	B1	C3	RT9	B2	C3			
						R25	B1	D3	RT13	A1	C4			
CR15	B1	C4	L24	C1	E3	R31	C1	F3						

CHASSIS MOUNTED PARTS

CIRCUIT NUMBER	SCHEM LOCATION	BOARD LOCATION	CIRCUIT NUMBER	SCHEM LOCATION	BOARD LOCATION	CIRCUIT NUMBER	SCHEM LOCATION	BOARD LOCATION	CIRCUIT NUMBER	SCHEM LOCATION	BOARD LOCATION
C37	D1	CHASSIS	FL10	A3	CHASSIS	P10	A4	CHASSIS	S10	A3	CHASSIS
						P11	A3	CHASSIS	S72	E4	CHASSIS
F10	A3	CHASSIS	L37	D1	CHASSIS	P83	F5	CHASSIS			
									T110	E2	CHASSIS

http://manoman.sqhill.com

VOLTAGE AND WAVEFORM CONDITIONS

The voltages shown were obtained with the 7854 front panel variable controls at midrange except INTENSITY controls fully counterclockwise; VERTICAL MODE (LEFT); TRIGGER SOURCE (VERT MODE); HORIZONTAL MODE (B). No plug-in units were installed.

Voltage Conditions. The voltages shown on the diagram were obtained using a digital multimeter with a 10 MΩ input impedance. (Tektronix DM501 Digital Multimeter.)

Waveform Conditions. The waveforms shown below were obtained using a test oscilloscope system with 1 MΩ input impedance and at least 60 MHz bandwidth. (Tektronix 7603 Oscilloscope, 7B53A Time Base, and 7A13 Differential Comparator equipped with a 10X probe.)

1

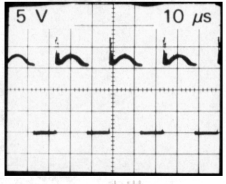

1.1 V

2

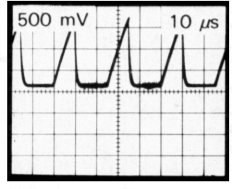

0 V

3

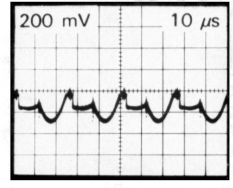

0 V

http://manoman.sqhill.com

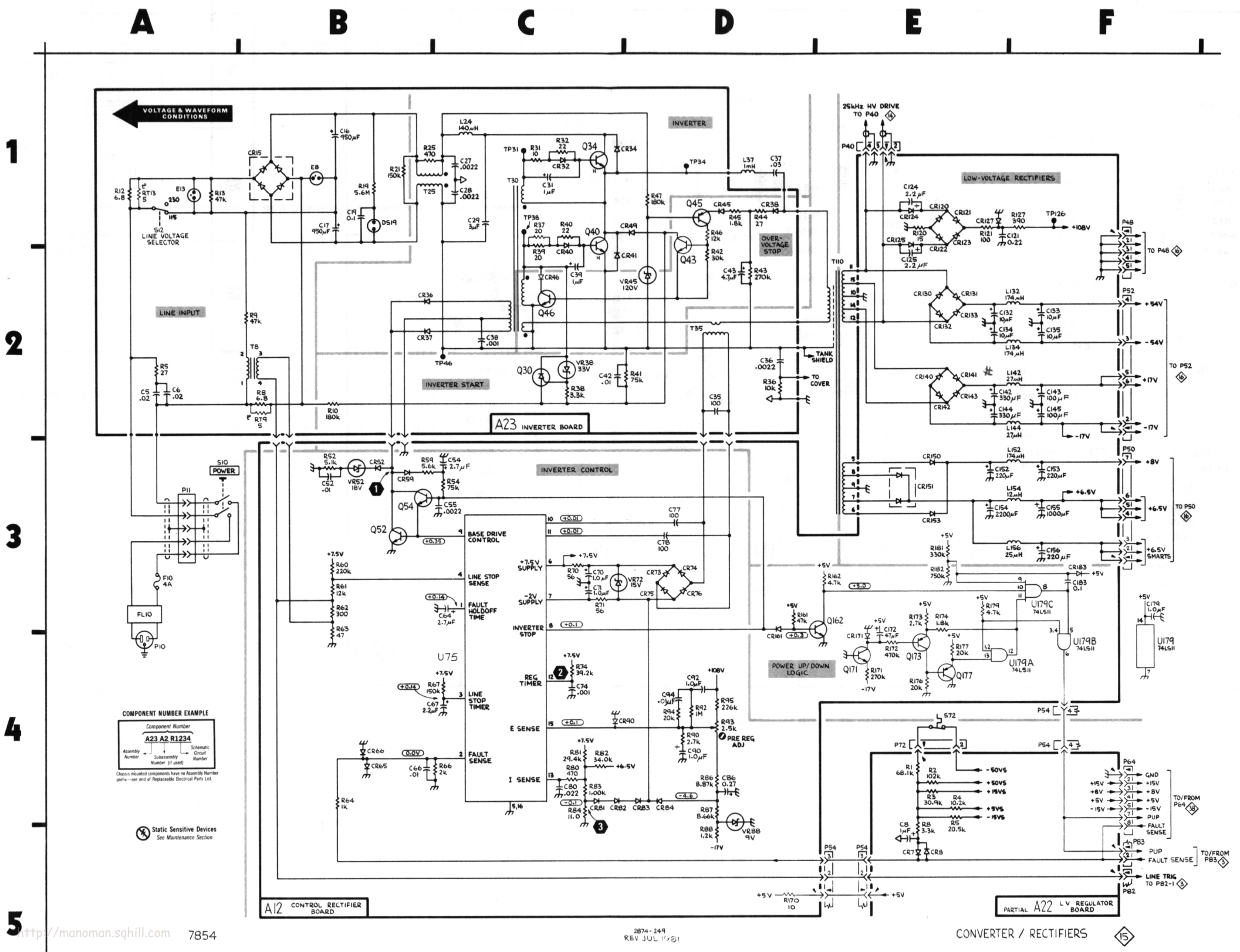
A
B
C
D
E
F
1
2
3
4
5
VOLTAGE & WAVEFORM CONDITIONS
INVERTER
LOW-VOLTAGE RECTIFIERS
LINE INPUT
INVERTER START
INVERTER CONTROL
OVER-VOLTAGE STOP
POWER UP/DOWN LOGIC
A23 INVERTER BOARD
A12 CONTROL RECTIFIER BOARD
PARTIAL A22 LV REGULATOR BOARD
25kHz HV DRIVE TO P40
TO P48
TO P52
TO P50
+54V
-54V
+17V
-17V
+8V
+6.5V
+6.5V SMARTS
TANK SHIELD
TO COVER
SI2 LINE VOLTAGE SELECTOR
SI0 POWER
FL10
BASE DRIVE CONTROL
LINE STOP SENSE
FAULT HOLDOFF TIME
INVERTER STOP
REG TIMER
LINE STOP TIMER
E SENSE
FAULT SENSE
I SENSE
PRE REG ADJ
U75
Q171
Q173
Q177
Q162
U179A 74LS11
U179B 74LS11
U179C 74LS11
U179 74LS11
S72
-50VS
+50VS
+15VS
+9VS
-15VS
GND
+15V
+8V
+5V
-15V
PUP
FAULT SENSE
LINE TRIG
TO/FROM P64
TO/FROM P83
COMPONENT NUMBER EXAMPLE
Component Number
A23 A2 R1234
Assembly Number
Subassembly Number (if used)
Schematic Circuit Number
Chassis mounted components have no Assembly Number prefix—see end of Replaceable Electrical Parts List.
Static Sensitive Devices
See Maintenance Section
CONVERTER / RECTIFIERS
15
7854
2874-249
REV JUL 1981
http://manoman.sqhill.com

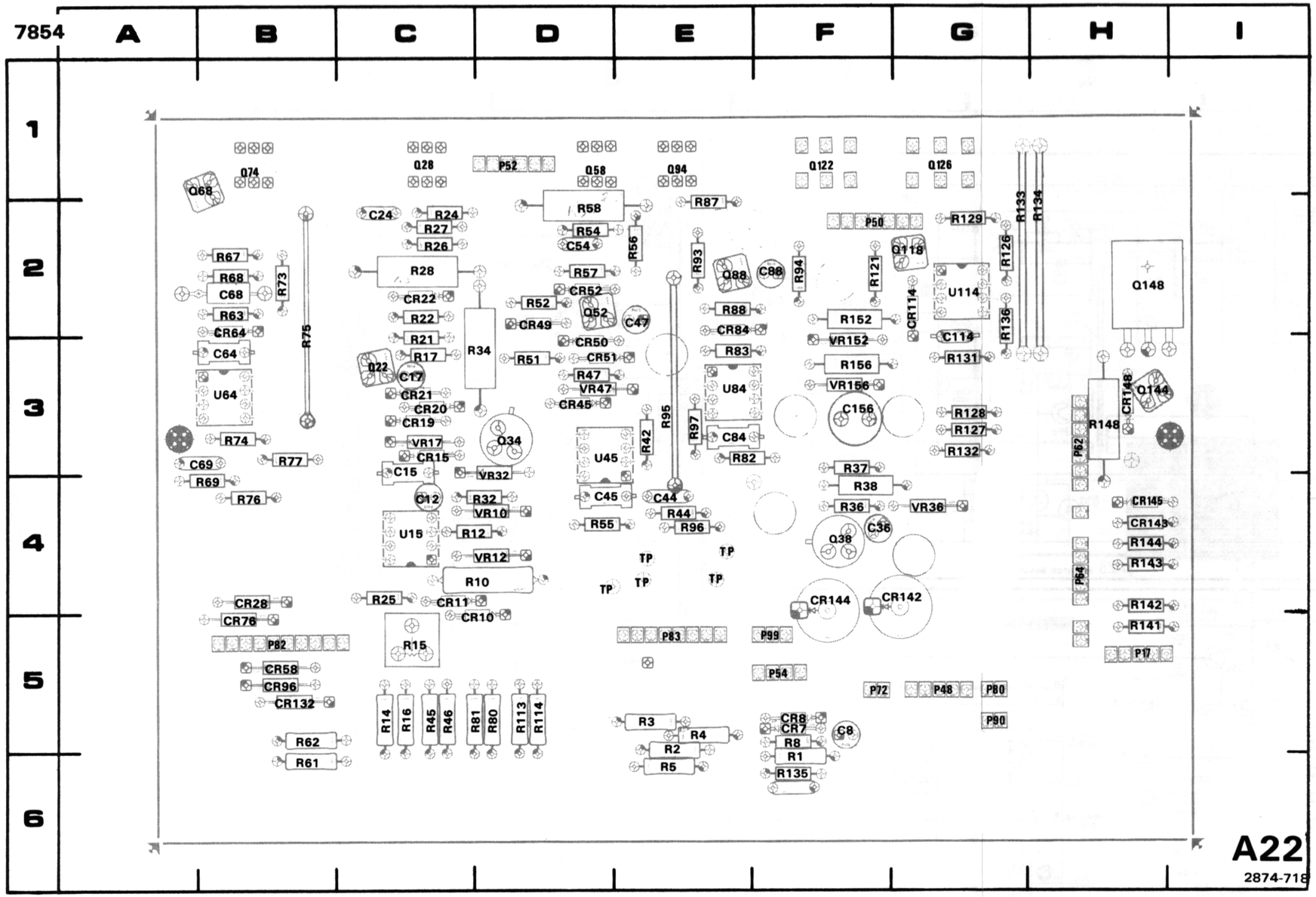

Figure 7-21. A22—Low Voltage circuit board assembly.

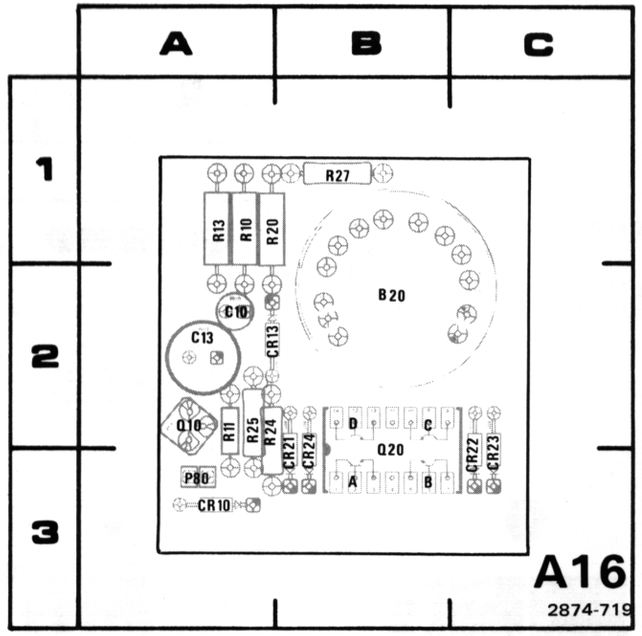

Figure 7-22. A16—Fan circuit board assembly.

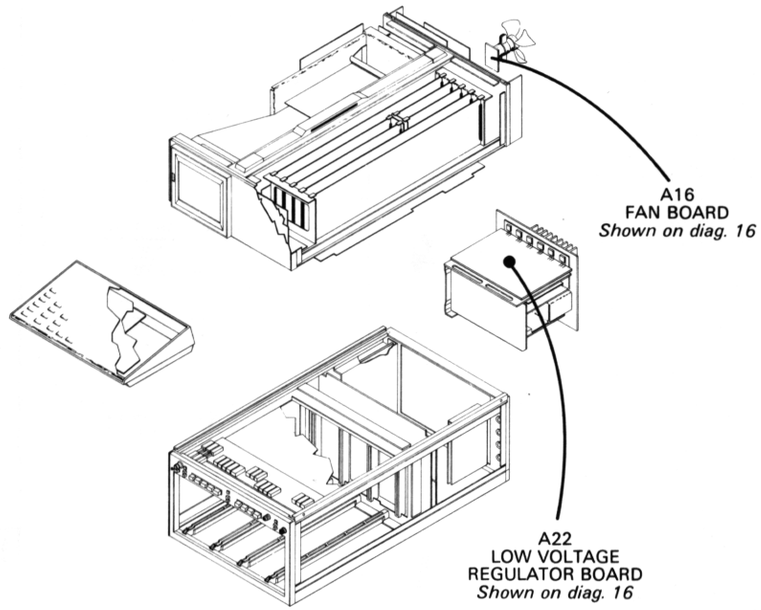

http://manoman.sqhill.com

LOW-VOLTAGE REGULATOR AND FAN BOARD DIAGRAM 16

A16 ASSY

CIRCUIT NUMBER	SCHEM LOCATION	BOARD LOCATION
B20	B4	B2
C10	A4	A2
C13	B4	A2
CR10	A4	A3
CR13	B4	A2
CR21	B4	B3
CR22	B4	C3
CR23	B5	C3
CR24	B5	B3
Q10	B4	A2
Q20A	B5	B3
Q20B	A5	B3
Q20C	B5	B3
Q20D	B5	B3
R10	A4	A1
R11	B4	A2
R13	B4	A1
R20	B5	A1
R24	C5	A3
R25	C5	A2
R27	B4	B1

PARTIAL A22 ASSY

CIRCUIT NUMBER	SCHEM LOCATION	BOARD LOCATION
C12	A1	C4
C15	B2	C3
C17	B1	C3
C24	B1	C2
C36	B2	F4
C44	B2	E4
C45	B3	D4
C47	B3	E2
C54	B3	D2
C64	D1	B3
C68	D1	B2
C69	E1	B3
C84	D3	E3
C88	D2	F2
C114	D3	G3
C156	D2	F3
CR10	A1	D5
CR11	A1	C4
CR15	B1	C3
CR19	B1	C3
CR20	B1	C3
CR21	B1	C3
CR22	B1	C2
CR28	C1	B4
CR45	B3	D3
CR49	B3	D2
CR50	B3	D3
CR51	B3	D2
CR52	B3	D2
CR58	C3	B5
CR64	D1	B2
CR76	E1	B5
CR84	D2	E2
CR96	E2	B5
CR114	D3	G2
CR132	E3	B5
CR142	D4	G4
CR143	D4	H4
CR144	D4	F4
CR148	E4	H3
P17	D4	H5
P48	C3	G5
P50	D5	F2
P52	A1	D1
P52	D2	D1
P62	E5	H3
P80	A4	G5
P82	C1	B5
P82	C3	B5
P82	E2	B5
P82	E3	B5
P83	C2	E5
P83	E1	E5
P83	E3	E5
P90	A3	G5
P99	D4	F5
Q22	B1	C3
Q28	B1	C1
Q34	A2	D3
Q38	B2	F4
Q52	B3	D2
Q58	B3	D1
Q68	D1	B1
Q74	E1	B1
Q88	D2	E2
Q94	E2	E1
Q118	D3	G2
Q122	D3	F1
Q126	E3	G1
Q144	D4	H3
Q148	E4	H2
R10	A1	D4
R12	A1	D4
R14	A2	C5
R15	A2	C5
R16	B2	C5
R17	B1	C3
R21	B1	C3
R22	B1	C2
R24	B1	C2
R25	B2	C4
R26	B1	C2
R27	B1	C2
R28	B1	C2
R32	A2	D4
R34	A2	D3
R36	B2	F4
R37	B2	F3
R38	B2	F4
R42	A3	E3
R44	B2	E4
R45	A2	C5
R46	B3	C5
R47	B3	D3
R51	B3	D3
R52	B3	D2
R54	B3	D2
R55	B3	D4
R56	B3	E2
R57	B3	D2
R58	B3	D2
R61	D1	B6
R62	D1	B5
R63	D2	B2
R67	D1	B2
R68	D1	B2
R69	E1	B4
R73	E1	B2
R74	E2	B3
R75	E1	B3
R76	E1	B4
R77	E1	B3
R80	D3	D5
R81	D3	D5
R82	D2	E3
R83	D2	E3
R87	D2	E2
R88	D2	E2
R93	E2	E2
R94	E2	F2
R95	E2	E3
R96	E2	E4
R97	E2	E3
R113	D3	D5
R114	D3	D5
R121	D3	F2
R126	E3	G2
R127	E3	G3
R128	E3	G3
R129	E3	G2
R131	D3	G3
R132	E3	G3
R133	E3	G2
R134	E3	H2
R135	E3	F6
R136	E3	G2
R141	D4	H5
R142	D4	H4
R143	D4	H4
R144	D4	H4
R145	D4	H4
R148	E4	H3
R152	D2	F2
R156	D2	F3
U15	A1	C4
U45	A3	D3
U64A	D1	A3
U64B	E2	A3
U84A	E2	E3
U84B	D2	E3
U114A	D3	G2
U114B	E3	G2
VR10	A1	D4
VR12	A1	D4
VR17	B1	C3
VR32	A2	D4
VR36	B2	G4
VR47	B3	D3
VR152	D2	F3
VR156	D2	F3

Partial A22 ASSY also shown on diagram 15.

http://manuman.sqlmf.com

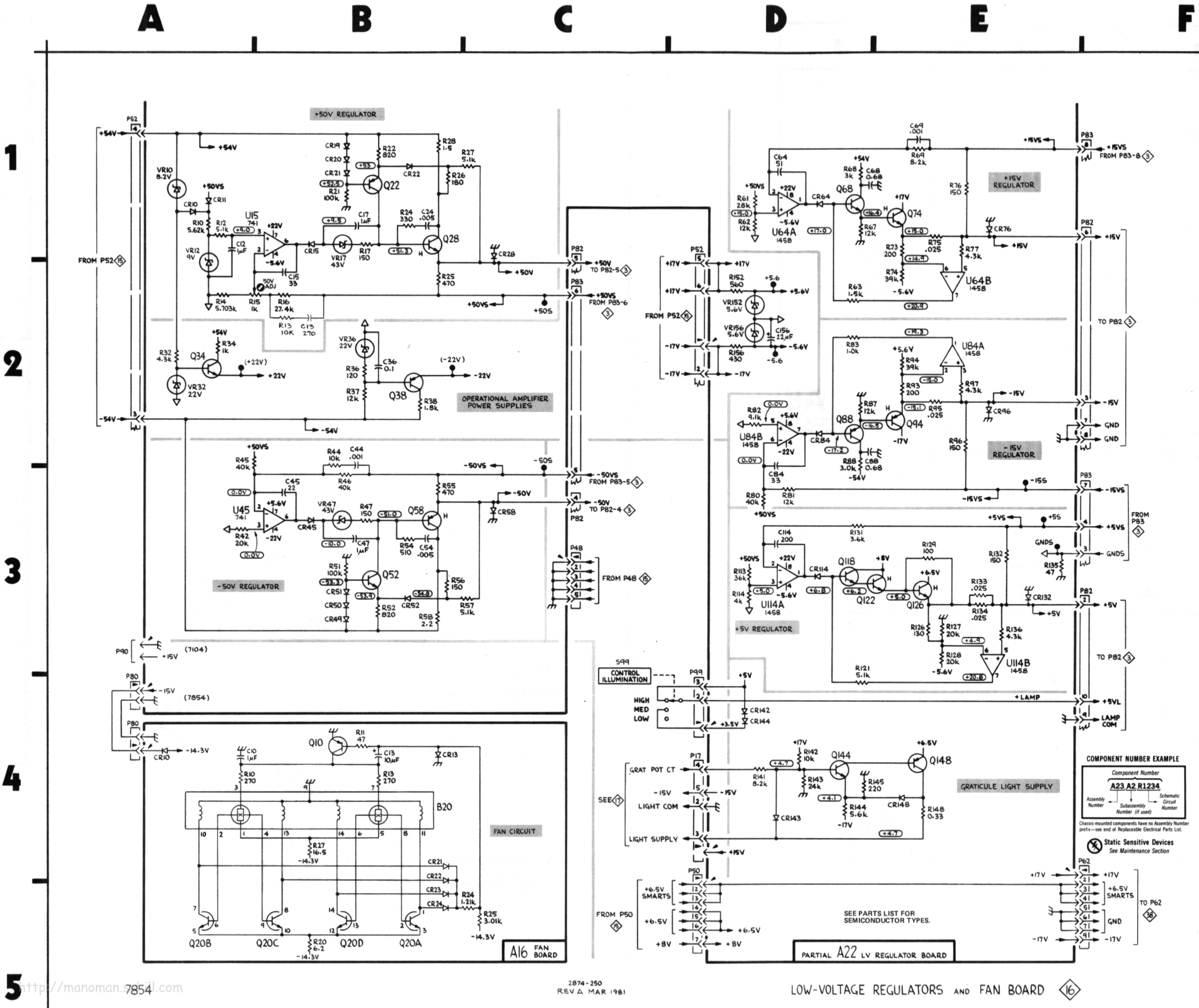
+50V REGULATOR
OPERATIONAL AMPLIFIER POWER SUPPLIES
-50V REGULATOR
FAN CIRCUIT
A16 FAN BOARD
+15V REGULATOR
-15V REGULATOR
+5V REGULATOR
GRATICULE LIGHT SUPPLY
PARTIAL A22 LV REGULATOR BOARD
CONTROL ILLUMINATION
HIGH
MED
LOW
GRAT POT CT
LIGHT COM
LIGHT SUPPLY
+6.5V SMARTS
SEE PARTS LIST FOR SEMICONDUCTOR TYPES.
COMPONENT NUMBER EXAMPLE
Component Number
A23 A2 R1234
Assembly Number
Subassembly Number (if used)
Schematic Circuit Number
Chassis-mounted components have no Assembly Number prefix—see end of Replaceable Electrical Parts List.
Static Sensitive Devices
See Maintenance Section
2874-250
REV A MAR 1981
LOW-VOLTAGE REGULATORS AND FAN BOARD 16
7854

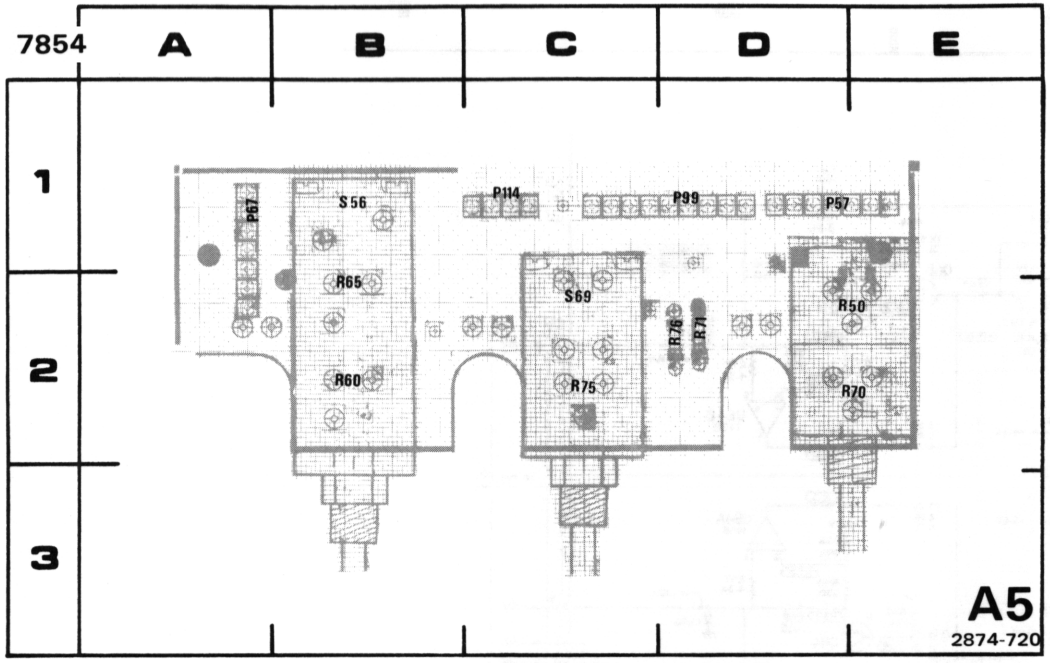

Figure 7-23. A5—Intensity Control circuit board assembly

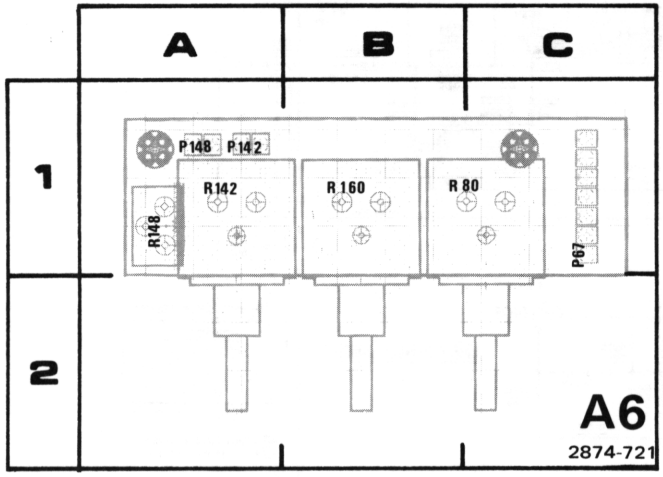

Figure 7-24. A6—Pot Adjust circuit board assembly.

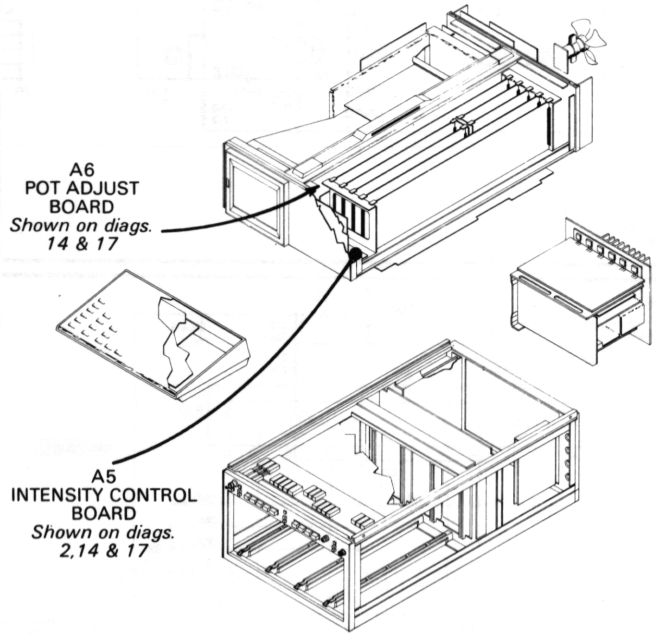

PARTIAL A5 ASSY

CIRCUIT NUMBER	SCHEM LOCATION	BOARD LOCATION
P57	F2	D1
P67	D4	A1
P99	C5	D1
P99	E3	D1
R50	F5	D2
R60	C2	B2
R65	C3	B2
R70	C3	D2
R71	D3	D2
R75	C4	C2
R76	D4	D2
S60	D2	B1
S69	D3	C2

Partial A5 ASSY also shown on diagrams 2 and 14.

PARTIAL A6 ASSY

CIRCUIT NUMBER	SCHEM LOCATION	BOARD LOCATION
P67	D4	C1
P67	E4	C1
P142	E5	A1
R80	E4	B1
R142	E5	A1
R160	E5	B1

Partial A6 ASSY also shown on diagram 14.

CHASSIS MOUNTED PARTS

CIRCUIT NUMBER	SCHEM LOCATION	BOARD LOCATION
DS42	E1	CHASSIS
DS43	E1	CHASSIS
DS44	E1	CHASSIS
P17	D1	CHASSIS
P57	F5	CHASSIS
R55	D1	CHASSIS

http://manoman.sqhill.com

VOLTAGE CONDITIONS

The voltages shown were taken with the 7854 controls set as follows: CRT DISPLAY (SCOPE); TRIGGER SOURCE (VERT MODE); VERTICAL MODE (LEFT); HORIZONTAL MODE (B); READOUT INTENSITY (OFF). No plug-in units were installed.

Voltage Conditions. The voltages on the diagram were taken using a digital multimeter with a 10 MΩ input impedance (Tektronix DM 501 Digital Multimeter installed in a TM 501 Power Module or a Tektronix 7D13 Digital Multimeter used with a readout-equipped 7000-Series Oscilloscope).

http://manoman.sghill.com

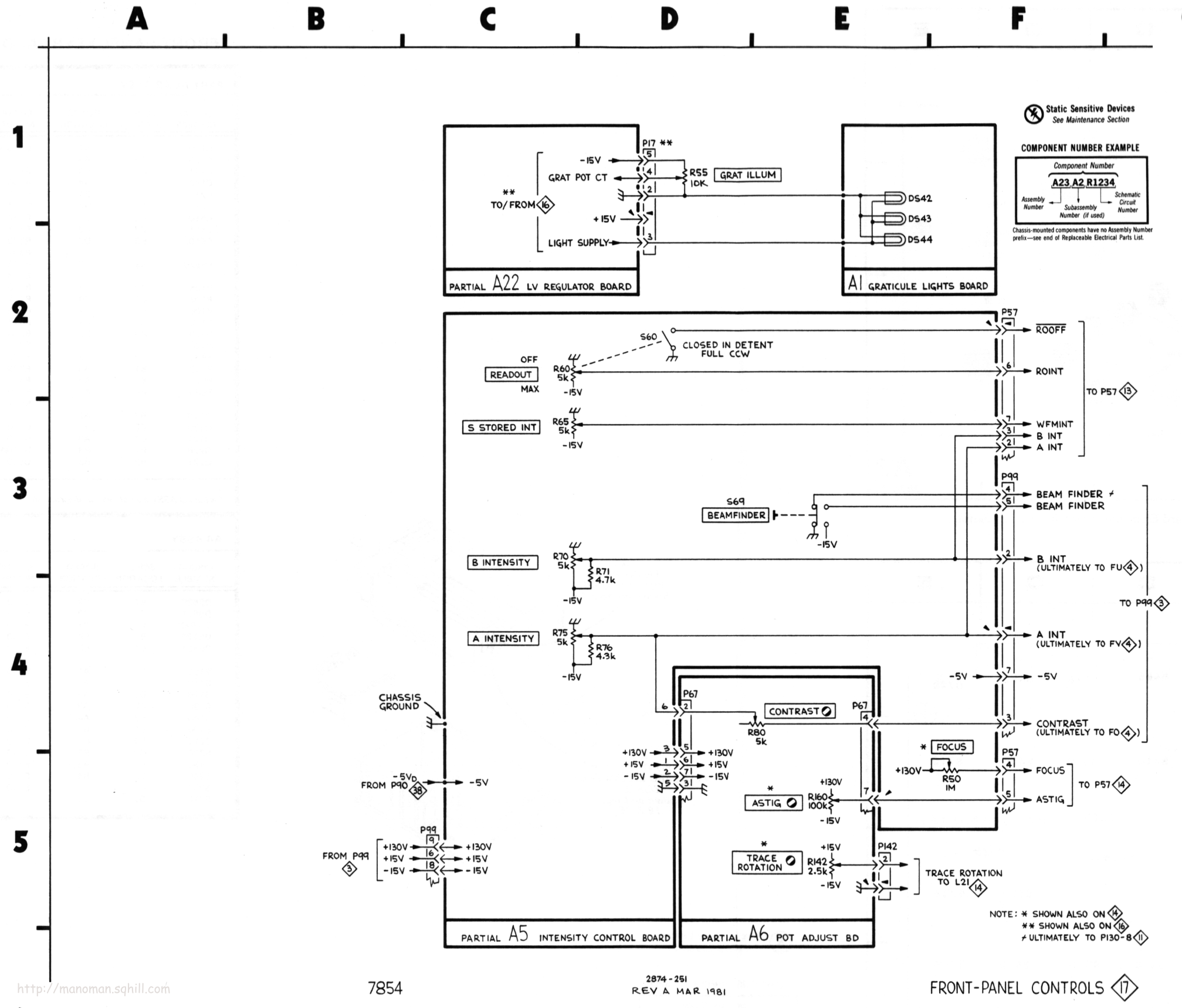

http://manoman.sqhill.com

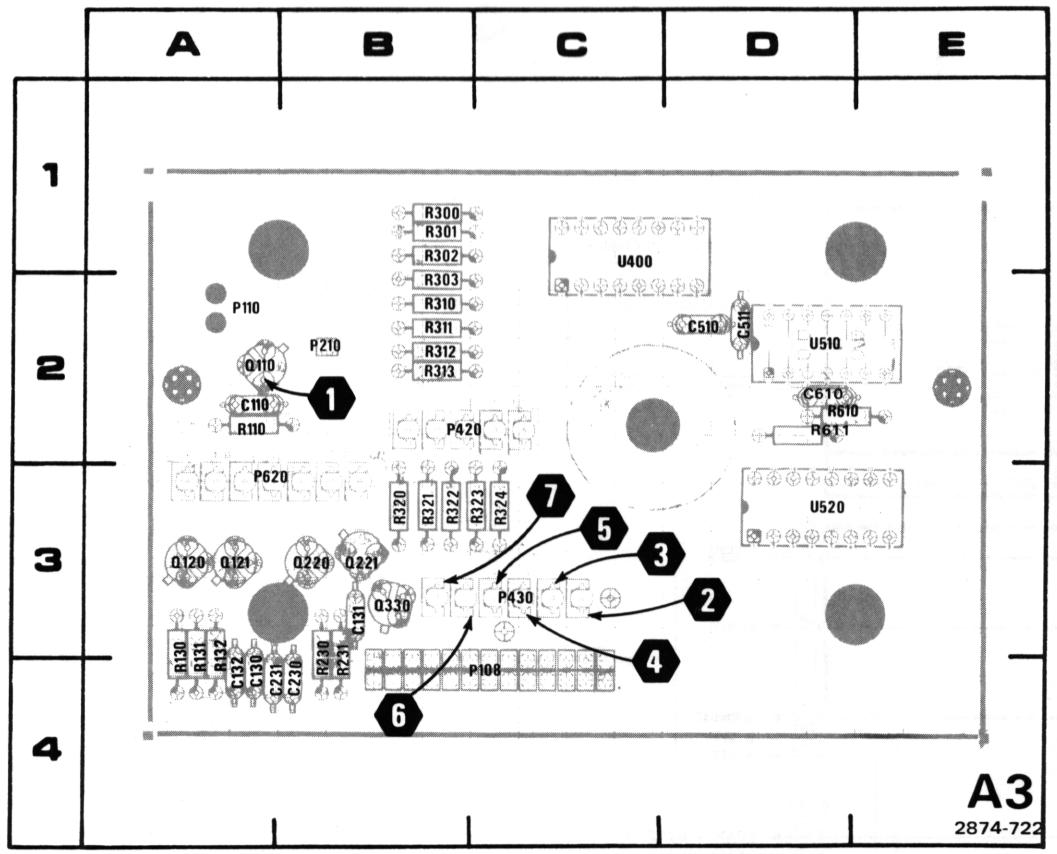

Figure 7-25. A3—Front Panel Keyboard Electronics circuit board assembly.

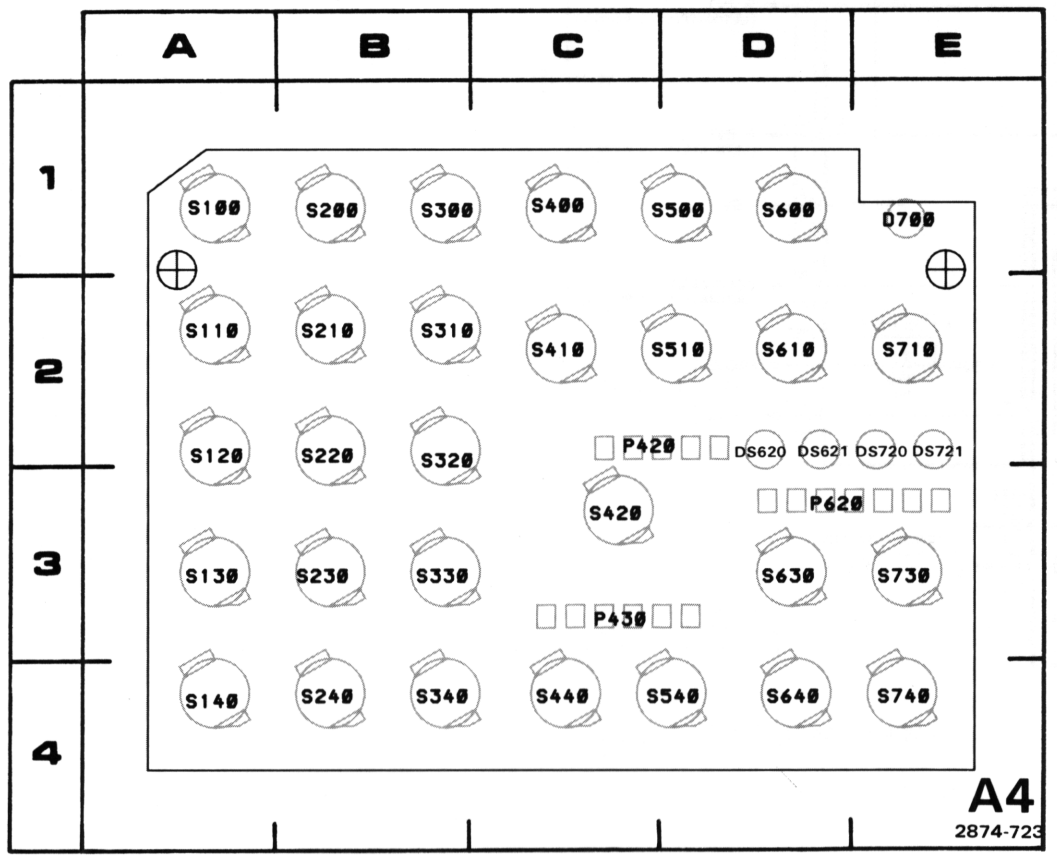

Figure 7-26. A4—Front Panel Button circuit board assembly.

http://manoman.s

REV A MAR 1981

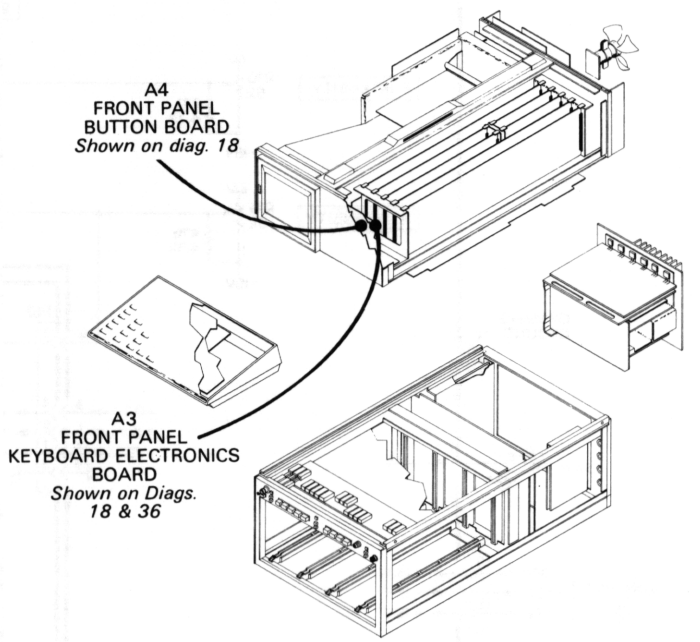

FRONT-PANEL KEYBOARD DIAGRAM 18

PARTIAL A3 ASSY

CIRCUIT NUMBER	SCHEM LOCATION	BOARD LOCATION
C110	B3	A2
C130	A2	A4
C131	A2	B3
C132	A2	A4
C230	A2	B4
C231	A2	A4
C510	A3	D2
C511	G2	D2
C610	B3	D2
LS520	B3	D2
P108	A2	C4
P108	C3	C4
P108	F4	C4
P108	G2	C4
P210	A3	B2
P420	F2	B2
P430	D3	C3
P620	B1	A3
P620	B2	A3
P620	F1	A3
Q110	B3	A2
Q120	C2	A3
Q121	C2	A3
Q220	B2	B3
Q221	B2	B3
Q330	B2	B3
R110	A3	A2
R130	C2	A4
R131	C2	A4
R132	B2	A4
R230	B2	B4
R231	B2	B4
R300	F1	B1
R301	F1	B1
R302	F2	B1
R303	F2	B2
R310	F3	B2
R311	F3	B2
R312	F2	B2
R313	F2	B2
R320	B2	B3
R321	B2	B3
R322	B2	B3
R323	C2	C3
R324	C2	C3
R610	G2	D2
R611	G2	E2
U400	F1	C1
U510C	G2	D2
U510D	G2	D2
U520	C3	D3

Partial A3 ASSY also shown on diagram 36.

A4 ASSY

CIRCUIT NUMBER	SCHEM LOCATION	BOARD LOCATION
DS620	B1	D2
DS621	B1	D2
DS700	C1	D1
DS720	B1	E2
DS721	C1	E2
S100	D3	A1
S110	D2	A2
S120	D2	A2
S130	E2	A3
S140	E2	A4
S200	D3	B1
S210	D2	B2
S220	D2	B2
S230	E2	B3
S240	E2	B4
S300	E3	B1
S310	D2	B2
S320	D2	B2
S330	E2	B3
S340	E2	B4
S400	E2	C1
S410	E1	C2
S420	C2	C3
S440	E1	C4
S500	E2	D1
S510	E1	D2
S540	E1	D4
S600	E3	D1
S610	C3	D2
S630	C1	D3
S640	C2	D4
S710	E3	E2
S730	C1	E3
S740	C2	E4

VOLTAGE AND WAVEFORM CONDITIONS

The voltages and waveforms shown were obtained with the 7854 controls set as follows: CRT DISPLAY (SCOPE); TRIGGER SOURCE (VERT MODE); VERTICAL MODE (LEFT); HORIZONTAL MODE (B); READOUT INTENSITY (OFF).

Voltage Conditions. The voltages were taken with a digital multimeter with a 10 MΩ input impedance (Tektronix DM 501 Digital Multimeter installed in a TM 501 Power Module or Tektronix 7D13 Digital Multimeter used with a readout-equipped 7000-Series Oscilloscope).

Waveform Conditions. The waveforms shown below were obtained using a test oscilloscope system with 10 MΩ input impedance, at least 60 MHz bandwidth and 10X probe (Tektronix 7603 Oscilloscope, 7B92 Time Base, 7A13 Differential Comparator and P6063A Probe).

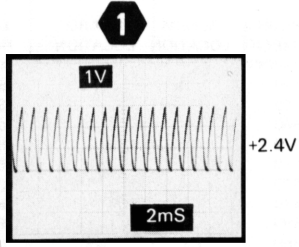

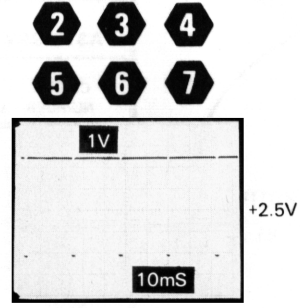

http://manoman.sqhill.com

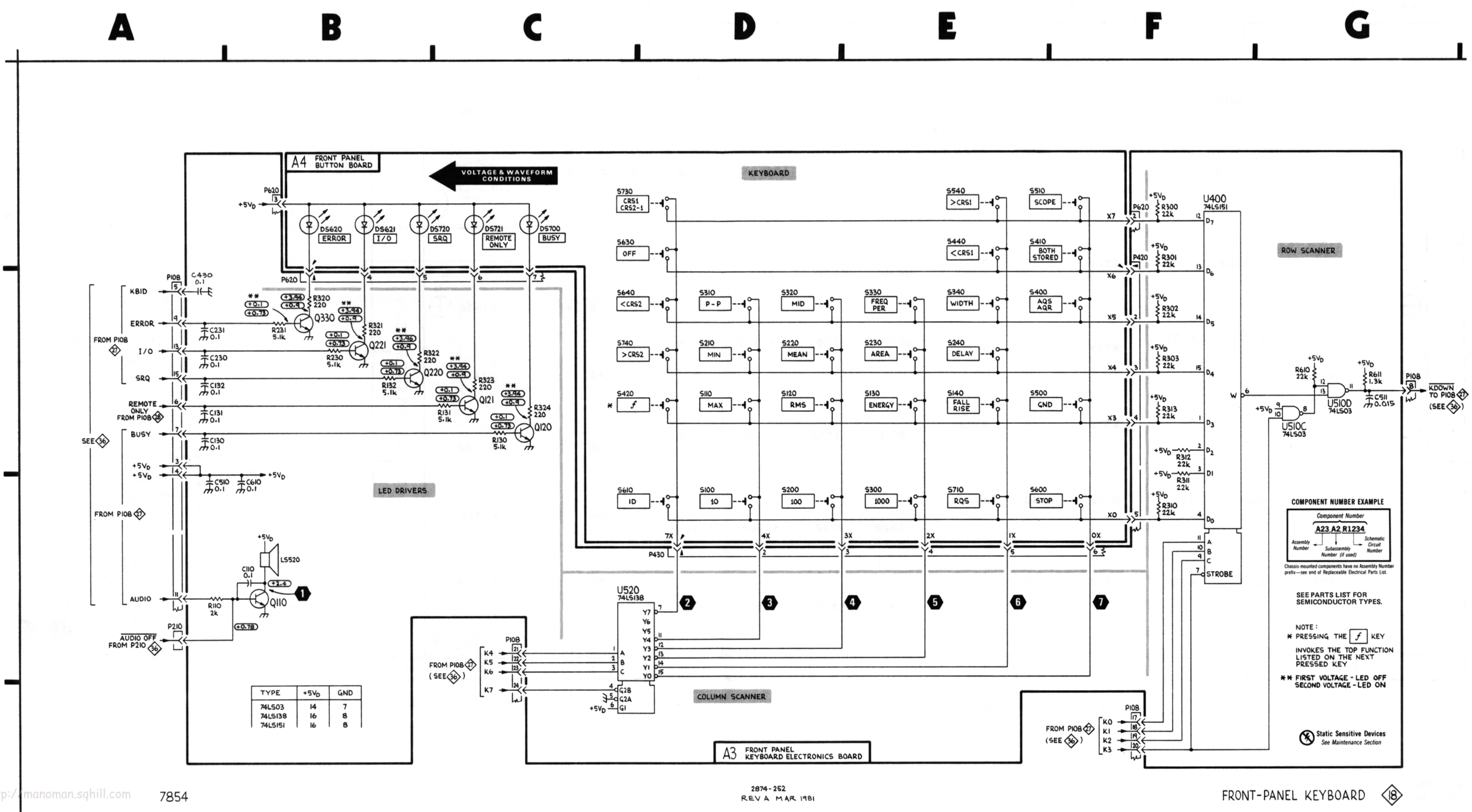

http://manoman.sqhill.com

2874-252
REV A MAR 1981

FRONT-PANEL KEYBOARD 18

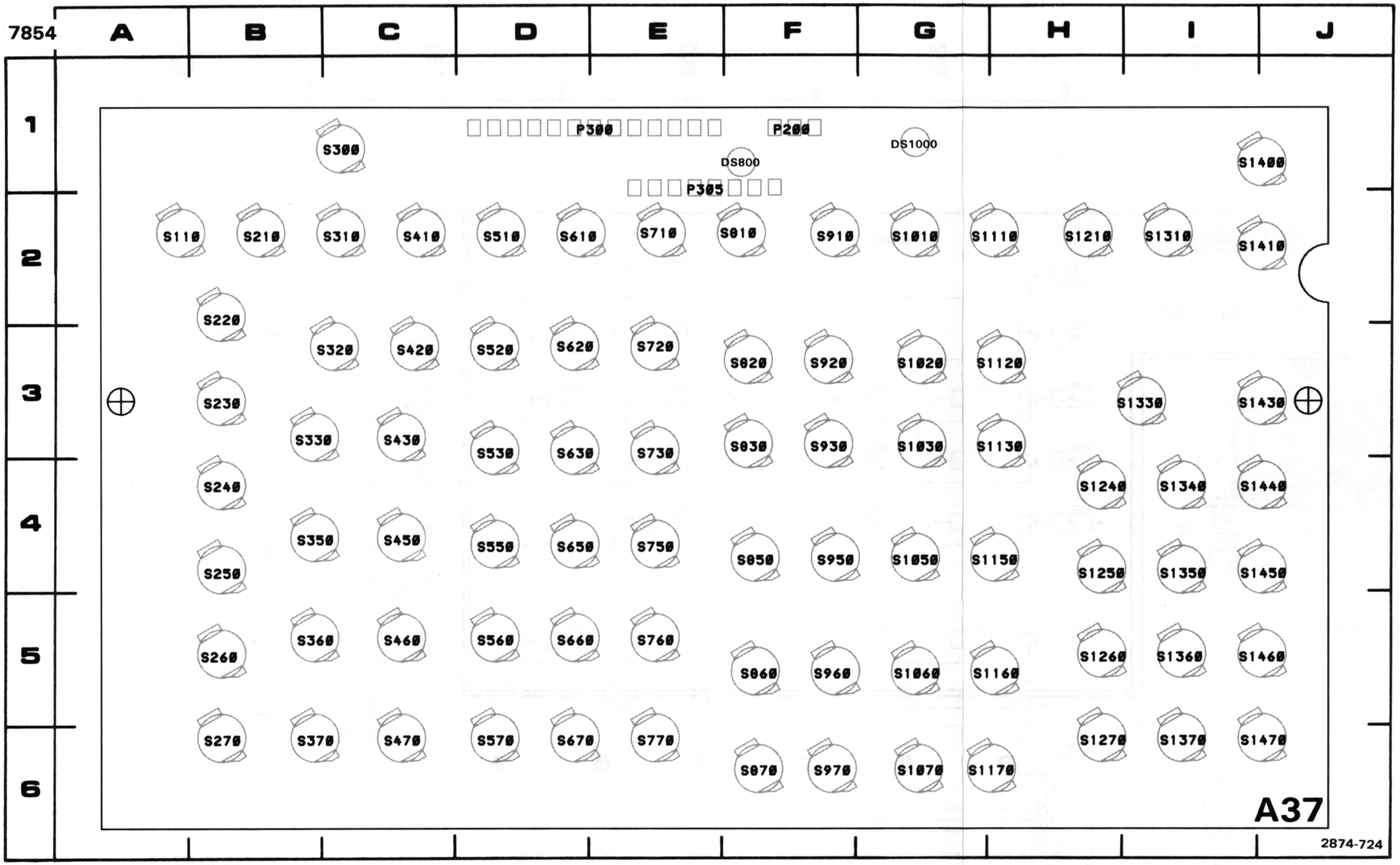

http://manoman.sqhill.com

Figure 7-28. A37—Calculator Button circuit board assembly.

CALCULATOR KEYBOARD DIAGRAM 19

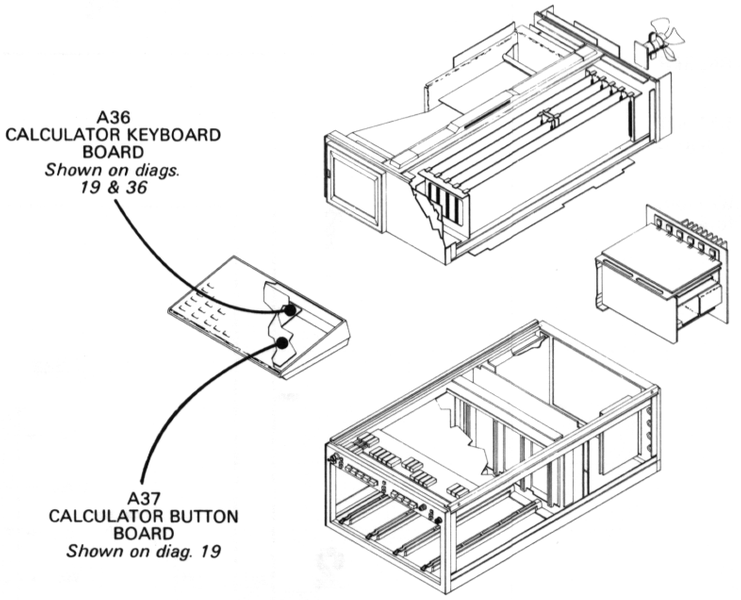

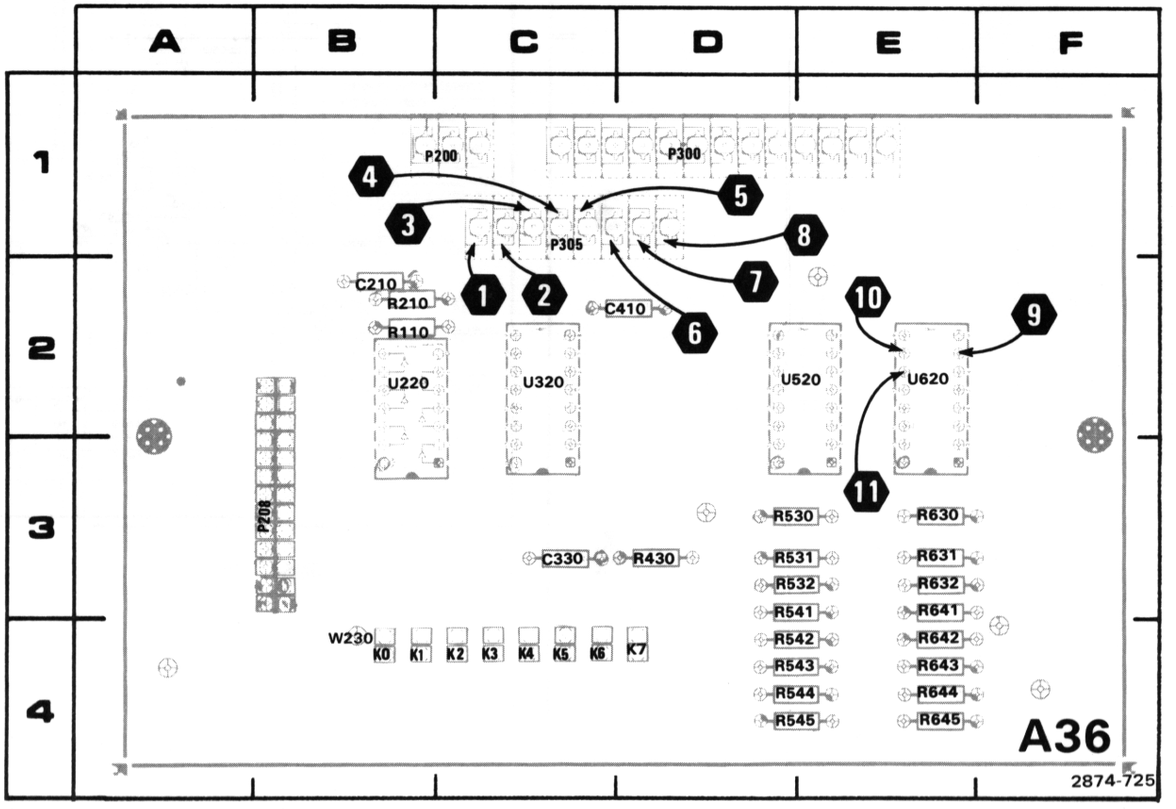

REV A MAR 1981

Figure 7-27. A36—Calculator Keyboard circuit board assembly.

http://manoman.sqhill.com

PARTIAL A36 ASSY

CIRCUIT NUMBER	SCHEM LOCATION	BOARD LOCATION
C210	B3	B2
C330	B3	C3
C410	B3	D2
P200	C2	C1
P208	B2	B3
P300	G1	D1
P305	D4	C1
R110	C3	B2
R210	C2	B2
R430	G2	D3
R530	G1	E3
R531	G2	E3
R532	G2	E3
R541	G2	E3
R542	G1	E4
R543	G1	E4
R544	G1	E4
R545	G1	E4
R630	G3	E3
R631	G3	E3
R632	G3	E3
R641	G3	E3
R642	G3	E4
R643	G3	E4
R644	G2	E4
R645	G2	E4
U220A	G2	B2
U220B	H1	B2
U220D	B3	B2
U220E	B2	B2
U220F	B4	B2
U320	D4	C2
U520	G1	E2
U620	G4	E2
W230	B4	B4

Partial A36 ASSY also shown on diagram 36.

A37 ASSY

CIRCUIT NUMBER	SCHEM LOCATION	BOARD LOCATION
DS800	C2	F1
DS1000	C3	G1
P200	C2	F1
P300	G1	E1
P305	D4	E2
S110	D3	A2
S210	D3	B2
S220	E3	B2
S230	F3	B3
S240	E3	B4
S250	D1	B4
S260	D1	B5
S270	E1	B6
S300	F1	C1
S310	D3	C2
S320	E3	C3
S330	E1	B3
S350	E1	B4
S360	F1	B5
S370	F1	B6
S410	D3	C2
S420	E3	C3
S430	E3	C3
S450	E3	C4
S460	E3	C5
S470	F3	C6
S510	D3	D2
S520	E3	D3
S530	E3	D3
S550	E3	D4
S560	E3	D5
S570	F3	D6
S610	D2	D2
S620	E3	D3
S630	E3	D3
S650	E3	D4
S660	E3	D5
S670	F3	D6
S710	D2	E2
S720	E2	E3
S730	E3	E3
S750	E3	E4
S760	E3	E5
S770	F3	E6
S810	F3	F2
S820	E2	F3
S830	E2	F3
S850	E2	F4
S860	E2	F5
S870	F2	F6
S910	F3	F2
S920	E2	F3
S930	E1	F3
S950	E2	F4
S960	E2	F5
S970	F2	F6
S1010	F3	G2
S1020	E2	G3
S1030	E2	G3
S1050	E2	G4
S1060	D2	G5
S1070	D3	G6
S1110	F3	H2
S1120	E2	H3
S1130	E2	H3
S1150	E2	H4
S1160	D2	H5
S1170	D3	H6
S1210	F2	H2
S1240	E1	H4
S1250	E1	H4
S1260	F1	H5
S1270	F1	H6
S1310	F2	I2
S1330	D3	I3
S1340	E1	I4
S1350	E1	I4
S1360	F1	I5
S1370	F1	O6
S1400	D1	J1
S1410	D1	J2
S1430	D1	J3
S1440	E1	J4
S1450	E1	J4
S1460	F1	J5
S1470	F1	J6

VOLTAGE AND WAVEFORM CONDITIONS

The voltages and waveforms shown were obtained with the 7854 controls set as follows: CRT DISPLAY (SCOPE); TRIGGER SOURCE (VERT MODE); VERTICAL MODE (LEFT); HORIZONTAL MODE (B); READOUT INTENSITY (OFF).

Voltage Conditions. The voltages were taken with a digital multimeter with a 10 MΩ input impedance (Tektronix DM 501 Digital Multimeter installed in a TM 501 Power Module or Tektronix 7D13 Digital Multimeter used with a readout-equipped 7000-Series Oscilloscope.

Waveform Conditions. The waveforms shown below were obtained using a test oscilloscope system with 10 MΩ input impedance, at least 60 MHz bandwidth and 10X probe (Tektronix 7603 Oscilloscope, 7B92 Time Base, 7A13 Differential Comparator and P6063A Probe).

1 2 3 4
5 6 7 8

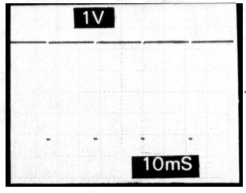

+2.4V

9

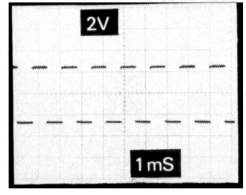

+2.8V

10

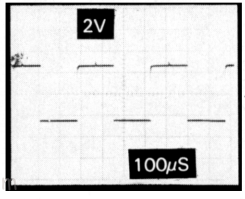

+2.8V

11

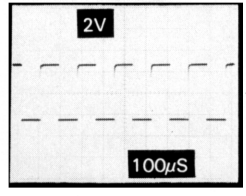

+2.8V

http://manoman.sqhill.com

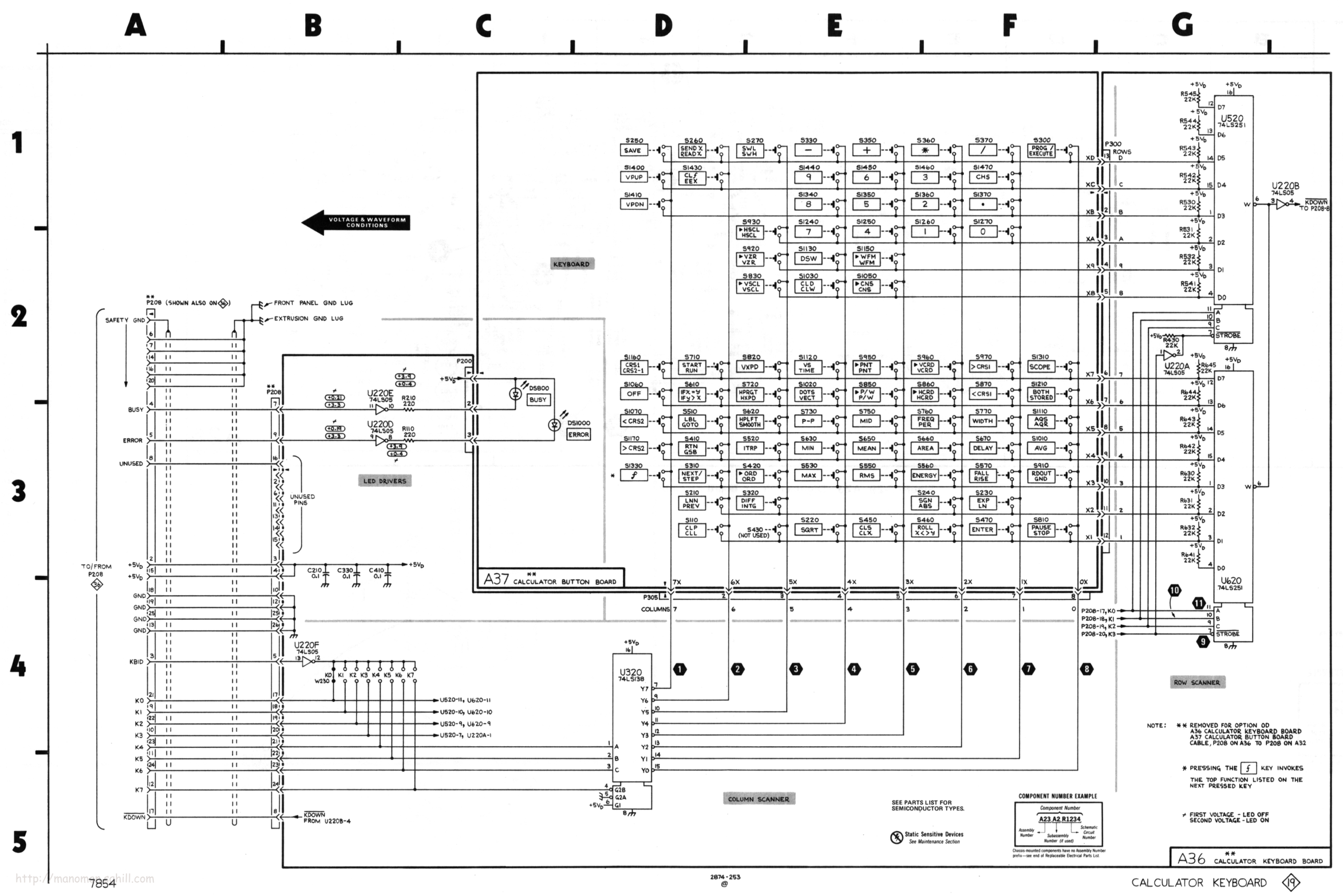

http://manomanuals.com

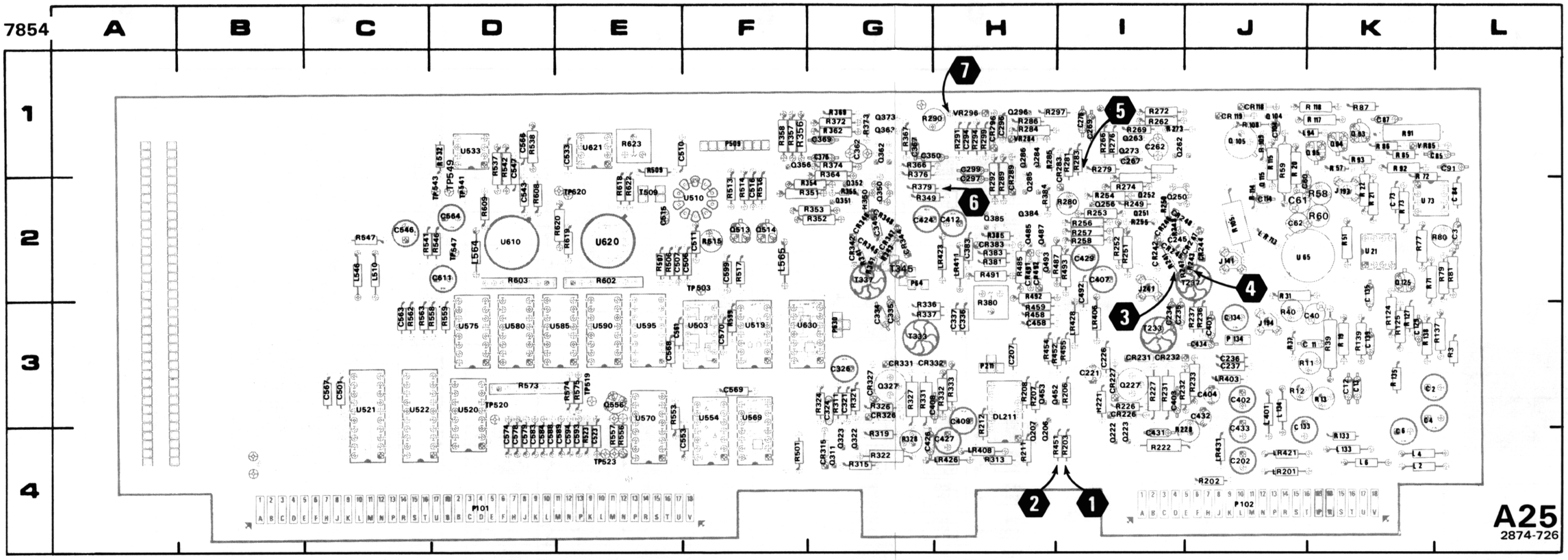

Figure 7-29. A25—Digitizer circuit board assembly.

REV A MAR 1981

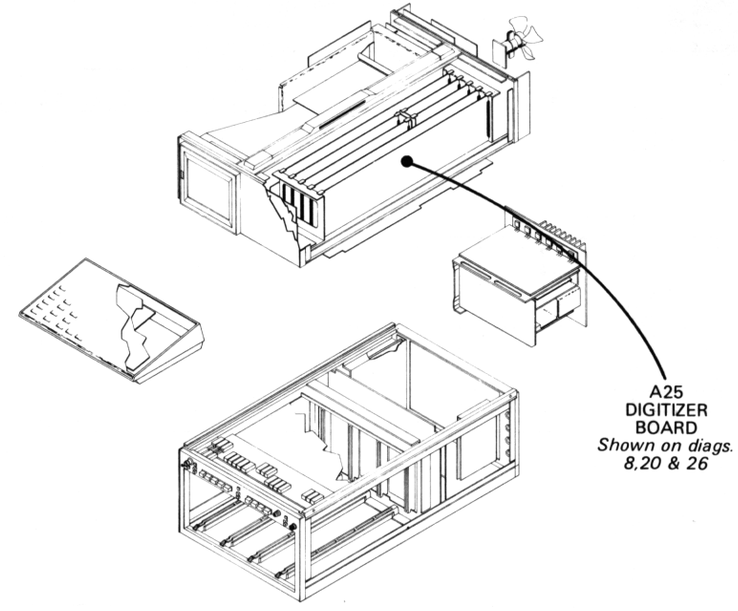

http://manoman.sqhill.com

VERTICAL AND HORIZONTAL SAMPLER DIAGRAM 20

PARTIAL A25 ASSY

CIRCUIT NUMBER	SCHEM LOCATION	BOARD LOCATION
C202	A1	J4
C207	B1	H3
C221	B1	I3
C226	C1	I3
C234	D1	I3
C235	D1	I3
C236	D1	J3
C237	D1	J3
C240	E1	*
C244	E2	*
C245	E1	I2
C246	D1	*
C249	E1	*
C250	E1	*
C262	E2	I1
C264	E2	*
C267	F2	I1
C269	F2	I1
C276	F2	I1
C294	G2	H1
C296	G2	H1
C297	H1	H1
C299	H1	H1
C321	B3	G3
C324	B5	G3
C326	C3	G3
C334	D3	G3
C335	D3	G3
C336	D3	G3
C337	D3	H3
C340	E3	*
C344	E3	*
C345	E3	G2
C349	E3	*
C350	E3	G1
C362	F4	G1
C367	F4	G1
C369	F4	G1
C376	F4	G1
C383	F4	H2
C401	C4	J3
C402	C4	J3
C403	C4	I3
C404	C4	J3
C407	C4	I2
C408	C4	G3
C409	C4	H3
C412	C5	H2
C424	A4	G2
C426	A4	G4
C427	B4	H4
C429	A4	I2
C431	A5	I4
C432	B5	J3
C433	A5	J4
C434	B5	J3
C458	G5	H3
C492	G5	I2
CR226	C1	I3
CR227	C1	I3
CR231	C1	I3
CR232	C1	I3
CR242	E1	I2
CR244	E2	J2
CR245	E3	I2
CR245	E1	I2
CR245	E3	I2
CR246	E1	I2
CR247	E1	J2
CR248	E1	I2
CR283	F2	I1
CR289	G2	H2
CR296	G2	H1
CR315	B3	G4
CR326	C3	G3
CR327	C3	G3
CR331	C3	G3
CR332	C3	G3
CR342	E3	G2
CR344	E3	G2
CR345	E3	G2
CR346	E3	G2
CR347	E3	G2
CR348	E3	G2
CR383	F4	H2
CR491	G5	H2
CR492	G5	H2
DL211	B2	H3
L401	C4	J3
LR201	A1	J4
LR403	C4	J3
LR406	C4	I3
LR408	C4	H4
LR411	C5	H2
LR421	A4	J4
LR423	A4	H2
LR426	A4	H4
LR428	A5	I3
LR431	A5	J4
P64	A3	G2
P102	A1	J4
P102	A4	J4
P102	H5	J4
P211	B3	H3
Q206	A1	H4
Q207	B1	H4
Q222	B1	I4
Q223	C1	I4
Q227	C1	I3
Q250A	E1	I2
Q250B	F1	I2
Q251	E2	I2
Q252	E2	I2
Q256	F2	I2
Q262A	F2	I1
Q262B	F2	I1
Q263	F2	I1
Q273	F2	I1
Q284	F2	H1
Q285A	F2	H2
Q285B	G2	H2
Q286	G2	H1
Q296	H1	H1
Q311	B3	G4
Q322	B3	G3
Q323	C3	G4
Q327	C3	G3
Q350A	E3	G1
Q350B	F3	G1
Q351	E4	G2
Q352	E4	G2
Q356	F4	F1
Q362A	F3	G1
Q362B	F4	G1
Q363	F3	G1
Q373	F4	G1
Q384	F4	H2
Q385A	F4	H2
Q385B	G4	H2
Q452	F4	H3
Q453	G4	H3
Q485	G4	H2
Q487	G4	H2
Q493	G5	H2
R202	A1	J4
R203	A1	I4
R206	B1	I3
R207	B1	H3
R208	B1	H3
R211	B2	H4
R212	B2	H3
R221	B1	I3
R222	B1	I4
R226	C1	I3
R227	C1	I3
R228	C1	I4
R231	C1	I3
R232	C1	I3
R233	C1	J3
R236	D1	J3
R237	D1	J3
R240	E1	*
R241	D1	I2
R243	D2	J2
R244	E2	*
R245	D1	*
R246	D1	*
R247	D1	I2
R248	E1	I2
R249	E1	I2
R251	E2	I2
R252	E2	I2
R253	E2	I2
R254	E2	I2
R255	E2	I2
R256	F2	I2
R257	F2	I2
R258	F2	I2
R262	F1	I1
R264	F2	*
R266	F1	I1
R267	F2	*
R269	F2	I1
R272	F2	I1
R273	F2	I1
R274	F2	I2
R276	F2	I1
R279	F2	I1
R280	F2	I2
R281	F2	I1
R283	F2	I1
R284	G2	H1
R285	F2	H1
R286	G2	H1
R289	G2	H2
R290	G2	G1
R291	G2	H1
R292	G2	H2
R294	G2	F2
R297	G2	H1
R299	H1	H1
R311	B3	G3
R313	B3	H4
R315	B4	G4
R319	B3	G4
R321	B3	G3
R322	B3	G4
R324	B5	G3
R326	C3	G3
R327	C3	G3
R328	C3	G4
R331	C3	G3
R332	C3	H3
R333	C3	H3
R336	D3	G3
R337	D3	G3
R340	E3	*
R341	D3	G2
R343	D3	G2
R344	E3	*
R345	D3	*
R347	D3	G2
R349	E3	G2
R350	E3	G2
R351	E4	F2
R352	E4	G2
R353	E4	G2
R354	E4	F2
R355	E4	G2
R356	F4	F1
R357	F4	F1
R358	F4	F1
R362	F3	G1
R364	F3	G1
R366	F3	G1
R367	F4	G1
R369	F3	G1
R372	F4	G1
R373	F4	G1
R374	F4	G1
R376	F4	G1
R379	F4	G2
R380	F4	H3
R381	F4	H2
R383	F4	H2
R384	G4	H2
R385	F4	H2
R451	F4	H4
R452	G4	H3
R454	G4	H3
R455	G4	I3
R458	G5	H3
R459	G5	H3
R485	G4	H2
R487	F4	H2
R491	G5	H2
R492	G5	H3
R493	G5	I2
T233	C1	I3
T237	D1	I2
T333	C3	G3
T337	D3	G2
T345	A3	G2
VR284	G2	H1
VR296	H1	H1

Partial A25 ASSY also shown on diagrams 8 and 26.

* Mounted on back of board

http://manoman.sqhill.com

VOLTAGE AND WAVEFORM CONDITIONS

The voltages and waveforms shown were taken with the 7854 controls set as follows: CRT DISPLAY (SCOPE); TRIGGER SOURCE (VERT MODE); VERTICAL MODE (LEFT); HORIZONTAL MODE (B); READOUT INTENSITY (MIDRANGE).

Voltage Conditions. The voltages on the diagram were taken using a digital multimeter with a 10 MΩ input impedance (Tektronix DM 501 Digital Multimeter installed in a TM 501 Power Module or Tektronix 7D13 Digital Multimeter used with a readout-equipped 7000-Series Oscilloscope.

A 7A26 Dual Trace Amplifier with coupling switch set to Gnd was installed in the LEFT VERT compartment of the 7854.

Waveform Conditions. The waveforms shown below were obtained using a test oscilloscope system with 10 MΩ input impedance, at least 60 MHz bandwidth and 10X probe (Tektronix 7603 Oscilloscope, 7B92 Time Base, 7A13 Differential Comparator and P6063A Probe).

A Tektronix 7A26 Dual Trace Amplifier with controls set as follows: VOLTS/DIV (0.1 V); DISPLAY MODE (CH1) was installed in the LEFT/VERT compartment of the 7854.

The 0.4 V CALIBRATOR signal was applied to the channel 1 bnc input connector.

A Time Base (Tektronix 7B15) with controls set as follows: TRIGGERING (NORM, AC, INT); TIME/DIV (1 ms) was installed in the B HORIZ compartment of the 7854.

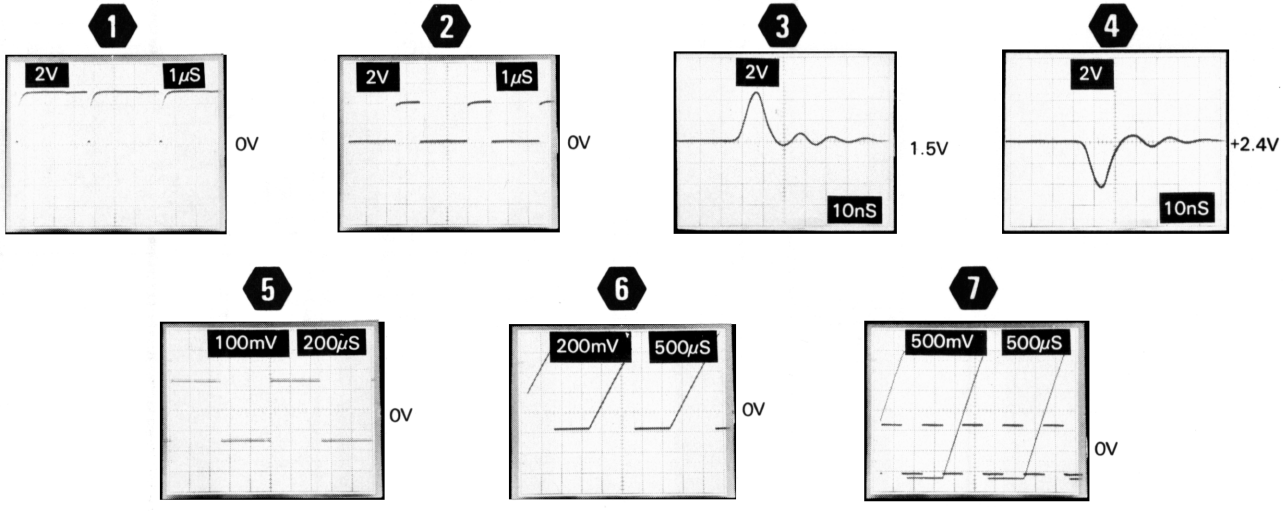

Selectable Electrical Parts Table
For Diagram 20.

Component Number	Reason For Selection	Component Value
A25R248	Affects the first 3 ns of high-frequency transient response. Increasing the resistance lowers the front corner and vice-versa.	220Ω 240Ω 270Ω
A25R250	Affects first 1 ns of high-frequency transient response. Decreasing the resistance raises the front corner and vice-versa.	91Ω 36Ω 18Ω 8.2Ω
A25C264	Affects Unity Dot response. Increasing the capacitance lowers the first 3.5 μs of the vertical transient response.	0.5pF 1.0pF 1.5pF

http://manoman.sqhill.com

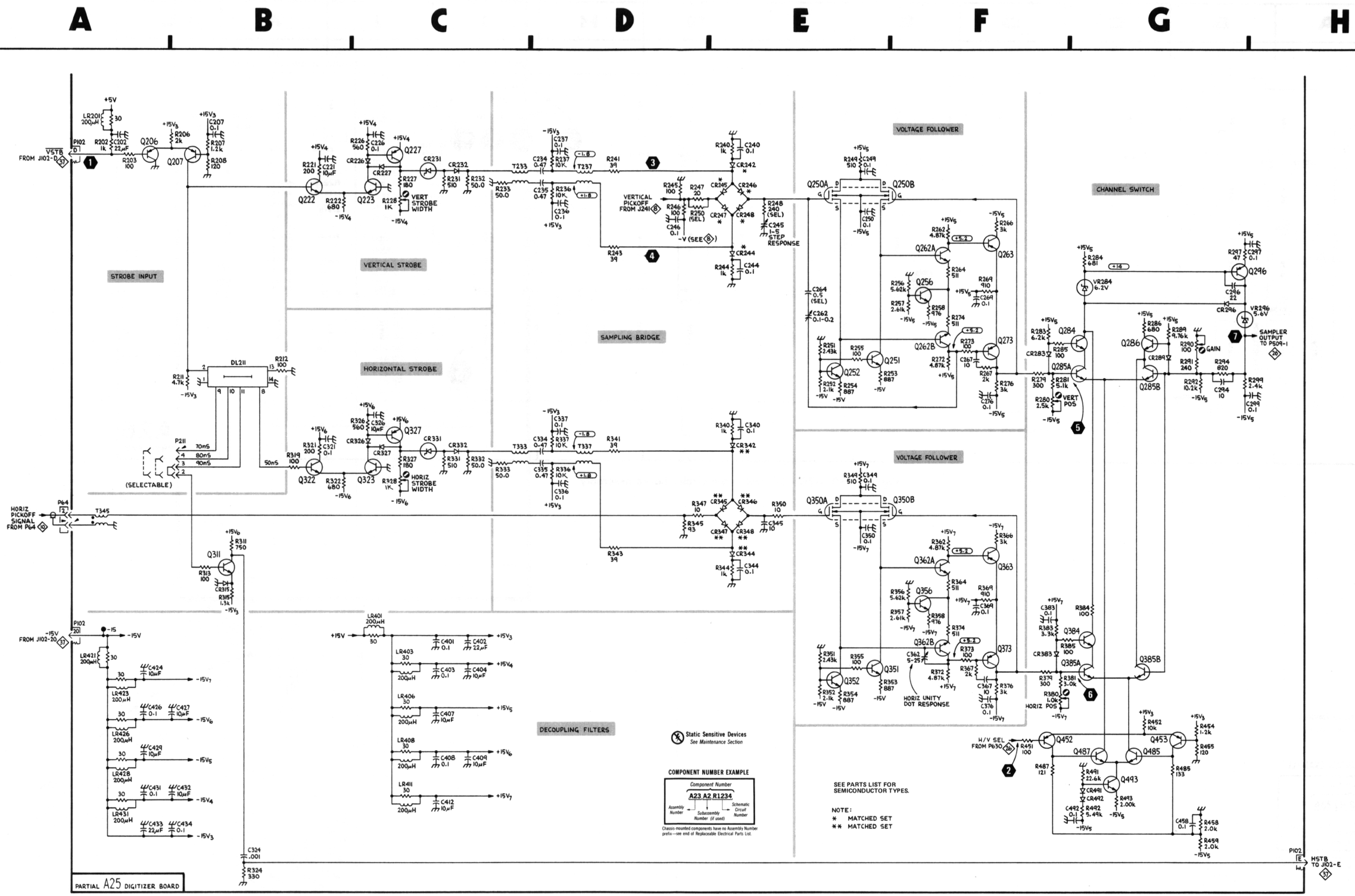

http://manoman.sc...com

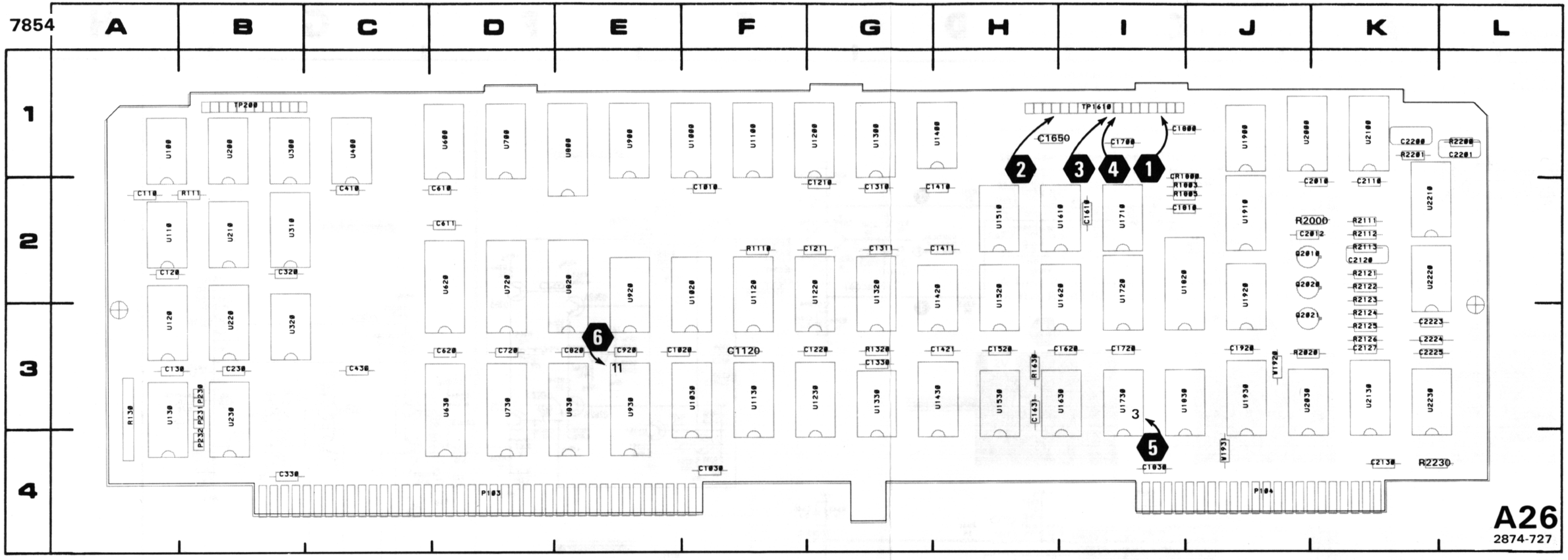

Figure 7-30. A26—Control Logic circuit board assembly.

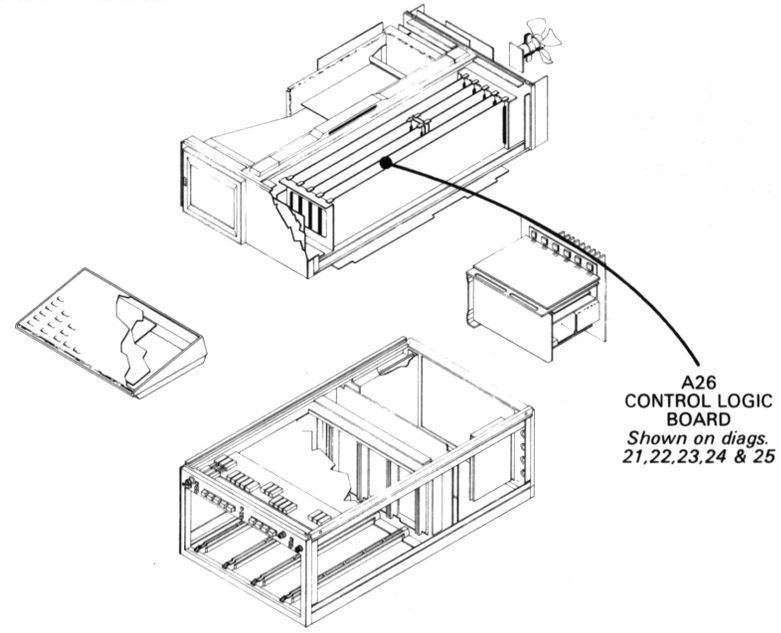

http://manoman.sqhill.com

DIGITIZER CONTROL LOGIC DIAGRAM 21

PARTIAL A26 ASSY

CIRCUIT NUMBER	SCHEM LOCATION	BOARD LOCATION
C120	A4	A2
C130	A4	A3
C230	A4	B3
C320	A4	B2
C330	A4	B4
C410	A4	C2
C430	A4	C3
C610	A4	D2
C611	A4	D2
C620	A4	D3
C720	A4	D3
C820	A4	E3
C920	A4	E3
C1010	A4	F2
C1020	A4	E3
C1030	A4	F4
C1120	A4	F3
C1210	A4	G2
C1211	A4	G2
C1220	A4	G3
C1310	A4	G2
C1311	A4	G2
C1330	E2	G3
C1410	A4	G2
C1411	A4	H1
C1421	A4	H3
C1520	A4	H3
C1600	A4	I3
C1620	A4	I3
C1700	A4	I1
C1720	A4	I3
C1810	A4	I2
C1830	A4	I4
C1920	A4	J3
C2010	A4	K2
C2012	A4	J2
C2110	A4	K2
C2130	A4	K4
C2225	A4	K3
C2230	A4	K4
P103	A1	D4
P103	G2	D4
P104	A4	J4
P104	F1	J4
P104	G1	J4
P104	G5	J4
R1320	E2	G3
TP1610	B5	I1
TP1610	D3	I1
TP1610	E3	I1
TP1610	G2	I1
TP1610	G1	I1
TP1610	G2	I1
TP1610	G1	I1
TP1610	G2	I1
U830	E3	E3
U930	E2	E3
U1030	C4	F3
U1130	C3	F3
U1220	B2	G2
U1230	C1	G3
U1320	C2	G2
U1330B	E2	G3
U1330C	E2	G3
U1420A	E2	H1
U1420B	C1	H1
U1430A	F2	H3
U1430E	F3	H3
U1430F	F3	H3
U1510A	C1	H1
U1510B	C3	H1
U1520A	B4	H1
U1520B	E2	H1
U1530C	D3	H3
U1530D	B3	H3
U1620B	F1	I2
U1620D	D3	I2
U1630D	D2	I3
U1730A	G2	I3
U1730B	F2	I3
U1930	F1	J3
W1931	F1	J4

Partial A26 ASSY also shown on diagrams 22, 23, 24 and 25.

http://manoman.sqhill.com

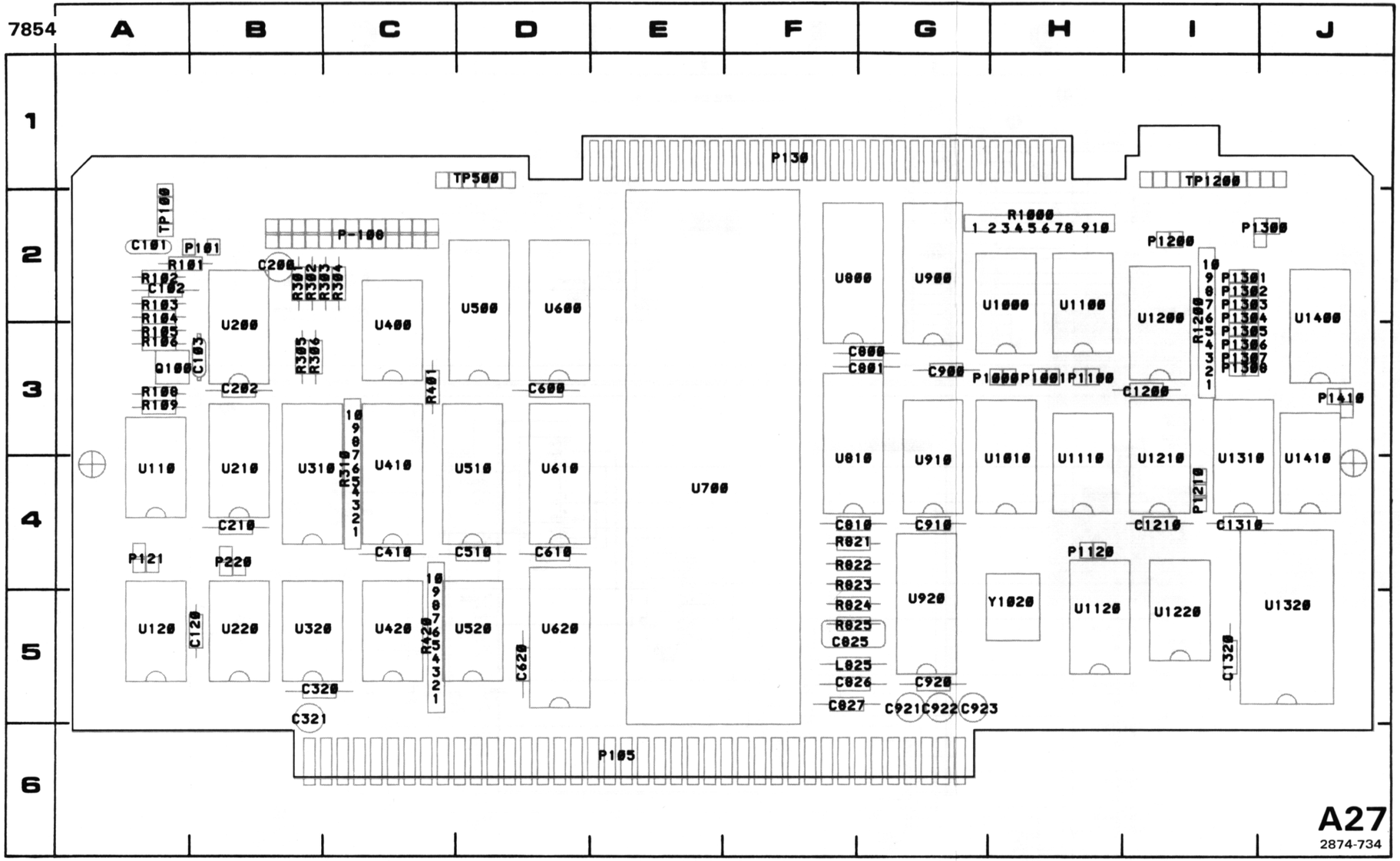

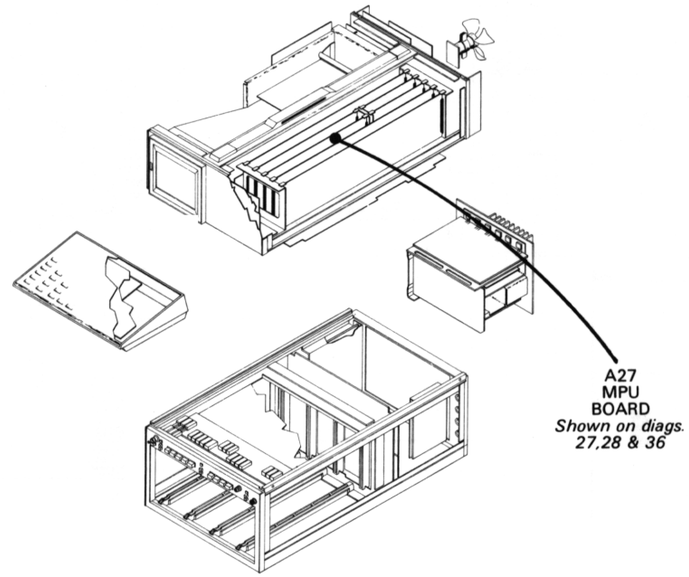

Figure 7-37. A27—MPU circuit board assembly.

http://manoman.sqhill.com

WAVEFORM CONDITIONS

The waveforms shown were taken with the 7854 controls set as follows: CRT DISPLAY (SCOPE); TRIGGER SOURCE (VERT MODE); VERTICAL MODE (LEFT); HORIZONTAL MODE (B); READOUT INTENSITY (MIDRANGE).

Waveform Conditions. The waveforms shown below were obtained using a test oscilloscope system with 10 MΩ input impedance, at least 60 MHz bandwidth and 10X probe (Tektronix 7603 Oscilloscope, 7B92 Time Base, 7A13 Differential Comparator and P6063A Probe).

A Tektronix 7A26 Dual Trace Amplifier with controls set as follows: VOLTS/DIV (0.1 V); DISPLAY MODE (CH1); was installed in the LEFT VERT compartment of the 7854.

The 0.4 V CALIBRATOR signal was applied to the channel 1 bnc connector.

A Tektronix 7B15 Time Base with controls set as follows: TRIGGERING (NORM, AC, INT); TIME/DIV (1 ms); was installed in the B HORIZ compartment of the 7854.

Waveform 4 conditions: 7B15 TIME/DIV (500 μs).

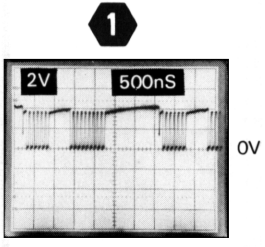

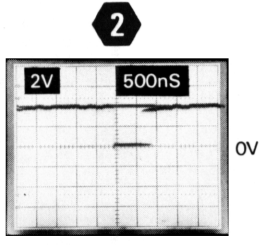

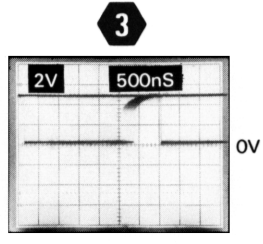

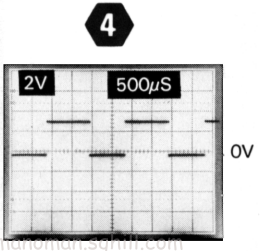

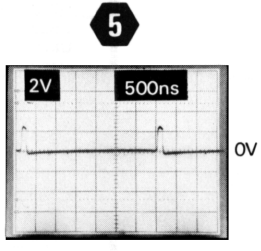

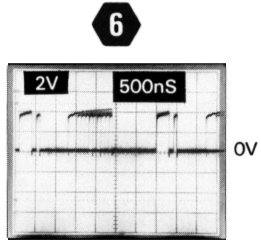

http://manoman.sqhn.com

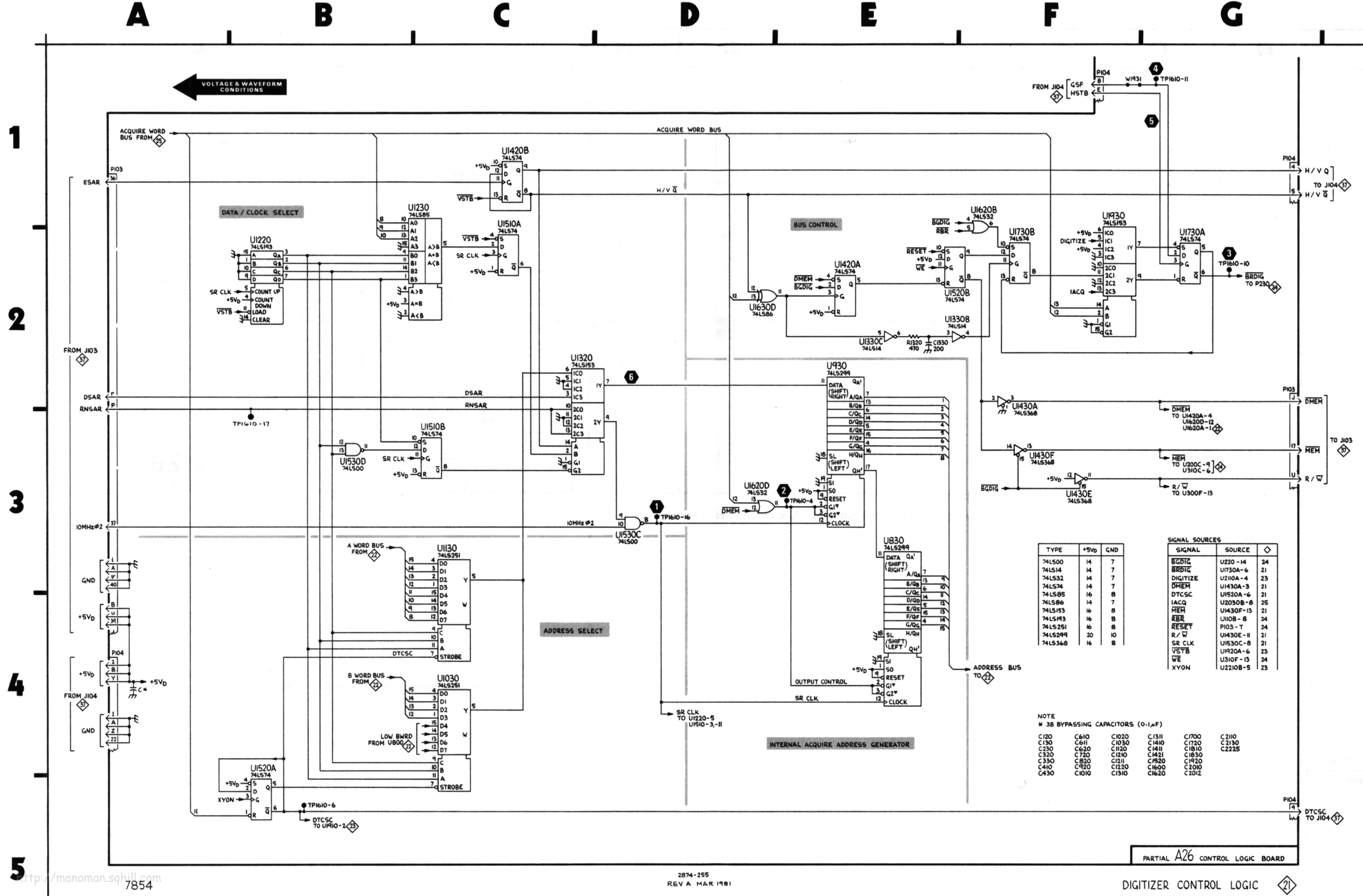

http://manoman.sqhill.com

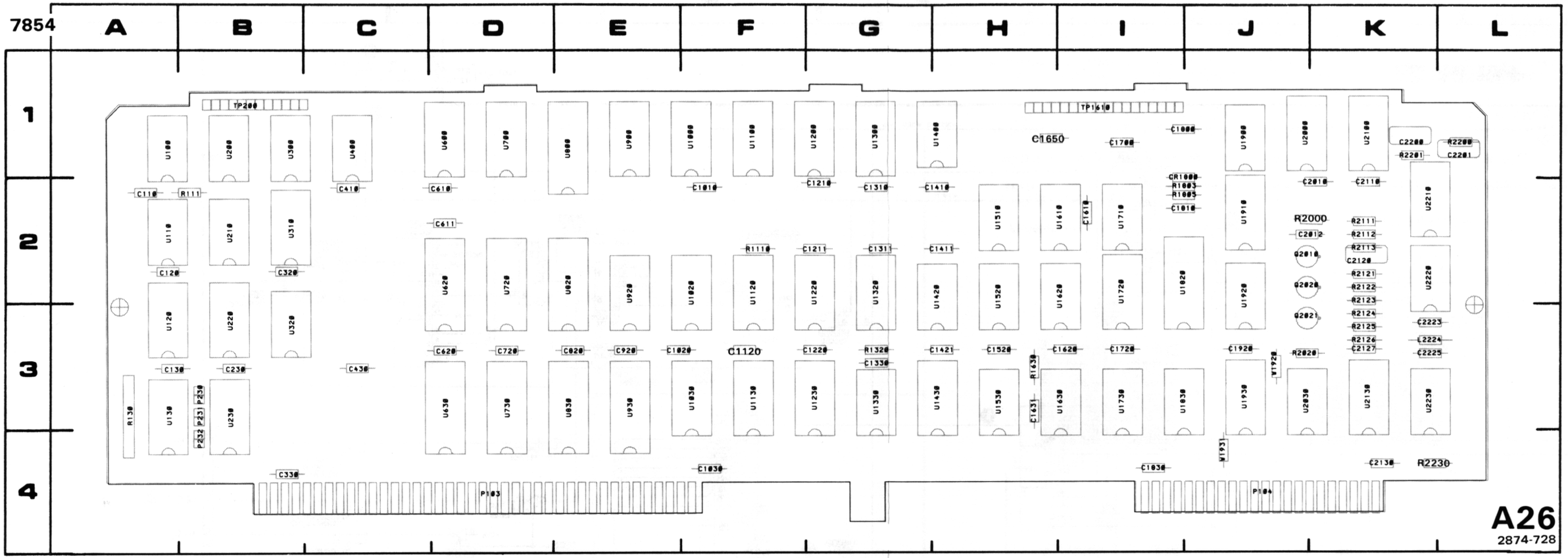

Figure 7-31. A26—Control Logic circuit board assembly.

REV A MAR 1981

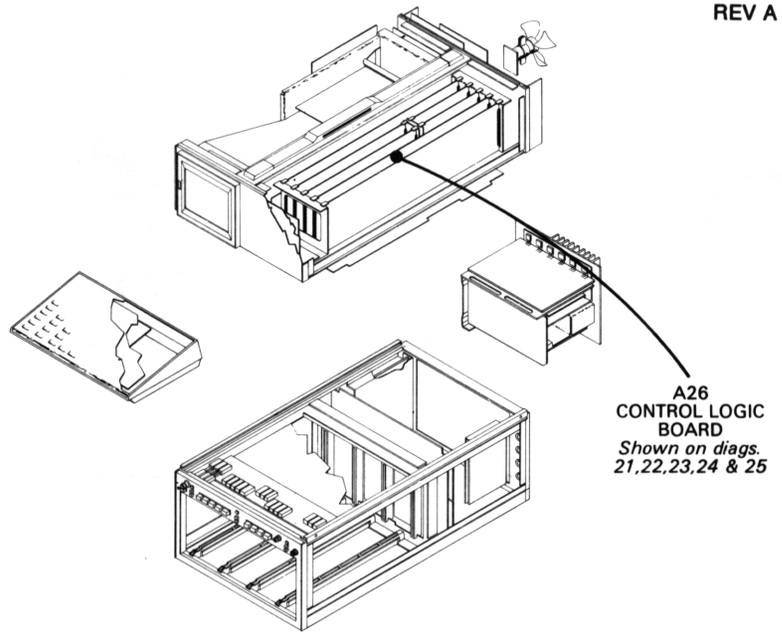

Static Sensitive Devices
See Maintenance Section

COMPONENT NUMBER EXAMPLE

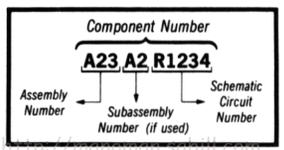

Chassis-mounted components have no Assembly Number prefix—see end of Replaceable Electrical Parts List.

ADDRESS GENERATOR DIAGRAM 22

PARTIAL A26 ASSY

CIRCUIT NUMBER	SCHEM LOCATION	BOARD LOCATION
C1631	D4	H3
P103	A1	D4
P103	A3	D4
P103	H2	D4
P103	H5	D4
R1110	F3	F2
R1630	C4	H3
TP200	A5	B1
TP200	F5	B1
TP1610	A3	I1
TP1610	F4	I1
U200A	A3	B1
U200B	A4	B1
U300B	B2	B1
U300C	A2	B1
U300E	A4	B1
U300F	A3	B1
U320A	F5	B3
U400A	E2	C1
U400B	E2	C1
U400C	B2	C1
U400D	A2	C1
U600	B1	D1
U620	C1	D2
U630	B1	D3
U700	C4	D1
U720	B4	D2
U730	C3	D3
U800	E1	E1
U820	G4	E2
U900	F1	E1
U920	G3	E2
U1020	G3	F2
U1120	F4	F2
U1200	B3	G1
U1300	B2	G1
U1400B	E4	H1
U1400D	E3	H1
U1430B	D3	H3
U1620A	E3	I2
U1630B	G5	I3
U1630C	D4	I3
U1720	B4	I2
U1830B	E3	I3

Partial A26 ASSY also shown on diagrams 21, 23, 24 and 25.

http://manoman.sqhit.com

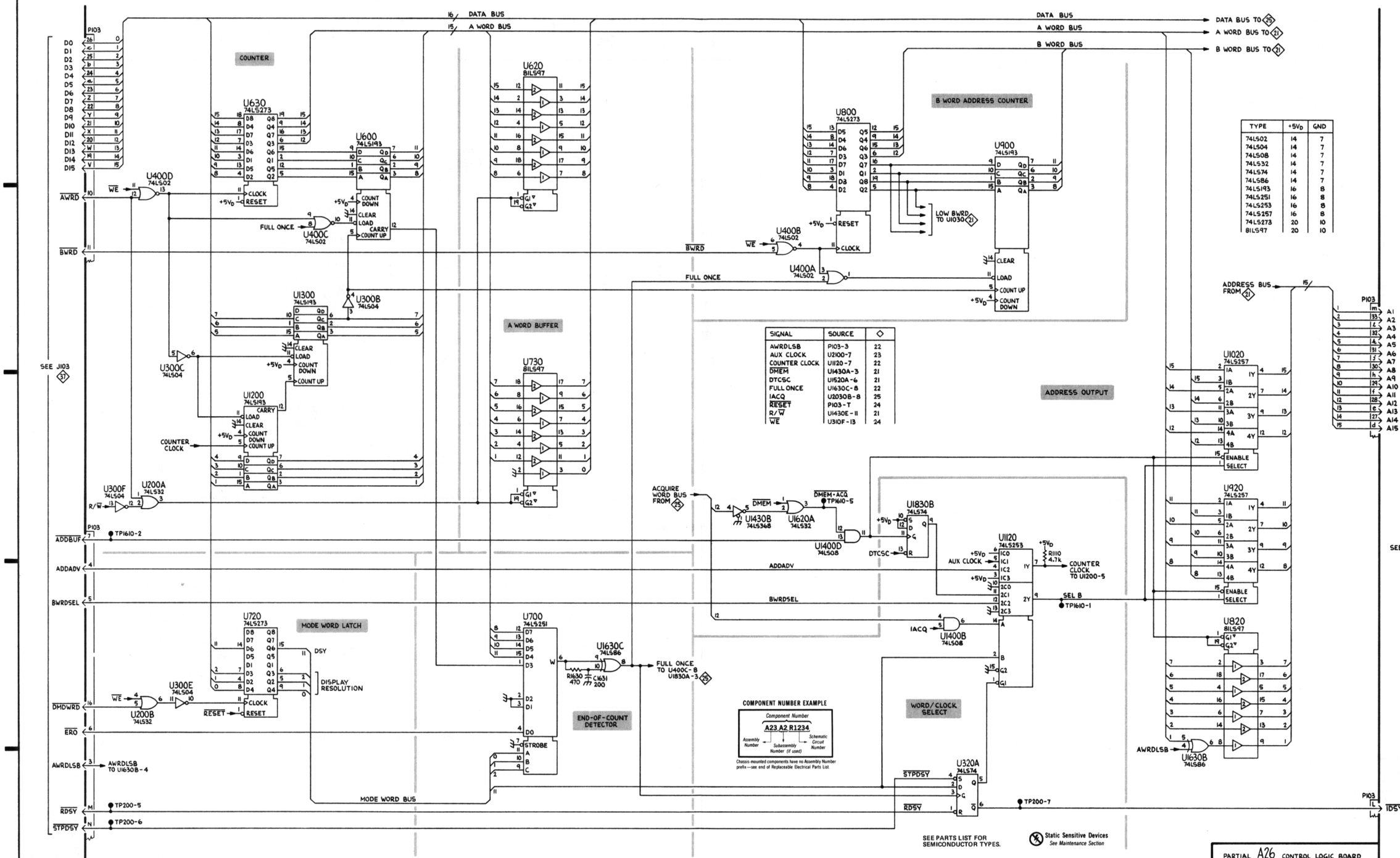

SIGNAL	SOURCE	◇
AWRDLSB	P103-3	22
AUX CLOCK	U2100-7	23
COUNTER CLOCK	U1120-7	22
DMEM	U1430A-3	21
DTCSC	U1520A-6	21
FULL ONCE	U1630C-8	22
IACQ	U2030B-8	25
RESET	P103-T	24
R/W	U1430E-11	21
WE	U310F-13	24

TYPE	+5V$_D$	GND
74LS02	14	7
74LS04	14	7
74LS08	14	7
74LS32	14	7
74LS74	14	7
74LS86	14	7
74LS193	16	8
74LS251	16	8
74LS253	16	8
74LS257	16	8
74LS273	20	10
81LS97	20	10

COMPONENT NUMBER EXAMPLE

Component Number: A23 A2 R1234
(Assembly Number · Subassembly Number (if used) · Schematic Circuit Number)

Chassis-mounted components have no Assembly Number prefix—see end of Replaceable Electrical Parts List.

http://manoman.sq1.com

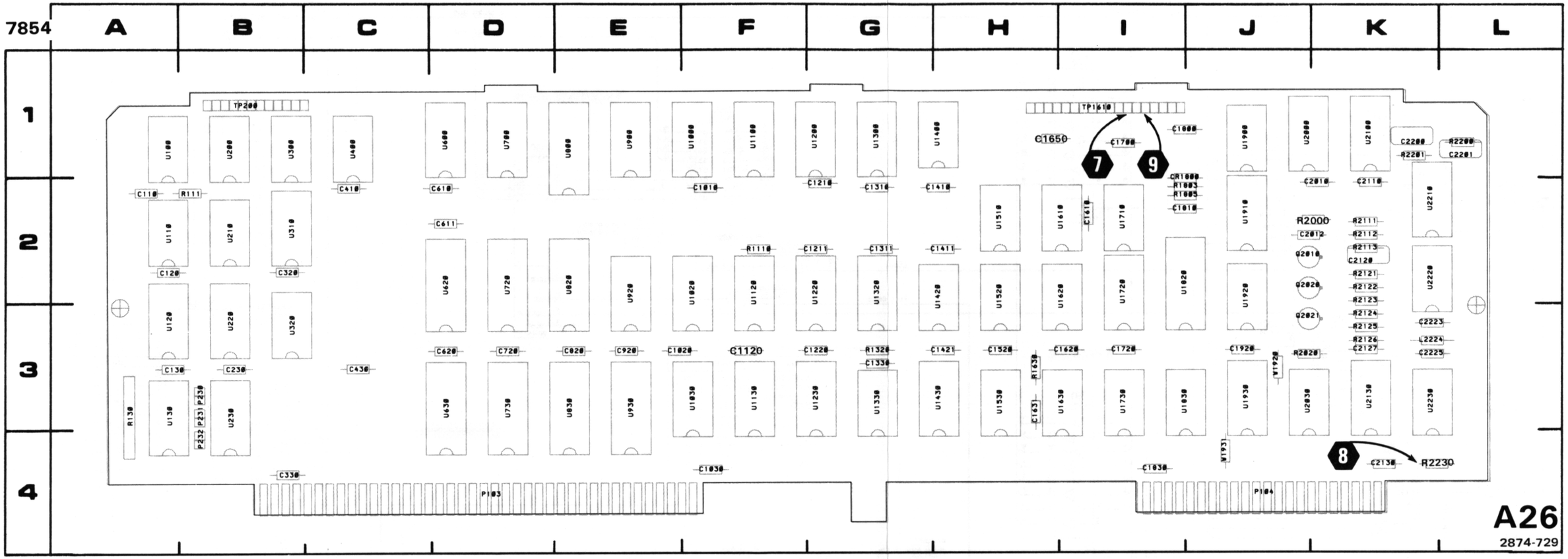

REV A MAR 1981

Figure 7-32. A26—Control Logic circuit board assembly.

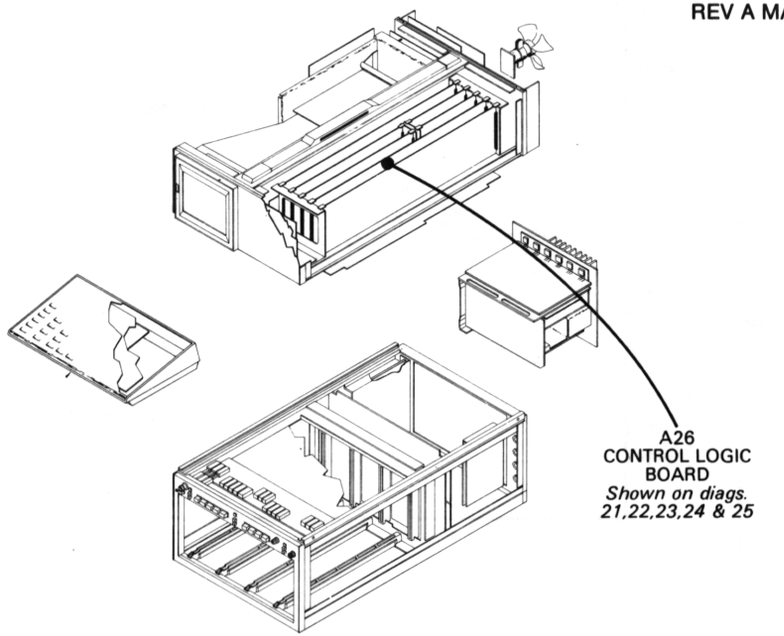

Static Sensitive Devices
See Maintenance Section

COMPONENT NUMBER EXAMPLE

Component Number

A23 A2 R1234

Assembly Number — *Subassembly Number (if used)* — *Schematic Circuit Number*

Chassis-mounted components have no Assembly Number prefix—see end of Replaceable Electrical Parts List.

DIGITIZER CLOCK DIAGRAM 23

PARTIAL A26 ASSY

CIRCUIT NUMBER	SCHEM LOCATION	BOARD LOCATION
C1800	C3	I1
C2120	F3	K2
C2127	F3	K3
C2200	C1	K1
C2201	C3	L1
C2223	A3	K3
CR1800	C3	I2
L2224	A3	K3
P103	G2	D4
P104	A1	J4
P104	A3	J4
P104	G3	J4
Q2010	F3	J2
Q2020	F3	J2
Q2021	F3	J3
R1803	C3	I2
R1805	C3	I2
R2000	A1	J2
R2111	F3	K2
R2112	F2	K2
R2113	F3	K2
R2121	F3	K2
R2122	F3	K2
R2123	F3	K2
R2124	F2	K3
R2125	F3	K3
R2126	F3	K3
R2200	C3	L1
R2201	C1	K1
R2230	C3	K4
TP1610	A1	I1
TP1610	E3	I1
TP1610	G2	I1
U1900A	D1	J1
U1900B	G2	J1
U1900C	D2	J1
U1900D	C3	J1
U1910A	C1	J2
U1910B	D3	J2
U1920A	E2	J2
U1920B	E3	J2
U2000	A1	J1
U2030A	E2	J3
U2100	B1	K1
U2130	E1	K3
U2210A	C2	K2
U2210B	C3	K2
U2230	B2	K3
W1920	C2	J3

Partial A26 ASSY also shown on diagrams 21, 22, 24 and 25.

http://manoman.sqhill.com

WAVEFORM CONDITIONS

The waveforms shown were taken with the 7854 controls set as follows: CRT DISPLAY (SCOPE); TRIGGER SOURCE (VERT MODE); VERTICAL MODE (LEFT); HORIZONTAL MODE (B); READOUT INTENSITY (MIDRANGE).

Waveform Conditions. The waveforms shown below were obtained using a test oscilloscope system with 10 MΩ input impedance, at least 60 MHz bandwidth and 10X probe (Tektronix 7603 Oscilloscope, 7B92 Time Base, 7A13 Differential Comparator and P6063A Probe).

A Tektronix 7A26 Dual Trace Amplifier with controls set as follows: VOLTS/DIV (0.1 V); DISPLAY MODE (CH1); was installed in the LEFT VERT compartment of the 7854.

The 0.4 V CALIBRATOR signal was applied to the channel 1 bnc connector.

A Tektronix 7B15 Time Base with controls set as follows: TRIGGERING (NORM, AC, INT); TIME/DIV (1 ms); was installed in the B HORIZ compartment of the 7854.

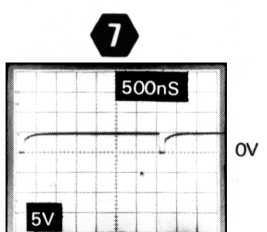

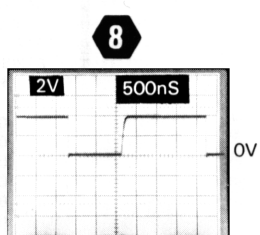

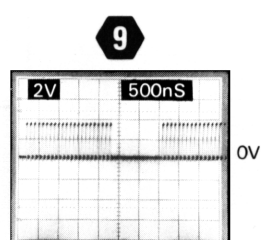

http://manoman.sqhill.com

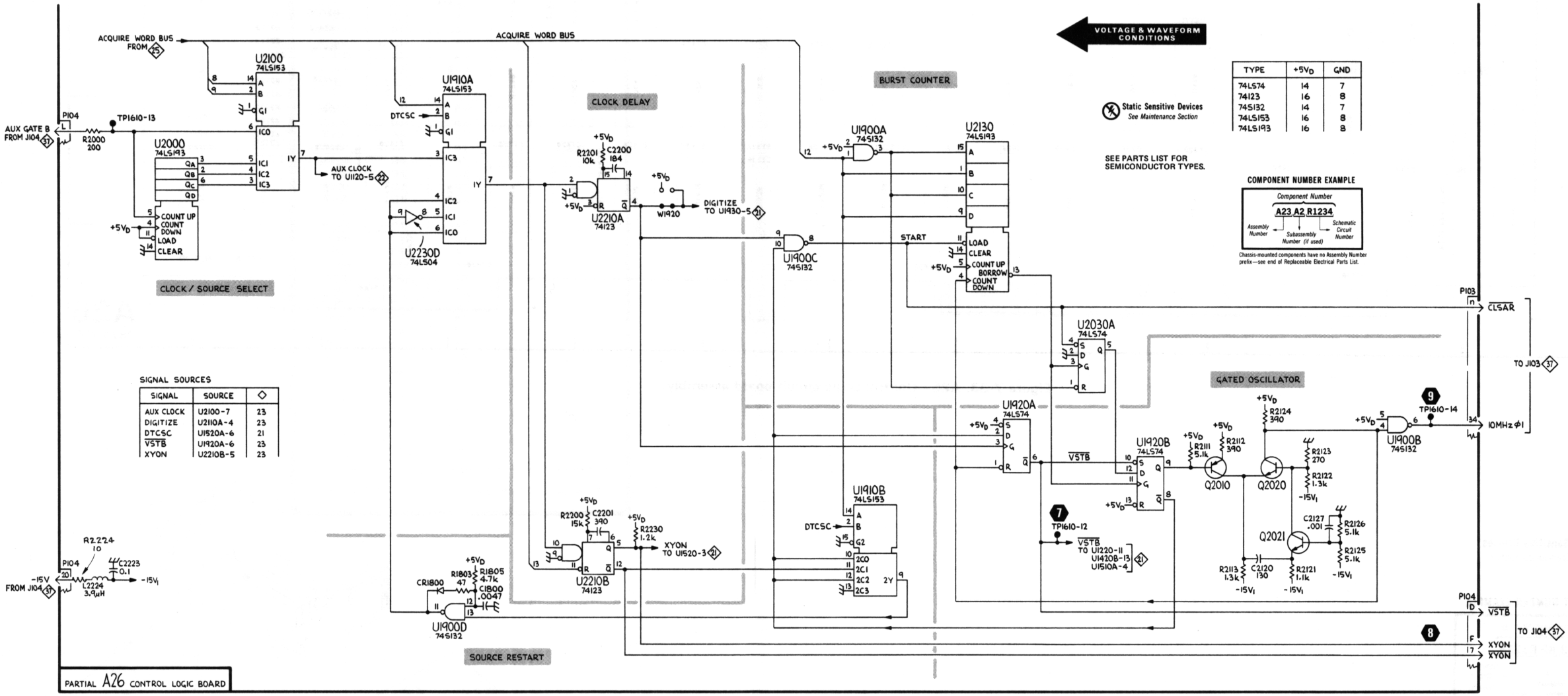

http://manoman.sqhi.com

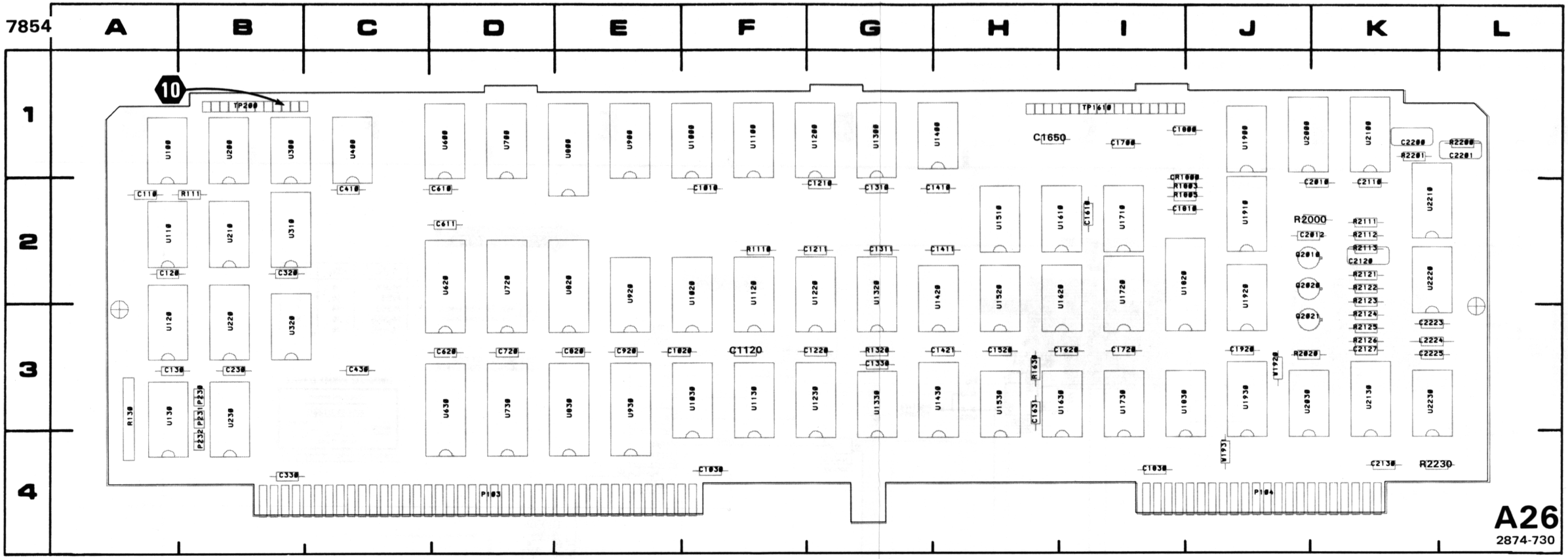

REV A MAR 1981

Figure 7-33. A26—Control Logic circuit board assembly.

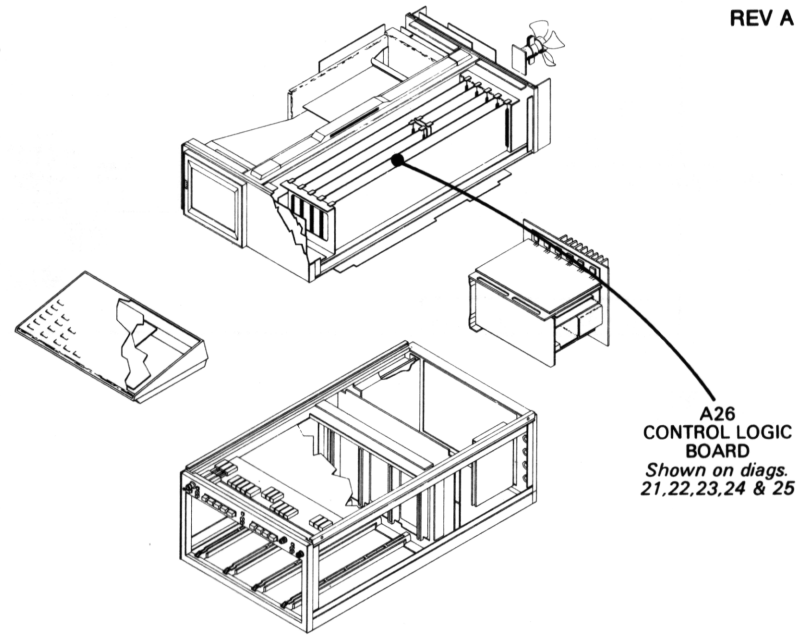

Static Sensitive Devices
See Maintenance Section

COMPONENT NUMBER EXAMPLE

Component Number
A23,A2,R1234
Assembly Number — *Subassembly Number (if used)* — *Schematic Circuit Number*

Chassis-mounted components have no Assembly Number prefix—see end of Replaceable Electrical Parts List.

http://manoman.sqhill.com

DMA CONTROL DIAGRAM 24

PARTIAL A26 ASSY

CIRCUIT NUMBER	SCHEM LOCATION	BOARD LOCATION
C110	D4	A2
P103	A1	D4
P103	H1	D4
P230	B1	B3
P231	B1	B3
P232	B2	B4
R111	D4	B2
R130A	B1	A3
R130B	B1	A3
R130C	C1	A3
R130D	C2	A3
R130E	B2	A3
R130F	C2	A3
TP200	A1	B1
TP200	A2	B1
TP200	A4	B1
TP200	B3	B1
TP200	G5	B1
TP200	G4	B1
TP200	G2	B1
TP200	G1	B1
U100A	C4	A1
U100B	E3	A1
U100C	E4	A1
U110A	F4	A2
U110B	D5	A2
U120	D1	A3
U130	C1	A3
U200C	B3	B1
U210B	B3	B2
U220	G1	B3
U230	F1	B3
U300A	D2	B1
U300D	E4	B1
U310A	D4	B2
U310B	B4	B2
U310C	B4	B2
U310F	F4	B2
U320B	C4	B3

Partial A26 ASSY also shown on diagrams 21, 22, 23 and 25.

http://manoman.sqhill.com

WAVEFORM CONDITIONS

The waveforms shown were taken with the 7854 controls set as follows: CRT DISPLAY (SCOPE); TRIGGER SOURCE (VERT MODE); VERTICAL MODE (LEFT); HORIZONTAL MODE (B); READOUT INTENSITY (MIDRANGE).

Waveform Conditions. The waveforms shown below were obtained using a test oscilloscope system with 10 MΩ input impedance, at least 60 MHz bandwidth and 10X probe (Tektronix 7603 Oscilloscope, 7B92 Time Base, 7A13 Differential Comparator and P6063A Probe).

A Tektronix 7A26 Dual Trace Amplifier with controls set as follows: VOLTS/DIV (0.1 V); DISPLAY MODE (CH1); was installed in the LEFT VERT compartment of the 7854.

The 0.4 V CALIBRATOR signal was applied to the channel 1 bnc connector.

A Tektronix 7B15 Time Base with controls set as follows: TRIGGERING (NORM, AC, INT); TIME/DIV (500 μs); was installed in the B HORIZ compartment of the 7854.

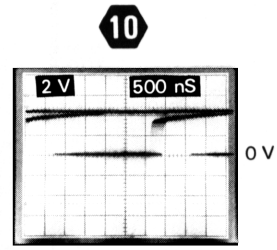

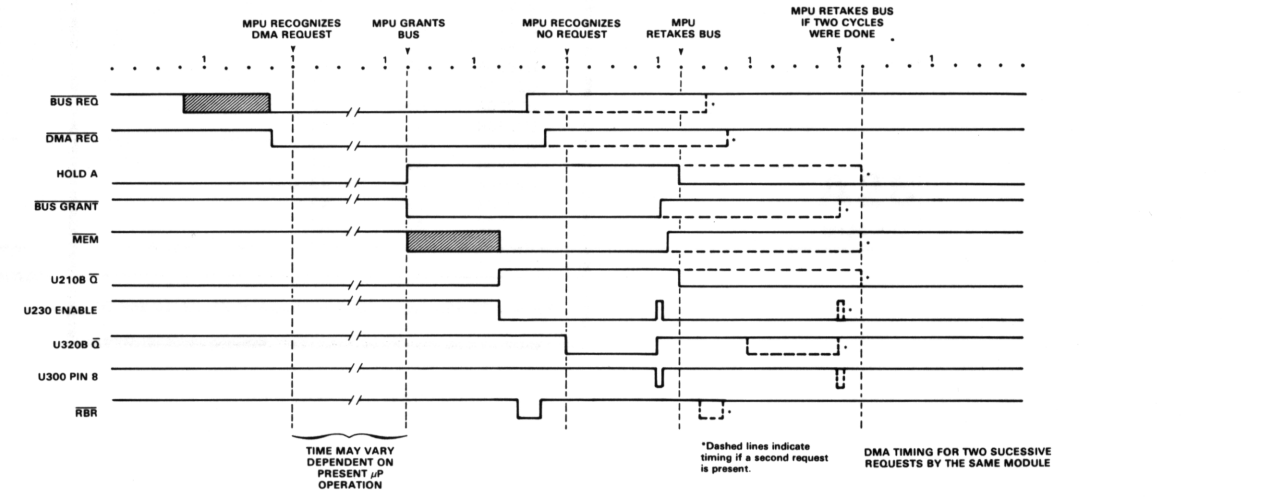

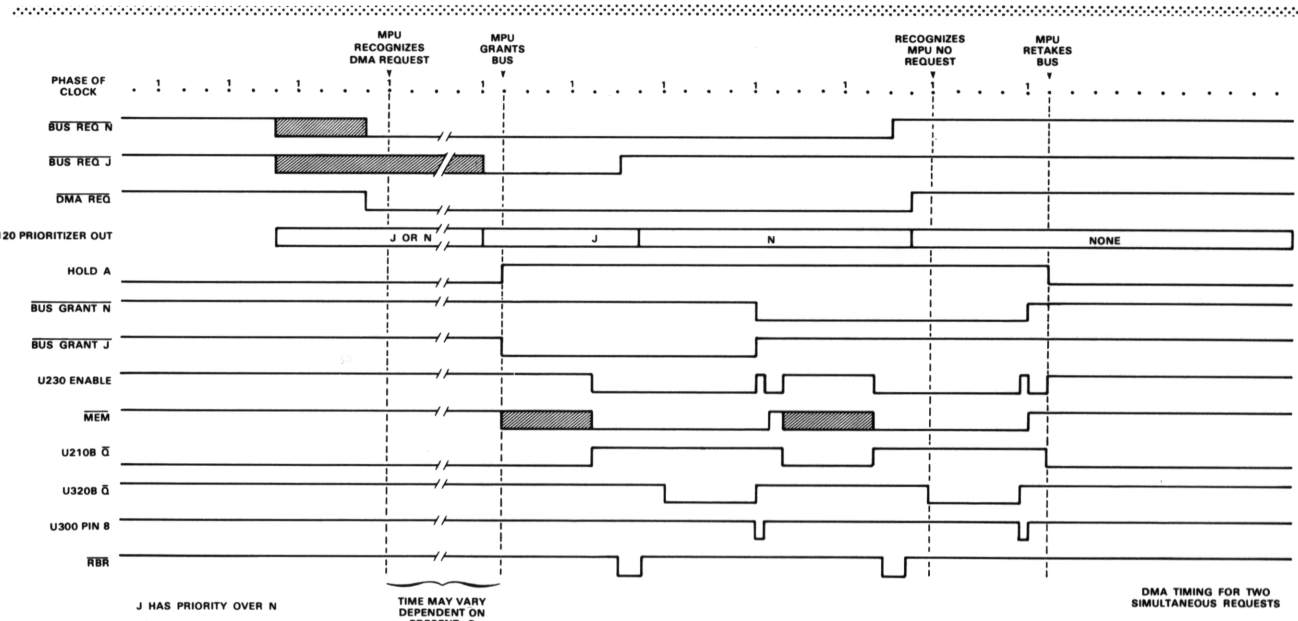

Figure 7-34. DMA Timing Diagram.

2874-731

http://manoman.sqhill.com

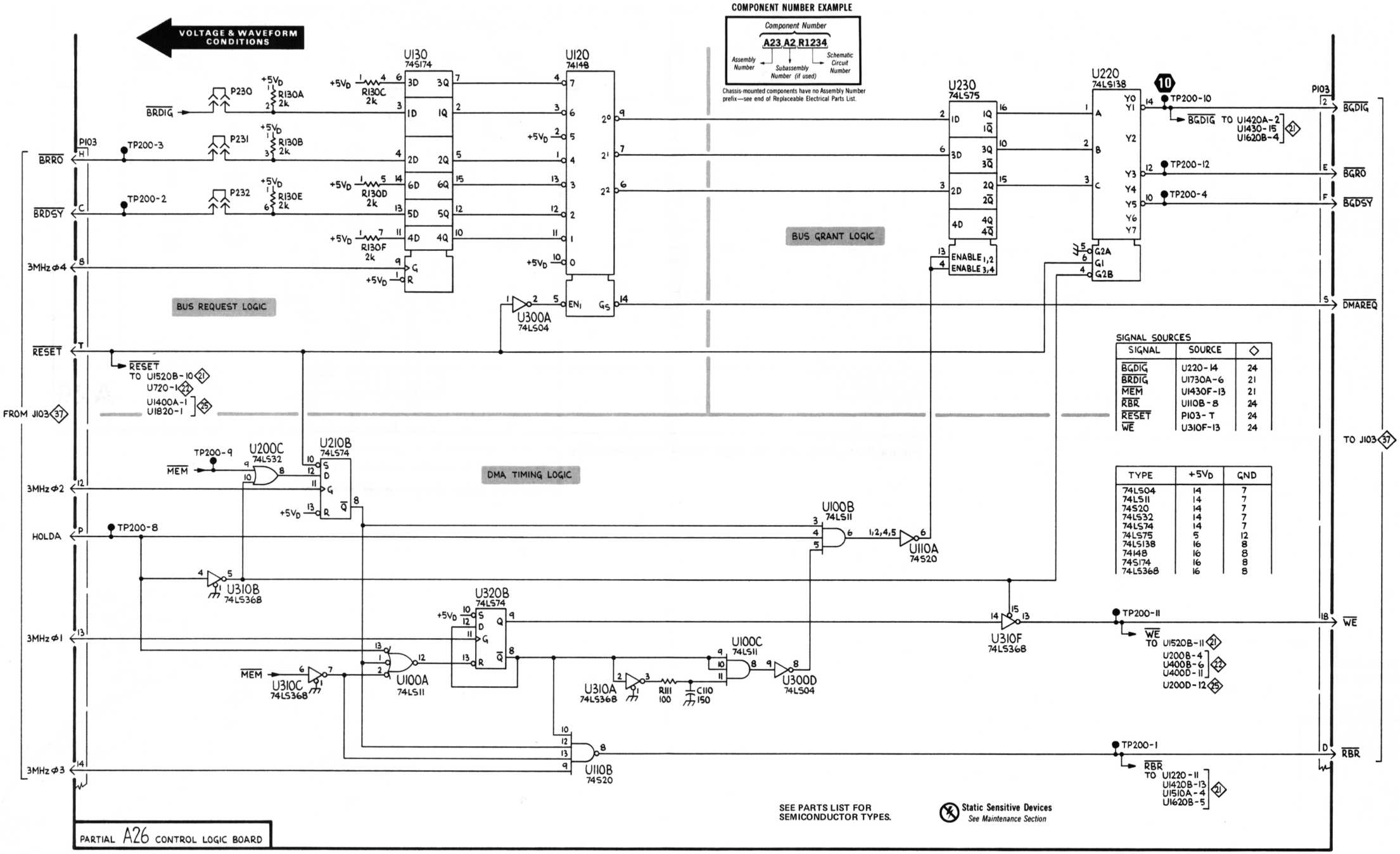

http://manoman.sqhk.com

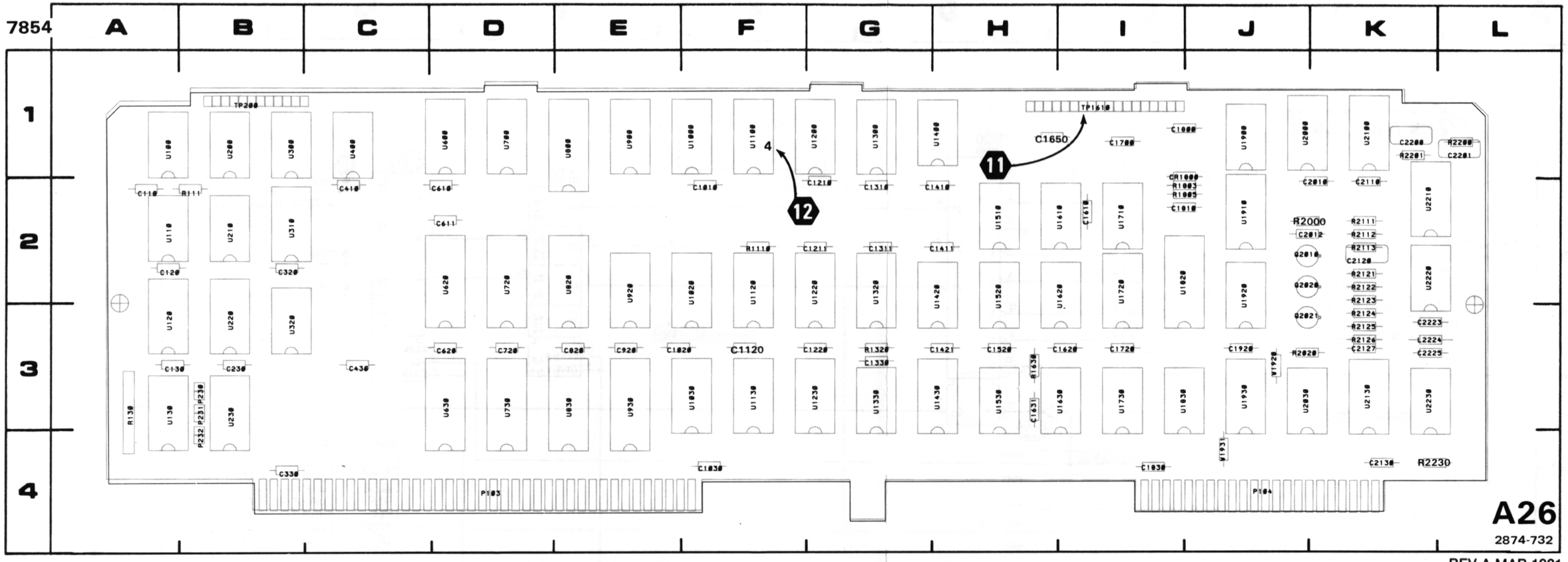

REV A MAR 1981

Figure 7-35. A26—Control Logic circuit board assembly.

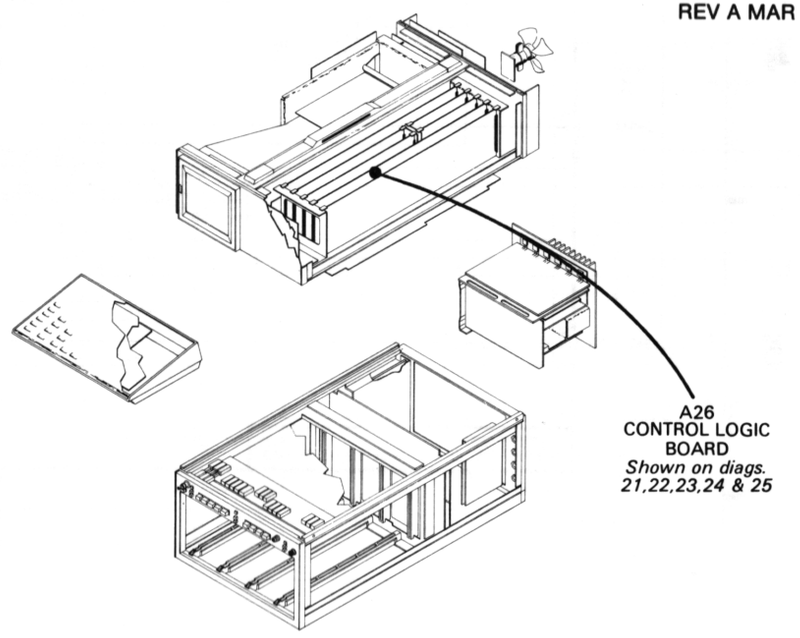

Static Sensitive Devices
See Maintenance Section

COMPONENT NUMBER EXAMPLE

Component Number
A23 A2 R1234
Assembly Number — *Subassembly Number (if used)* — *Schematic Circuit Number*

Chassis-mounted components have no Assembly Number prefix—see end of Replaceable Electrical Parts List.

DIGITIZER SWEEP COUNTER DIAGRAM 25

PARTIAL A26 ASSY

CIRCUIT NUMBER	SCHEM LOCATION	BOARD LOCATION
C1610	D2	I2
P103	A1	D4
P103	F3	D4
P104	A1	J4
P104	A3	J4
R2020	B3	J3
TP1610	A2	I1
TP1610	A1	I1
TP1610	C3	I1
U200D	B1	B1
U1000	D2	F1
U1100	D1	F1
U1400A	C3	H1
U1530B	B3	H3
U1610A	C2	I2
U1610B	C2	I2
U1710A	C3	I2
U1710C	D3	I2
U1720	B1	I2
U1820	E1	I2
U1830A	C2	I3
U2030B	E3	J3
U2220A	A1	K2
U2220B	A1	K2
U2220C	A2	K2
U2220D	A2	K2
U2230A	C2	K3
U2230B	C2	K3
U2230C	A3	K3
U2230F	D1	K3

Partial A26 ASSY also shown on diagrams 21, 22, 23 and 24.

http://manoman.sqhill.com

WAVEFORM CONDITIONS

The waveforms shown were taken with the 7854 controls set as follows: CRT DISPLAY (SCOPE); TRIGGER SOURCE (VERT MODE); VERTICAL MODE (LEFT); HORIZONTAL MODE (B); READOUT INTENSITY (MIDRANGE).

Waveform Conditions. The waveforms shown below were obtained using a test oscilloscope system with 10 MΩ input impedance, at least 60 MHz bandwidth and 10X probe (Tektronix 7603 Oscilloscope, 7B92 Time Base, 7A13 Differential Comparator and P6063A Probe).

11

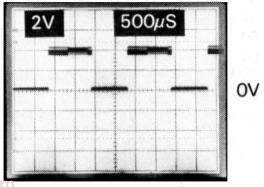

12

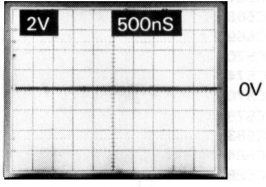

http://manoman.sqhill.com

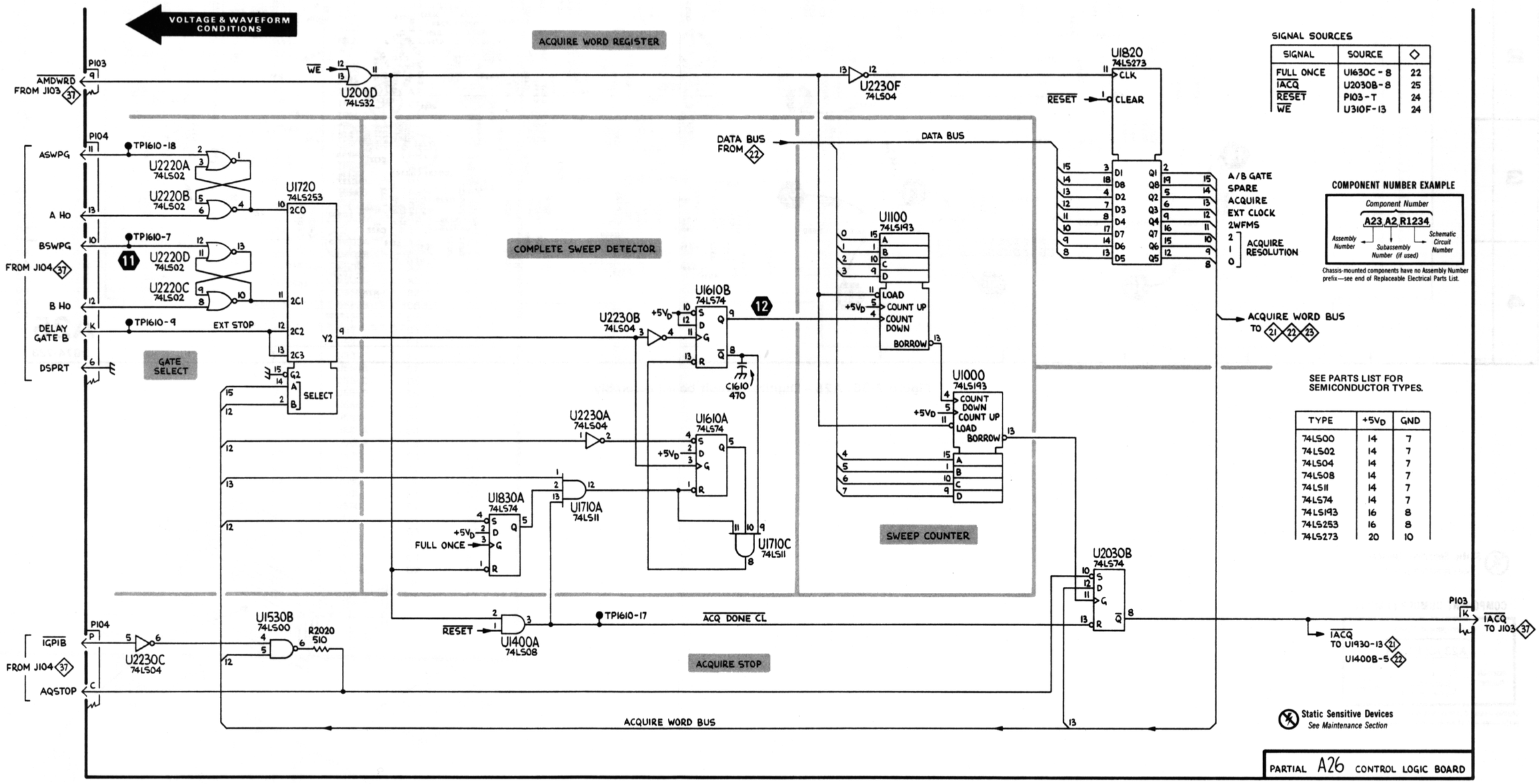

http://manoman.sqhill.com

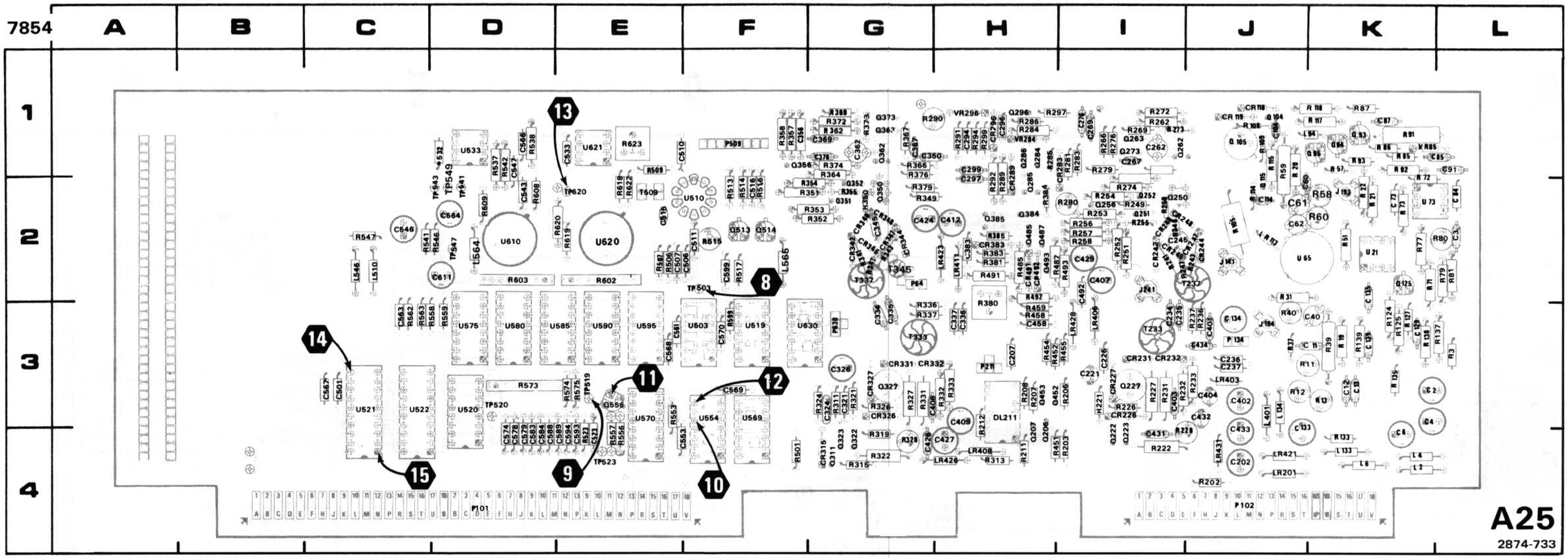

Figure 7-36. A25—Digitizer circuit board assembly.

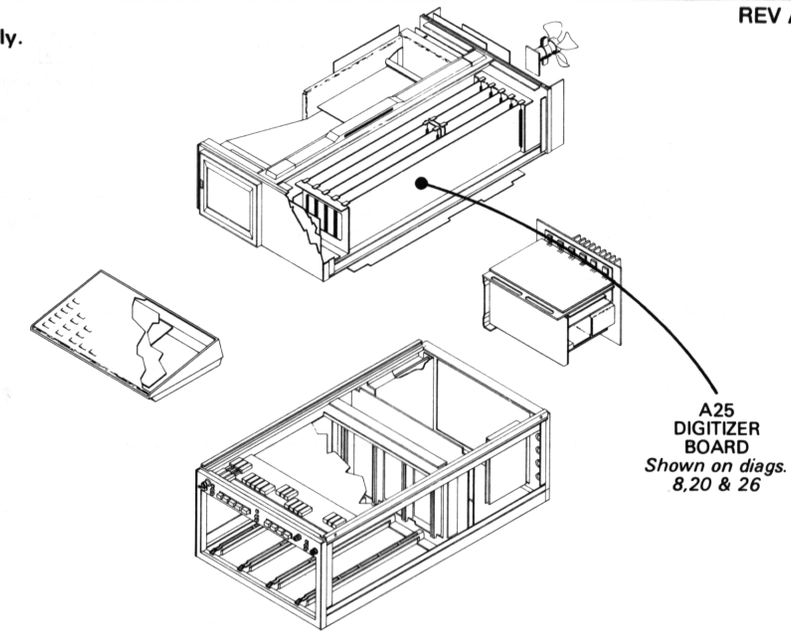

Static Sensitive Devices
See Maintenance Section

COMPONENT NUMBER EXAMPLE

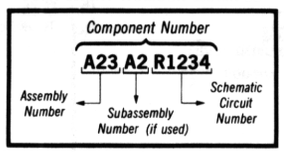

Chassis-mounted components have no Assembly Number prefix—see end of Replaceable Electrical Parts List.

http://manoman.sqhill.com

DIGITIZER DIAGRAM 26

PARTIAL A25 ASSY

CIRCUIT NUMBER	SCHEM LOCATION	BOARD LOCATION
C501	A1	C3
C506	A2	F2
C507	B2	E2
C510	B1	E1
C511	B2	F2
C515	B2	E2
C516	C1	F2
C523	C1	E4
C533	F1	E1
C543	F1	D2
C546	F1	C2
C547	F1	D1
C553	C2	F4
C561	A3	E3
C563	B3	C3
C564	A4	D2
C566	A4	D1
C567	A5	C3
C568	A5	E3
C569	A5	F3
C570	A5	F3
C574	D3	D4
C578	D3	D4
C579	D3	D4
C583	D3	D4
C584	D3	D4
C588	D4	D4
C589	D4	D4
C593	D4	E4
C594	D4	E4
C599	E5	F2
C611	G3	D2
L510	B1	C2
L546	F1	C2
L564	A4	D2
L565	A4	F2
P101	A1	D4
P101	A2	D4
P101	A4	D4
P101	G1	D4
P101	G5	D4
P102	A1	J4
P102	A4	J4
P509	A1	F1
P630	F5	G3
Q513	C1	F2
Q514	C2	F2
Q556	C2	E3
R501	A1	F4
R502	A1	F1
R503	A1	F1
R504	A2	F1
R506	A2	E2
R507	A2	E2
R509	A1	E1
R513	B1	F2
R514	B1	F2
R515	B1	F2
R516	C1	F2
R517	C1	F2
R523	C1	E4
R532	F1	D1
R537	F1	D1
R538	F1	D1
R541	F1	C2
R542	F1	D1
R546	F1	D2
R547	F1	C2
R553	C2	E3
R556	C2	E4
R557	C2	E4
R558	D2	C3
R559	D2	D3
R562	B3	C3
R563	B3	C3
R573A	D3	D3
R573B	D3	D3
R573C	D3	D3
R573D	D3	D3
R573E	D3	D3
R573F	D4	D3
R573G	D4	D3
R574	D4	E3
R575	D4	E3
R599	E5	F3
R602A	G2	E2
R602B	G3	E2
R602C	G3	E2
R602D	G3	E2
R602E	G3	E2
R603A	G3	D2
R603B	F4	D2
R603C	F4	D2
R603D	F4	D2
R603E	F4	D2
R608	G2	D2
R609	G2	D2
R618	G4	E2
R619	G3	E2
R620	G3	D2
R622	G4	E2
R623	G4	E1
T509	B1	E2
TP503	A2	F2
TP519	C1	E3
TP520	D1	D3
TP523	C1	E4
TP541	F1	D2
TP543	F1	D2
TP547	G1	D2
TP549	G1	D2
TP563	A4	B4
TP620	G3	E2
TP621	G3	E2
U503A	A3	F3
U503B	C1	F3
U503C	A2	F3
U503D	A3	F3
U510	B2	F2
U519B	D5	F3
U520	C1	D3
U521	D1	C3
U522	D1	C3
U533	F1	D1
U554B	C2	F3
U554C	D5	F3
U554D	E5	F3
U554E	C2	F3
U554F	D1	F3
U569A	D4	F3
U569B	C3	F3
U570	C3	E3
U575	F3	D3
U580	F3	D3
U585	E3	D3
U590	E4	E3
U595	D4	E3
U610	G3	D2
U620	G4	E2
U621A	G4	E1
U621B	G2	E1
U630A	F5	F3
U630B	E4	F3

Partial A25 ASSY also shown on diagrams 8 and 20.

http://manoman.sqhill.com

WAVEFORM CONDITIONS

The waveforms shown were taken with the 7854 controls set as follows: CRT DISPLAY (SCOPE); TRIGGER SOURCE (VERT MODE); VERTICAL MODE (LEFT); HORIZONTAL MODE (B); READOUT INTENSITY (MIDRANGE).

Waveform Conditions. The waveforms shown below were obtained using a test oscilloscope system with 10 MΩ input impedance, at least 60 MHz bandwidth and 10X probe (Tektronix 7603 Oscilloscope, 7B92 Time Base, 7A13 Differential Comparator and P6063A Probe).

A Tektronix 7A26 Dual Trace Amplifier with controls set as follows: VOLTS/DIV (0.1 V); DISPLAY MODE (CH1); was installed in the LEFT VERT compartment of the 7854.

The 0.4 V CALIBRATOR signal was applied to the channel 1 bnc connector.

A Tektronix 7B15 Time Base with controls set as follows: TRIGGERING (NORM, AC, INT); TIME/DIV (1 ms); was installed in the B HORIZ compartment of the 7854.

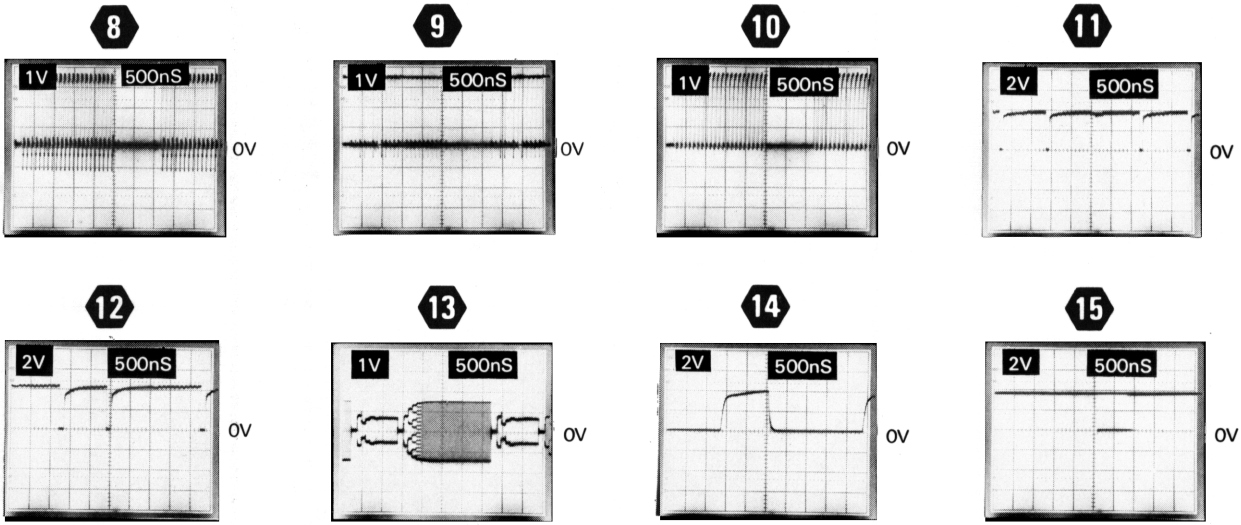

Selectable Electrical Parts Table
For Schematic 26.

Component Number	Reason for Selection	Component Value
A25C553	Falling edge of last clock should be 20-30ns later than rising edge of pulse at TP519. (Select C553 first to avoid interaction).	33pF 27pF 40pF 47pF
A25C561	Increase C561 until R515 has proper range.	33-62pF
A25C599	Rising edge at pin 36 of P101 should be 5-15ns later than rising edge at TP520.	15pF 27pF 33pF

http://manoman.sqhifi.com

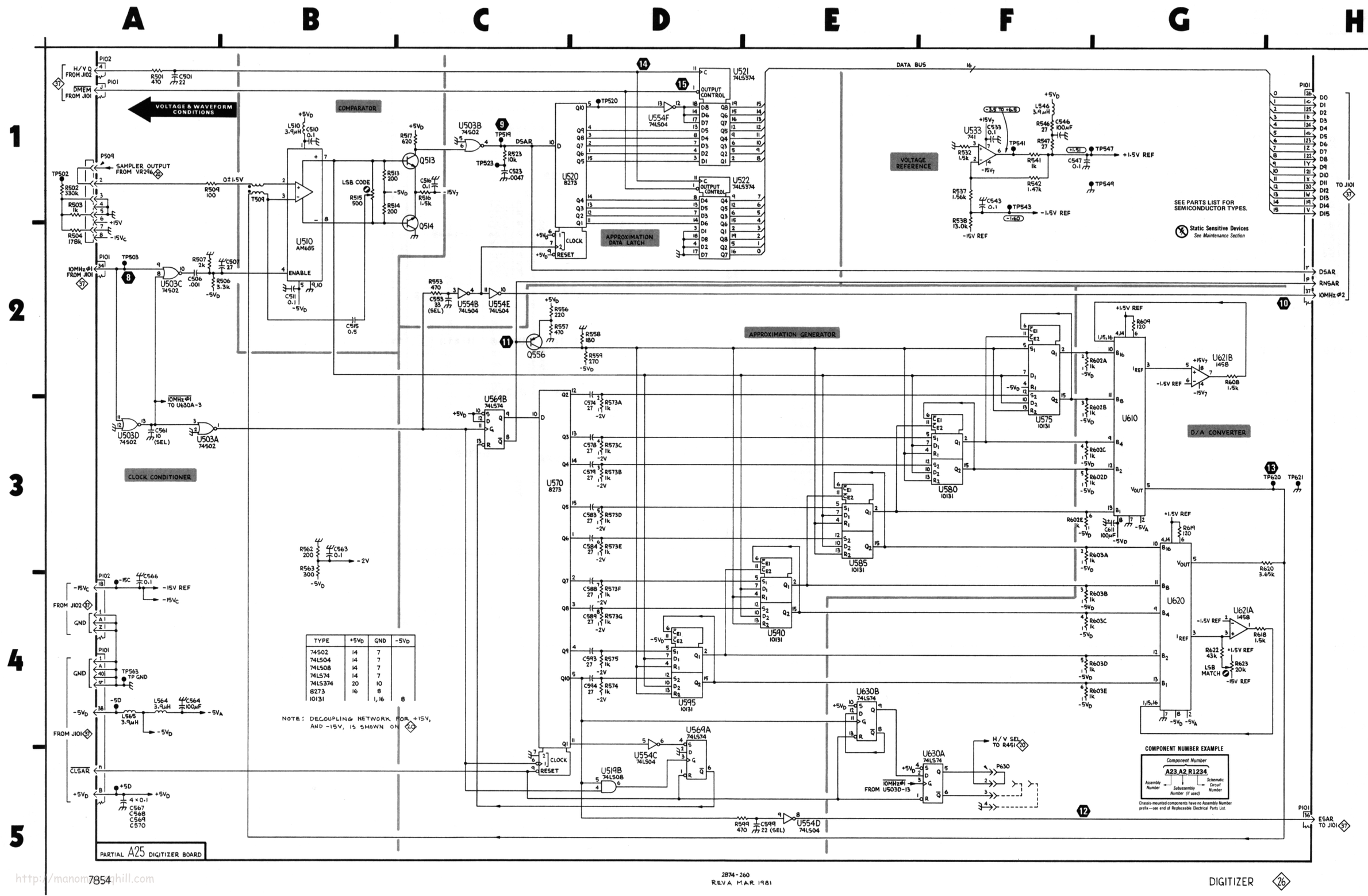

http://manoms.mcgraw-hill.com

KEYBOARD INTERFACE AND SIGNATURE ANALYSIS DIAGRAM 27

PARTIAL A27 ASSY

CIRCUIT NUMBER	SCHEM LOCATION	BOARD LOCATION
C103	D2	B2
C120	C2	B5
C200	F2	B2
C202	A3	B3
C210	A3	B4
C320	A3	B5
C321	A3	B5
C410	A3	C4
C510	A3	D4
C600	A3	D3
C610	A3	D4
C620	A3	D5
C800	A3	G3
C810	A3	G4
C826	A3	G5
C900	A3	G3
C920	A3	G5
C921	A3	G5
C922	A3	G5
C923	A3	G5
C1200	A3	I3
C1210	A3	I4
C1310	A3	I4
C1320	A3	I5
P105	A3	E6
P105	E1	E6
P108	E1	C2
P108	G2	C2
P130	F3	F1
P220	B3	B4
P1410	C4	J3
R105	D3	A3
R106	D2	A3
R301	E1	B2
R302	E1	B2
R303	E1	B2
R304	E1	C2
R305	E1	B3
R306	E1	B3
R310	F2	C4
R310	F3	C4
R310J	C2	C4
R420D	A2	C5
TP100	C3	A2
TP100	D3	A2
TP500	A4	D1
TP500	D3	D1
TP1200	A3	I1
U110A	C3	A4
U110B	B2	A4
U120A	C2	A5
U120B	C2	A5
U200A	D3	B3
U200B	D2	B3
U210	B1	B4
U220A	D2	B5
U220B	C3	B5
U310	E2	B4
U320B	D1	B5
U410	F3	C4
U420A	D2	C5
U420B	E3	C5
U520A	C3	D5
U520D	B3	D5
U1000B	B3	H2
U1000D	C2	H2
U1400	B2	J2
U1410A	C3	J4
U1410B	C3	J4

Partial A27 ASSY also shown on diagrams 28 and 36.

http://manoman.sqhill.com

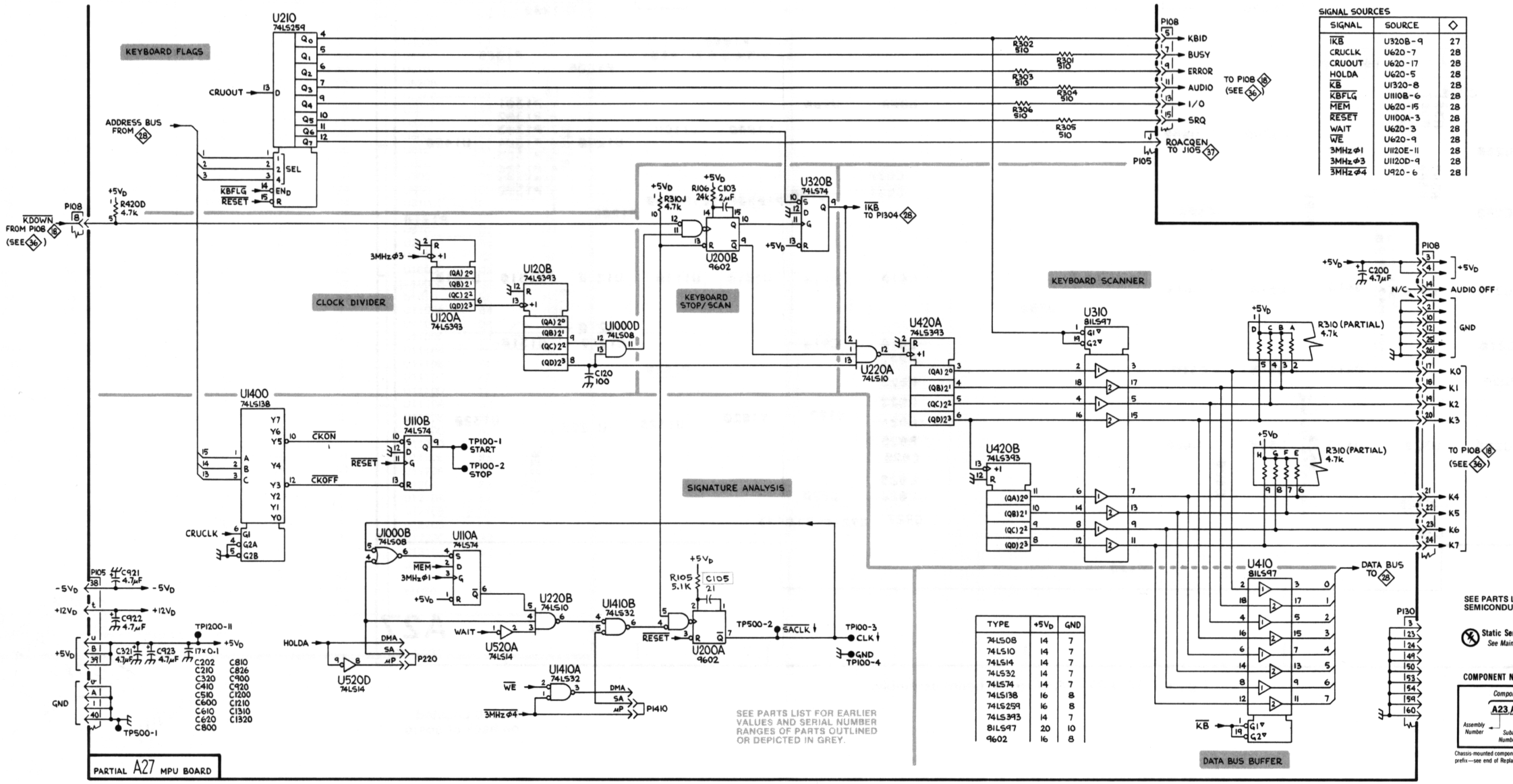
KEYBOARD FLAGS
U210
74LS259
CRUOUT
ADDRESS BUS FROM 28
SEL
KBFLG
RESET
EN
R
KDOWN FROM P108 (SEE 36)
P108
+5VD
R420D 4.7k
R302 510
R301 510
R303 510
R304 510
R306 510
R305 510
KBID
BUSY
ERROR
AUDIO
I/O
SRQ
TO P108 (SEE 36)
ROACQEN TO J105 37
P105
SIGNAL SOURCES
SIGNAL | SOURCE | ◇
IKB | U320B-9 | 27
CRUCLK | U620-7 | 28
CRUOUT | U620-17 | 28
HOLDA | U620-5 | 28
KB | U1320-8 | 28
KBFLG | U1110B-6 | 28
MEM | U620-15 | 28
RESET | U1100A-3 | 28
WAIT | U620-3 | 28
WE | U620-9 | 28
3MHz φ1 | U1120E-11 | 28
3MHz φ3 | U1120D-9 | 28
3MHz φ4 | U920-6 | 28
R310J 4.7k
R106 24k
C103 2μF
U200B 9602
U320B 74LS74
IKB TO P1304 28
CLOCK DIVIDER
3MHz φ3
U120A 74LS393
U120B 74LS393
U1000D 74LS08
C120 100
KEYBOARD STOP/SCAN
U220A 74LS10
KEYBOARD SCANNER
U420A 74LS393
U310 81LS97
R310 (PARTIAL) 4.7k
C200 4.7μF
AUDIO OFF
N/C
GND
K0
K1
K2
K3
K4
K5
K6
K7
U420B 74LS393
TO P108 (SEE 36)
U1400 74LS138
U1110B 74LS74
CKON
CKOFF
RESET
TP100-1 START
TP100-2 STOP
CRUCLK
SIGNATURE ANALYSIS
U1000B 74LS08
U1110A 74LS74
MEM
3MHz φ1
U220B 74LS10
U520A 74LS14
WAIT
HOLDA
DMA
SA
MP
P220
U520D 74LS14
U1410B 74LS32
U200A 9602
TP500-2 SACLK
TP100-3 CLK
TP100-4 GND
U1410A 74LS32
WE
3MHz φ4
P1410
U410 81LS97
DATA BUS TO 28
P130
KB
DATA BUS BUFFER
-5VD
+12VD
C921 4.7μF
C922 4.7μF
C321 4.7μF
C923 4.7μF
17×0.1
TP1200-11
TP500-1
C202 C210 C320 C410 C510 C600 C610 C620 C800
C810 C826 C900 C920 C1200 C1210 C1310 C1320
TYPE | +5VD | GND
74LS08 | 14 | 7
74LS10 | 14 | 7
74LS14 | 14 | 7
74LS32 | 14 | 7
74LS74 | 14 | 7
74LS138 | 16 | 8
74LS259 | 16 | 8
74LS393 | 14 | 7
81LS97 | 20 | 10
9602 | 16 | 8
SEE PARTS LIST FOR EARLIER VALUES AND SERIAL NUMBER RANGES OF PARTS OUTLINED OR DEPICTED IN GREY.
PARTIAL A27 MPU BOARD

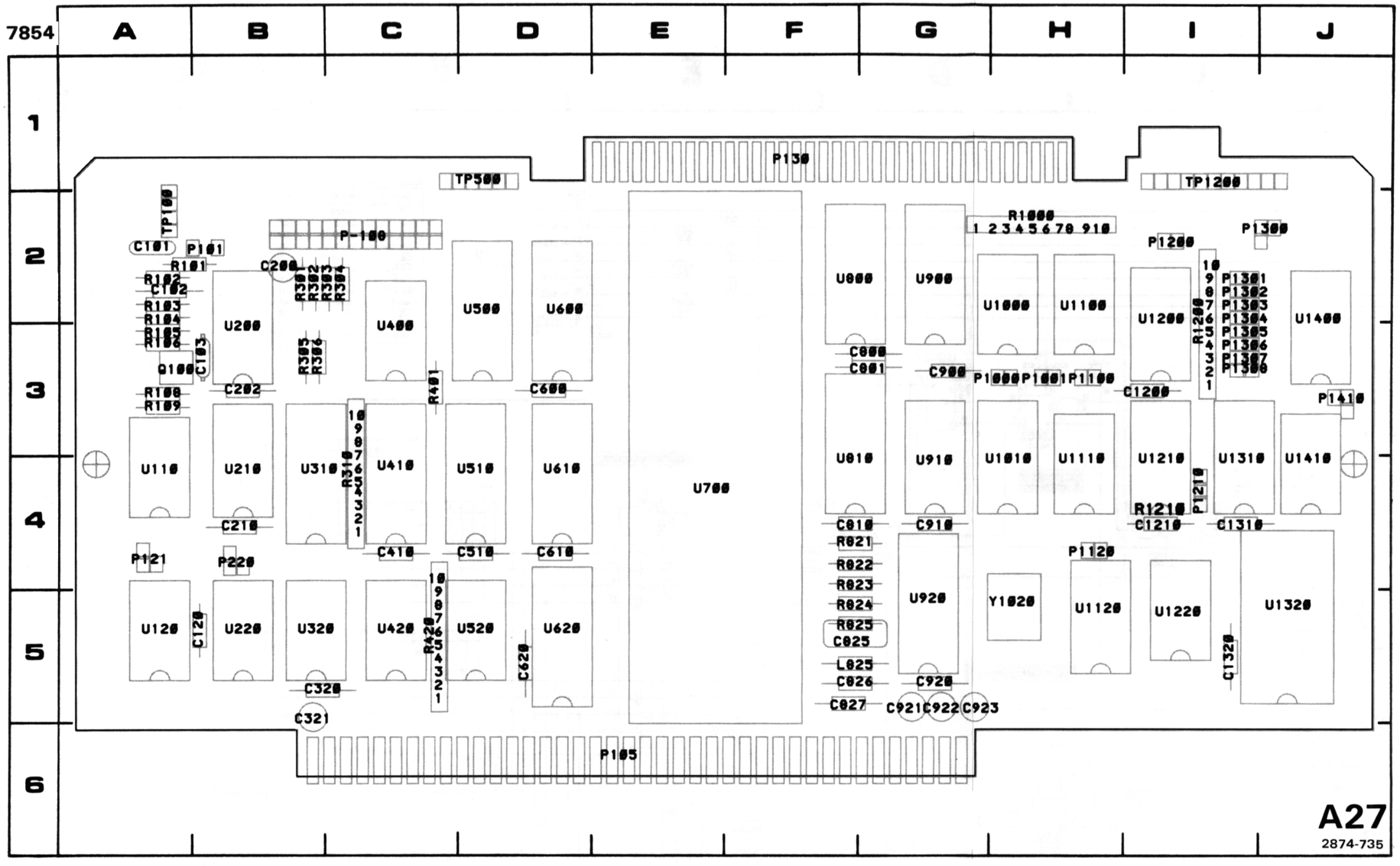

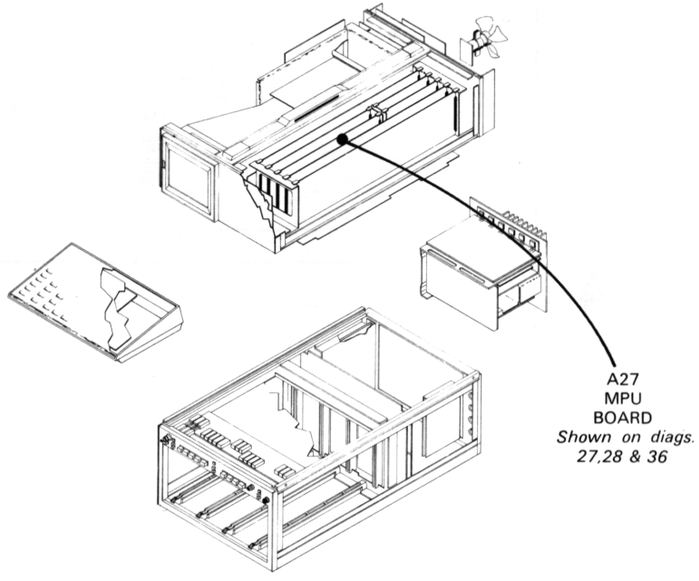

Figure 7-38. A27—MPU circuit board assembly.

REV JUN 1981

*R1210 Located on back of board.

http://manoman.sghill.com

MICROPROCESSOR AND CONTROL DIAGRAM 28

PARTIAL A27 ASSY

CIRCUIT NUMBER	SCHEM LOCATION	BOARD LOCATION
C101	A4	A2
C102	A4	A2
C801	D1	G3
C825	B5	G5
C827	D5	G5
C910	B4	G4
L825	B5	G5
P101	A5	B2
P105	A1	E6
P105	A3	E6
P105	A4	E6
P105	C2	E6
P105	C4	E6
P105	G1	E6
P105	G5	E6
P108	G3	C2
P121	F1	A4
P130	A2	F1
P130	A4	F1
P130	C3	F1
P130	C4	F1
P130	F1	F1
P130	G4	F1
P1000	C2	H3
P1001	D2	H3
P1100	A2	H3
P1120	C4	H4
P1200	C5	I2
P1210	G2	I4
P1300	C3	J2
P1301	A3	I2
P1302	A3	I2
P1303	A3	I2
P1304	A3	I2
P1305	A4	I3
P1306	A3	I3
P1307	A3	I3
P1308	A3	I3
Q100	A4	A3
R101	A4	A2
R102	A4	A2
R103	A4	A2
R104	A4	A2
R108	A4	A3
R109	A4	A3
R401	H3	C3
R420	E4	C5
R420A	C4	C5
R420B	A3	C5
R420C	C4	C5
R420E	C4	C5
R420G	D1	C5
R821	D5	G4
R822	D5	G4
R823	D5	G4
R824	D5	G5
R825	B5	G5
R1000	C3	H2
R1000F	C4	H2
R1000G	A2	H2
R1000H	B2	H2
R1000J	B4	H2
R1200A	B3	I2
R1200B	B3	I2
R1200C	B4	I2
R1200D	B4	I2
R1200E	B3	I2
R1200F	B3	I2
R1200G	B3	I2
R1200H	B3	I2
R1200J	D2	I2
R1210	D3	*
TP500	D3	D1
TP500	E4	D1
TP1200	A4	I1
TP1200	A3	I1
TP1200	A4	I1
TP1200	C4	I1
TP1200	D4	I1
TP1200	E4	I1
U220C	B4	B5
U320A	A4	B5
U400A	E3	C3
U400B	E3	C3
U400C	E3	C3
U400D	E3	C3
U500	B2	D2
U510	B1	D4
U520B	F4	D5
U520C	E3	D5
U520E	A4	D5
U520F	B4	D5
U600	A2	D2
U610	A1	D4
U620	D4	D5
U700	D2	E4
U800	E2	G2
U810	E1	G4
U900	C3	G2
U910	G2	G4
U920	B5	G5
U1000A	F2	H2
U1000C	D3	H2
U1000D	C3	H2
U1010	F2	H4
U1100A	B4	H2
U1100B	D4	H2
U1100C	D4	H2
U1110A	F4	H4
U1110B	F4	H4
U1110C	F2	H4
U1110D	F2	H4
U1120A	G3	H5
U1120B	B5	H5
U1120C	A2	H5
U1120D	B5	H5
U1120E	B5	H5
U1120F	B5	H5
U1200	B3	I2
U1210A	E2	I3
U1210B	F3	I3
U1220B	F3	I5
U1220C	H3	I5
U1310	G3	I4
U1320	G2	J5
Y1020	B5	H5

Partial A27 ASSY also shown on diagrams 27 and 36.

***Located on back of board.**

http://manoman.sqhill.com

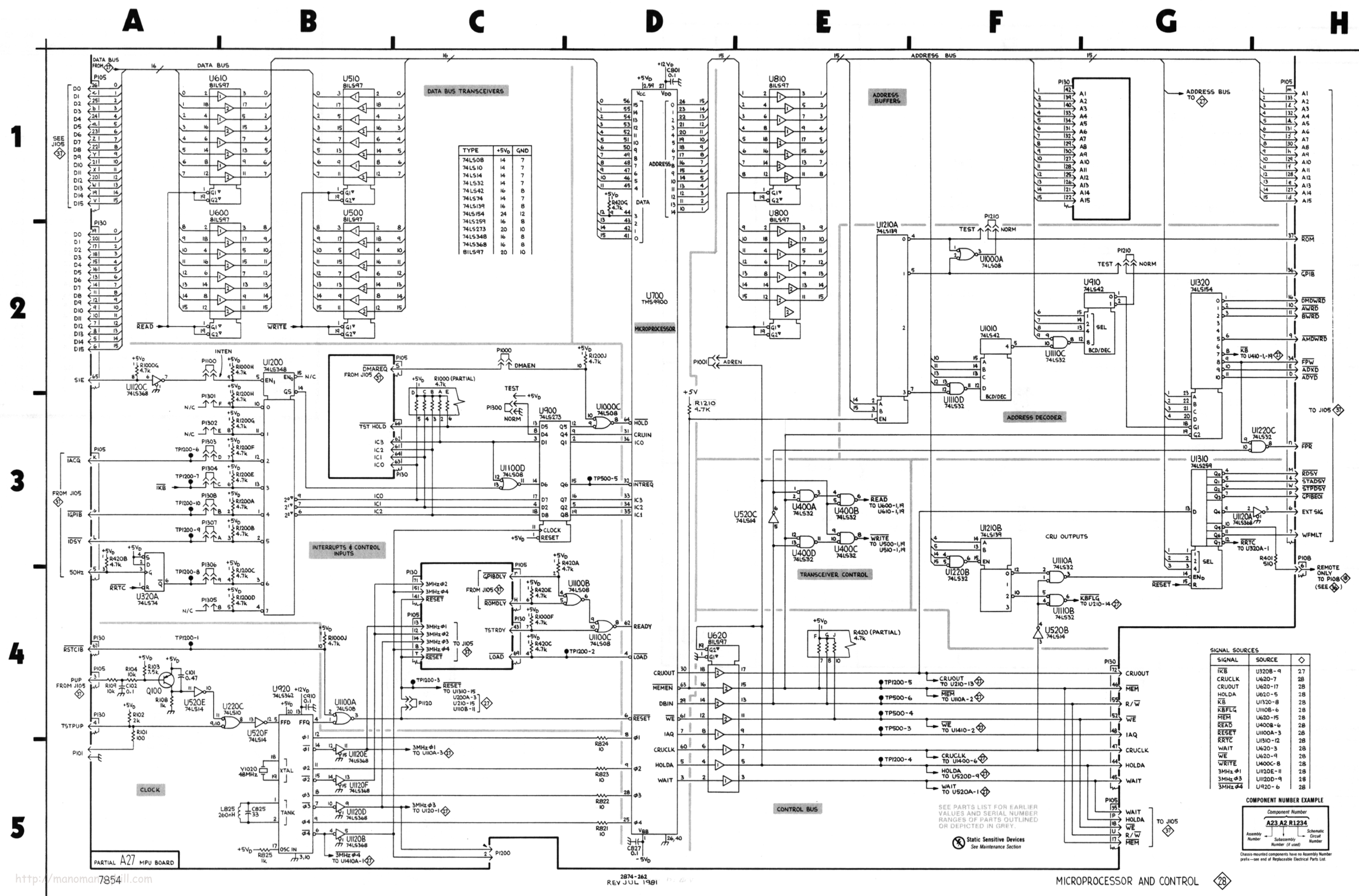

TYPE	+5V$_D$	GND
74LS08	14	7
74LS10	14	7
74LS14	14	7
74LS32	14	7
74LS42	16	8
74LS74	14	7
74LS139	16	8
74LS154	24	12
74LS259	16	8
74LS273	20	10
74LS348	16	8
74LS368	16	8
81LS97	20	10

SIGNAL SOURCES

SIGNAL	SOURCE	◇
$\overline{IKB}$	U320B-9	27
CRUCLK	U620-7	28
CRUOUT	U620-17	28
HOLDA	U620-5	28
$\overline{KB}$	U1320-8	28
$\overline{KBFLG}$	U1110B-6	28
$\overline{MEM}$	U620-15	28
$\overline{READ}$	U400B-6	28
$\overline{RESET}$	U1100A-3	28
$\overline{RRTC}$	U1310-12	28
WAIT	U620-3	28
$\overline{WE}$	U620-9	28
$\overline{WRITE}$	U400C-8	28
3MHz φ1	U1120E-11	28
3MHz φ3	U1120D-9	28
3MHz φ4	U920-6	28

7854
2874-262
REV JUL 1981
MICROPROCESSOR AND CONTROL 28

http://manomanovintill.com

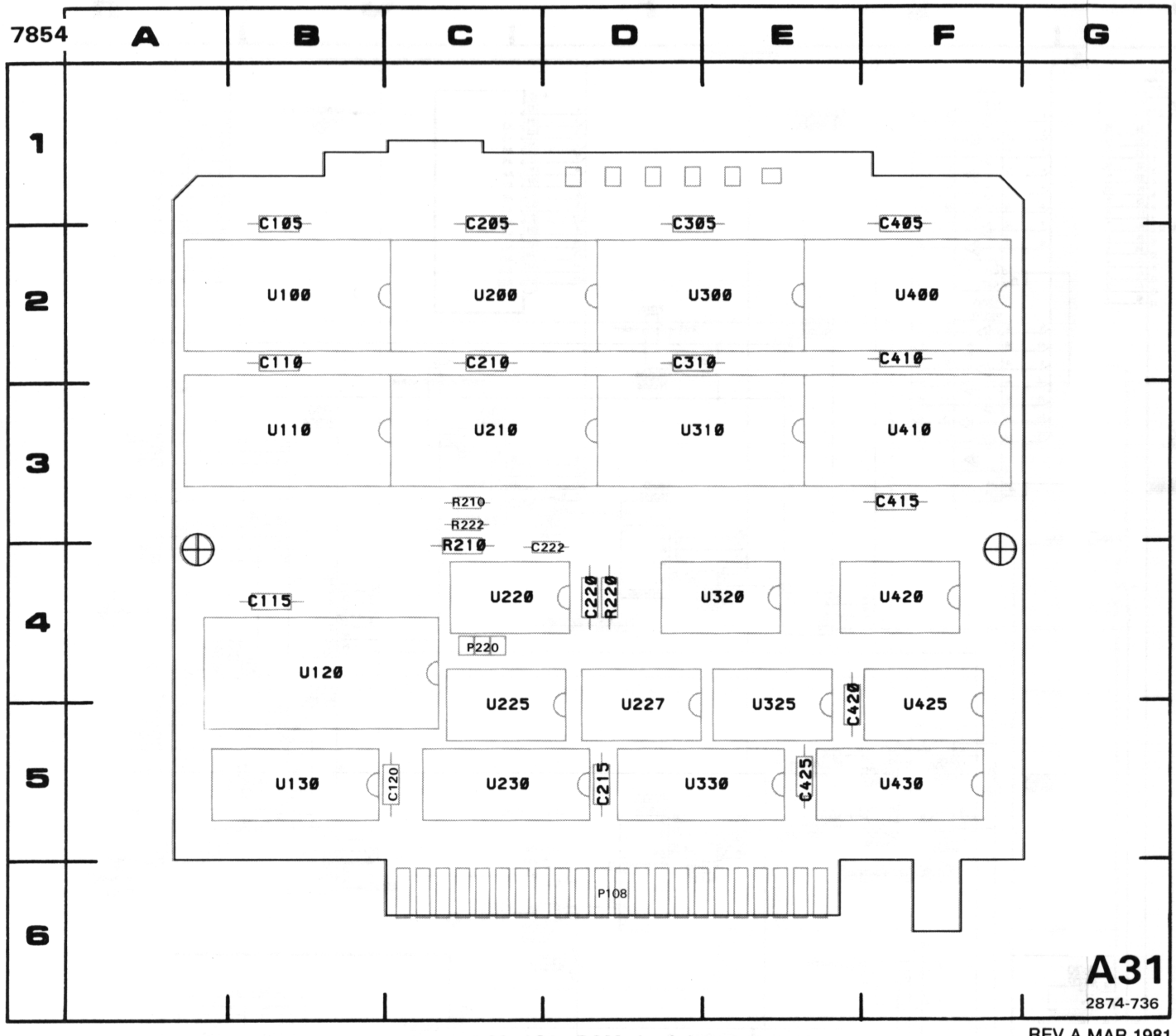

Figure 7-39. A31—ROM circuit board assembly.

A31 ASSY

CIRCUIT NUMBER	SCHEM LOCATION	BOARD LOCATION	CIRCUIT NUMBER	SCHEM LOCATION	BOARD LOCATION
C105	A2	B1	U220B	A5	C4
C110	A2	B2	U220C	A5	C4
C115	A2	B4	U220D	B5	C4
C120	A2	B5	U225A	B4	C5
C205	A2	C1	U225B	C5	C5
C210	A2	C2	U225C	C5	C5
C215	A2	D5	U227A	B5	D4
C220	A2	D4	U227B	B5	D4
C222	A5	C3	U230	B2	C5
C305	A2	D2	U300	D2	E2
C310	A2	D2	U310	D1	E3
C405	A2	F1	U320A	C3	E4
C410	A2	F2	U320B	B3	E4
C415	A2	F3	U320C	C4	E4
C420	A2	E5	U320D	C4	E4
C425	A2	E5	U325A	B4	E5
			U325B	C4	E5
P108	A1	D5	U325C	B4	E5
P108	A3	D5	U330	G1	E5
P108	G1	D5	U400	C2	F2
P220	D5	C4	U410	C1	F3
			U420A	B4	F4
R210	C3	C4	U420B	B3	F4
R220	C3	D4	U420C	C4	F4
R222	A5	C1	U420D	C4	F4
			U425A	C4	F5
U100	E2	B2	U425B	B3	F5
U110	E1	B3	U425C	B4	F5
U120	B2	B4	U425D	C4	F5
U130	B1	B5	U425E	B4	F5
U200	F2	C2	U425F	B4	F5
U210	F1	C3	U430	G2	F5
U220A	B5	C4			

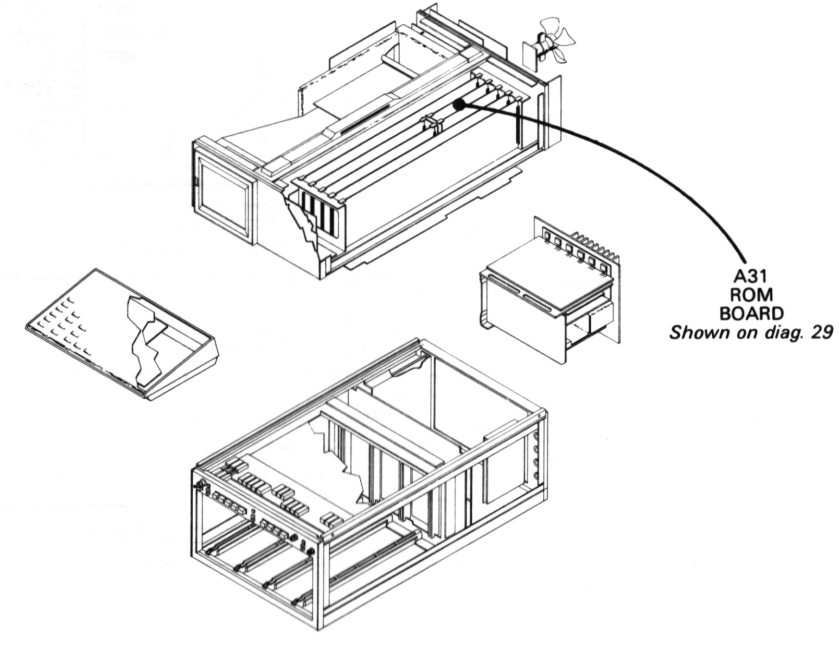

A31
ROM
BOARD
Shown on diag. 29

http://manoman.sqhill.com

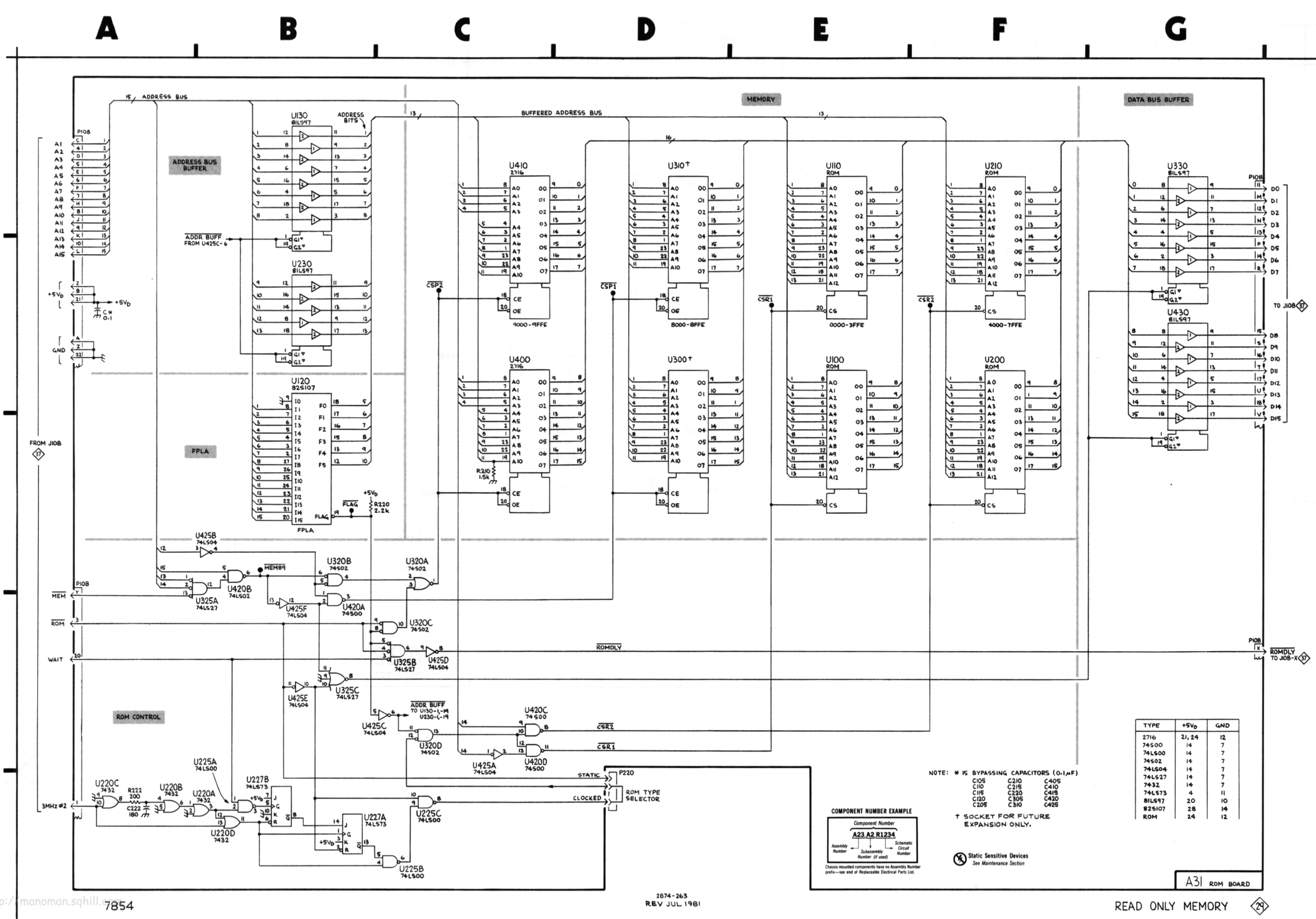

http://manoman.sghill.net/

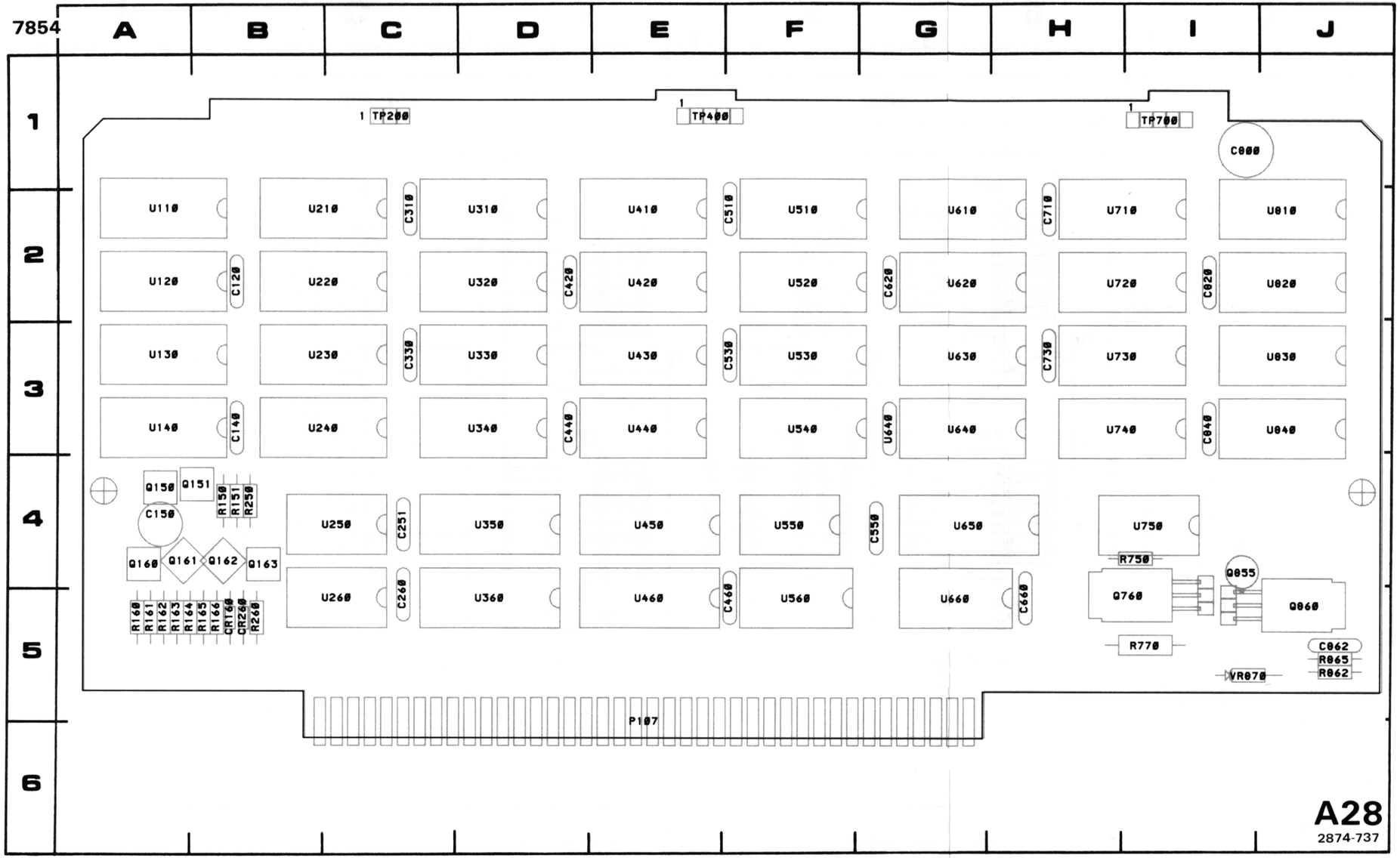

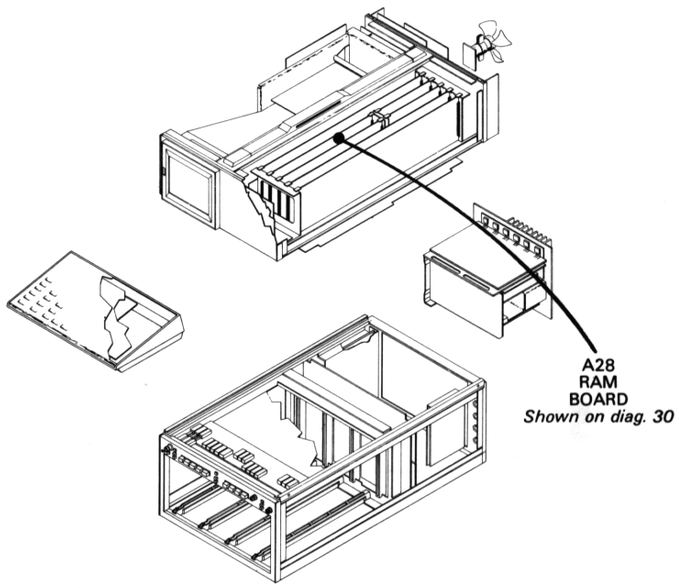

Figure 7-40. A28—RAM circuit board assembly.

REV A MAR 1981

http://manoman.sqhill.com

RANDOM ACCESS MEMORY DIAGRAM 30

A28 ASSY

CIRCUIT NUMBER	SCHEM LOCATION	BOARD LOCATION
C120	F5	B2
C140	F5	B3
C150	E5	A4
C251	D5	C4
C260	D5	C5
C310	F5	C2
C330	F5	C3
C420	F5	D2
C440	F5	D3
C460	D5	F5
C510	F5	F2
C530	F5	F3
C550	D5	G4
C620	F5	G2
C640	F5	G3
C660	D5	H5
C710	F5	H2
C730	F5	H3
C800	F5	I1
C820	F5	I2
C840	F5	K3
C862	E5	J5
CR160	F5	B5
CR260	F5	B5
P107	A3	E6
P107	D4	E6
P107	H1	E6
Q150	E5	A4
Q151	A5	B4
Q160	D5	A4
Q161	E5	A4
Q162	F5	B4
Q163	F5	B4
Q760	E5	I5
Q855	F5	I4
Q860	F5	J5
R150	A5	B4
R151	A5	B4
R160	D5	A5
R161	D5	A5
R162	D5	A5
R163	E5	A5
R164	E5	A5
R165	F5	B5
R166	F5	B5
R250	A5	B4
R260	F5	B5
R750	B4	I4
R770	F5	I5
R862	E5	J5
R865	E5	J5
TP200	A3	C1
TP400	A4	E1
TP400	A3	E1
TP400	A3	E1
TP700	B5	I1
TP700	B4	I1
TP700	C5	I1
TP700	F5	I1
U110	B1	A2
U120	B2	A2
U130	B2	A3
U140	B3	A3
U210	B1	C2
U220	B2	C2
U230	B2	C3
U240	B3	C3
U250A	B5	C4
U250B	B5	C4
U250D	A5	C4
U260A	A4	C5
U310	C1	D2
U320	C2	D2
U330	C2	D3
U340	C3	D3
U350	G3	D4
U360	G4	D5
U410	D1	E2
U420	D2	E2
U430	D2	E3
U440	D3	E3
U450	G1	E4
U460	G2	E5
U510	D1	F2
U520	D2	F2
U530	D2	F3
U540	D3	F3
U550A	B4	F4
U550B	B5	F4
U550C	A4	F4
U560	A3	F5
U610	E1	G2
U620	E2	G2
U630	E2	G3
U640	E3	G3
U650	A1	G4
U660	A2	G5
U660D	A5	G5
U660E	A4	G5
U660F	B4	G5
U710	F1	I2
U720	F2	I2
U730	F2	I3
U740	F3	I3
U750A	B5	I4
U750B	A4	I4
U750C	A4	I4
U750D	A4	I4
U810	F1	J2
U820	F2	J2
U830	F2	J3
U840	F3	J3
VR870	F5	I5

http://manuals.hpmuseum.org

VOLTAGE CONDITIONS

The voltages were taken with the 7854 controls set as follows: CRT DISPLAY (SCOPE); TRIGGER SOURCE (VERT MODE); VERTICAL MODE (LEFT); HORIZONTAL MODE (B); READOUT INTENSITY (OFF).

Voltage Conditions. The voltages on the diagram were taken using a digital multimeter with a 10 MΩ input impedance (Tektronix DM 501 Digital Multimeter installed in a TM 501 Power Module or a Tektronix 7D13 Digital Multimeter used with a readout-equipped 7000-Series Oscilloscope).

http://manoman.sqhill.com

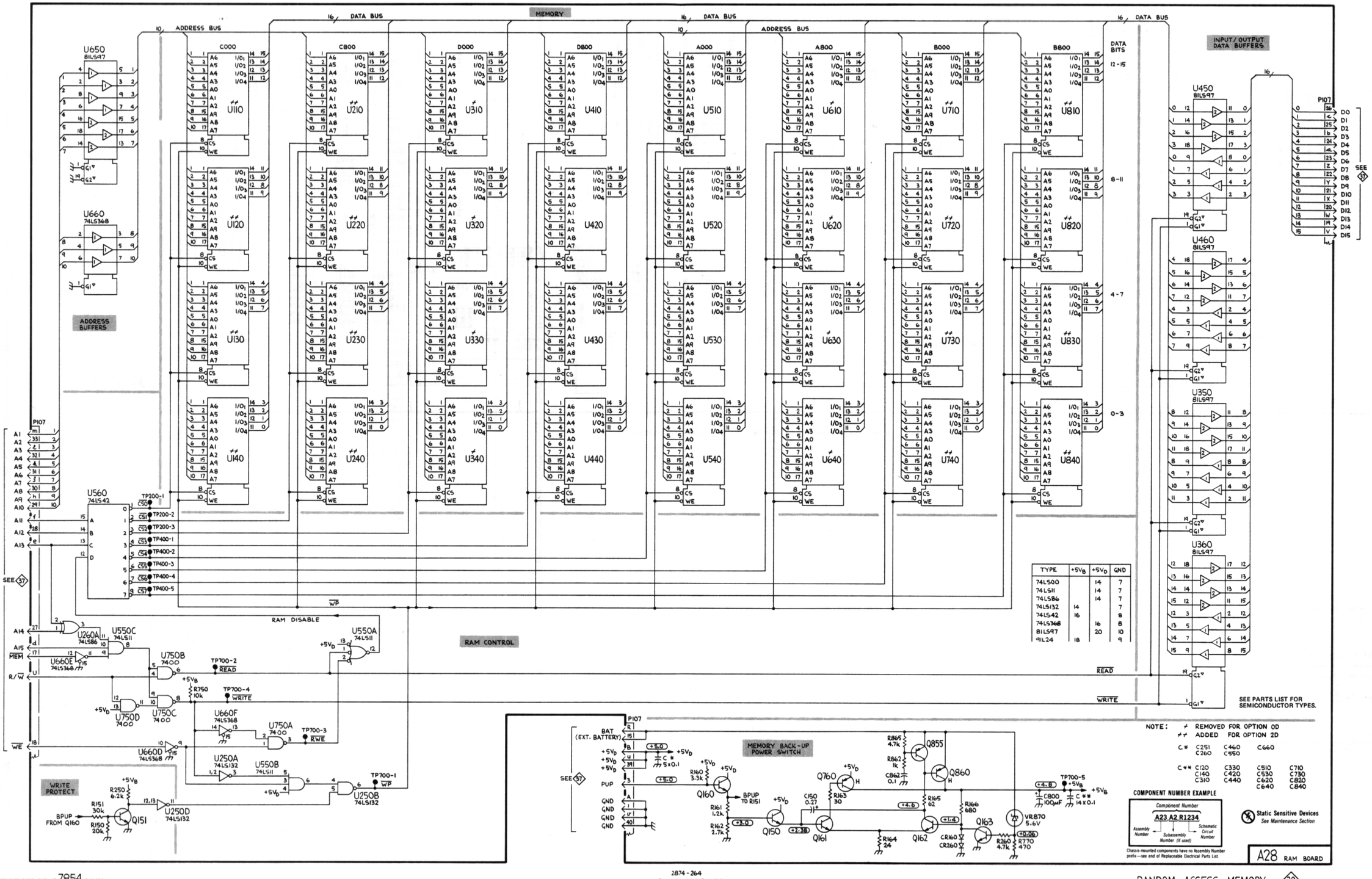

http://manoman.spdns.de

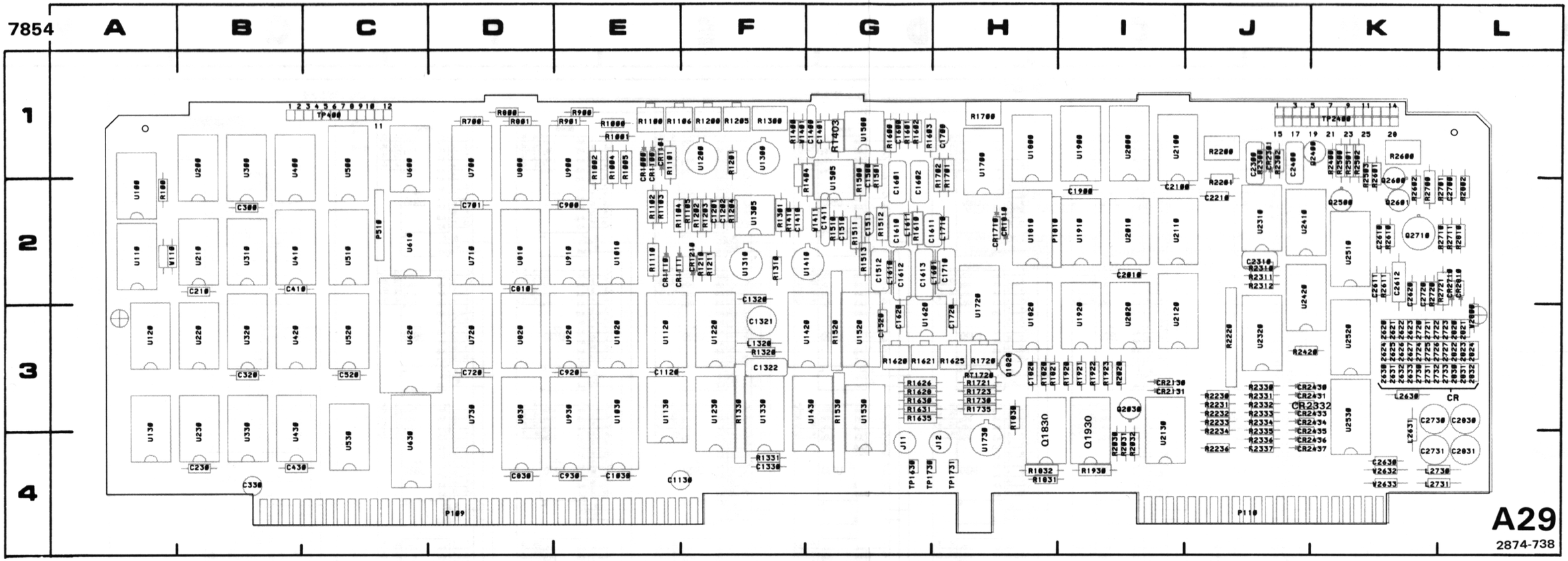

Figure 7-41. A29—Display circuit board assembly.

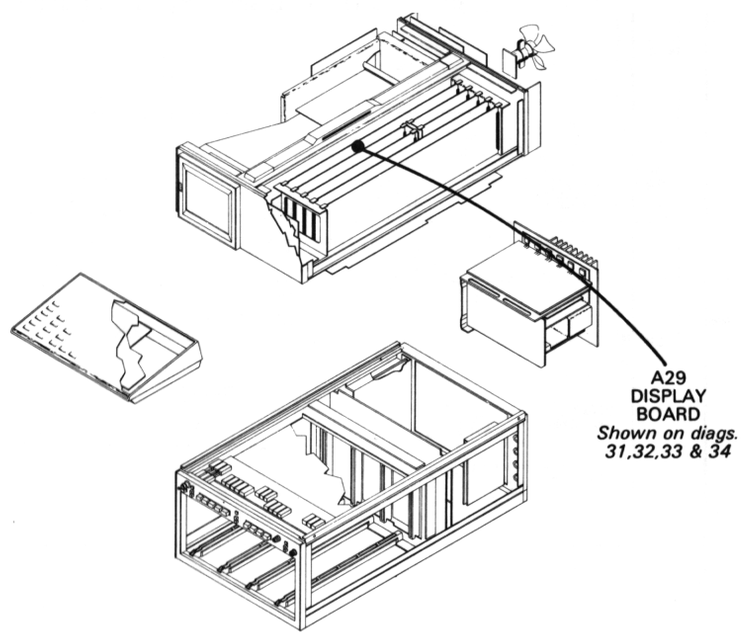

Static Sensitive Devices
See Maintenance Section

COMPONENT NUMBER EXAMPLE

Component Number
A23 A2 R1234
Assembly Number — *Subassembly Number (if used)* — *Schematic Circuit Number*

Chassis-mounted components have no Assembly Number prefix—see end of Replaceable Electrical Parts List.

http://manoman.sqhill.com

READOUT ACQUIRE DIAGRAM 31

PARTIAL A29 ASSY

CIRCUIT NUMBER	SCHEM LOCATION	BOARD LOCATION
C210	A2	B2
C230	A2	B4
C300	A2	B2
C320	A2	B3
C330	A2	B4
C410	A2	B2
C430	A2	B4
C520	A2	C3
C701	B2	D2
C720	B2	D3
C810	B2	D2
C830	B2	D4
C900	B2	E2
C920	B2	E3
C930	B2	E4
C1030	B2	E4
C1120	B2	E3
C1130	A2	E4
C1320	D3	F2
C1330	E3	F4
C1520	D4	G3
C1900	B2	I2
C2010	B2	I2
C2100	B2	I2
C2610	B1	K2
C2611	C3	K2
C2612	B1	K2
C2620	B1	K2
C2630	B2	K4
C2700	C5	L2
C2720	B1	K2
C2730	B1	K3
C2731	B1	K4
C2830	B1	L3
C2831	B1	L3
CR2332	B4	J3
CR2430	B4	J3
CR2431	B4	J3
CR2433	B4	J3
CR2434	B4	J3
CR2435	B4	J3
CR2436	B4	K4
CR2437	B4	J4
CR2620	A4	K3
CR2621	B4	K3
CR2622	A4	K3
CR2623	A4	K3
CR2624	A5	K3
CR2625	A5	K3
CR2626	A5	K3
CR2627	A5	K3
CR2630	A5	K3
CR2631	A5	K3
CR2632	A5	K3
CR2633	B5	K3
CR2710	B1	L2
CR2720	A3	K3
CR2721	A3	K3
CR2722	A3	K3
CR2723	A3	L3
CR2724	B5	K3
CR2725	A3	K3
CR2726	A3	K3
CR2727	A3	L3
CR2730	A5	K3
CR2731	A5	K3
CR2732	A5	K3
CR2733	A4	L3
CR2810	B1	L2
CR2820	A3	L3
CR2821	B3	L3
CR2822	A3	L3
CR2823	A3	L3
CR2824	A3	L3
CR2830	A4	L3
CR2831	A4	L3
CR2832	A4	L3
L2630	A1	K3
L2631	A1	K3
L2730	A1	K4
L2731	A1	K4
P109	A2	D4
P109	G2	D4
P110	A1	J4
P110	A2	J4
P110	G1	J4
Q1930D	D1	I3
Q2400	D3	J1
Q2500	D1	K2
Q2600	D4	K2
Q2601	D4	K2
Q2710	C4	K2
R1330	D3	F3
R1331	E3	F4
R1520	D5	G3
R1530B	D4	G3
R1530D	E3	G3
R1530F	D4	G3
R1530G	D4	G3
R1530H	D4	G3
R1530J	E5	G3
R1921	D1	I3
R2200	C3	J1
R2220	G2	J3
R2230	A4	J3
R2232	A4	J3
R2234	A4	J3
R2236	A4	J3
R2330	B4	J3
R2331	B4	J3
R2332	B4	J3
R2333	B4	J3
R2334	B4	J3
R2335	B4	J3
R2336	B4	J3
R2337	B4	J4
R2400	C1	K1
R2420	F1	J3
R2500	C4	K1
R2501	C3	K1
R2502	C3	K1
R2503	D4	K1
R2600	C5	K1
R2601	D4	K1
R2602	C4	K2
R2610	B1	K2
R2611	B1	K2
R2700	C5	K2
R2701	C5	L2
R2710	C4	L2
R2711	C4	L2
R2720	B1	K2
R2721	B1	K2
R2802	C5	L2
R2810	C4	L2
TP400	A2	C1
TP2400	C5	K1
TP2400	C3	K1
TP2400	C1	K1
TP2400	E3	K1
U130B	E2	A3
U200C	E2	B1
U830	F4	D3
U930	F3	E3
U1030	F2	E3
U1130A	D2	E3
U1130B	D2	E3
U1220	D3	F3
U1230	E3	F3
U1330B	E3	F3
U1420	E5	F3
U1430	E4	G3
U1520	D5	G3
U2320	E1	J3
U2420	B2	J2
U2510	C1	K2
U2520	C3	K3
U2530	C4	K3
W2632	A1	K4
W2633	A1	K4
W2800	B1	L3

Partial A29 ASSY also shown on diagrams 32, 33 and 34.

http://manoman.sghill.com

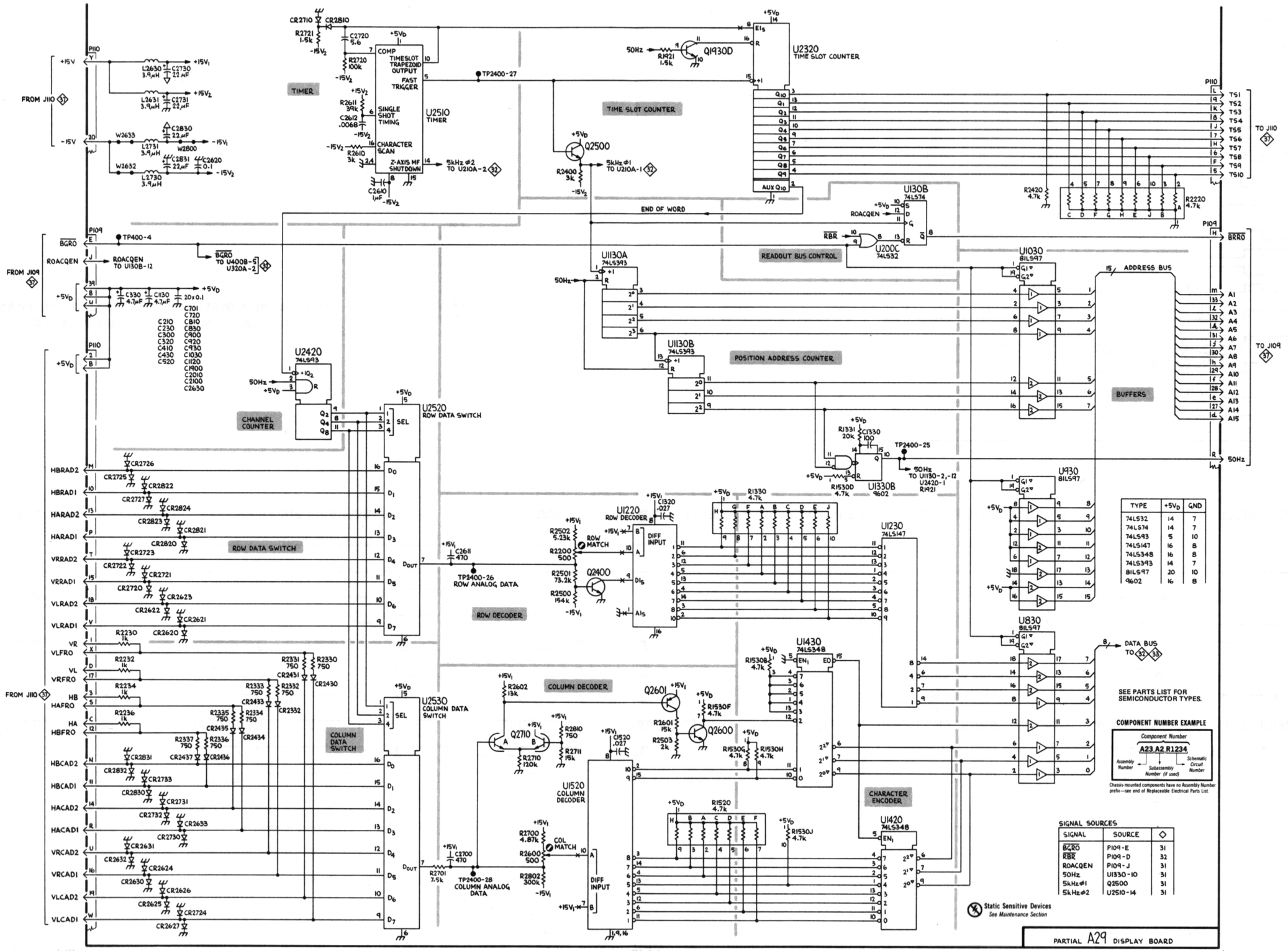

TYPE	+5VD	GND
74LS32	14	7
74LS74	14	7
74LS93	5	10
74LS147	16	8
74LS348	16	8
74LS393	14	7
81LS97	20	10
9602	16	8

SIGNAL	SOURCE	◇
$\overline{BGRO}$	P109-E	31
$\overline{RBR}$	P109-D	32
ROACQEN	P109-J	31
50Hz	U1330-10	31
5kHzΦ1	Q2500	31
5kHzΦ2	U2510-14	31

http://manoman.sqhill.com

CHARACTER MODE

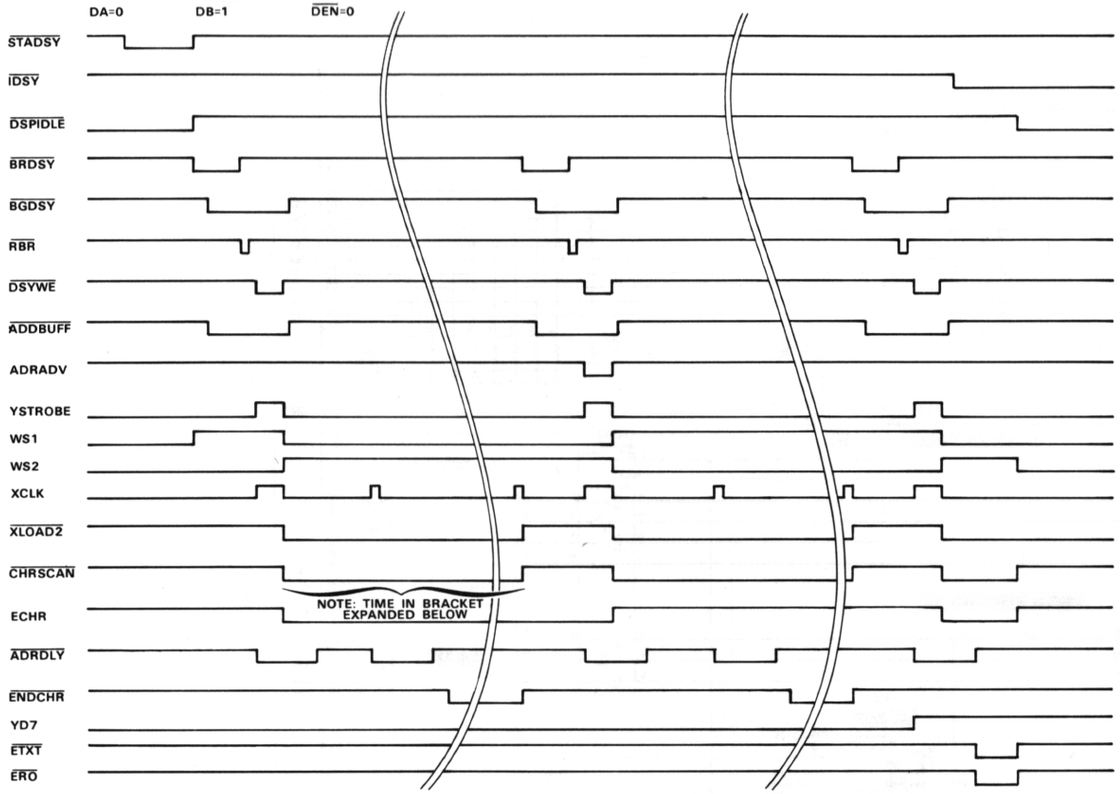

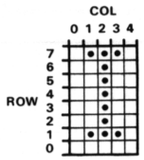

NOTE: ARROW DIRECTION INDICATES WHICH TRANSITION INDICATES FOLLOWING TRANSITION(S).

REV A MAR 1981

TIMING SEQUENCE FOR DISPLAY OF THE CHARACTER "I"

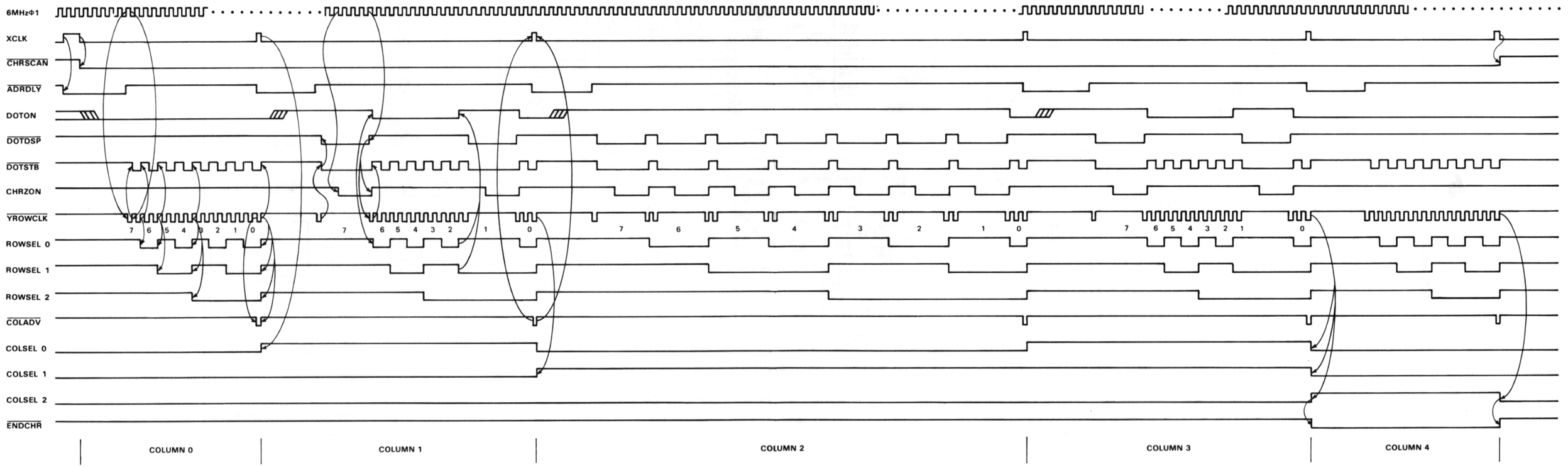

2874-739

http://manoman.sqhill.com

Figure 7-42. Character Mode Timing Diagram.

WAVEFORM CONDITIONS

The waveforms shown were obtained with the 7854 controls set as follows: CRT DISPLAY (STORED): VERTICAL MODE (LEFT); HORIZONTAL MODE (B): READOUT (OFF, for Y-T Mode and X-Y Mode ON, for Character Mode).

Refer to the waveform photos for additional setup information. No plug-in units were installed in the 7854.

Waveform Conditions. The waveforms shown were obtained with a 7854 Oscilloscope system. Any test oscilloscope system with 10MΩ impedance, at least 60 MHz bandwidth and 10X probe may be used. (Tektronix 7603 Oscilloscope, 7B80 Time Base, 7A26 Dual Trace Amplifier and P6063A Probe). The 7B80 Time Base was triggered on the input signal. A logic analyzer (Tektronix WR501) with P6451 Probe and test leads was used for waveforms 6 and 7 only.

Waveforms 6 and 7 Conditions.

The 7B80 Time Base was triggered by the WR501 Logic Analyzer trigger output. The WR501 inputs were connected as follows (see Table 7-1 below):

TABLE 7-1
Setup For Waveforms 6, 7, 27 and 28

WR501 Input No.	Connected To	Logic Level
0	U620-22	1
1	U620-23	0
2	U620-1	0
3	U620-2	1
4	U620-3	0
5	U620-4	0
6	U620-5	1
7	U630-19	1

http://manoman.sqhill.com

1

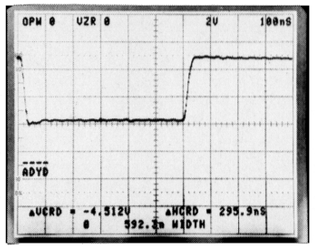

2

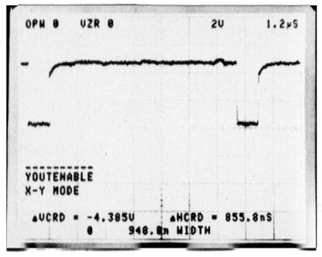

3

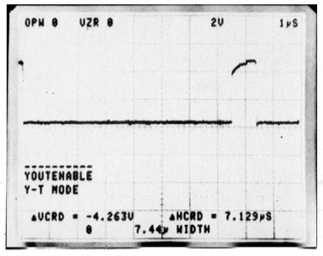

4

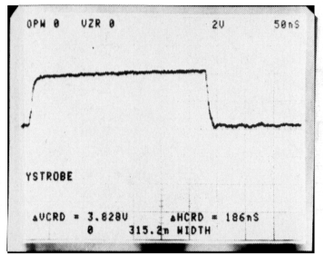

5

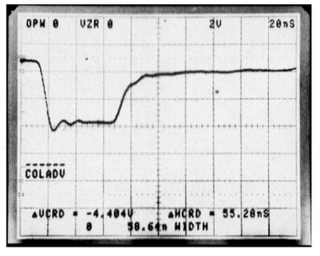

6

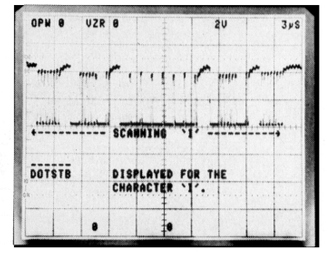

7

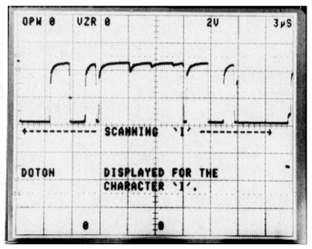

8

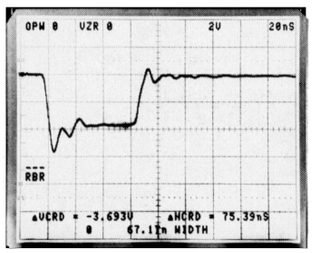

9

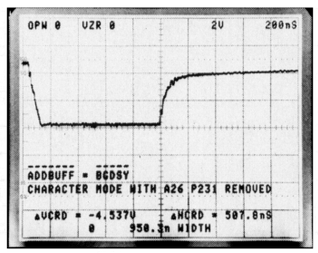

10

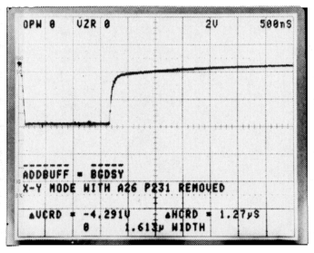

11

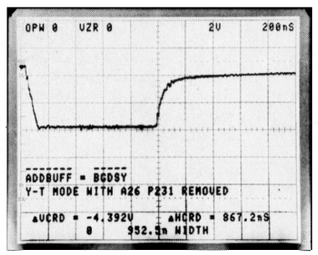

12

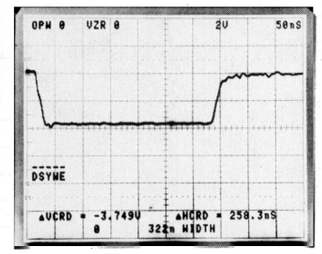

13

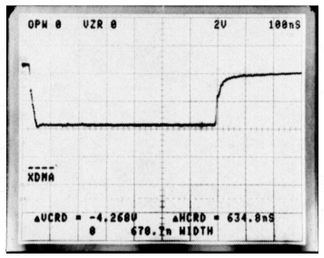

14

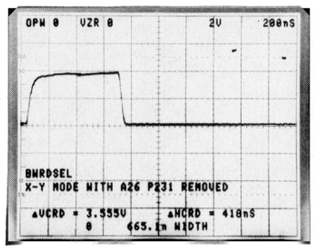

15

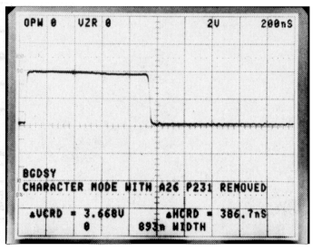

16

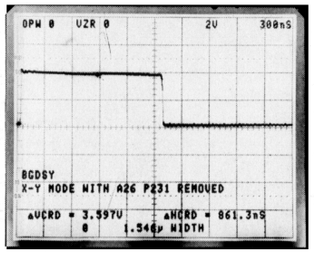

17

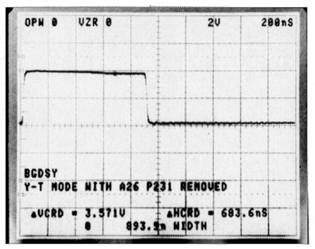

18

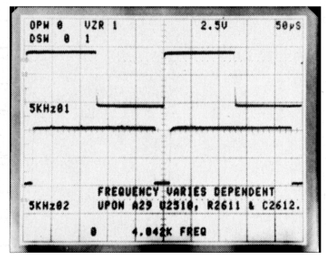

19

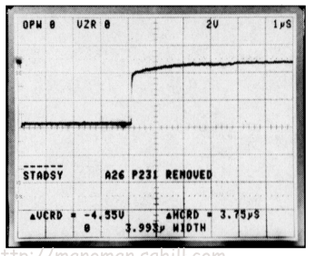

20

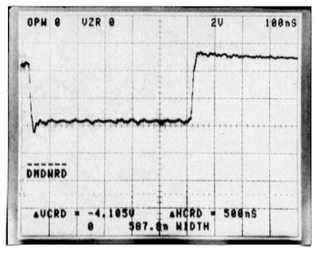

21

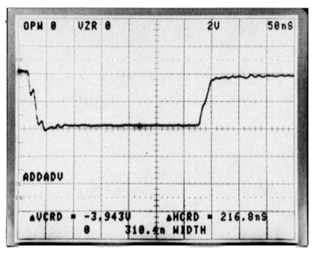

22

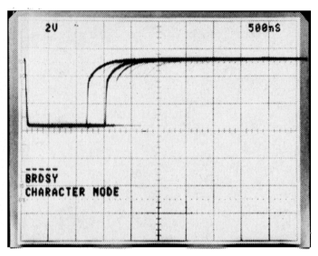

23

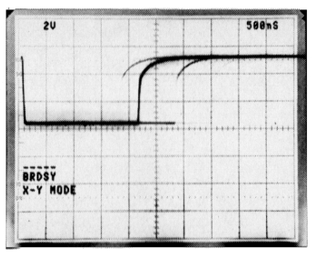

24

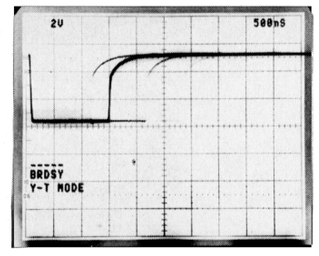

http://manoman.sqhill.com

@

YT MODE

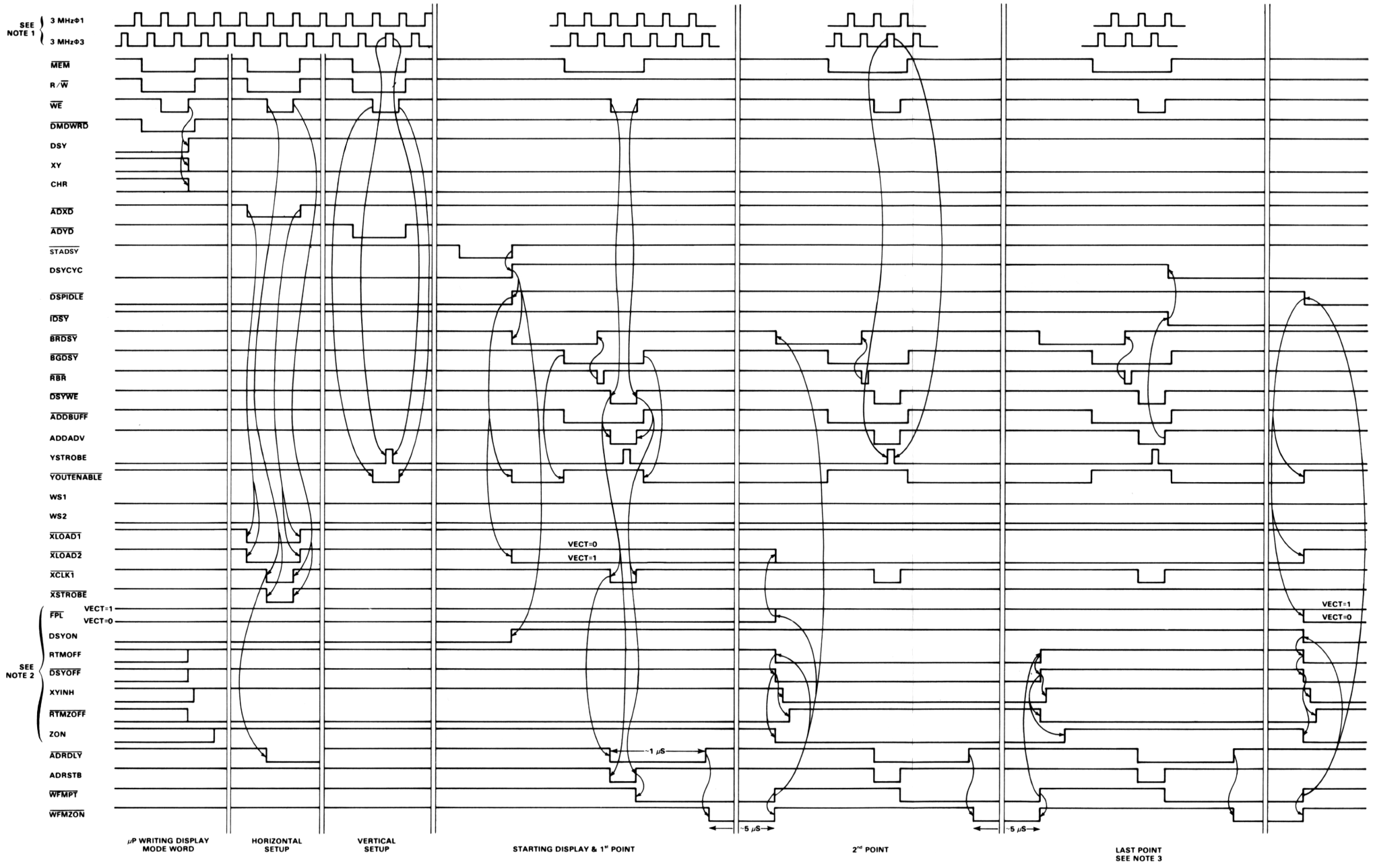

NOTE 1: 3 MHzΦ1 AND 3 MHzΦ3 ONLY SHOWN WHERE THEIR TIMING RELATIONSHIP APPLIES.
NOTE 2: REAL TIME MODE BIT, RT, IS ASSUMED TO BE A LOGICAL '1' (IN 'BOTH' DISPLAY MODE).
NOTE 3: THE LAST POINT IS THE (P/W)th POINT (I.E., IF POINTS/WAVEFORM = 128 THEN LAST POINT = 128th POINT).

ARROW DIRECTION INDICATES WHICH TRANSITION INITIATES FOLLOWING TRANSITION(S).

REV A MAR 1981

2874-740

http://manoman.sqhill.com

Figure 7-43. YT Mode Timing Diagram.

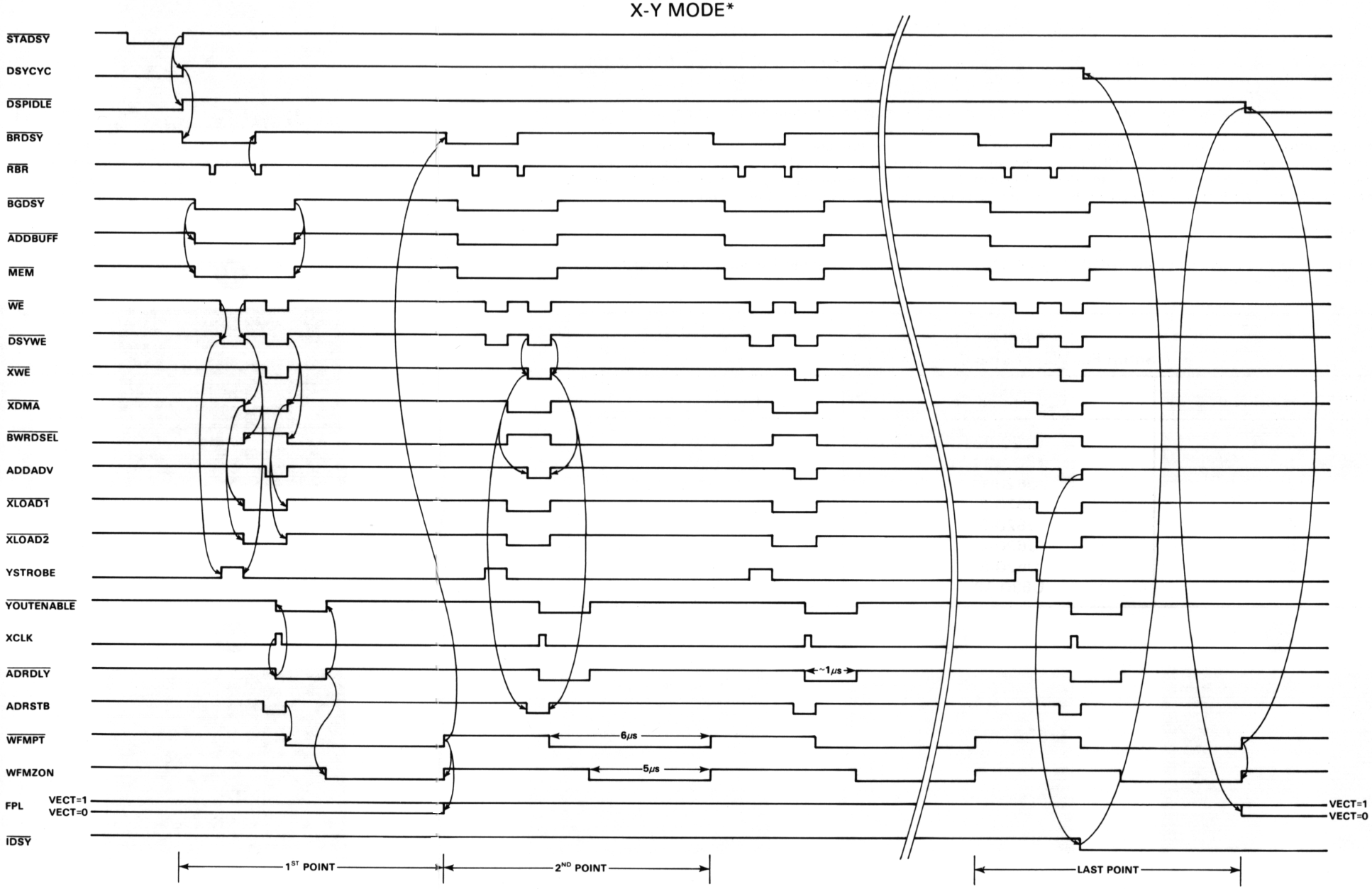

*All display related signals are not shown on this timing diagram. In X-Y mode, DSY is HI, XY is HI and CHR is LO. This timing diagram further assumes that the Real Time mode bit (RT) is LO (and thus DSYON is HI, RTMOFF is HI, $\overline{\text{DSYOFF}}$ is HI, XYINH is HI, $\overline{\text{RTMZOFF}}$ is LO and ZON is HI), XY is HI and CHR is LO (resulting in both WS1 and WS2 being LO). Refer to the first 3 sections of the Y-T MODE timing diagram for the Display Mode Word, Horizontal and Vertical setup sequences.

2874-741

Figure 7-44. X-Y Mode Timing Diagram.

http://manoman.sqhill.com

WAVEFORM CONDITIONS

The waveforms shown were obtained with the 7854 controls set as follows: CRT DISPLAY (STORED): VERTICAL MODE (LEFT); HORIZONTAL MODE (B); READOUT (OFF; for Y-T Mode and X-Y Mode; ON for Character Mode). Refer to the waveform photos for additional setup information. No plug-in units were installed in the 7854.

Waveform Conditions. The waveforms shown were obtained with a 7854 Oscilloscope system. Any test oscilloscope system with 10MΩ impedance, at least 60 MHz bandwidth and 10X probe may be used. (Tektronix 7603 Oscilloscope, 7B80 Time Base, 7A26 Dual Trace Amplifier and P6063A Probe). The 7B80 Time Base was triggered on the input signal. A logic analyzer (Tektronix WR501) with P6451 Probe and test leads was used for waveforms 25, 27, 28, 30, 37, 41 and 42 only.

Setup A: Waveform 18 conditions. The 7B80 Time Base was triggered on 5 kHz Φ1.

Setup B: Waveform 25 conditions. The 7B80 Time Base was triggered on 3 MHz Φ1.

Setup C: Waveforms 27 and 28 conditions. The 7B80 Time Base was triggered by the WR501 Logic Analyzer trigger output. The WR501 inputs were connected and corresponding switches set as follows (see Table 7-2 below):

Setup D: Waveforms 30, 35, 37, 41 and 42 conditions. Same as setup C except as follows (see Table 7-1 below):

TABLE 7-1
Setup For Waveforms 6, 7, 27 and 28

WR501 Input No.	Connected To	Logic Level
0	U620-22	1
1	U620-23	0
2	U620-1	0
3	U620-2	1
4	U620-3	0
5	U620-4	0
6	U620-5	1
7	U630-19	1

TABLE 7-2
Setup For Waveforms 30, 35, 37, 41 and 42

WR501 Input No.	Connected To	Logic Level
0	U620-22	1
1	U620-23	0
2	U620-1	1
3	U620-2	0
4	U620-3	0
5	U620-4	1
6	U620-5	1
7	U630-19	1

http://manoman.sqhill.com

25

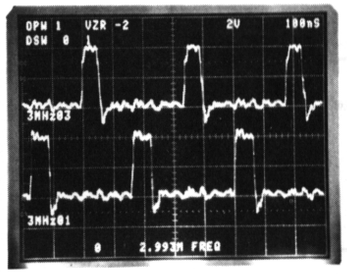

26

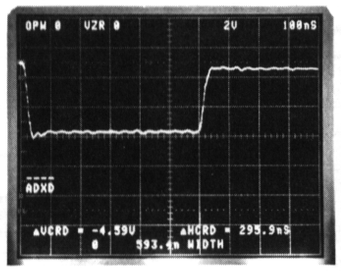

27

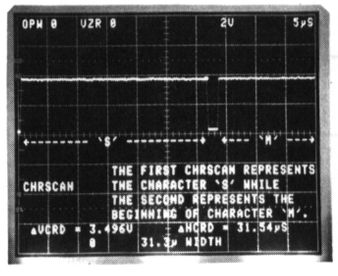

28

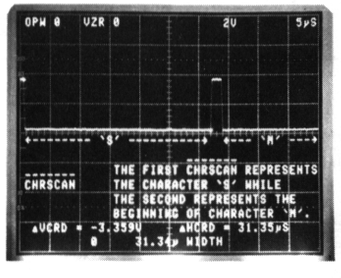

29

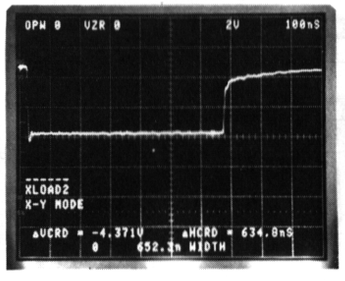

30

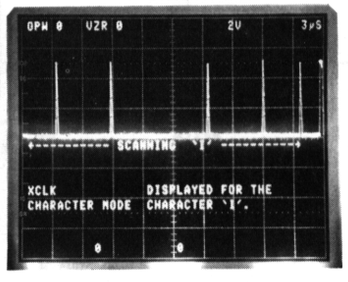

31

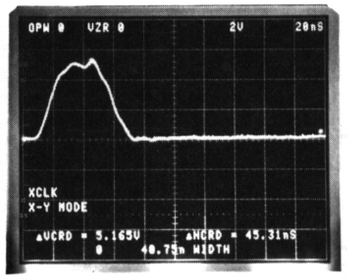

32

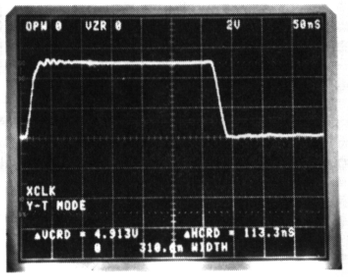

33

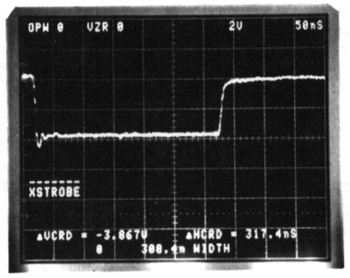

34

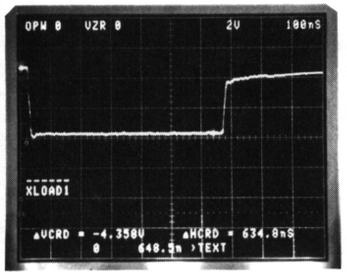

35

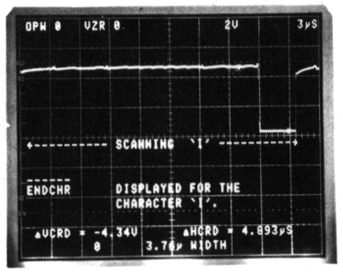

36

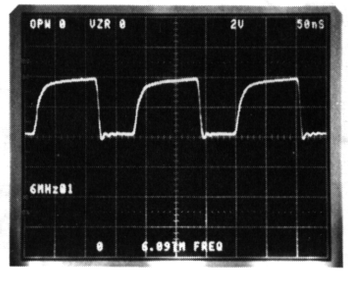

37

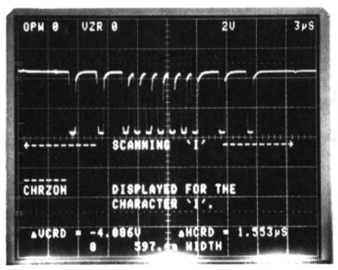

38

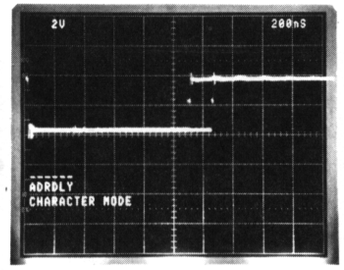

39

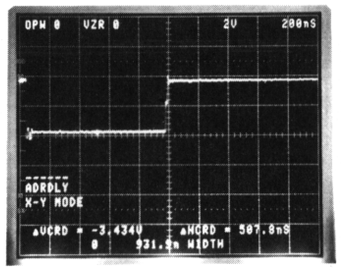

40

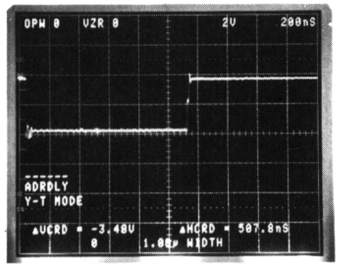

41

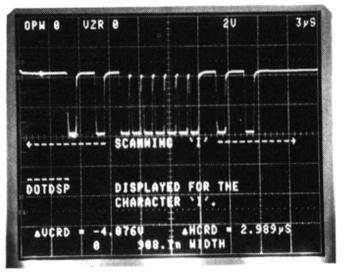

42

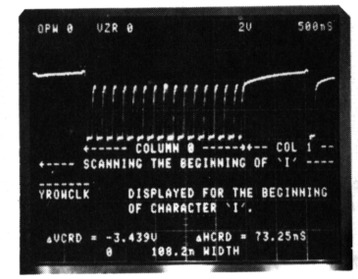

43

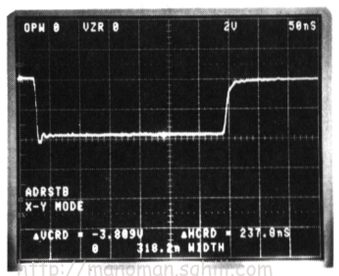

44

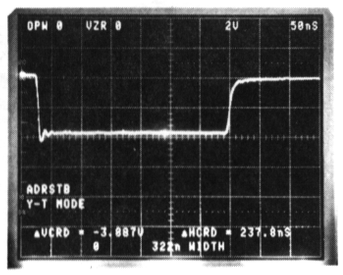

45

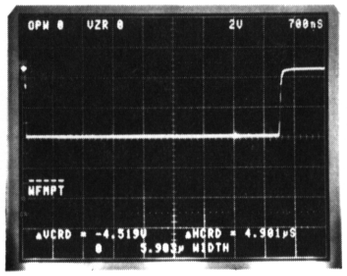

46

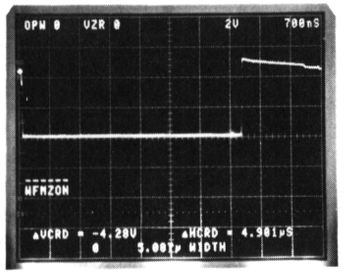

http://manoman.sqhit.com

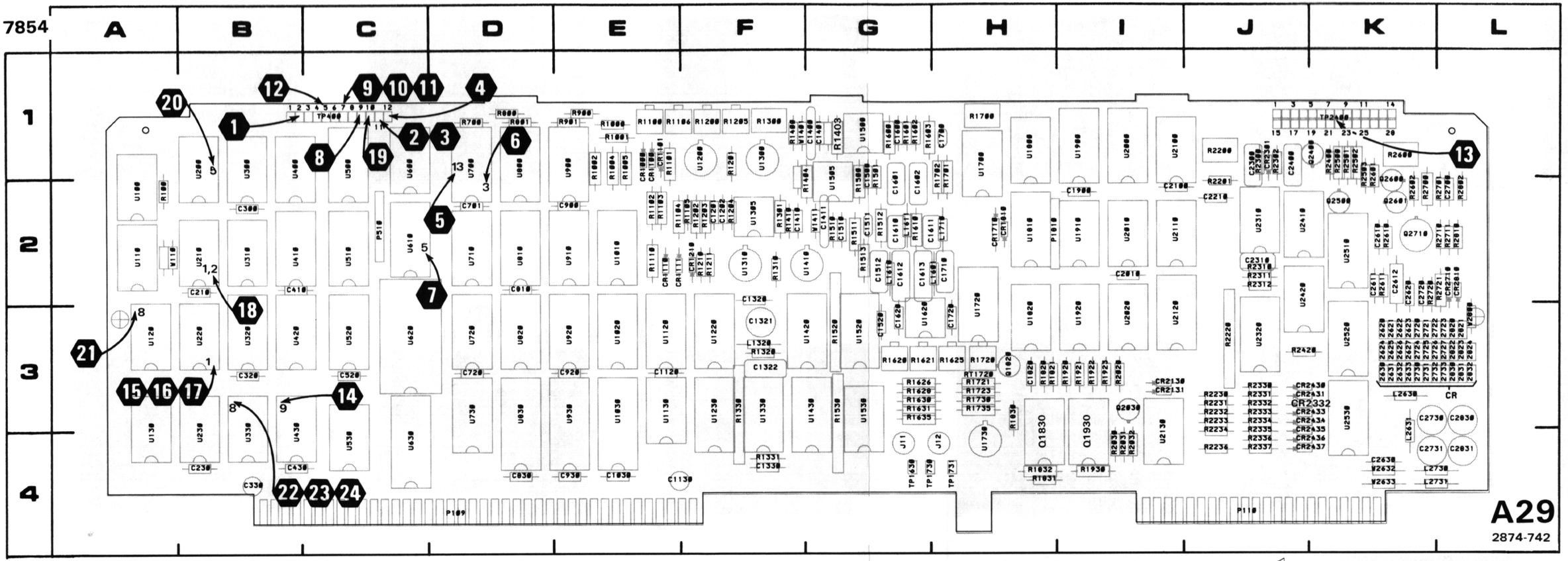

Figure 7-45. A29—Display circuit board assembly.

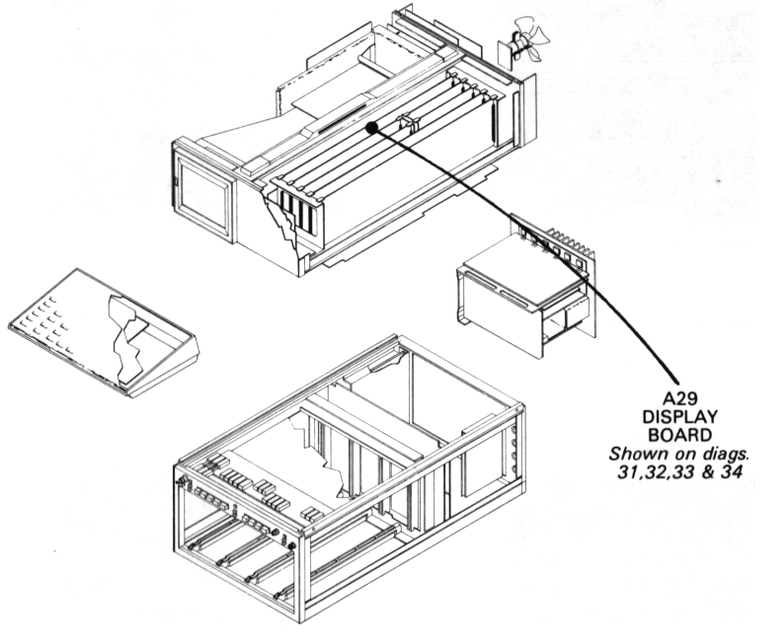

Static Sensitive Devices
See Maintenance Section

COMPONENT NUMBER EXAMPLE

Component Number

A23 A2 R1234

Assembly Number — *Subassembly Number (if used)* — *Schematic Circuit Number*

Chassis-mounted components have no Assembly Number prefix—see end of Replaceable Electrical Parts List.

VERTICAL DISPLAY AND CONTROL DIAGRAM 32

PARTIAL A29 ASSY

CIRCUIT NUMBER	SCHEM LOCATION	BOARD LOCATION
P109	A1	D4
P109	E3	D4
R1520E	A5	G3
TP400	A3	C1
TP400	A4	C1
TP400	A2	C1
TP400	A5	C1
TP400	B2	C1
TP400	C5	C1
TP400	C1	C1
TP400	E3	C1
TP2400	C4	K1
U100A	G2	A2
U120A	B1	A3
U120B	A5	A3
U120C	D5	A3
U120D	B1	A3
U200A	C2	B1
U200B	A5	B1
U200D	D5	B1
U210A	D4	B2
U210C	E1	B2
U210D	G3	B2
U220A	C3	B3
U230A	D3	B4
U230B	E4	B4
U300A	C3	B1
U300B	C1	B1
U310A	B2	B2
U310B	B1	B2
U310C	C5	B2
U310D	C1	B2
U320A	D3	B3
U320B	B3	B3
U320C	C3	B3
U320E	D3	B3
U320F	D3	B3
U330	E4	B4
U400B	D3	B1
U400C	C1	B1
U400D	E5	B1
U410A	C5	B2
U420	B1	B3
U430A	B4	C4
U430B	B3	C4
U500	E1	C1
U510	F1	C2
U520	B2	C3
U530A	E3	C4
U530B	G4	C4
U600A	G3	C1
U600B	G3	C1
U600C	G3	C1
U600D	G4	C1
U610	G3	C2
U620	F2	C3
U630	B4	C4
U700	F2	D1
U710	F1	D2
U720	D2	D2
U730	D1	D3
U800	F1	D1
U1530C	F3	G3
U1700A	B5	H1
U1820C	C4	H3
U1910D	B3	I2
U2110B	C4	I2
W110	B1	A2

Partial A29 ASSY also shown on diagrams 31, 33 and 34.

http://manoman.sqhill.com

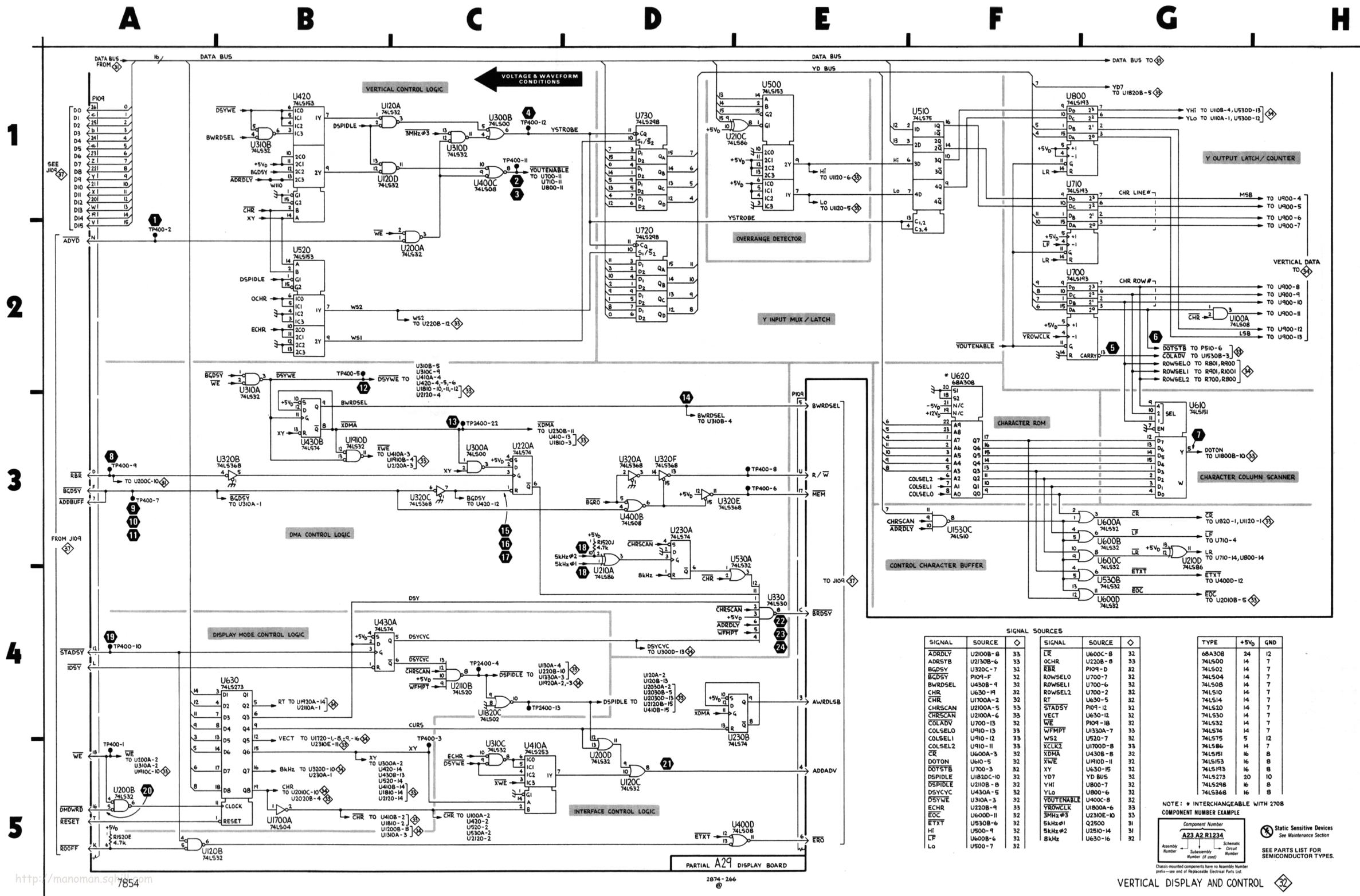

SIGNAL SOURCES

SIGNAL	SOURCE	◇
$\overline{\text{ADRDLY}}$	U2100B-8	33
ADRSTB	U2130B-6	33
BGDSY	U320C-7	32
$\overline{\text{BGDSY}}$	P109-F	32
BWRDSEL	U430B-9	32
CHR	U630-19	32
$\overline{\text{CHR}}$	U1700A-2	32
CHRSCAN	U2100A-5	33
$\overline{\text{CHRSCAN}}$	U2100A-6	33
$\overline{\text{COLADV}}$	U700-13	32
COLSEL0	U910-13	33
COLSEL1	U910-12	33
COLSEL2	U910-11	33
$\overline{\text{CR}}$	U600A-3	32
DOTON	U610-5	32
$\overline{\text{DOTSTB}}$	U700-3	32
DSPIDLE	U1820C-10	32
$\overline{\text{DSPIDLE}}$	U2110B-8	32
DSYCYC	U430A-5	32
$\overline{\text{DSYWE}}$	U310A-3	32
ECHR	U220B-9	33
$\overline{\text{EOC}}$	U600D-11	32
$\overline{\text{ETXT}}$	U530B-6	32
Hi	U500-9	32
$\overline{\text{LF}}$	U600B-6	32
Lo	U500-7	32

SIGNAL	SOURCE	◇
$\overline{\text{LR}}$	U600C-8	32
OCHR	U220B-8	33
$\overline{\text{RBR}}$	P109-D	32
ROWSEL0	U700-7	32
ROWSEL1	U700-6	32
ROWSEL2	U700-2	32
RT	U630-5	32
$\overline{\text{STADSY}}$	P109-12	32
VECT	U630-12	32
$\overline{\text{WE}}$	P109-18	32
$\overline{\text{WFMPT}}$	U1330A-7	33
WS2	U520-7	32
$\overline{\text{XCLK2}}$	U1700D-8	33
$\overline{\text{XDMA}}$	U430B-8	32
$\overline{\text{XWE}}$	U1910D-11	32
XY	U630-15	32
YD7	YD BUS	32
YHi	U800-7	32
YLo	U800-6	32
$\overline{\text{YOUTENABLE}}$	U400C-8	32
$\overline{\text{YROWCLK}}$	U1800A-6	33
$\overline{\text{3MHz}\phi 3}$	U2310E-10	33
5kHzϕ1	Q2500	31
5kHzϕ2	U2510-14	31
8kHz	U630-16	32

TYPE	$+5V_D$	GND
68A308	24	12
74LS00	14	7
74LS02	14	7
74LS04	14	7
74LS08	14	7
74LS10	14	7
74LS14	14	7
74LS20	14	7
74LS30	14	7
74LS32	14	7
74LS74	14	7
74LS75	5	12
74LS86	14	7
74LS151	16	8
74LS153	16	8
74LS193	16	8
74LS273	20	10
74LS298	16	8
74LS368	16	8

NOTE: * INTERCHANGEABLE WITH 2708

COMPONENT NUMBER EXAMPLE

Component Number: A23 A2 R1234 — Assembly Number, Subassembly Number (if used), Schematic Circuit Number

Chassis-mounted components have no Assembly Number prefix—see end of Replaceable Electrical Parts List.

Static Sensitive Devices — See Maintenance Section

SEE PARTS LIST FOR SEMICONDUCTOR TYPES.

VERTICAL DISPLAY AND CONTROL 32

http://manoman.sqhill.com

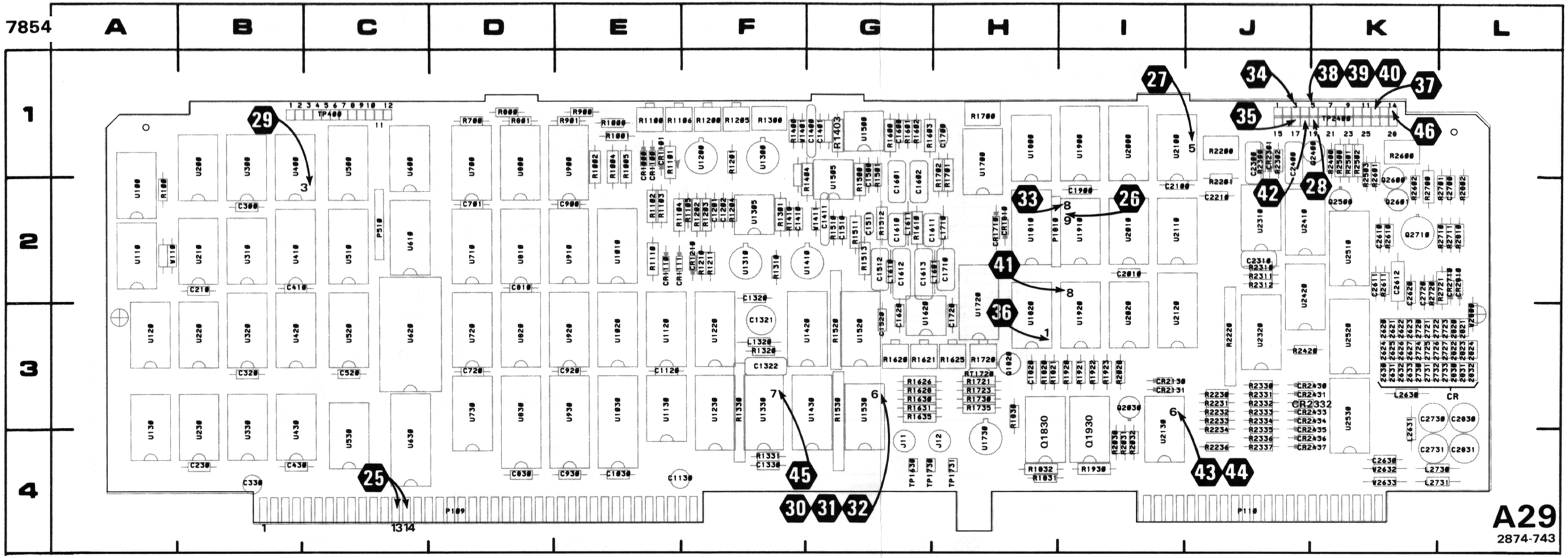

Figure 7-46. A29—Display circuit board assembly.

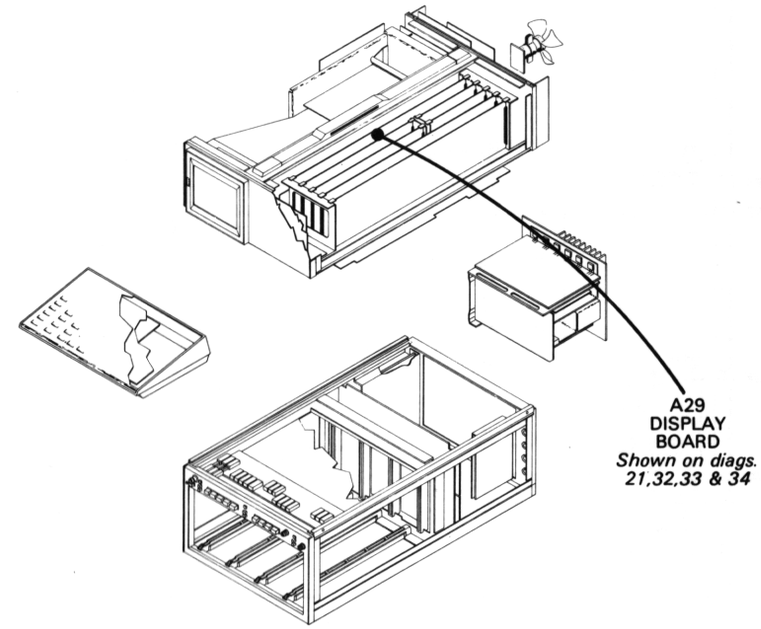

Static Sensitive Devices
See Maintenance Section

COMPONENT NUMBER EXAMPLE

Component Number
A23 A2 R1234
Assembly Number — *Subassembly Number (if used)* — *Schematic Circuit Number*

Chassis-mounted components have no Assembly Number prefix—see end of Replaceable Electrical Parts List.

http://manoman.sqhill.com

PARTIAL A29 ASSY

CIRCUIT NUMBER	SCHEM LOCATION	BOARD LOCATION
C1322	C4	F3
C2210	B1	J2
P109	A1	D4
P510	A1	C2
P510	A2	C2
P1810	A1	H2
P1810	A3	H2
R100	C2	A2
R1320	C4	F3
R1530C	C4	G3
R1700	C4	H1
R2201	B1	J2
TP2400	C5	K1
TP2400	C3	H2
TP2400	D4	K1
TP2400	D1	K1
TP2400	F2	K1
TP2400	F3	K1
U110C	F1	A2
U110D	D4	A2
U130A	B2	A3
U220B	C2	B3
U300C	F1	B1
U400A	C2	B1
U410B	C2	B2
U810	E2	D2
U820	G1	D2
U910	G2	E2
U920	E2	E3
U1020	D2	E3
U1120	G1	E3
U1330A	C5	F3
U1530A	D5	G3
U1530B	C1	G3
U1700B	A1	H1
U1700C	D1	H1
U1700D	D1	H1
U1800A	F3	H1
U1800B	D3	H1
U1810	C1	H2
U1820A	A3	H3
U1820B	E3	H3
U1900	B3	I1
U1910B	B1	I2
U1910C	C1	I2
U1920B	E3	I3
U2000	B3	I1
U2010A	C1	I2
U2010B	F2	I2
U2020A	B3	I3
U2020B	F2	I3
U2020C	A4	I3
U2020D	C3	I3
U2100A	B2	I1
U2100B	D4	I1
U2120A	B2	I3
U2120B	B4	I3
U2130A	C1	I4
U2130B	B5	I4
U2130D	C1	I4
U2310E	B2	J2

Partial A29 ASSY also shown on diagrams 31, 32 and 34.

http://manoman.sqhill.com

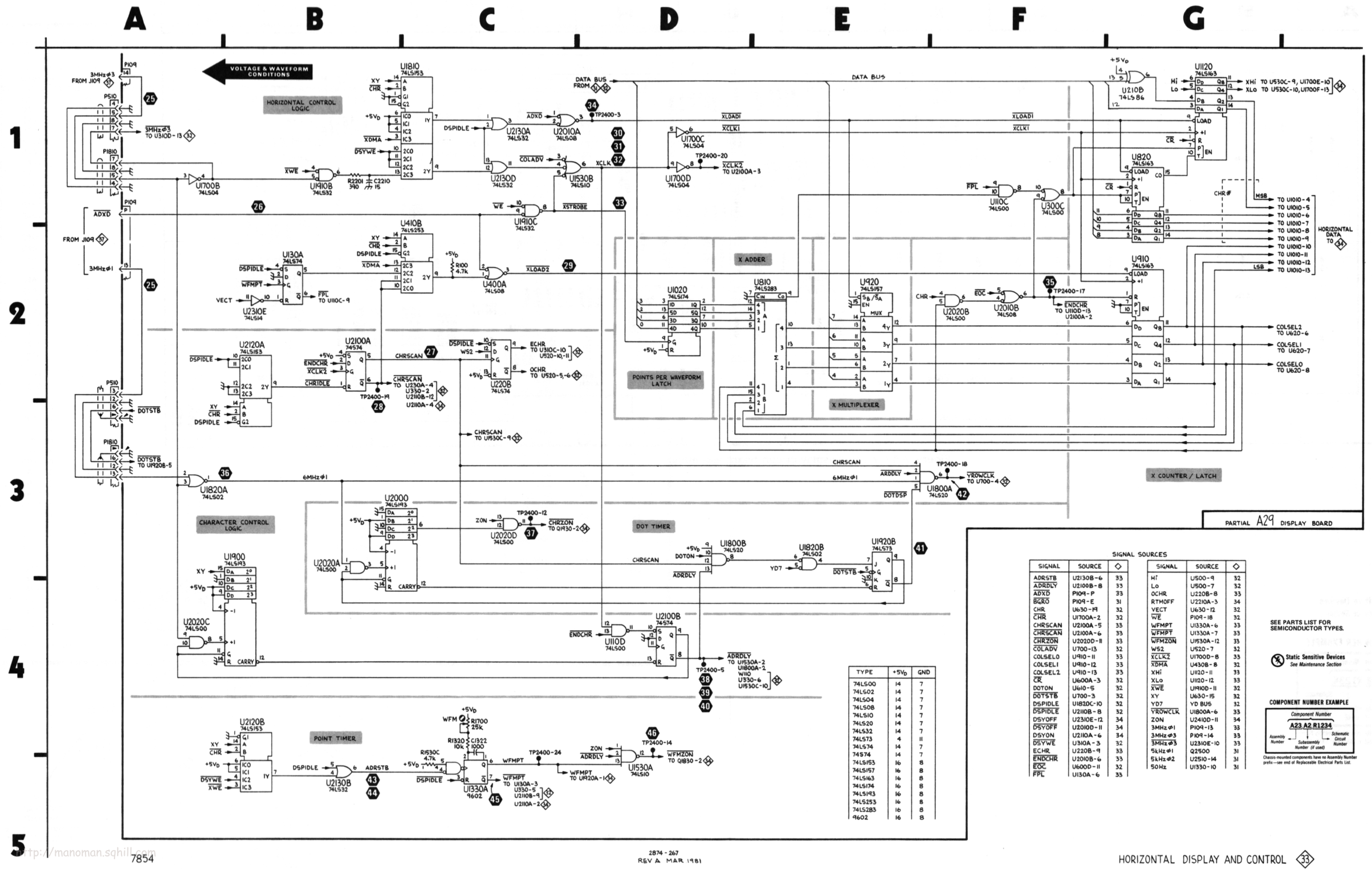

http://manoman.sqhill.com

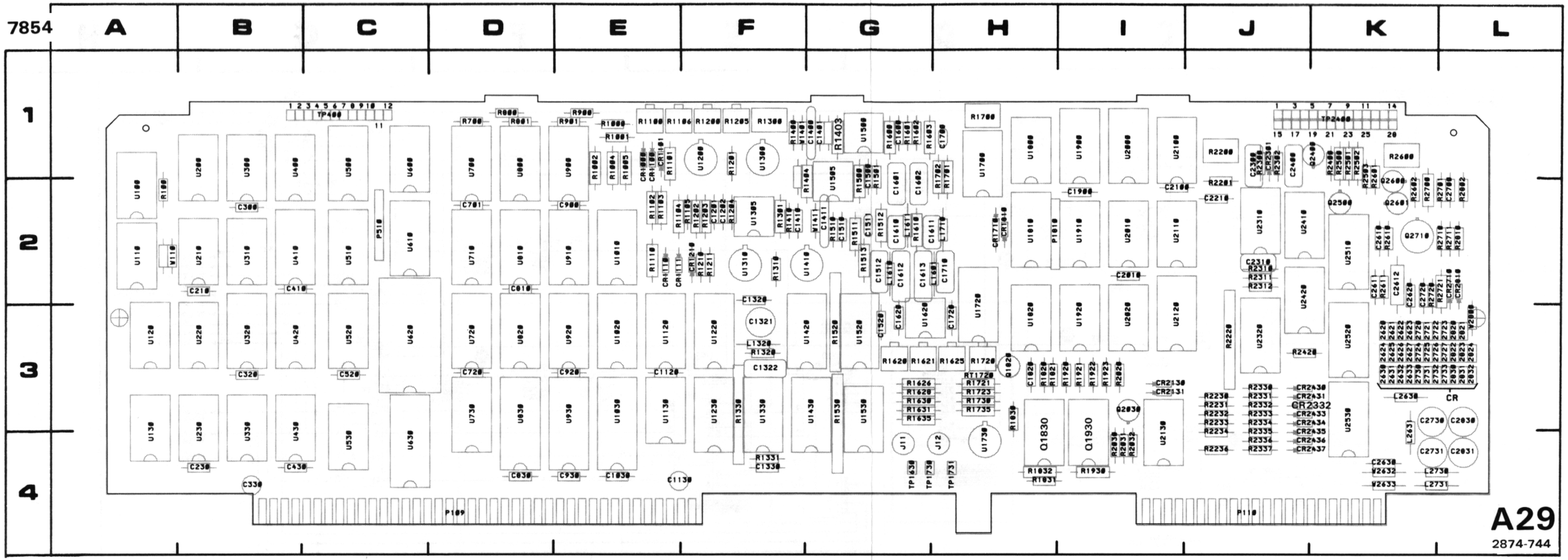

Figure 7-47. A29—Display circuit board assembly.

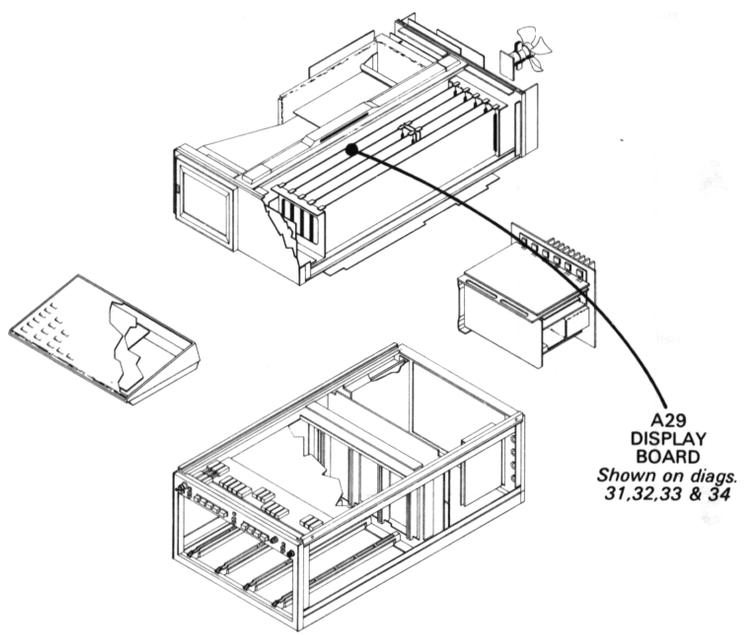

Static Sensitive Devices
See Maintenance Section

COMPONENT NUMBER EXAMPLE

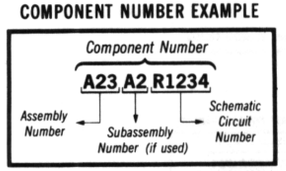

Chassis-mounted components have no Assembly Number prefix—see end of Replaceable Electrical Parts List.

http://manoman.sqhill.com

DISPLAY D/A AND AMPLIFIER DIAGRAM 34

PARTIAL A29 ASSY

CIRCUIT NUMBER	SCHEM LOCATION	BOARD LOCATION
C410	B2	B2
C1201	B2	F2
C1202	B1	F2
C1321	A2	F3
C1400	E1	G1
C1401	F2	G1
C1410	B2	F2
C1411	E3	G2
C1500	F2	G1
C1500	F3	G1
C1510	F2	G2
C1511	E3	G2
C1512	F3	G2
C1600	E2	G1
C1601	E3	G1
C1602	E1	G1
C1610	F3	G2
C1611	F1	G2
C1612	F3	G2
C1613	F1	G2
C1620	F2	G3
C1700	E1	H1
C1710	F1	H2
C1720	F2	H3
C1820	B1	H3
C2300	F5	J1
C2310	F4	J2
C2400	F5	J1
CR1000	C1	E1
CR1100	C1	E1
CR1101	C1	E1
CR1110	C3	E2
CR1111	C3	E2
CR1210	C3	F2
CR1710	E4	H2
CR1810	E4	H2
CR2130	G4	I3
CR2131	G4	I3
CR2301	F5	J1
J11	G1	G4
J12	G3	G4
L1320	A2	F3
L1601	F1	G2
L1610	F3	G2
L1611	E3	G2
L1710	E1	H2
P109	A1	D4
P109	G4	D4
P110	A4	J4
P110	G1	J4
Q1820	F4	H3
Q1830A	B1	H4
Q1830B	B1	H4
Q1830C	G4	H4
Q1830D	F4	H4
Q1830E	A1	H4
Q1930A	B1	I3
Q1930B	B1	I3
Q1930E	A1	I3
Q2030	G4	I3
R700	D2	D1
R800	D2	D1
R801	D2	D1
R900	D2	E1
R901	D2	E1
R1000	D2	E1
R1001	D2	E1
R1002	C2	E1
R1004	C2	E1
R1005	C2	E1
R1100	E2	E1
R1101	D1	E1
R1102	C3	E2
R1103	C3	E2
R1104	D3	E2
R1105	C4	E2
R1106	D2	E1
R1110	C4	E2
R1200	D4	F1
R1201	D1	F1
R1202	A2	F2
R1203	B2	F2
R1204	B1	F2
R1205	D3	F1
R1210	E4	F2
R1211	E4	F2
R1300	E3	F1
R1301	A2	F2
R1310	D3	F2
R1400	D2	F1
R1403	E1	F2
R1404	E3	F2
R1410	B2	F2
R1500	E3	G1
R1501	E3	G1
R1510	D3	G2
R1511	E3	G2
R1512	E3	G2
R1513	E3	G2
R1600	E1	G1
R1601	E1	G1
R1602	E2	G1
R1603	E1	G1
R1610	E3	G2
R1620	F3	G3
R1621	F3	G3
R1625	F1	H3
R1626	F3	G3
R1628	F3	G3
R1630	F3	G3
R1631	F3	G3
R1635	F2	G3
R1701	E1	H1
R1702	E1	H1
R1720	F1	H3
R1721	G3	H3
R1723	F1	H3
R1730	F1	H3
R1735	F1	H3
R1820	F4	H3
R1821	F4	H3
R1830	F4	H3
R1831	A1	H4
R1832	A1	H4
R1920	F4	I3
R1922	A1	I3
R1923	A1	I3
R1930	A1	I4
R2020	G4	I3
R2030	A1	I4
R2031	B1	I4
R2032	B1	I4
R2231	G4	J3
R2233	G5	J3
R2300	F5	J1
R2302	F5	J1
R2310	F4	J2
R2311	F4	J2
R2312	F5	J2
RT1720	G3	H3
TP1630	G1	G4
TP1730	G2	G4
TP1731	G3	H4
TP2400	A4	K1
TP2400	F4	K1
TP2400	G5	K1
TP2400	G4	K1
U110A	D2	A2
U110B	D1	A2
U300D	B5	B1
U320D	A5	B3
U530C	D3	C4
U530D	D1	C4
U900	C2	E1
U1010	C3	E2
U1200A	D1	F1
U1200B	E2	F1
U1300	D2	F1
U1305	B2	F2
U1310A	D4	F2
U1310B	D3	F2
U1410	D3	F2
U1500	E1	G1
U1505	E3	G1
U1620A	F1	G3
U1620B	F3	G3
U1700E	D3	H1
U1700F	D3	H1
U1720	G1	H3
U1730	G4	H4
U1820D	F5	H3
U1920A	C4	I3
U2010C	G4	I2
U2010D	D4	I2
U2110A	B5	I2
U2310A	F5	J2
U2310B	F4	J2
U2310D	F5	J2
U2310E	E4	J2
U2410A	C5	J2
U2410D	F5	J2
W1401	E1	F1
W1411	E3	G2

Partial A29 ASSY also shown on diagrams 31, 32 and 33.

http://manoman.sqhill.com

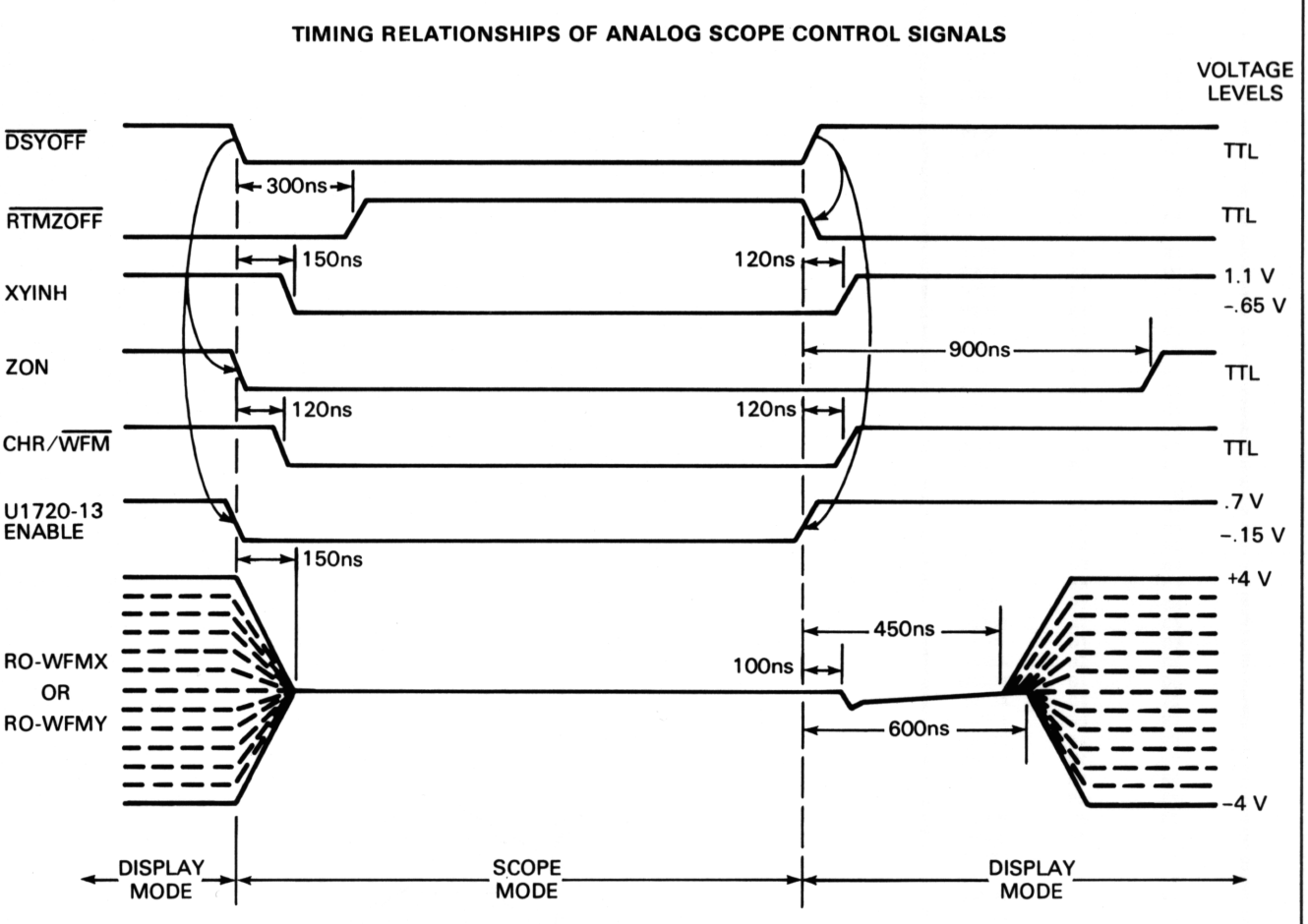

Note: All times are approximate. Actual times will vary depending upon individual components.

2874-761

Figure 7-48. Display D/A and Amplifier Timing Diagram.

http://manoman.sqhill.com

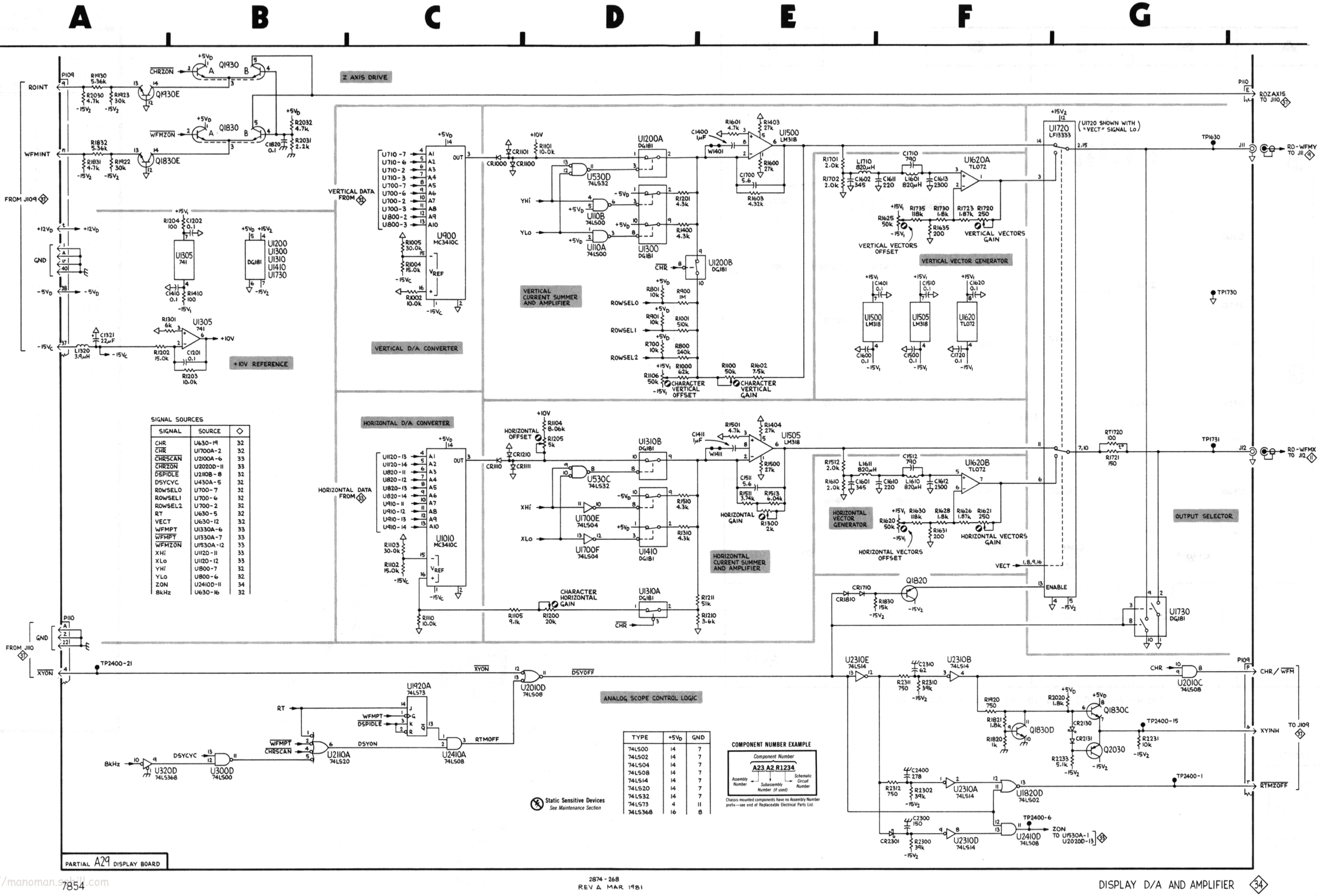

http://manoman.tekhill.com

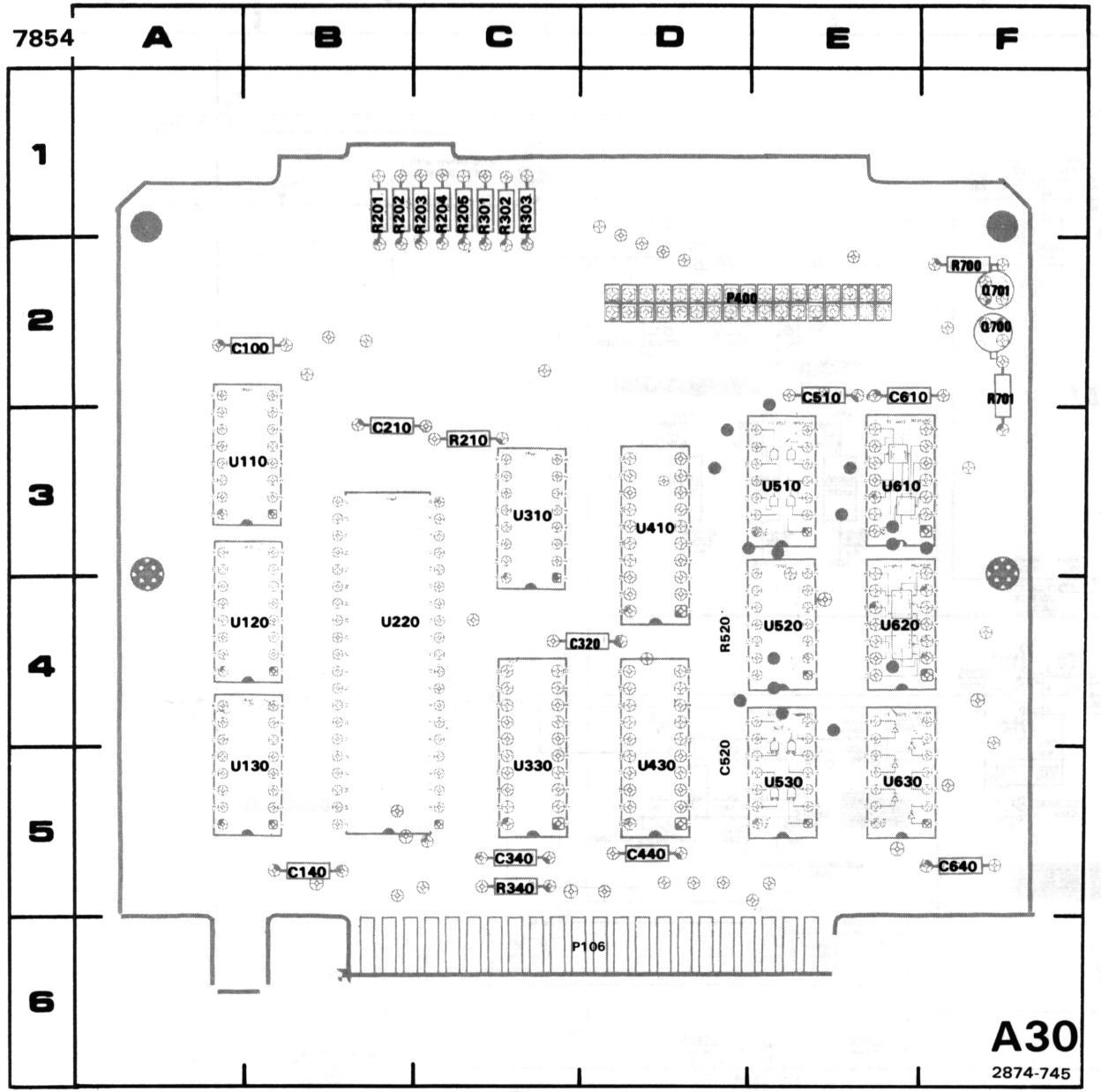

Figure 7-49. A30—GPIB circuit board assembly.

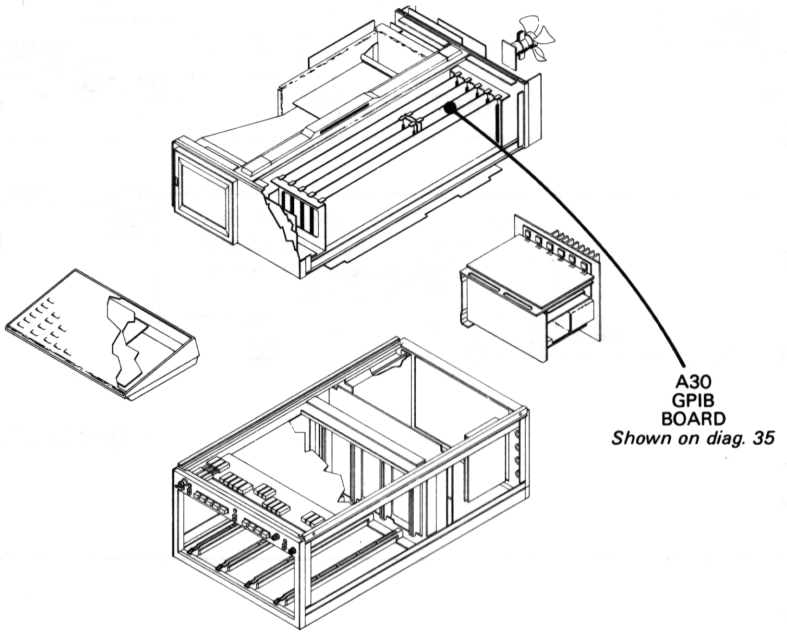

REV A MAR 1981

A30 ASSY

CIRCUIT NUMBER	SCHEM LOCATION	BOARD LOCATION
C100	A1	B2
C140	A2	B5
C210	A2	B3
C320	A1	D4
C340	A2	C5
C440	A2	D5
C510	A1	E2
C610	A2	E2
C640	A2	F5
P106	A1	C5
P400	F1	D2
Q700	D5	F2
Q701	D5	F2
R201	E1	B1
R202	E1	B1
R203	E1	C1
R204	E1	C1
R205	E1	C1
R210	D4	C3
R301	E1	C1
R302	E1	C1
R303	E1	C1
R340	C3	C5
R700	D5	F2
R701	D5	F2
U110	E4	B3
U120	E2	B4
U130	E2	B5
U220	D2	B4
U310	E3	C3
U330A	B1	C5
U330B	B2	C5
U410	D1	D3
U430A	B2	D5
U430B	B1	D5
U510A	B3	E3
U510B	B3	E3
U510C	B4	E3
U510D	C4	E3
U520	B4	E4
U530A	B2	E5
U530B	C5	E5
U530C	A5	E5
U530D	B3	E5
U610A	C4	E3
U610B	C3	E3
U620A	A4	E4
U620B	B4	E4
U630A	A3	E5
U630B	B5	E5
U630C	D3	E5
U630D	D4	E5
U630E	B3	E5
U630F	C5	E5

http://manoman.sqhill.com

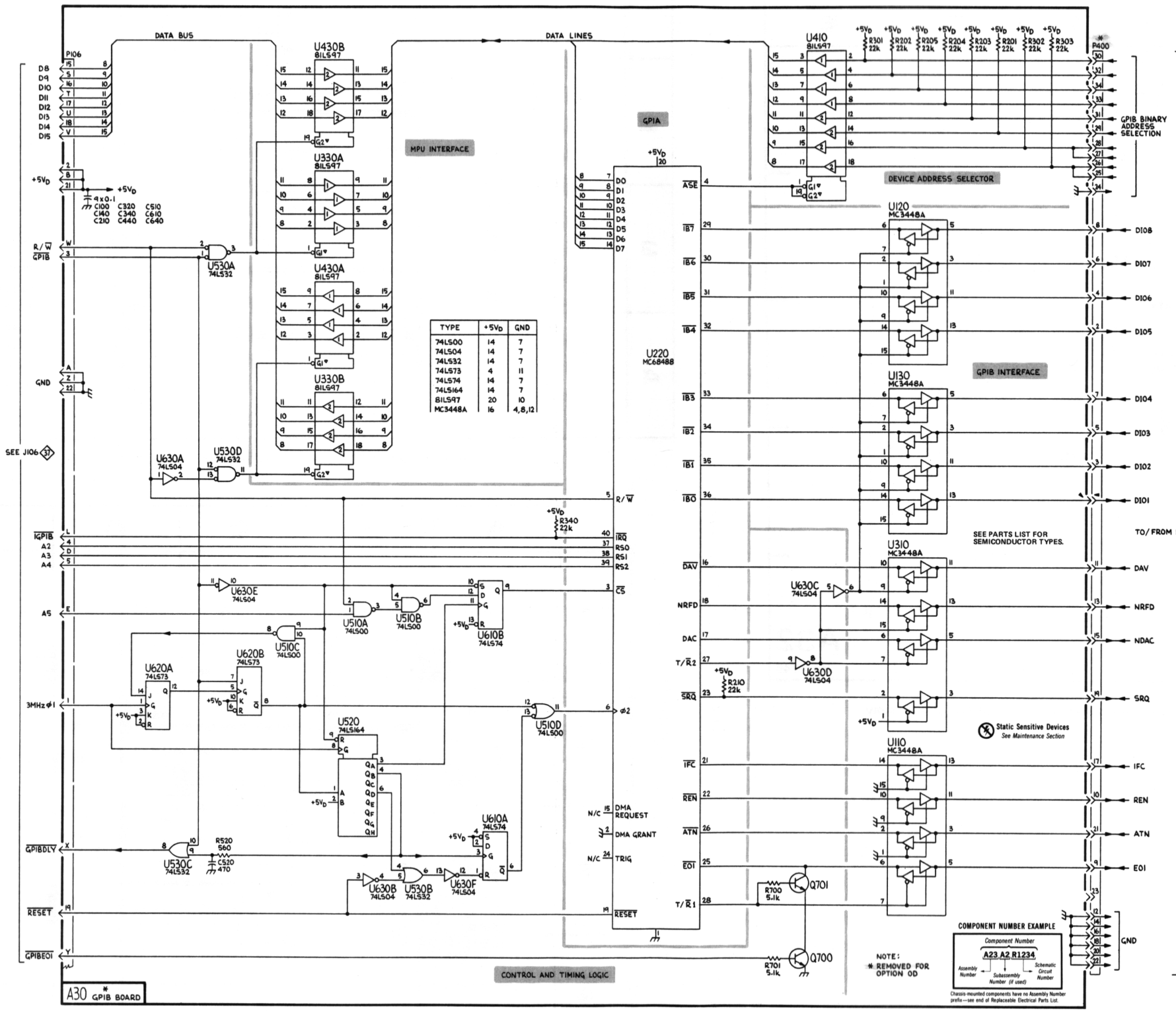

http://manohan.sqhill.com

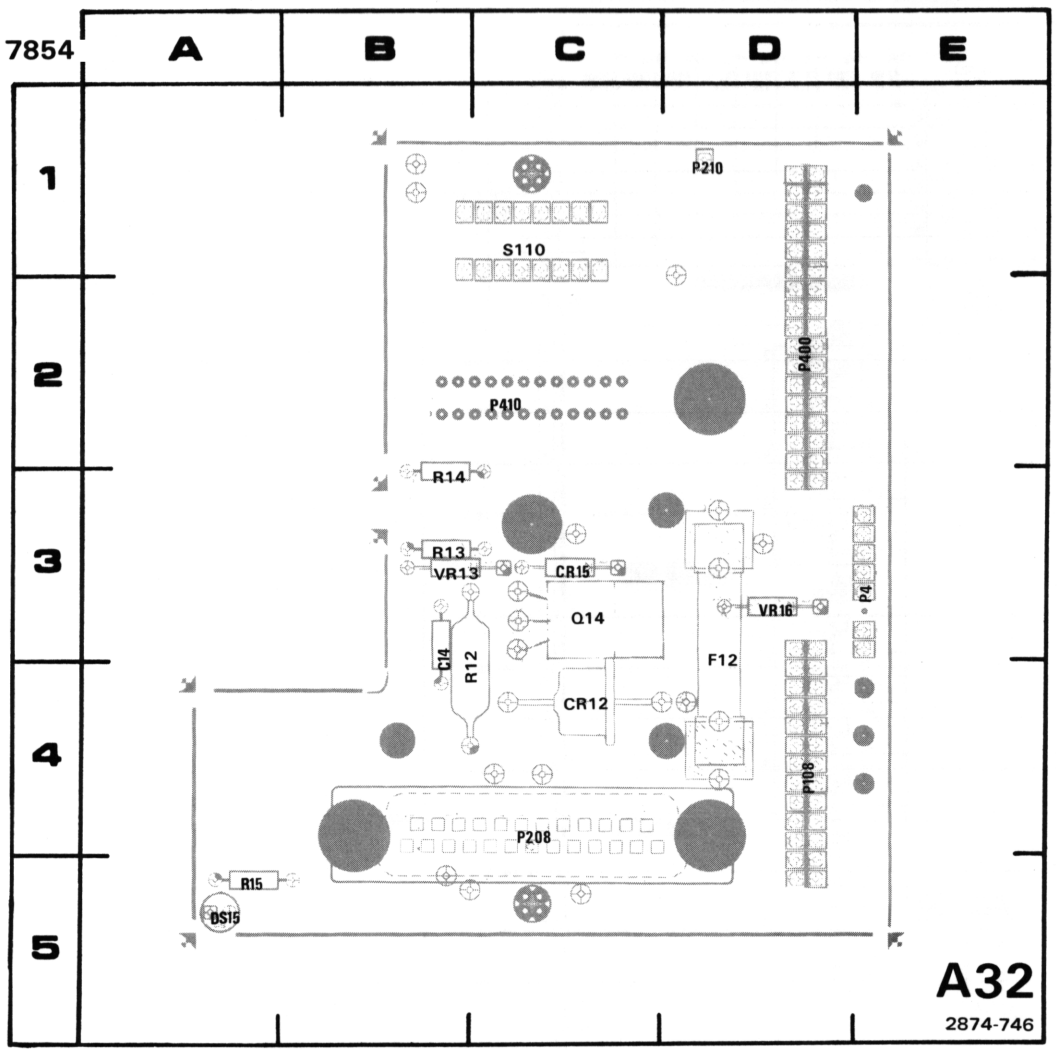

Figure 7-50. A32—Rear Panel Connector circuit board assembly.

REV A MAR 1981

COMPONENT NUMBER EXAMPLE

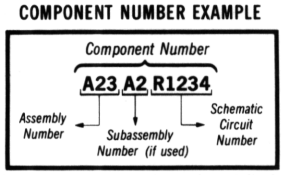

Chassis-mounted components have no Assembly Number prefix—see end of Replaceable Electrical Parts List.

Static Sensitive Devices
See Maintenance Section

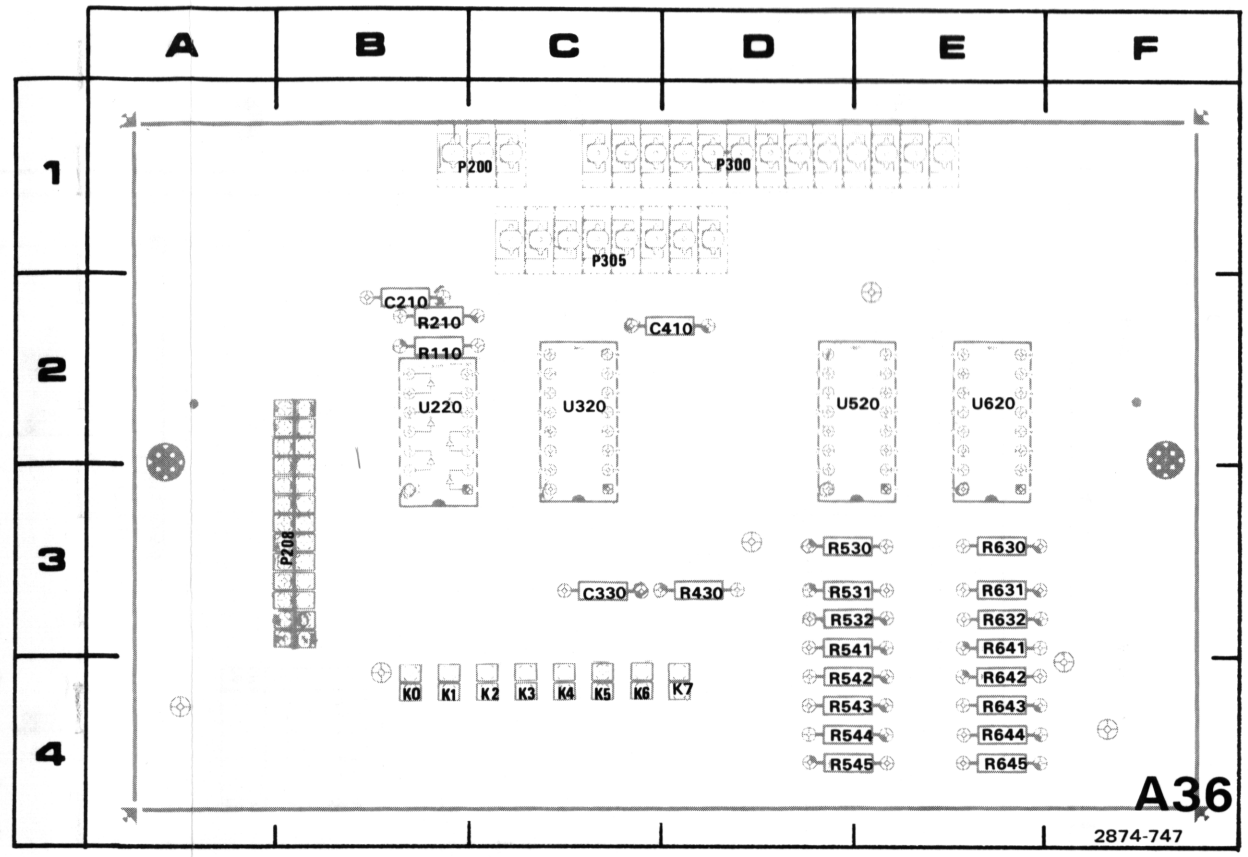

Figure 7-51. A36—Calculator Keyboard circuit board assembly.

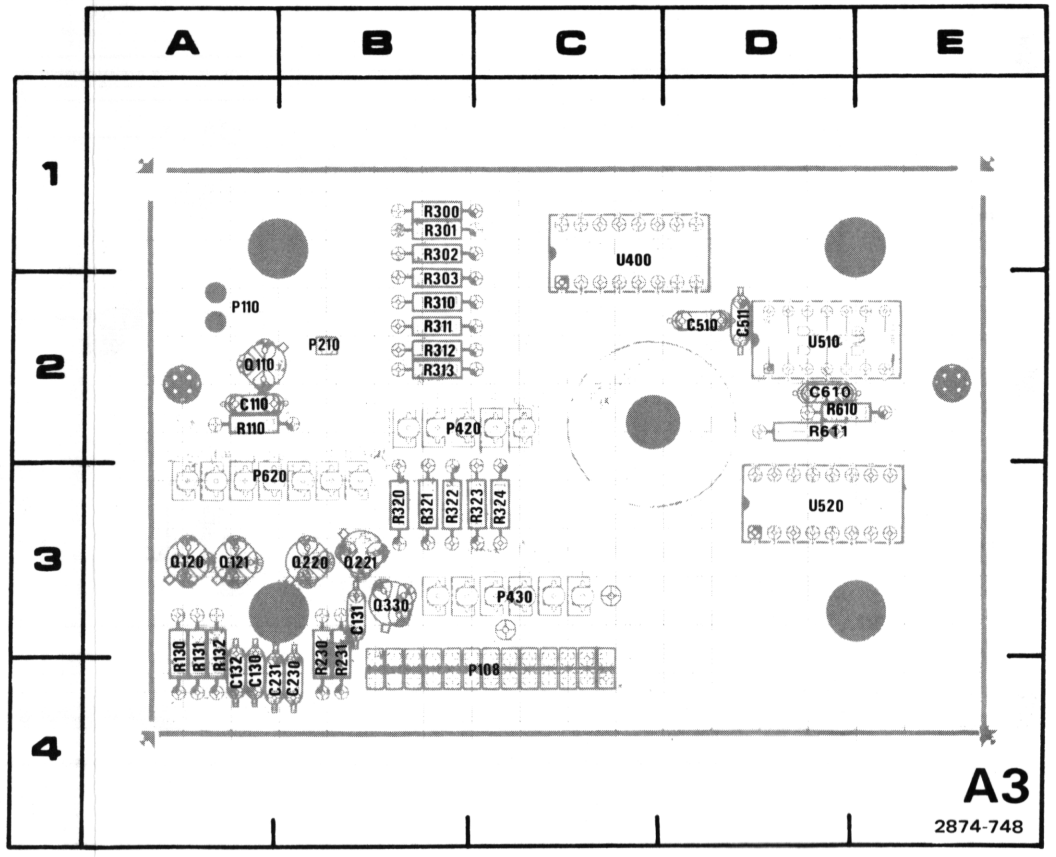

Figure 7-52. A3—Front Panel Keyboard Electronics circuit board assembly.

http://manoman.sqhill.com

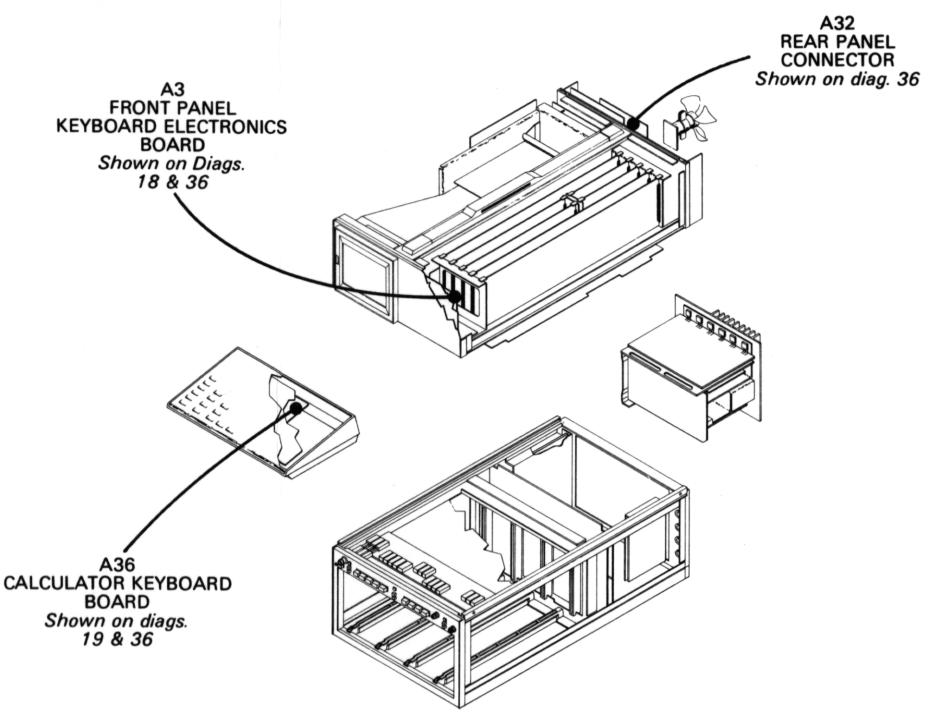

PARTIAL A3 ASSY

CIRCUIT NUMBER	SCHEM LOCATION	BOARD LOCATION
P108	E1	C3

Partial A3 ASSY also shown on diagram 18.

PARTIAL A27 ASSY

CIRCUIT NUMBER	SCHEM LOCATION	BOARD LOCATION
P108	D1	C1

Partial A27 ASSY also shown on diagrams 27 and 28.

A32 ASSY

CIRCUIT NUMBER	SCHEM LOCATION	BOARD LOCATION
C14	B3	D4
CR12	B3	C4
CR15	B3	C3
DS15	B3	A5
F12	B3	D4
P4	B3	E3
P108	E3	D4
P208	F3	C4
P210	B4	D1
P400	B1	D2
P410	B1	C2
Q14	B3	C3
R12	B3	D4
R13	B3	B3
R14	B3	B3
R15	B3	A5
S110	A2	C1
VR13	B3	B3
VR16	B3	D3

PARTIAL A36 ASSY

CIRCUIT NUMBER	SCHEM LOCATION	BOARD LOCATION
P208	G3	B3

Partial A36 ASSY also shown on diagram 19.

CHASSIS MOUNTED PARTS

CIRCUIT NUMBER	SCHEM LOCATION	BOARD LOCATION
J13	A3	CHASSIS
J14	A3	CHASSIS
J15	A3	CHASSIS
S15	A3	CHASSIS
S16	A4	CHASSIS

http://manoman.sqhill.com

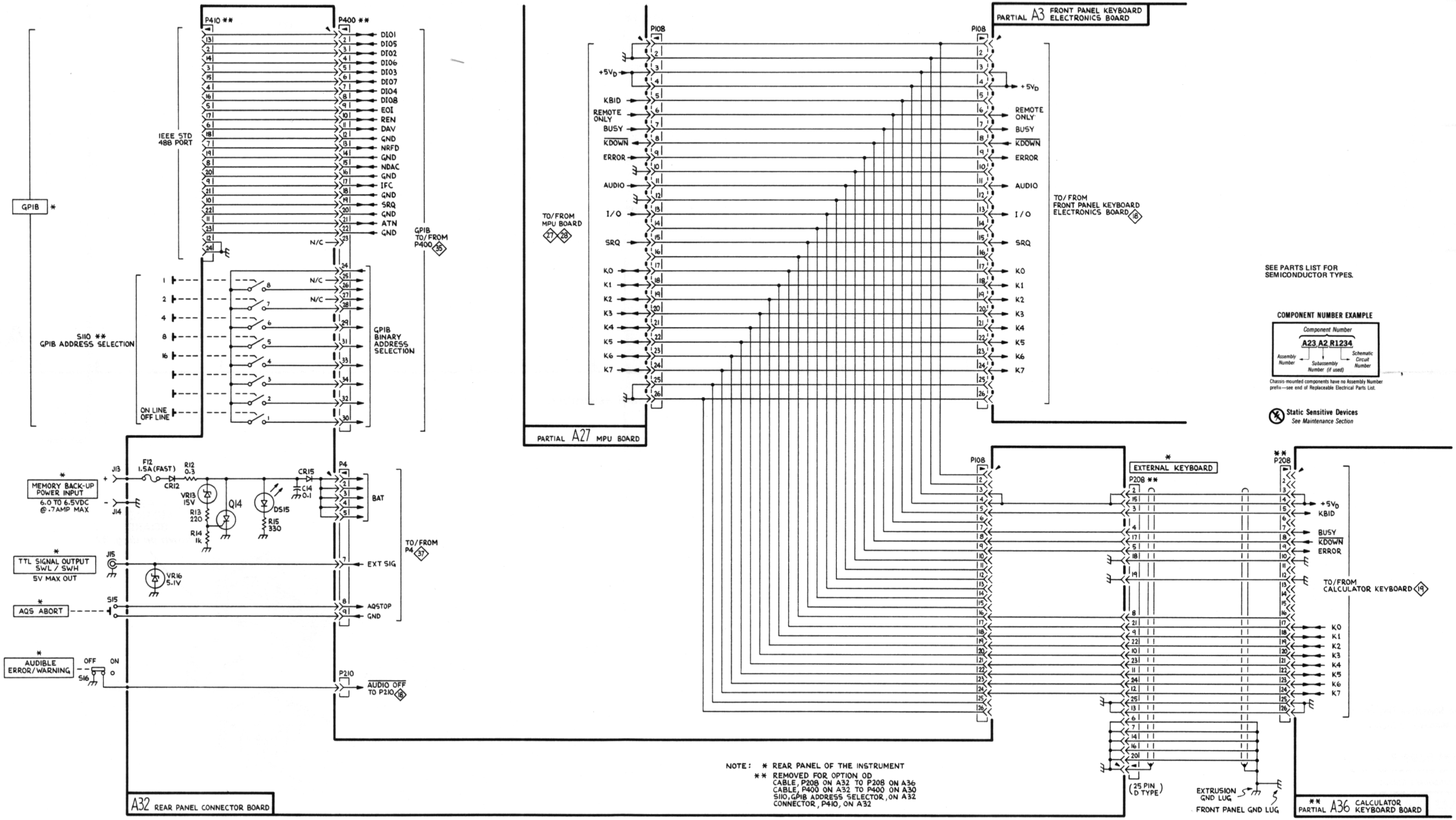

NOTE: * REAR PANEL OF THE INSTRUMENT
** REMOVED FOR OPTION 0D
CABLE, P208 ON A32 TO P208 ON A36
CABLE, P400 ON A32 TO P400 ON A30
S110, GPIB ADDRESS SELECTOR, ON A32
CONNECTOR, P410, ON A32

http://manoman.sqhill.com

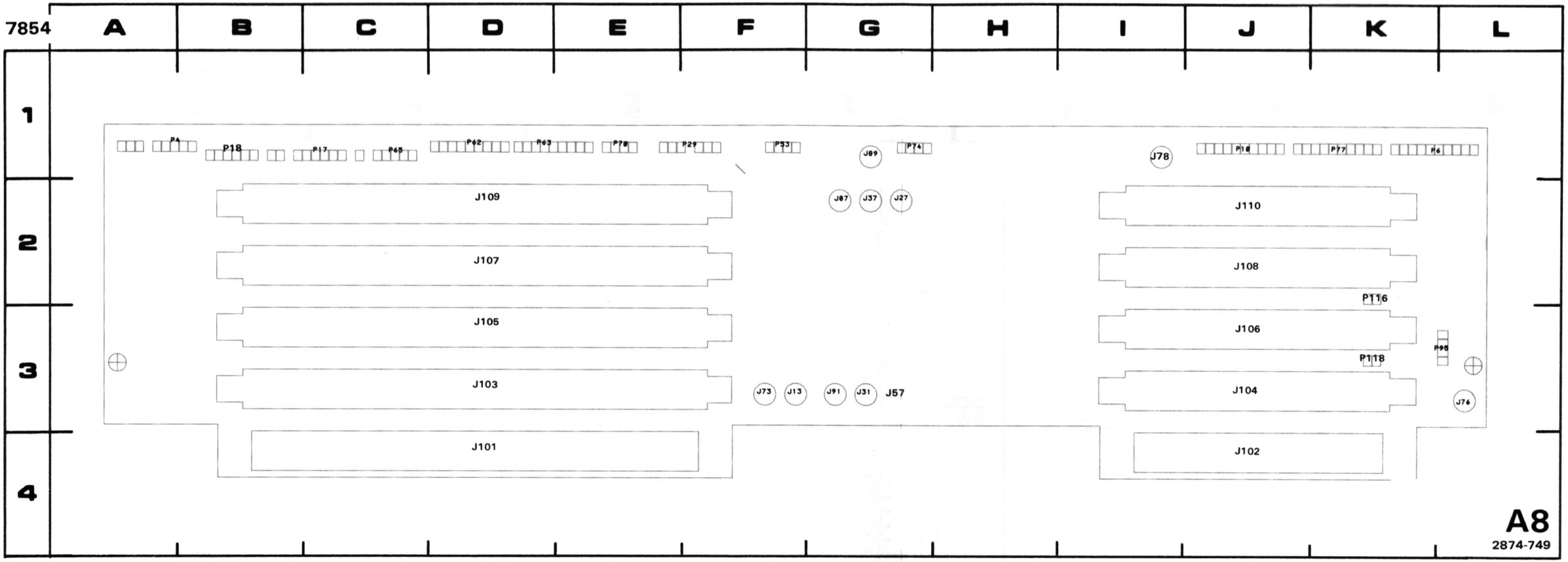

Figure 7-53. A8—Mother circuit board assembly.

REV A MAR 1981

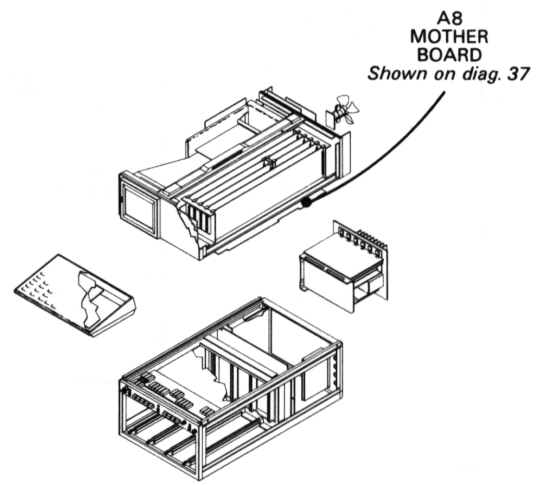

http://manoman.sqhill.com

MOTHER BOARD DIAGRAM 37

A8 ASSY

CIRCUIT NUMBER	SCHEM LOCATION	BOARD LOCATION
J13	B1	F3
J27	D5	G2
J31	C1	G3
J37	D5	G2
J57	B1	G3
J73	B1	F3
J76	B1	L3
J78	C5	I1
J87	D5	G2
J89	D5	G1
J91	C1	G3
J101	D1	D4
J102	A1	J4
J103	D2	D3
J104	A2	J3
J105	D2	D3
J106	A2	J3
J107	D3	D2
J108	A3	J2
J109	D4	D2
J110	A4	J2
P4	G5	A1
P6	A5	K1
P10	B5	B1
P17	G5	C1
P18	D5	B1
P29	C5	F1
P29	D5	F1
P53	C5	F1
P62	E5	D1
P63	E5	D1
P65	F5	C1
P70	F5	E1
P74	C5	G1
P77	B5	K1
P95	A5	L3
P116	A1	K3
P118	A1	K3

http://manoman.sqhill.com

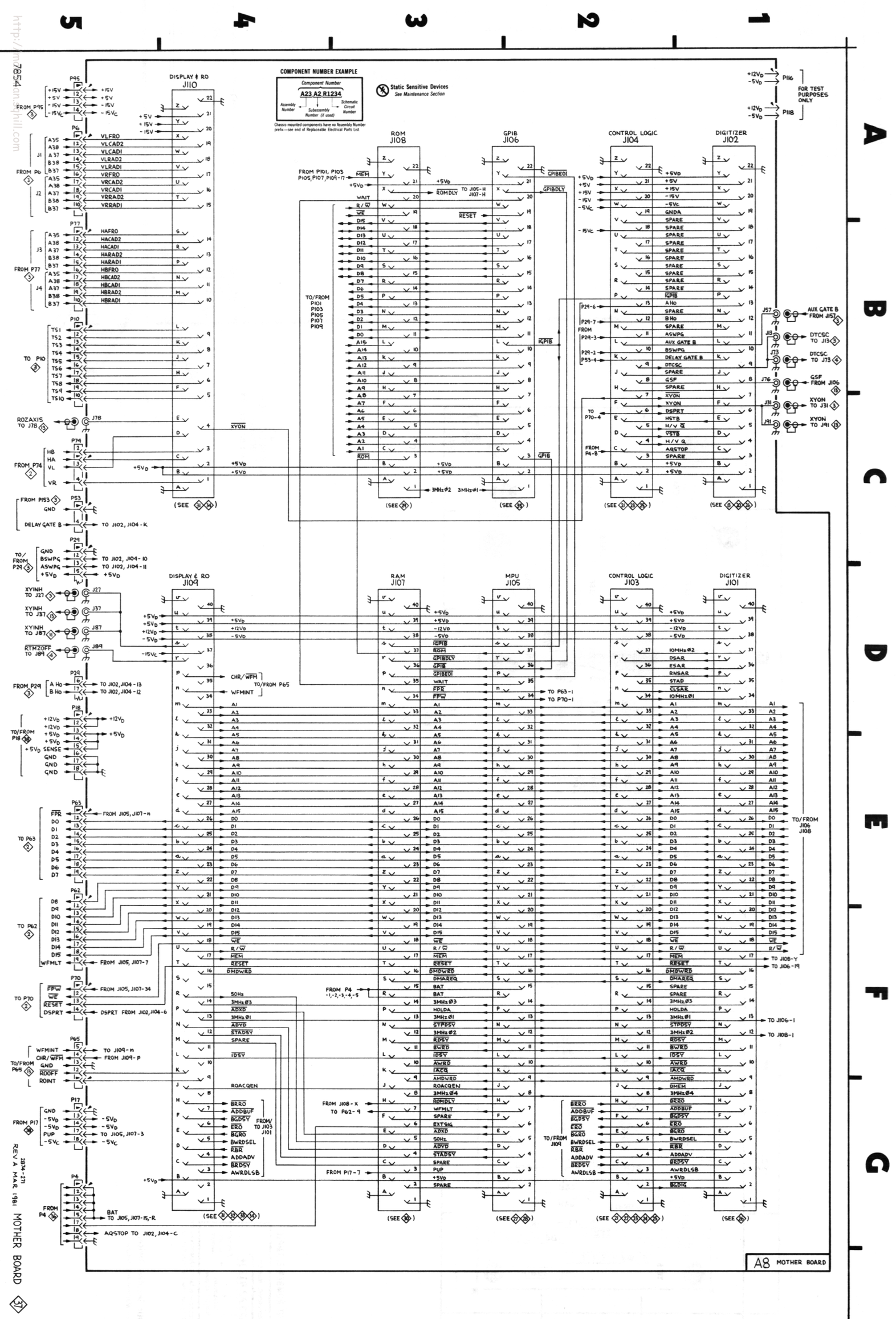
COMPONENT NUMBER EXAMPLE
Component Number
A23 A2 R1234
Assembly Number
Subassembly Number (if used)
Schematic Circuit Number
Chassis-mounted components have no Assembly Number prefix—see end of Replaceable Electrical Parts List.
Static Sensitive Devices
See Maintenance Section
DISPLAY & RO J110
ROM J108
GPIB J106
CONTROL LOGIC J104
DIGITIZER J102
RAM J107
MPU J105
CONTROL LOGIC J103
DIGITIZER J101
DISPLAY & RO J109
FOR TEST PURPOSES ONLY
AUX GATE B FROM J157
DTCSC TO J13
DTCSC TO J73
GSF FROM J106
XYON TO J31
XYON TO J91
XYINH TO J27
XYINH TO J37
XYINH TO J87
RTMZOFF TO J89
ROZAXIS TO J78
BAT TO J105, J107-15,-R
AQSTOP TO J102, J104-C
A8 MOTHER BOARD
REV A MAR 1981
MOTHER BOARD

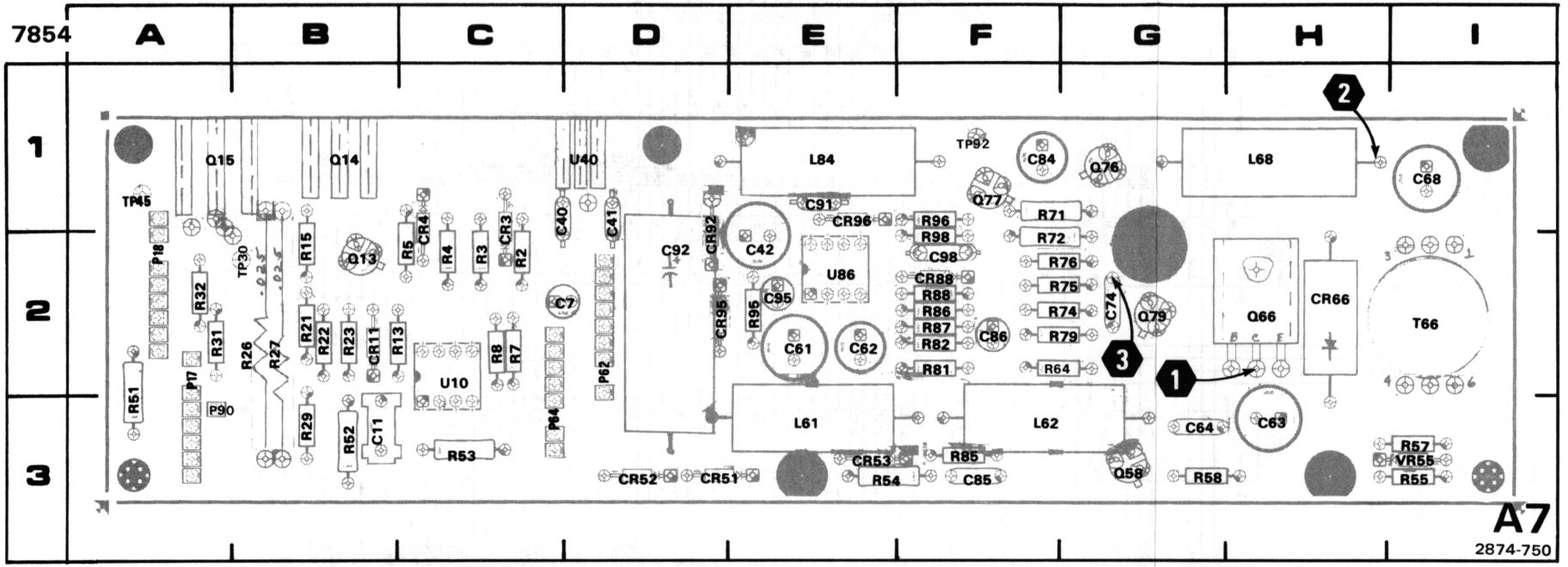

Figure 7-54. A7—Aux Regulator circuit board assembly.

REV A MAR 1981

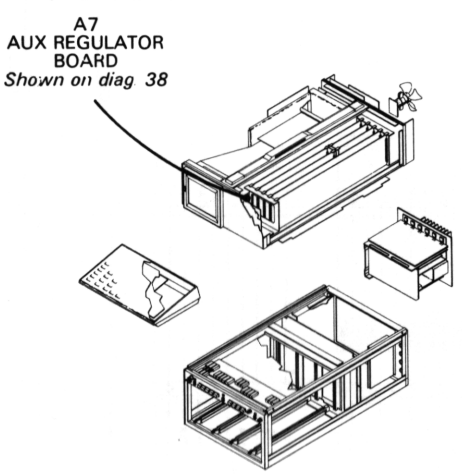

http://manoman.sqhill.com

AUX. REGULATOR DIAGRAM 38

A7 ASSY

CIRCUIT NUMBER	SCHEM LOCATION	BOARD LOCATION
C7	C1	D2
C11	D1	B3
C40	B3	C1
C41	C3	D1
C42	D3	E2
C61	B6	E2
C62	B6	E2
C63	C6	H3
C64	C6	G3
C68	D6	I1
C74	D5	G2
C84	E6	F1
C85	F5	F3
C86	E5	F2
C91	F5	E1
C92	F5	D2
C95	E4	E2
C98	F5	F2
CR3	C1	C1
CR4	C2	C1
CR11	D1	B2
CR51	G3	D3
CR52	G4	D3
CR53	E3	E3
CR66	C6	H2
CR88	F4	F2
CR92	F6	D2
CR95	E4	D2
CR96	E4	E1
L61	B6	E3
L62	B6	F3
L68	E6	H1
L84	E6	E1
P17	H3	A2
P17	H6	A2
P18	H1	A2
P62	A2	D2
P62	A5	D2
P64	H3	C3
P90	H5	A3
Q13	D1	B2
Q14	E1	B1
Q15	E1	A1
Q58	F4	G3
Q66	C6	H2
Q76	C4	G1
Q77	C4	F1
Q79	C5	G2
R2	C1	C2
R3	C1	C2
R4	C1	C2
R5	C2	C2
R7	C1	C2
R8	C1	C2
R13	D2	B2
R15	E2	B2
R21	E2	B2
R22	E2	B2
R23	E2	B2
R26	E1	B2
R27	E2	B2
R29	F2	B3
R31	E1	A2
R32	F1	A2
R51	G3	A2
R52	F3	B3
R53	G4	C3
R54	F4	E3
R55	E3	I3
R57	F4	I3
R58	F4	G3
R64	C6	G2
R71	D4	F1
R72	D5	F2
R74	D5	G2
R75	D5	G2
R76	C4	G2
R79	C5	G2
R81	E5	F2
R82	E5	F2
R85	F5	F3
R86	F5	F2
R87	E5	F2
R88	F4	F2
R95	E4	E2
R96	E4	F1
R98	F4	F2
T66	D6	I2
TP30	G	B2
TP45	F2	A1
TP92	G	F1
U10A	D1	C2
U10B	E2	C2
U40	C3	D1
U86A	F5	E2
U86B	E5	E2
VR55	D4	I3

CHASSIS MOUNTED PARTS

CIRCUIT NUMBER	SCHEM LOCATION	BOARD LOCATION
P64	A3	CHASSIS

http://manoman.sqhill.com

VOLTAGE AND WAVEFORM CONDITIONS

The voltages and waveforms shown were obtained with the 7854 front panel switches set as follows: CRT DISPLAY (SCOPE); TRIGGER SOURCE (VERT MODE); VERTICAL MODE (LEFT); HORIZONTAL MODE (B); READOUT INTENSITY (OFF).

Voltage Conditions. The voltages were taken with a digital multimeter with a 10MΩ input impedance (Tektronix DM501 Digital Multimeter installed in a TM501 Power Module or Tektronix 7D13 Digital Multimeter used with a readout-equipped 7000-Series Oscilloscope.

Waveform Conditions. The waveforms shown below were obtained using a test oscilloscope system with 10MΩ input impedance, at least 60MΩ bandwidth and 10X probe (Tektronix 7603 Oscilloscope, 7B92 Time Base, 7A13 Differential Comparator and P6063A Probe).

1

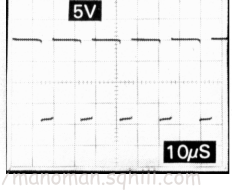

-17.2V

2

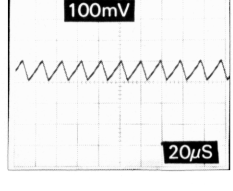

-5.2V

3

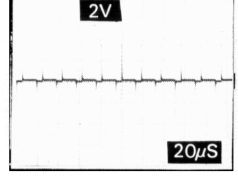

-5.07V

http://manoman.sqhifi.com

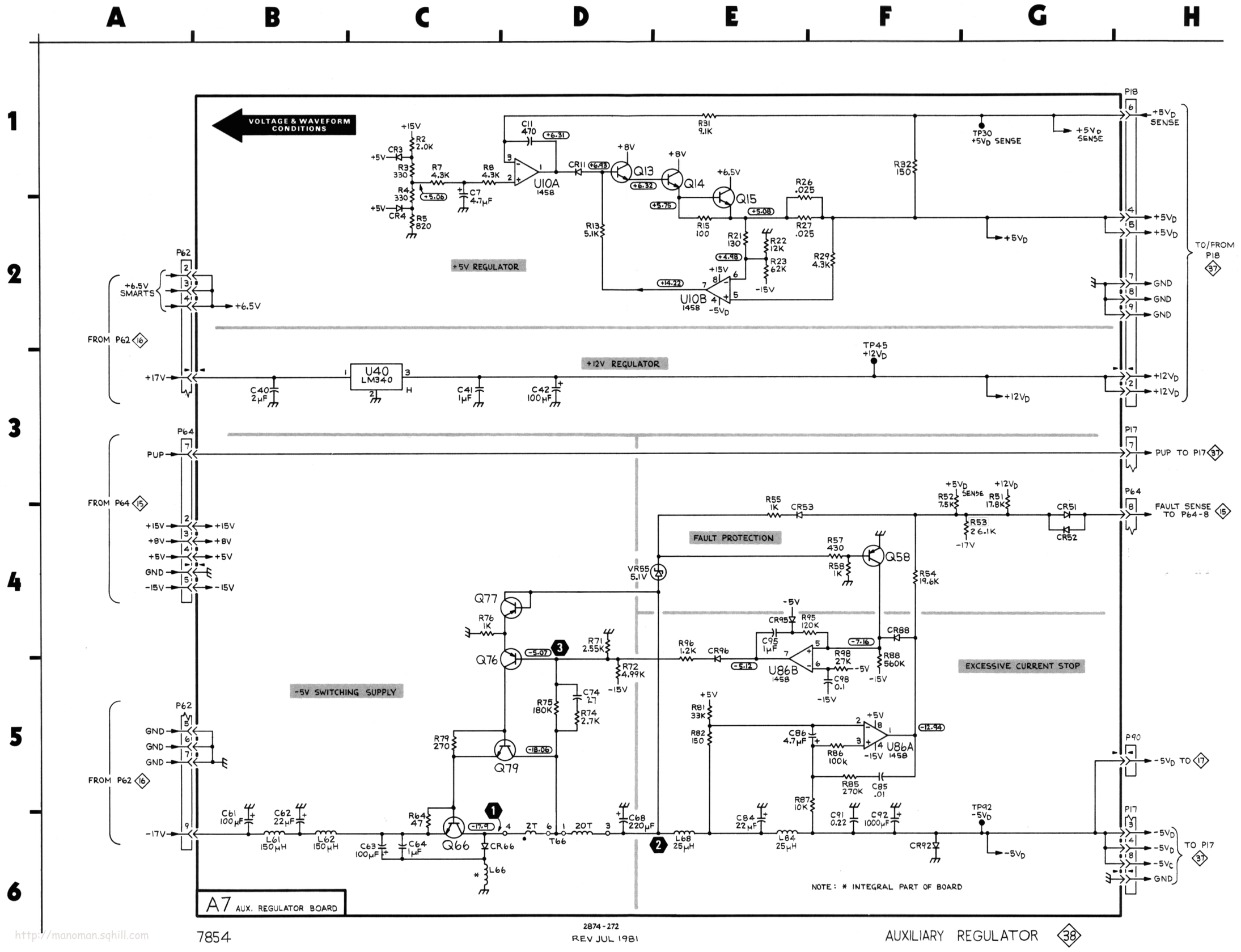
VOLTAGE & WAVEFORM CONDITIONS
+5V REGULATOR
+12V REGULATOR
FAULT PROTECTION
-5V SWITCHING SUPPLY
EXCESSIVE CURRENT STOP
U10A 1458
U10B 1458
U40 LM340
U86B 1458
U86A 1458
Q13
Q14
Q15
Q58
Q76
Q77
Q79
Q66
VR55 5.1V
P18
P62
P64
P17
P90
TP30 +5VD SENSE
TP45 +12VD
TP92 -5VD
+5VD SENSE
TO/FROM P18 37
FROM P62 16
FROM P64 15
PUP TO P17 37
FAULT SENSE TO P64-8 15
-5VD TO 17
TO P17 37
+6.5V SMARTS
NOTE: * INTEGRAL PART OF BOARD
A7 AUX. REGULATOR BOARD
7854
2874-272
REV JUL 1981
AUXILIARY REGULATOR 38

TROUBLESHOOTING CHART INSTRUCTIONS

1. Follow the procedure for Analog Test Card (067-0912-00) installation in Section 3, Maintenance, then proceed with the following instructions.
2. Beginning at the top left block of the chart proceed downward until the 7854 does not perform as indicated.
3. Then follow the dashed lines as the symptom indicates. Each shaded block indicates a circuit which may be the cause of the malfunction. Refer to Section 3, Theory of Operation, for a detailed discussion of the circuit, and Section 7, Diagrams and Circuit Board illustrations, for the circuit schematic.

7854

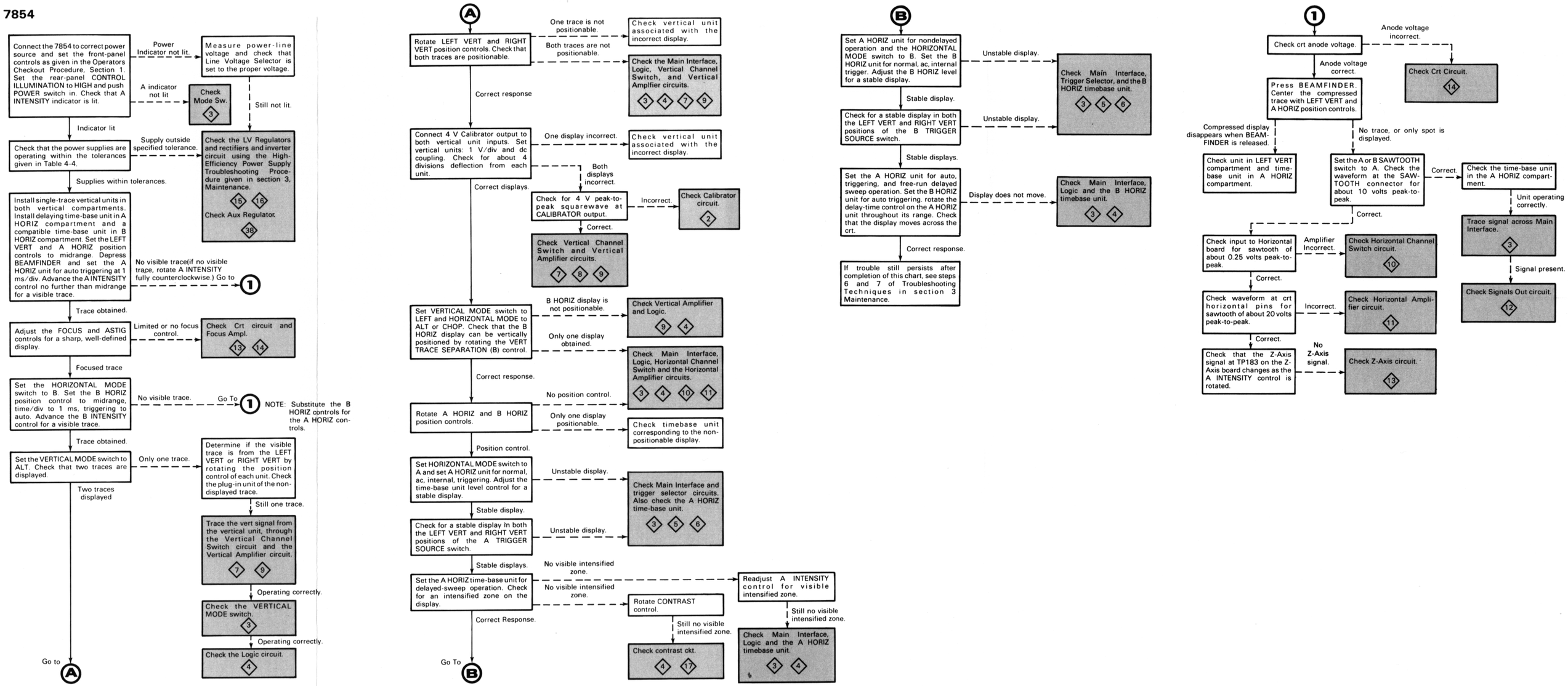

Figure 7-55. 7854 Troubleshooting Chart.

2874-751

http://manoman.sqhill.com

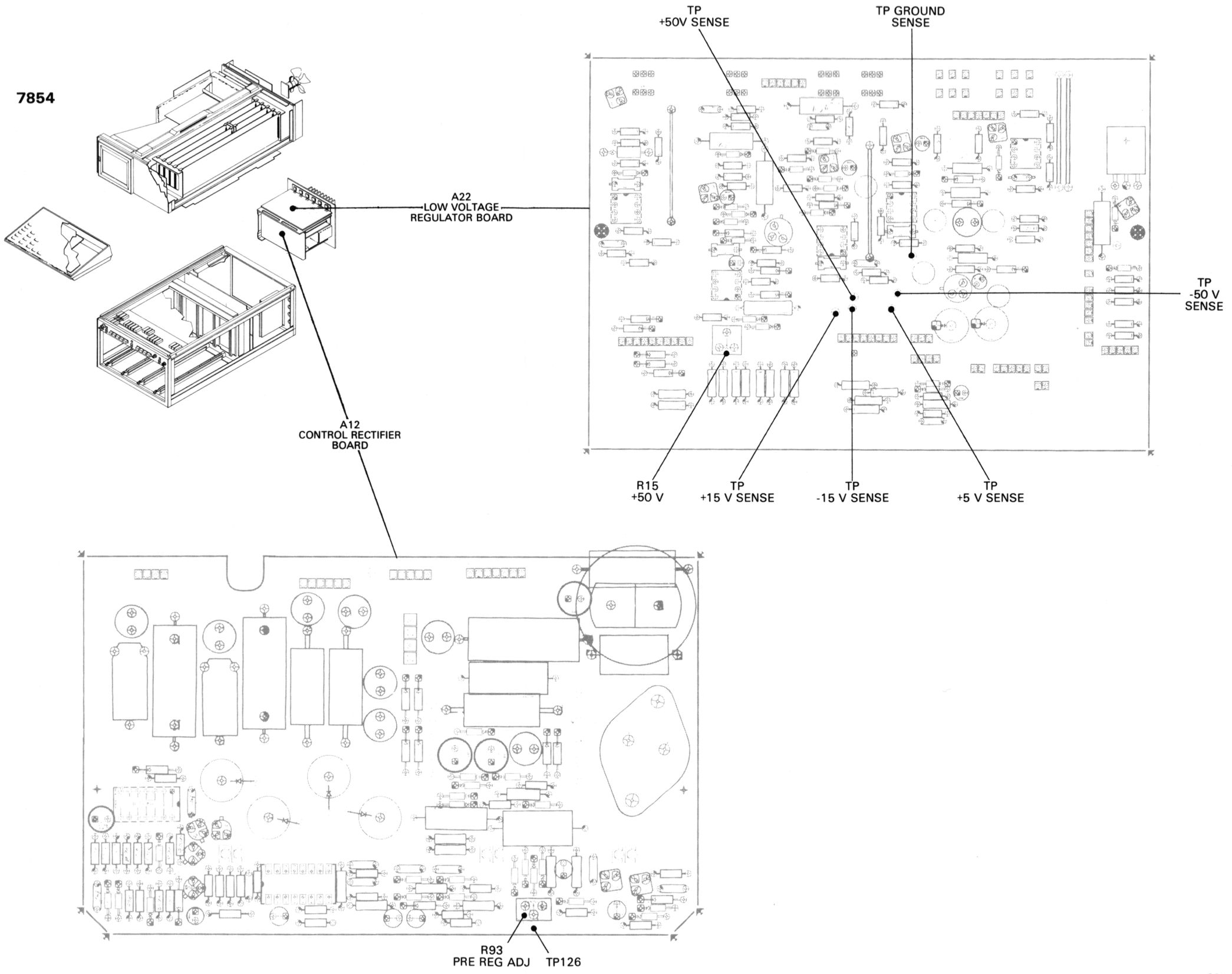

Figure 7-56. Test Point and Adjustment Locations A.

2874-7

http://manoman.sqhill.com

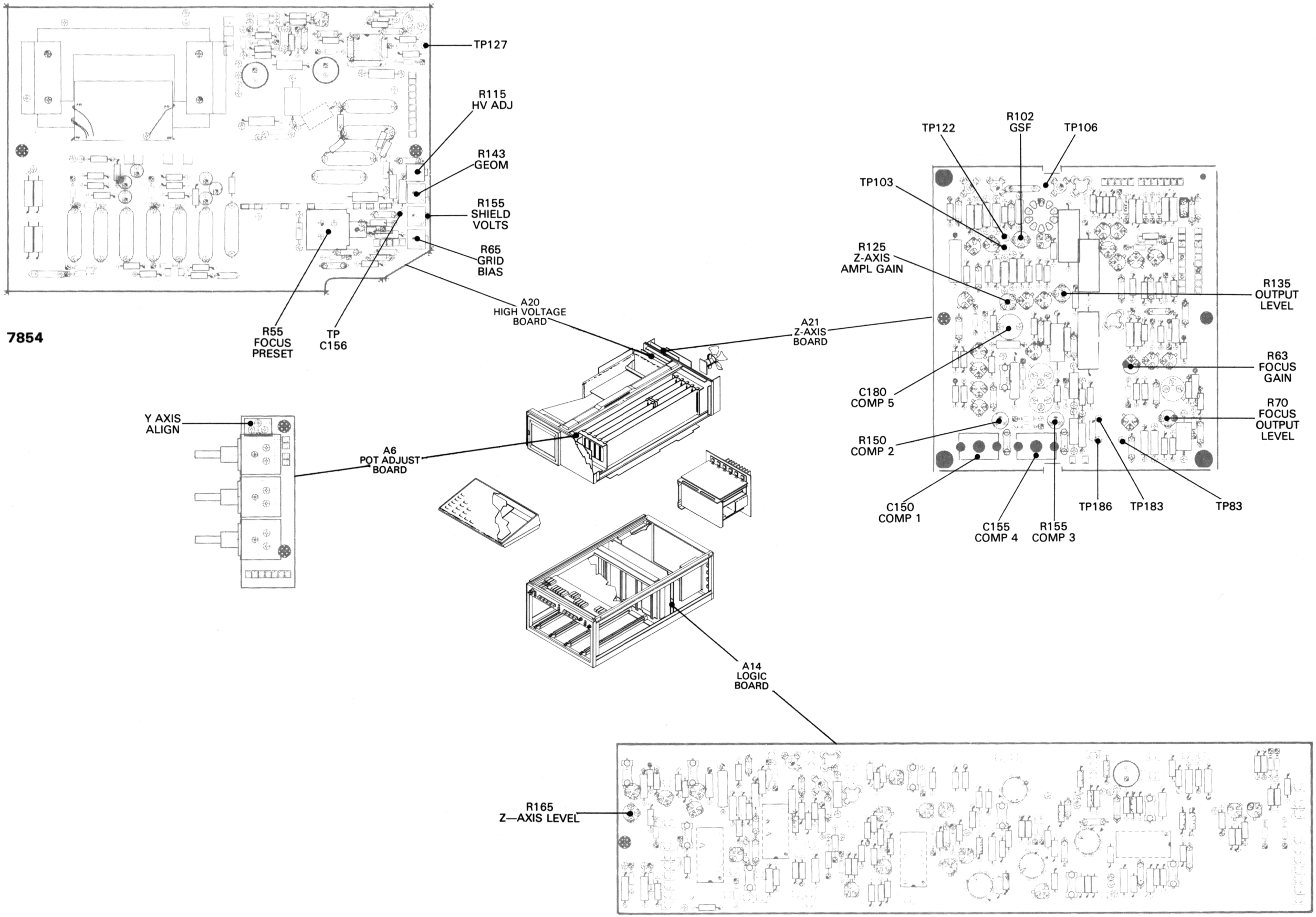

http://manoman.sqhill.com

Figure 7-57. Test Point and Adjustment Locations B.

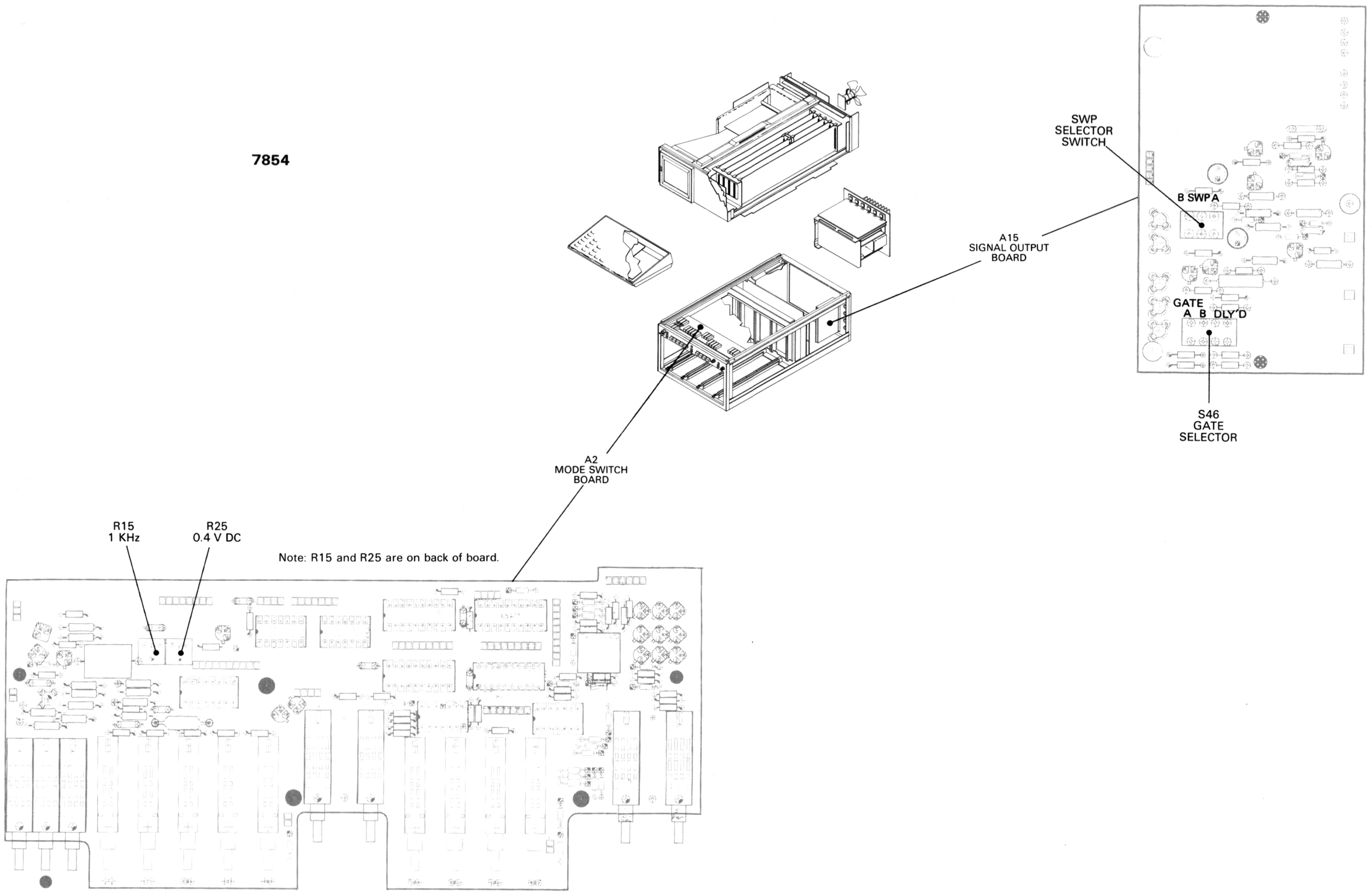

http://manoman.sqhill.com

Figure 7-58. Test Point and Adjustment Locations C.

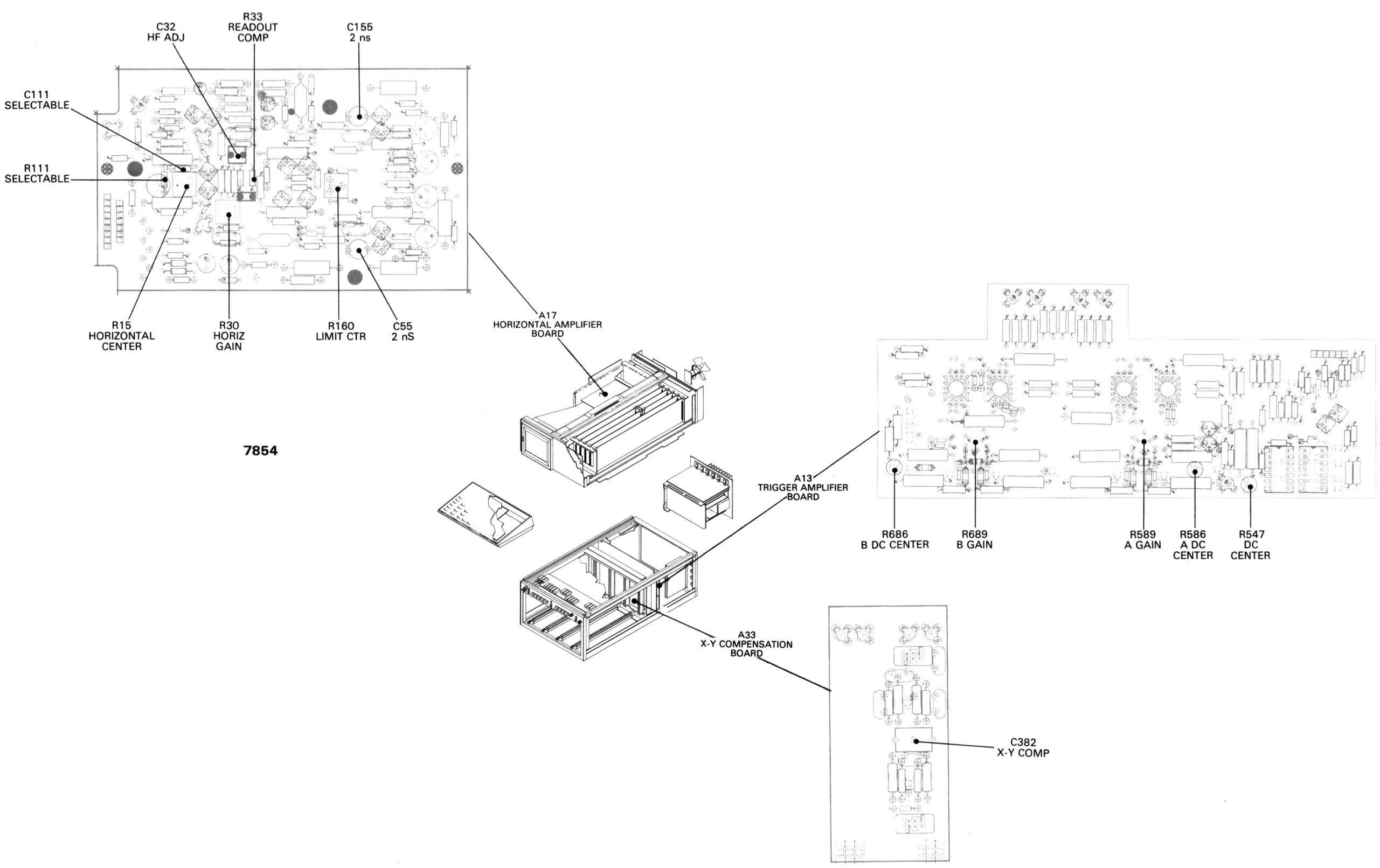

2874-755

Figure 7-59. Test Point and Adjustment Locations D.

http://manoman.sqhill.com

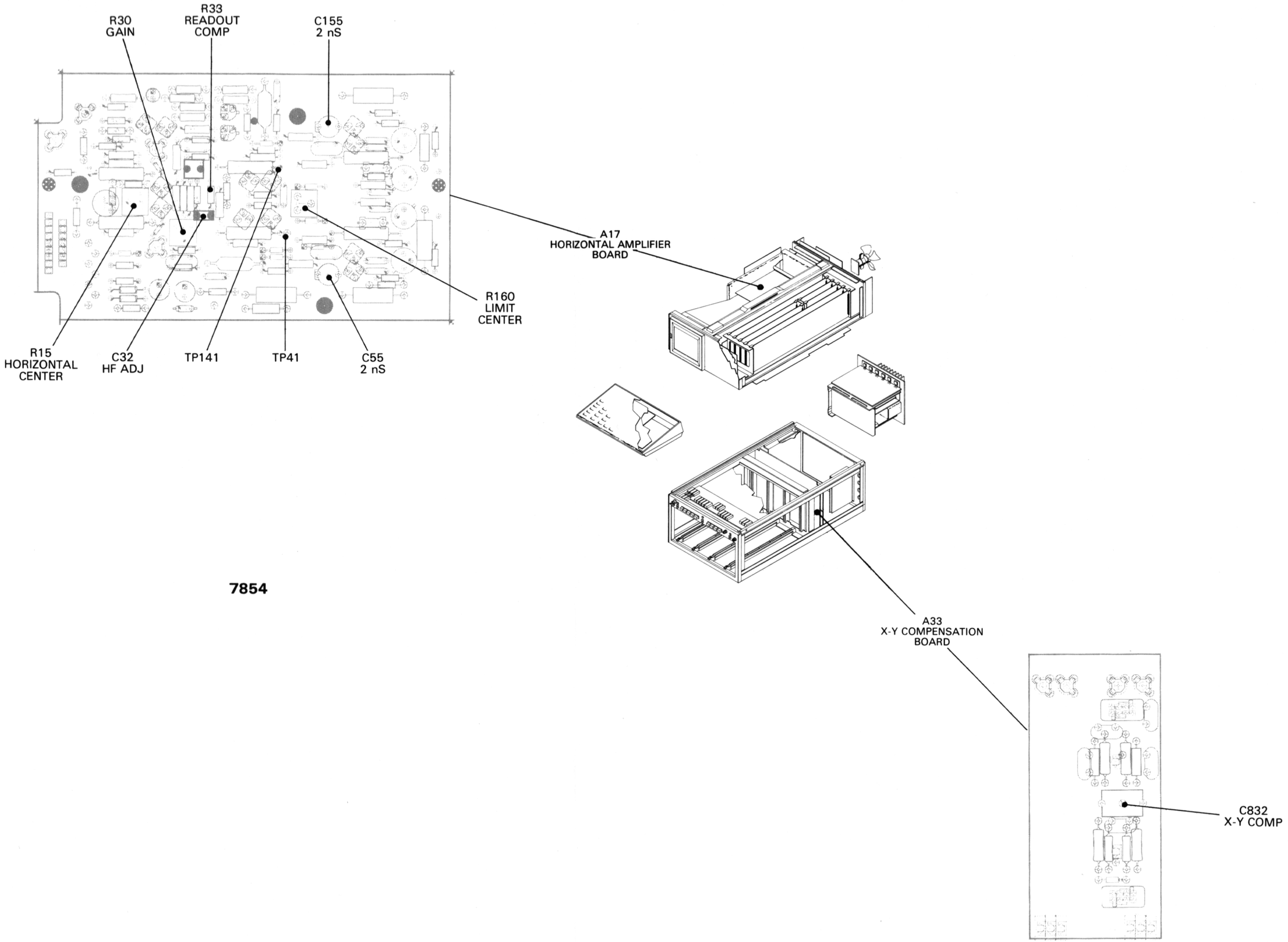

Figure 7-60. Test Point and Adjustment Locations E.

http://manoman.sqhill.com

J91

A8
MOTHER
BOARD

R142
COMP 3

R139
COMP 1

R169
COMP 2

R172
COMP 4

A18
VERTICAL AMPLIFIER
BOARD

R105
VERTICAL
CENTER

C18
COMP 7

R18
COMP 6

L20
COMP 5

R160
VERTICAL
GAIN

A19
VERTICAL CHANNEL
SWITCH BOARD

R125
COMP 25

R133
COMP 24

R137
COMP 23

R142
COMP 22

R145
COMP 21

C150
COMP 20

R120
LEFT
BALANCE

R20
RIGHT
BALANCE

R45
COMP 11

R42
COMP 12

C50
COMP 10

R37
COMP 13

R33
COMP 14

R25
COMP 15

2874-757

http://manoman.sqhill.com

Figure 7-61. Test Point and Adjustment Locations F.

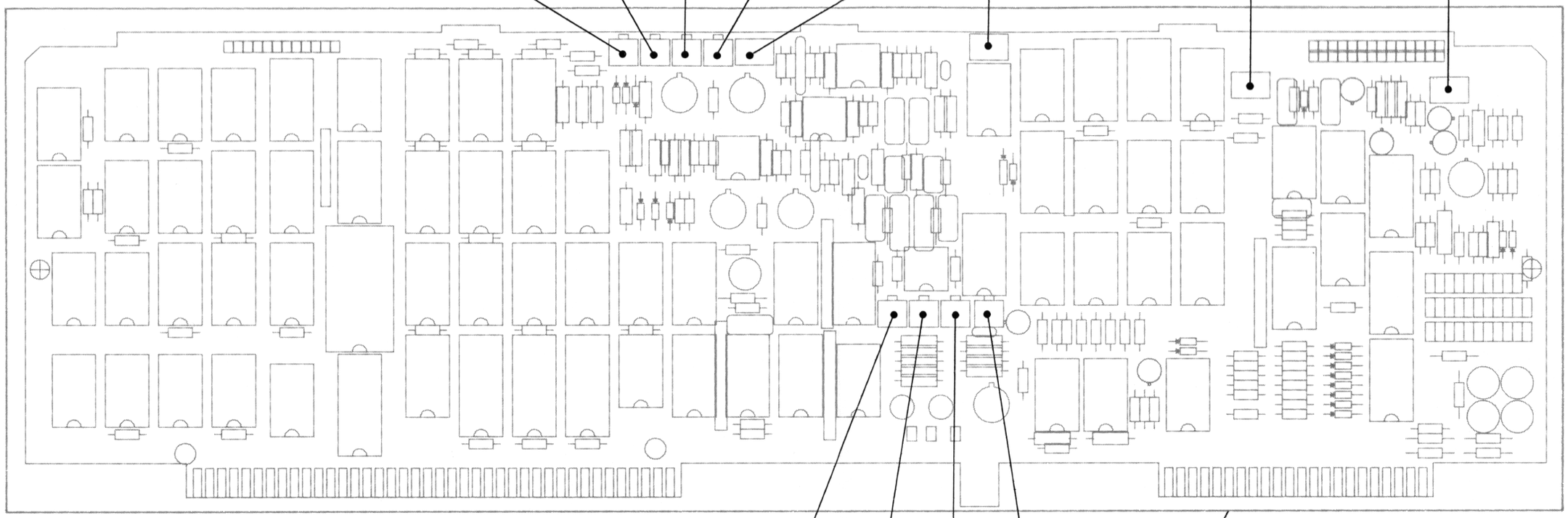

Figure 7-62. Test Point and Adjustment Locations G.

http://manoman.sqhill.com

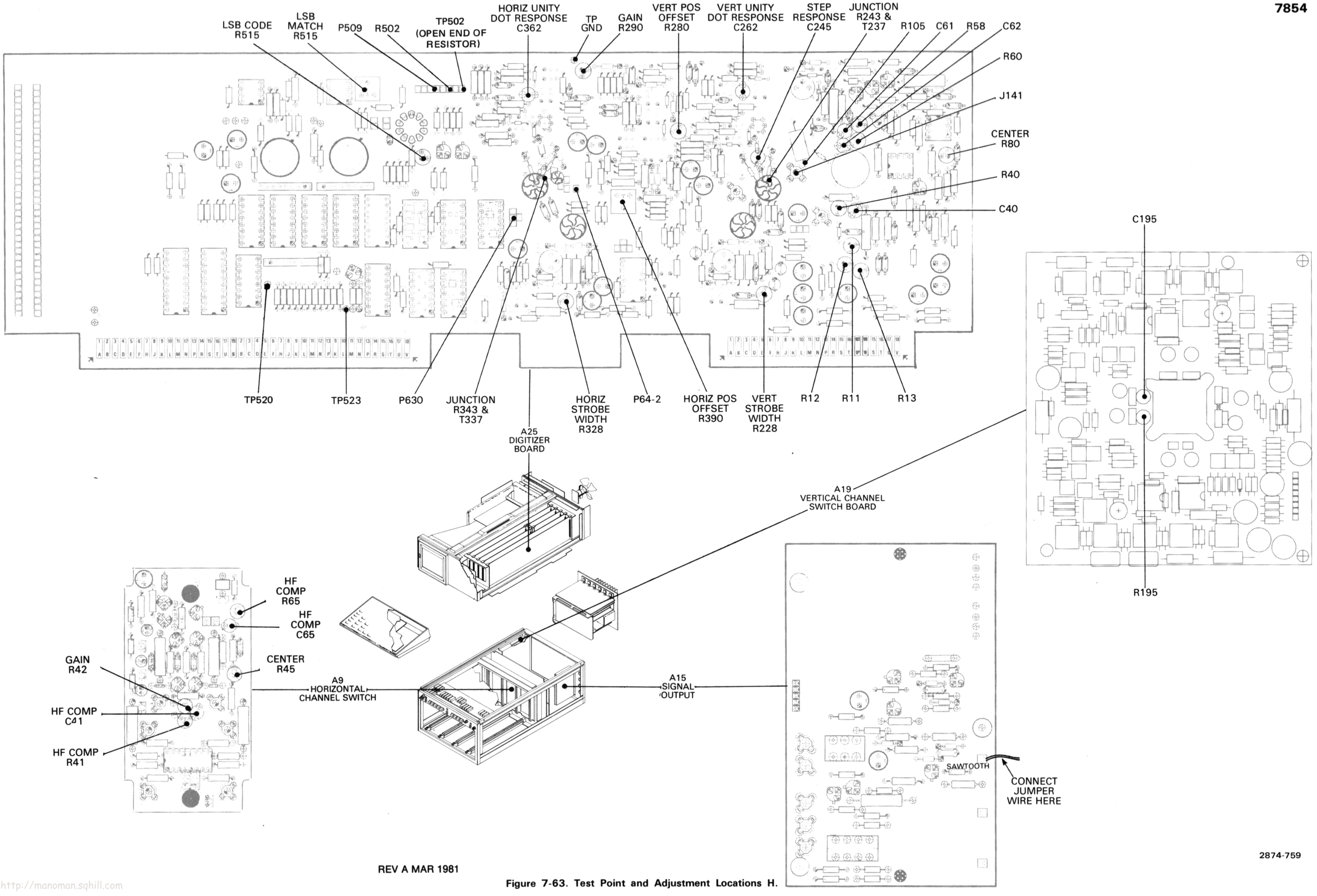

REV A MAR 1981

Figure 7-63. Test Point and Adjustment Locations H.

http://manoman.sqhill.com

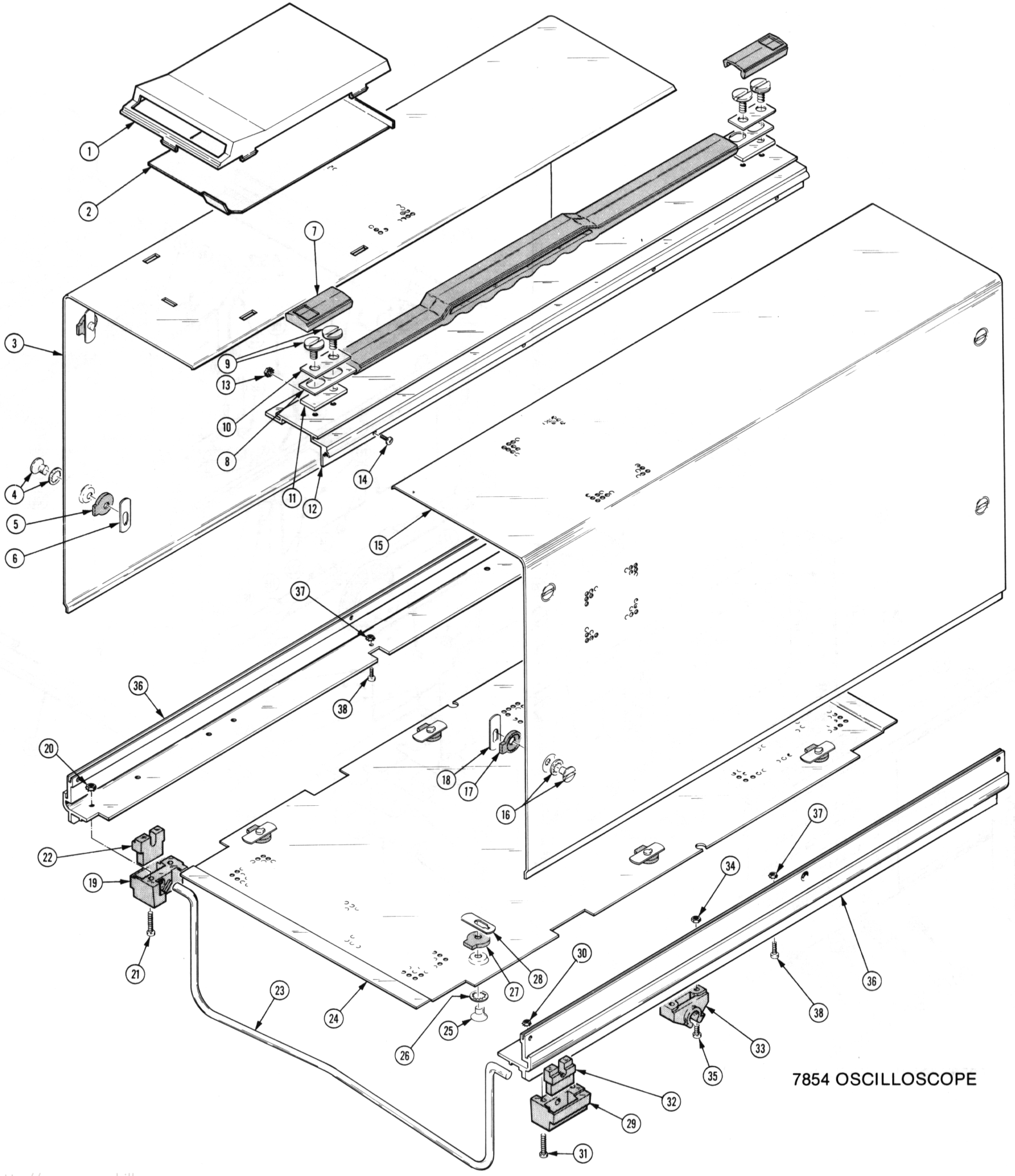

7854 OSCILLOSCOPE

http://manoman.sqhill.com

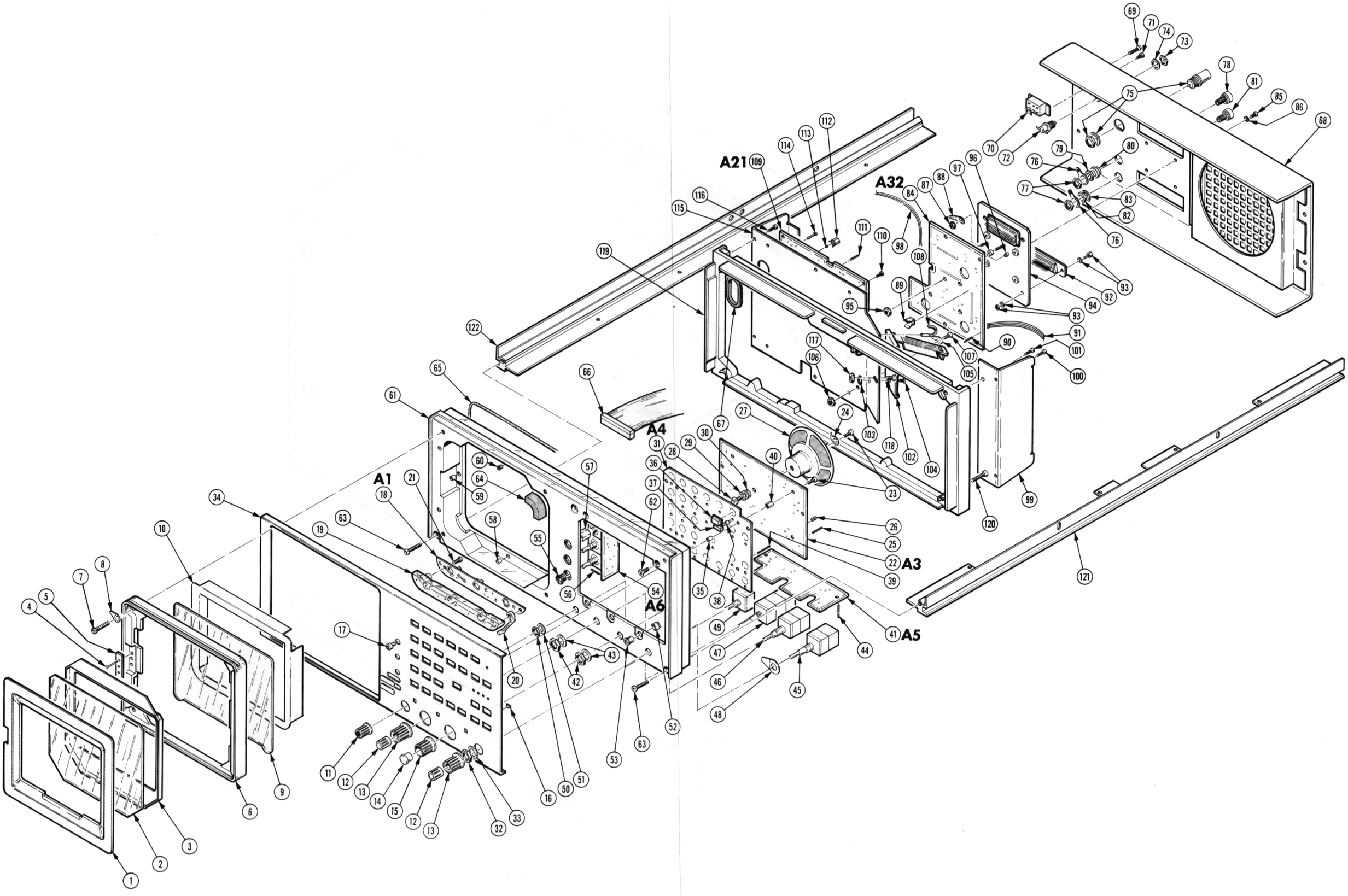

7854 OSCILLOSCOPE

http://manohan.sqmh.com

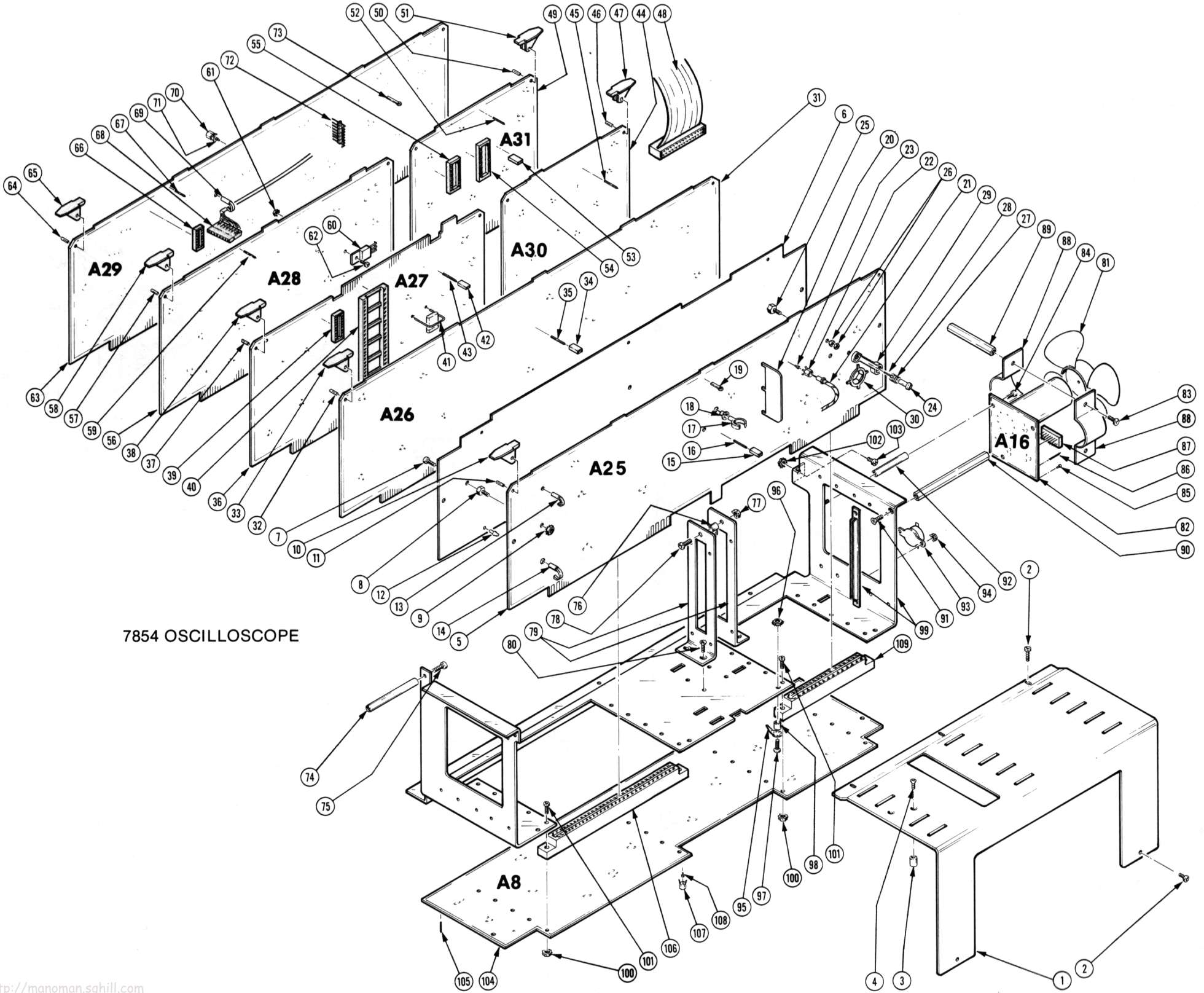

7854 OSCILLOSCOPE

http://manoman.sqhill.com

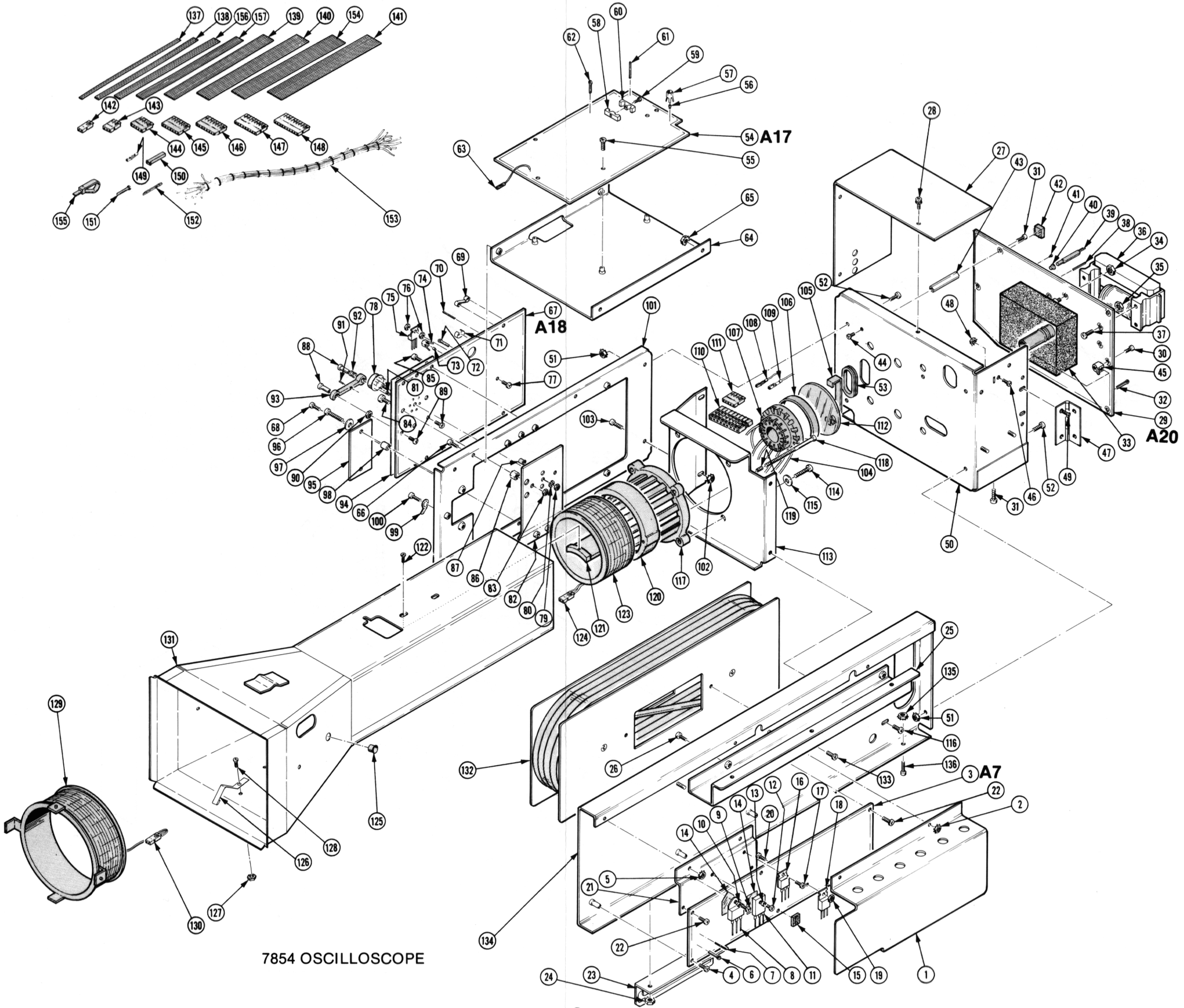

7854 OSCILLOSCOPE

http://manoman.sqhill.com

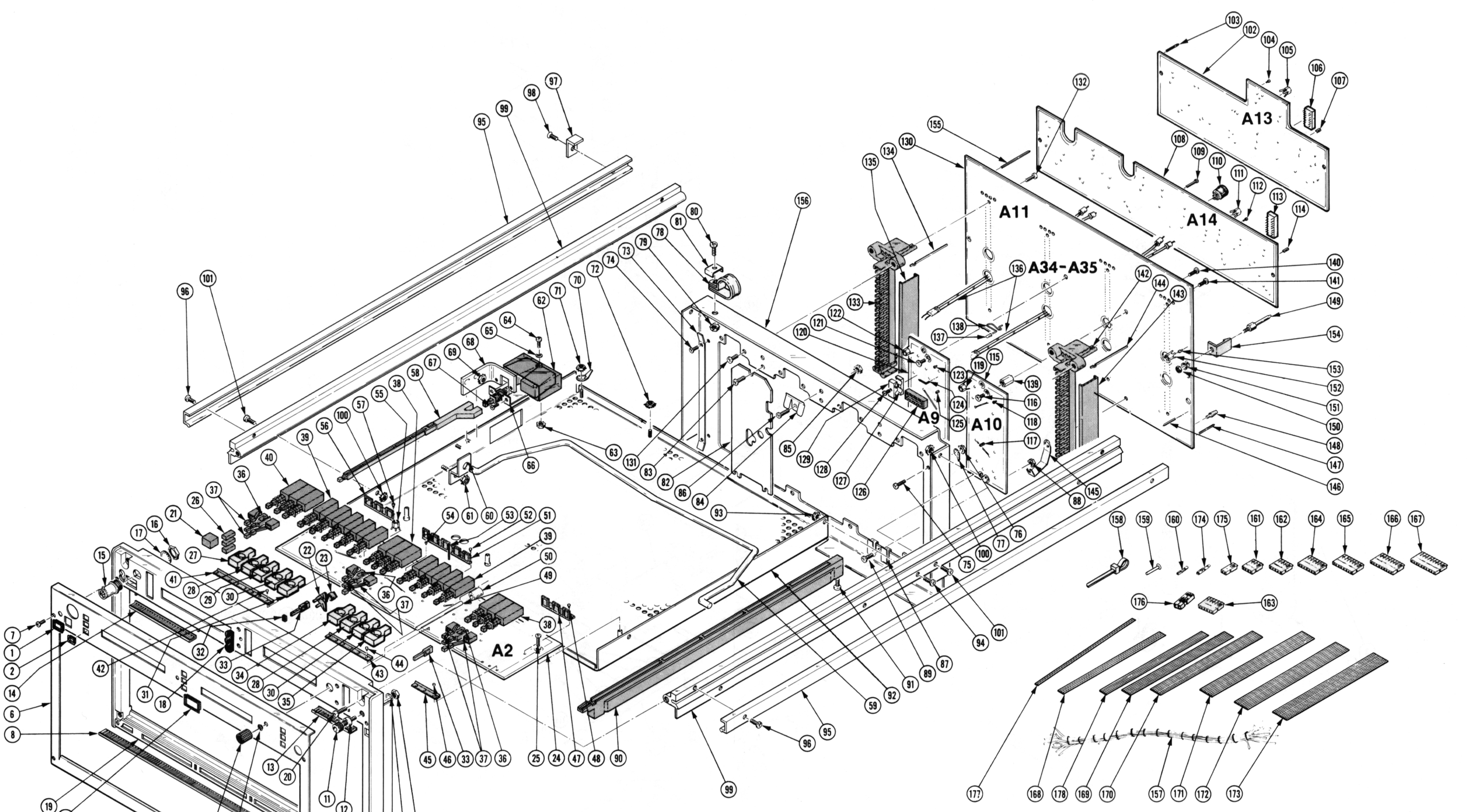

http://manoman.sqhill.com

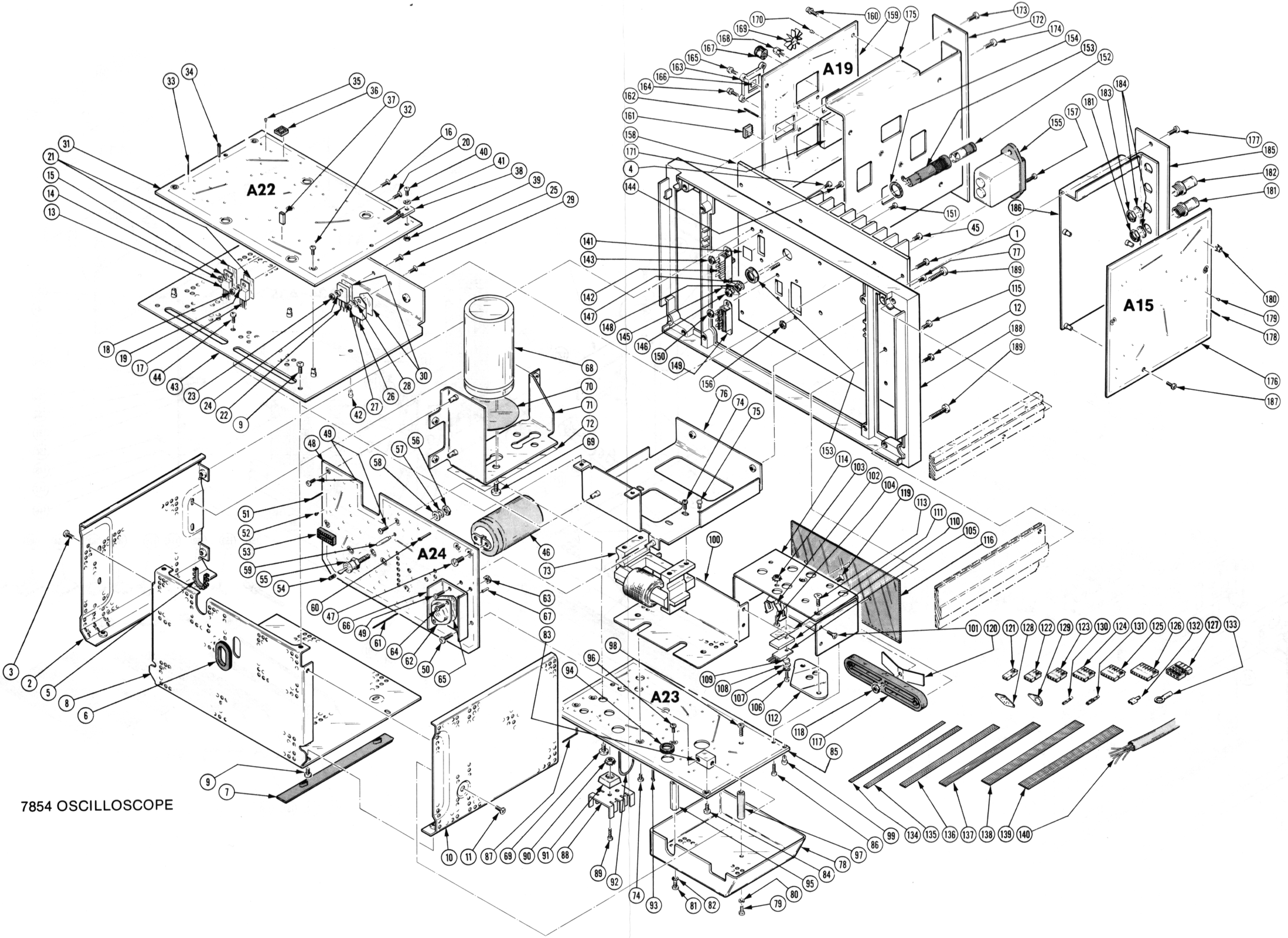

7854 OSCILLOSCOPE

http://manoman.sqhill.com

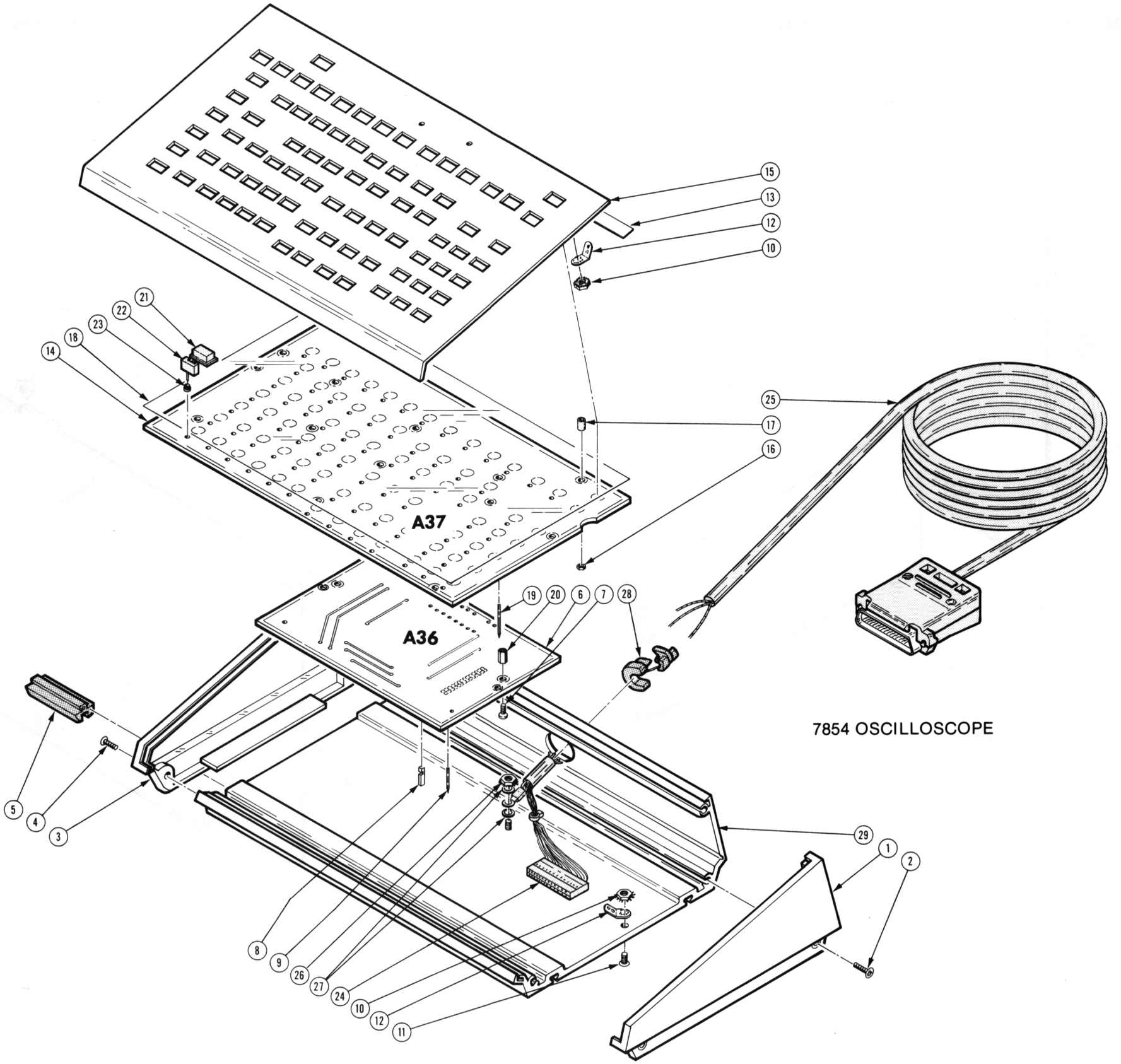

http://manoman.sqhill.com

OPTION OD **OPTION 02** **OPTION 2D**

7854 OSCILLOSCOPE

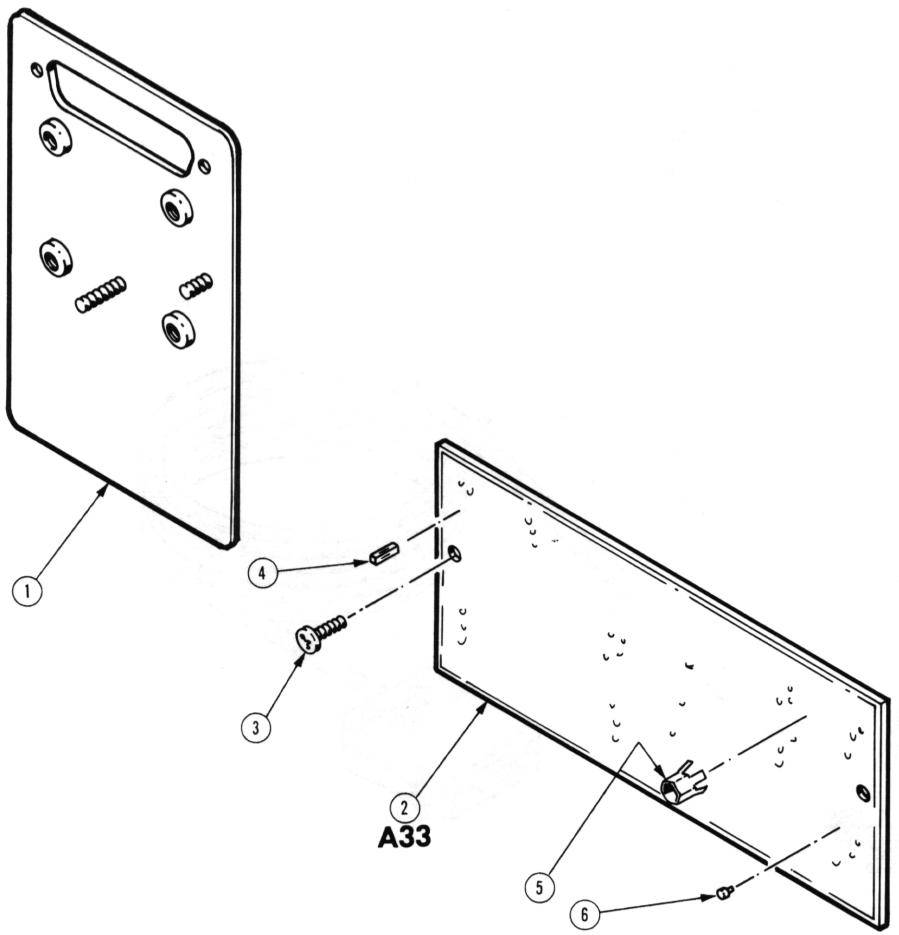

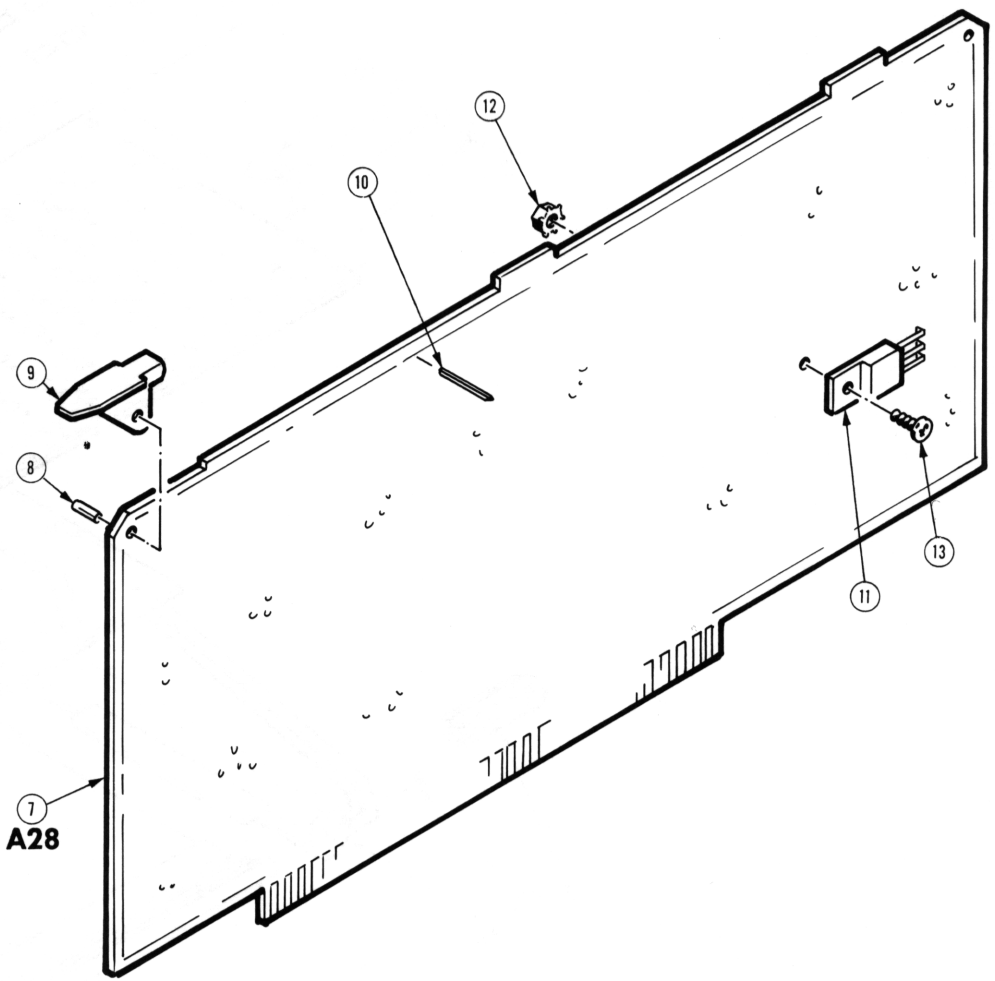

http://manoman.sqhill.com

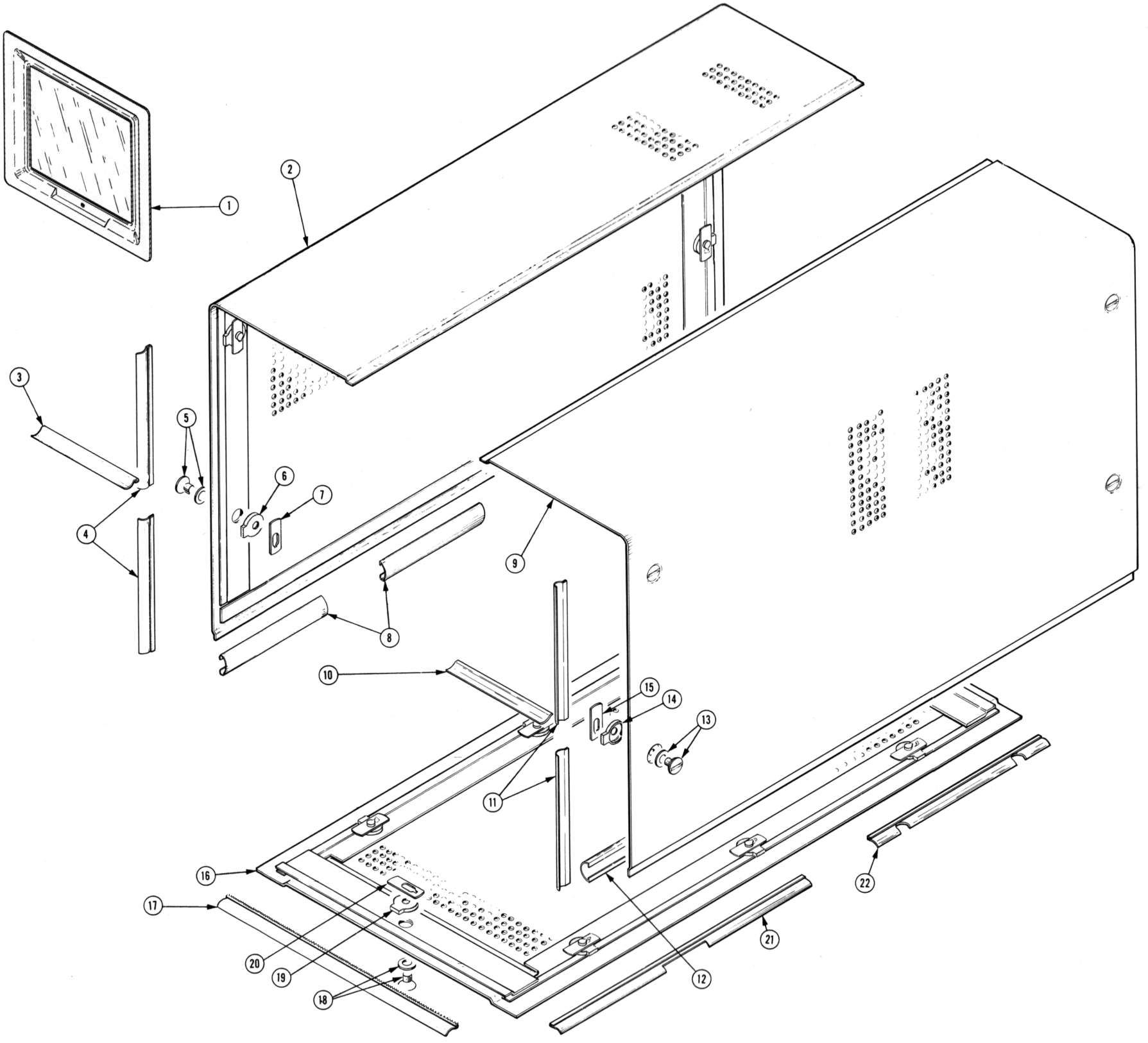

http://manoman.sqhill.com

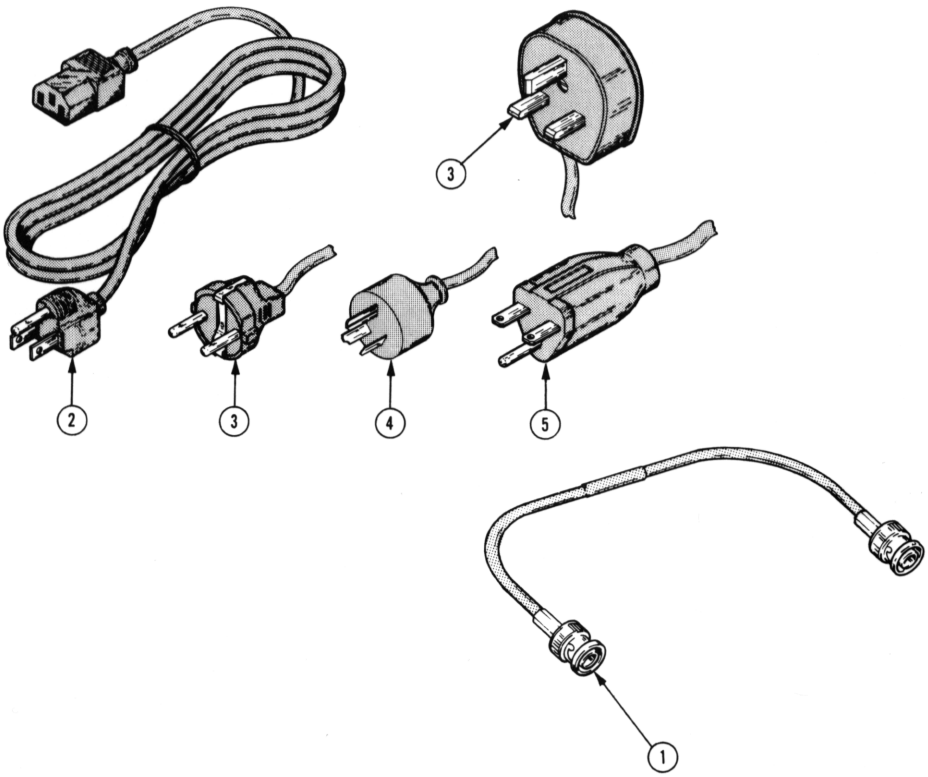

Fig. & Index No.	Tektronix Part No.	Serial/Model No. Eff	Dscont	Qty	1 2 3 4 5	Name & Description	Mfr Code	Mfr Part Number
-1	012-0208-00			1		CABLE,INTCON:10.0 INCH LONG	80009	012-0208-00
-2	161-0066-00			1		CABLE ASSY,PWR,:3,18 AWG,115V,98.0 L	80009	161-0066-00
-3	161-0066-09			1		CABLE ASSY,PWR:3,0.75MM SQ,220V,96.0 L	80126	OBD
	----- -----			-		(OPTION A1 - EUROPEAN)		
-4	161-0066-10			1		CABLE ASSY,PWR:3,0.75MM SQ,240V,96.0 L	80126	OBD
	----- -----			-		(OPTION A2 - UNITED KINGDOM)		
-5	161-0066-11			1		CABLE ASSY,PWR:3,0.75MM,240V,96.0 L	80126	OBD
	----- -----			-		(OPTION A3 - AUSTRALIAN)		
-6	161-0066-12			1		CABLE ASSY,PWR:3,18 AWG,240V,96.0 L	80126	OBD
	----- -----			-		(OPTION A4 - NORTH AMERICAN)		
	070-2873-00			1		MANUAL,TECH:OPERATORS	80009	070-2873-00
	070-2874-00			1		MANUAL,TECH:SERVICE	80009	070-2874-00

http://manoman.sqhill.com

REPLACEABLE MECHANICAL PARTS

PARTS ORDERING INFORMATION

Replacement parts are available from or through your local Tektronix, Inc. Field Office or representative.

Changes to Tektronix instruments are sometimes made to accommodate improved components as they become available, and to give you the benefit of the latest circuit improvements developed in our engineering department. It is therefore important, when ordering parts, to include the following information in your order: Part number, instrument type or number, serial number, and modification number if applicable.

If a part you have ordered has been replaced with a new or improved part, your local Tektronix, Inc. Field Office or representative will contact you concerning any change in part number.

Change information, if any, is located at the rear of this manual.

SPECIAL NOTES AND SYMBOLS

X000	Part first added at this serial number
00X	Part removed after this serial number

FIGURE AND INDEX NUMBERS

Items in this section are referenced by figure and index numbers to the illustrations.

INDENTATION SYSTEM

This mechanical parts list is indented to indicate item relationships. Following is an example of the indentation system used in the description column.

1 2 3 4 5 *Name & Description*

Assembly and/or Component
Attaching parts for Assembly and/or Component
- - - * - - -
Detail Part of Assembly and/or Component
Attaching parts for Detail Part
- - - * - - -
Parts of Detail Part
Attaching parts for Parts of Detail Part
- - - * - - -

Attaching Parts always appear in the same indentation as the item it mounts, while the detail parts are indented to the right. Indented items are part of, and included with, the next higher indentation. The separation symbol - - - * - - - indicates the end of attaching parts.

Attaching parts must be purchased separately, unless otherwise specified.

ITEM NAME

In the Parts List, an Item Name is separated from the description by a colon (:). Because of space limitations, an Item Name may sometimes appear as incomplete. For further Item Name identification, the U.S. Federal Cataloging Handbook H6-1 can be utilized where possible.

ABBREVIATIONS

"	INCH
#	NUMBER SIZE
ACTR	ACTUATOR
ADPTR	ADAPTER
ALIGN	ALIGNMENT
AL	ALUMINUM
ASSEM	ASSEMBLED
ASSY	ASSEMBLY
ATTEN	ATTENUATOR
AWG	AMERICAN WIRE GAGE
BD	BOARD
BRKT	BRACKET
BRS	BRASS
BRZ	BRONZE
BSHG	BUSHING
CAB	CABINET
CAP	CAPACITOR
CER	CERAMIC
CHAS	CHASSIS
CKT	CIRCUIT
COMP	COMPOSITION
CONN	CONNECTOR
COV	COVER
CPLG	COUPLING
CRT	CATHODE RAY TUBE
DEG	DEGREE
DWR	DRAWER
ELCTRN	ELECTRON
ELEC	ELECTRICAL
ELCTLT	ELECTROLYTIC
ELEM	ELEMENT
EPL	ELECTRICAL PARTS LIST
EQPT	EQUIPMENT
EXT	EXTERNAL
FIL	FILLISTER HEAD
FLEX	FLEXIBLE
FLH	FLAT HEAD
FLTR	FILTER
FR	FRAME or FRONT
FSTNR	FASTENER
FT	FOOT
FXD	FIXED
GSKT	GASKET
HDL	HANDLE
HEX	HEXAGON
HEX HD	HEXAGONAL HEAD
HEX SOC	HEXAGONAL SOCKET
HLCPS	HELICAL COMPRESSION
HLEXT	HELICAL EXTENSION
HV	HIGH VOLTAGE
IC	INTEGRATED CIRCUIT
ID	INSIDE DIAMETER
IDENT	IDENTIFICATION
IMPLR	IMPELLER
IN	INCH
INCAND	INCANDESCENT
INSUL	INSULATOR
INTL	INTERNAL
LPHLDR	LAMPHOLDER
MACH	MACHINE
MECH	MECHANICAL
MTG	MOUNTING
NIP	NIPPLE
NON WIRE	NOT WIRE WOUND
OBD	ORDER BY DESCRIPTION
OD	OUTSIDE DIAMETER
OVH	OVAL HEAD
PH BRZ	PHOSPHOR BRONZE
PL	PLAIN or PLATE
PLSTC	PLASTIC
PN	PART NUMBER
PNH	PAN HEAD
PWR	POWER
RCPT	RECEPTACLE
RES	RESISTOR
RGD	RIGID
RLF	RELIEF
RTNR	RETAINER
SCH	SOCKET HEAD
SCOPE	OSCILLOSCOPE
SCR	SCREW
SE	SINGLE END
SECT	SECTION
SEMICOND	SEMICONDUCTOR
SHLD	SHIELD
SHLDR	SHOULDERED
SKT	SOCKET
SL	SLIDE
SLFLKG	SELF-LOCKING
SLVG	SLEEVING
SPR	SPRING
SQ	SQUARE
SST	STAINLESS STEEL
STL	STEEL
SW	SWITCH
T	TUBE
TERM	TERMINAL
THD	THREAD
THK	THICK
TNSN	TENSION
TPG	TAPPING
TRH	TRUSS HEAD
V	VOLTAGE
VAR	VARIABLE
W/	WITH
WSHR	WASHER
XFMR	TRANSFORMER
XSTR	TRANSISTOR

http://manoman.sqhill.com

CROSS INDEX—MFR. CODE NUMBER TO MANUFACTURER

Mfr. Code	Manufacturer	Address	City, State, Zip
S3629	PANEL COMPONENTS CORP.	2015 SECOND ST.	BERKELEY, CA 94170
000AH	STANDARD PRESSED STEEL CO., UNBRAKO DIV.	8535 DICE ROAD	SANTA FE SPRINGS, CA 90670
000CY	NORTHWEST FASTENER SALES, INC.	7923 SW CIRRUS DRIVE	BEAVERTON, OR 97005
000FU	WRIGHT ENGINEERED PLASTICS	10350 OLD REDWOOD HIGHWAY	WINDSOR, CA 95492
000FW	WESTERN SINTERING CO INC.	2620 STEVENS DRIVE	RICHLAND, WA 99352
00779	AMP, INC.	P O BOX 3608	HARRISBURG, PA 17105
01295	TEXAS INSTRUMENTS, INC., SEMICONDUCTOR GROUP	P O BOX 5012, 13500 N CENTRAL EXPRESSWAY	DALLAS, TX 75222
02768	ILLINOIS TOOL WORKS, INC., FASTEX DIV.	195 ALGONQUIN ROAD	DES PLAINES, IL 60016
05820	WAKEFIELD ENGINEERING, INC.	AUDUBON ROAD	WAKEFIELD, MA 01880
06383	PANDUIT CORPORATION	17301 RIDGELAND	TINLEY PARK, IL 60477
06776	ROBINSON NUGENT INC.	800 E. 8TH ST., BOX 470	NEW ALBANY, IN 47150
07700	TECHNICAL WIRE AND PRODUCTS, INC.	129 DERMODY ST.	CRANFORD, NJ 07016
07707	USM CORP., USM FASTENER DIV.	510 RIVER RD.	SHELTON, CT 06484
08261	SPECTRA-STRIP CORP.	7100 LAMPSON AVE.	GARDEN GROVE, CA 92642
09422	PLASTIC STAMPING CORPORATION	2216 W. ARMITAGE AVE.	CHICAGO, IL 60647
09922	BURNDY CORPORATION	RICHARDS AVENUE	NORWALK, CT 06852
11897	PLASTIGLIDE MFG. CORPORATION	P O BOX 867, 1757 STANFORD ST.	SANTA MONICA, CA 90406
12327	FREEWAY CORPORATION	9301 ALLEN DRIVE	CLEVELAND, OH 44125
12360	ALBANY PRODUCTS CO., DIV. OF PNEUMO DYNAMICS CORPORATION	145 WOODWARD AVENUE	SOUTH NORWALK, CT 06586
16428	BELDEN CORP.	P. O. BOX 1331	RICHMOND, IN 47374
22526	BERG ELECTRONICS, INC.	YOUK EXPRESSWAY	NEW CUMBERLAND, PA 17070
24931	SPECIALITY CONNECTOR CO., INC.	2620 ENDRESS PLACE	GREENWOOD, IN 46142
26365	GRIES REPRODUCER CO., DIV. OF COATS AND CLARK, INC.	125 BEECHWOOD AVE.	NEW ROCHELLE, NY 10802
28520	HEYMAN MFG. CO.	147 N. MICHIGAN AVE.	KENILWORTH, NJ 07033
30817	INSTRUMENT SPECIALTIES COMPANY, INC.		LITTLE FALLS, NJ 07424
49671	RCA CORPORATION	30 ROCKEFELLER PLAZA	NEW YORK, NY 10020
52792	THORGREN TOOL AND MOLDING CO., INC.	1100 EVANS AVENUE	VALPARAISO, IN 46383
58474	SUPERIOR ELECTRIC CO.	383 MIDDLE ST.	BRISTOL, CT 06010
59730	THOMAS AND BETTS COMPANY	36 BUTLER ST.	ELIZABETH, NJ 07207
70485	ATLANTIC INDIA RUBBER WORKS, INC.	571 W. POLK ST.	CHICAGO, IL 60607
71126	BRONSON, HOMER D., CO.	250 MAIN ST., P. O. BOX 98	BEACON FALLS, CT 06403
71159	BRISTOL SOCKET SCREW, DIV. OF AMERICAN CHAIN AND CABLE CO., INC.	P O BOX 2244, 40 BRISTOL ST.	WATERBURY, CT 06720
71468	ITT CANNON ELECTRIC	666 E. DYER RD.	SANTA ANA, CA 92702
71785	TRW, CINCH CONNECTORS	1501 MORSE AVENUE	ELK GROVE VILLAGE, IL 60007
73743	FISCHER SPECIAL MFG. CO.	446 MORGAN ST.	CINCINNATI, OH 45206
73803	TEXAS INSTRUMENTS, INC., METALLURGICAL MATERIALS DIV.	34 FOREST STREET	ATTLEBORO, MA 02703
75915	LITTELFUSE, INC.	800 E. NORTHWEST HWY	DES PLAINES, IL 60016
77250	PHEOLL MANUFACTURING CO., DIVISION OF ALLIED PRODUCTS CORP.	5700 W. ROOSEVELT RD.	CHICAGO, IL 60650
78189	ILLINOIS TOOL WORKS, INC. SHAKEPROOF DIVISION	ST. CHARLES ROAD	ELGIN, IL 60120
79807	WROUGHT WASHER MFG. CO.	2100 S. O BAY ST.	MILWAUKEE, WI 53207
80009	TEKTRONIX, INC.	P O BOX 500	BEAVERTON, OR 97077
80033	PRESTOLE EVERLOCK, INC.	P. O. BOX 278,1345 MIAMI ST.	TOLEDO, OH 43605
80126	PACIFIC ELECTRICORD CO.	747 W. REDONDO BEACH,P O BOX 10	GARDENA, CA 90247
83385	CENTRAL SCREW CO.	2530 CRESCENT DR.	BROADVIEW, IL 60153
86044	CALIFORNIA GASKET COMPANY	1601 W. 134 STREET	GARDENA, CA 90249
86928	SEASTROM MFG. COMPANY, INC.	701 SONORA AVENUE	GLENDALE, CA 91201
87308	N. L. INDUSTRIES, INC., SOUTHERN SCREW DIV.	P. O. BOX 1360	STATESVILLE, NC 28677
93907	TEXTRON INC. CAMCAR DIV	600 18TH AVE	ROCKFORD, IL 61101
95987	WECKESSER CO., INC.	4444 WEST IRVING PARK RD.	CHICAGO, IL 60641
98159	RUBBER TECK, INC.	19115 HAMILTON AVE., P O BOX 389	GARDENA, CA 90247
98978	INTERNATIONAL ELECTRONIC RESEARCH CORP.	135 W. MAGNOLIA BLVD.	BURBANK, CA 91502

http://manoman.sqhill.com

Fig. & Index No.	Tektronix Part No.	Serial/Model No. Eff	Dscont	Qty	1 2 3 4 5	Name & Description	Mfr Code	Mfr Part Number
1-1	352-0573-00			1		HLDR,INSTR CARD:ABS	80009	352-0573-00
-2	070-2848-00			1		CARD,INSTR:OPERATORS	80009	070-2848-00
	070-2849-00			1		CARD,INSTR:OPERATORS	80009	070-2849-00
	070-2850-00			1		CARD,INSTR:OPERATORS	80009	070-2850-00
	070-2851-00			1		CARD,INSTR:OPERATORS	80009	070-2851-00
-3	390-0693-00			1		CAB.SIDE,SCOPE:LEFT	80009	390-0693-00
-4	214-0603-02			4		. PIN ASSY,SECRG:	80009	214-0603-02
-5	386-0227-00			4		. STOP,CLP,RIM CL:ACETAL	80009	386-0227-00
-6	386-1151-00			4		. CLAMP,RIM CLENC:SPG STL CD PL	80009	386-1151-00
-7	200-0728-00			2		COV,HANDLE END:	80009	200-0728-00
-8	367-0108-00			1		HANDLE,CARRYING:19.19 L,BLUE VINYL	80009	367-0108-00
						(ATTACHING PARTS)		
-9	212-0628-00			4		SCREW,SHOULDER:10-32 X 0.4 LW/0.3 DIA	93907	OBD
-10	386-1624-00			2		PLATE,HDL RTNG:STAINLESS STEEL	80009	386-1624-00
						- - - * - - -		
-11	386-1283-01			2		PLATE,HDL MTG:FRONT	80009	386-1283-01
-12	426-0819-00			1		FRAME SECT,CAB.:TOP CENTER	80009	426-0819-00
						(ATTACHING PARTS)		
-13	210-0457-00			4		NUT,PL,ASSEM WA:6-32 X 0.312 INCH,STL	83385	OBD
-14	211-0507-00			4		SCREW,MACHINE:6-32 X 0.312 INCH,PNH STL	83385	OBD
						- - - * - - -		
-15	390-0694-00			1		CAB.SIDE,SCOPE:RIGHT	80009	390-0694-00
-16	214-0603-02			4		. PIN ASSY,SECRG:	80009	214-0603-02
-17	386-0227-00			4		. STOP,CLP,RIM CL:ACETAL	80009	386-0227-00
-18	386-1151-00			4		. CLAMP,RIM CLENC:SPG STL CD PL	80009	386-1151-00
-19	348-0073-01			2		SPT PIVOT,FLIP:LEFT FRONT AND RIGHT REAR	80009	348-0073-01
						(ATTACHING PARTS)		
-20	210-0457-00			4		NUT,PL,ASSEM WA:6-32 X 0.312 INCH,STL	83385	OBD
-21	211-0532-00			4		SCREW,MACHINE:6-32 X 0.75 INCH,FILH STL	83385	OBD
						- - - * - - -		
-22	377-0119-00			2		INSERT,FOOT:0.352 X 0.832X 0.934,PU	80009	377-0119-00
-23	348-0193-00			1		FLIP-STAND,CAB.:	80009	348-0193-00
-24	390-0555-00			1		CABINET BOTTOM:	80009	390-0555-00
-25	214-0603-01			4		PIN,SECURING:0.27 INCH LONG	80009	214-0603-01
-26	214-0604-00			4		WASH.,SPG TNSN:0.26 ID X 0.47 INCH OD	80009	214-0604-00
-27	386-0227-00			4		STOP,CLP,RIM CL:ACETAL	80009	386-0227-00
-28	386-1151-00			4		CLAMP,RIM CLENC:SPG STL CD PL	80009	386-1151-00
-29	348-0074-01			2		SPT PIVOT,FLIP:RIGHT FRONT AND LEFT REAR	80009	348-0074-01
						(ATTACHING PARTS)		
-30	210-0457-00			4		NUT,PL,ASSEM WA:6-32 X 0.312 INCH,STL	83385	OBD
-31	211-0532-00			4		SCREW,MACHINE:6-32 X 0.75 INCH,FILH STL	83385	OBD
						- - - * - - -		
-32	377-0119-00			2		INSERT,FOOT:0.352 X 0.832X 0.934,PU	80009	377-0119-00
-33	343-0256-00			2		RTNR BLK,SCOPE:	80009	343-0256-00
						(ATTACHING PARTS)		
-34	210-0457-00			4		NUT,PL,ASSEM WA:6-32 X 0.312 INCH,STL	83385	OBD
-35	213-0192-00			4		SCR,TPG,THD FOR:6-32 X 0.50 INCH,PNH STL	87308	OBD
						- - - * - - -		
-36	426-0814-00			2		FRAME SECT,CAB.:BOTTOM	80009	426-0814-00
						(ATTACHING PARTS)		
37	210-0457-00			2		NUT,PL,ASSEM WA:6-32 X 0.312 INCH,STL	83385	OBD
-38	211-0507-00			2		SCREW,MACHINE:6-32 X 0.312 INCH,PNH STL	83385	OBD
						- - - * - - -		

http://manoman.sghill.com

Fig. & Index No.	Tektronix Part No.	Serial/Model No. Eff	Dscont	Qty	1 2 3 4 5	Name & Description	Mfr Code	Mfr Part Number
2-1	426-0514-00			1		FRAME,MASK:PLASTIC	80009	426-0514-00
-2	378-0625-00			1		FILTER,LT,CRT:BLUE,5.15 X 4.4 X 0.03	80009	378-0625-00
-3	331-0258-03			1		MASK,CRT SCALE:	80009	331-0258-03
-4	131-0765-01			3		TERM,FEED THRU:0.584 L X 0.625 OD BRS GOLD	80009	131-0765-01
-5	204-0380-00			1		BODY,TERMINAL:	80009	204-0380-00
-6	200-0939-01			1		RTNR,CRT SCALE:5.55 X 5.068 X 0.475,AL	80009	200-0939-01
						(ATTACHING PARTS)		
-7	212-0008-00			4		SCREW,MACHINE:8-32 X 0.500 INCH,PNH STL	83385	OBD
						- - - * - - -		
-8	131-1022-00			2		CONTACT,ELEC:CRT MASK	80009	131-1022-00
-9	337-1159-03			1		SHLD,IMPLOSION:4.75 X 3.93 X0.7 THK,PLSTC	80009	337-1159-03
-10	331-0245-00			1		MASK,CRT SCALE:	80009	331-0245-00
-11	366-1189-00			1		KNOB:GRAY	80009	366-1189-00
	213-0246-00			1		. SETSCREW:5-40 X 0.093 ITL BK OXD,HEX SKT	71159	OBD
-12	366-1146-00			2		KNOB:GRAY,IF GAIN	80009	366-1146-00
	213-0246-00			2		. SETSCREW:5-40 X 0.093 ITL BK OXD,HEX SKT	71159	OBD
-13	366-1164-00			2		KNOB:GRAY	80009	366-1164-00
	213-0153-00			4		. SETSCREW:5-40 X 0.125,STL BK OXD,HEX SKT	000CY	OBD
-14	366-1122-00			1		KNOB:GRAY	80009	366-1122-00
	213-0246-00			1		. SETSCREW:5-40 X 0.093 ITL BK OXD,HEX SKT	71159	OBD
-15	366-1120-00			1		KNOB:GRAY,0.600 INCH HIGH	80009	366-1120-00
	213-0153-00			2		. SETSCREW:5-40 X 0.125,STL BK OXD,HEX SKT	000CY	OBD
-16	378-0635-01			1		LENS,LIGHT:WHITE,MARKED A,PLASTIC	80009	378-0635-01
	378-0635-02			1		LENS,LIGHT:WHITE,MARKED B,PLASTIC	80009	378-0635-02
	378-0635-03			1		LENS,LIGHT:WHITE,PLASTIC MARKED S	80009	378-0635-03
-17	358-0301-02			3		BUSHING,SLEEVE:GRAY PLASTIC	80009	358-0301-02
-18	----- -----			1		CKT BOARD ASSY:GRATICULE LAMPS(SEE A1 REPL)		
-19	378-0614-01			1		. REFLECTOR,LIGHT:INT SCALE ILLUMINATION	80009	378-0614-01
-20	344-0179-00			2		. CLIP,REFL RTNG:PLASTIC	80009	344-0179-00
-21	211-0162-00			2		. SCREW,MACHINE:2-56 X 0.188 INCH,SCH,SST	000AH	OBD
-22	----- -----			1		CKT BOARD ASSY:FRONT PANEL(SEE A3 REPL)		
						(ATTACHING PARTS)		
-23	211-0008-00			4		SCREW,MACHINE:4-40 X 0.25 INCH,PNH STL	83385	OBD
-24	210-0201-00			2		TERMINAL,LUG:0.12 ID,LOCKING,BRZ TIN PL	86928	OBD
						- - - * - - -		
	----- -----			-		. CKT BOARD ASSY INCLUDES:		
-25	131-0608-00			27		. TERMINAL,PIN:0.365 L X 0.025 PH BRZ GOLD	22526	47357
-26	136-0263-04			18		. SOCKET,PIN TERM:FOR 0.025 INCH SQUARE PIN	22526	75377-001
-27	----- -----			1		. LOUDSPEAKER,PM:(SEE DS520 REPL)		
						(ATTACHING PARTS)		
-28	212-0001-00			1		. SCREW,MACHINE:8-32 X 0.250 INCH,PNH STL	77250	OBD
-29	210-0864-00			1		. WASHER,FLAT:0.188 ID X 0.05 THK,STL	12327	OBD
-30	210-0008-00			1		. WASHER,LOCK:INTL,0.172 ID X 0.331"OD,STL	78189	1208-00-00-0541C
						- - - * - - -		
-31	----- -----			1		CKT BOARD ASSY:FR PANEL BUTTON(SEE A4 REPL)		
						(ATTACHING PARTS)		
-32	210-0590-00			1		NUT,PLAIN,HEX.:0.375 X 0.438 INCH,STL	73743	2X28269-402
-33	210-0046-00			1		WASHER,LOCK:0.261 ID,INTL,0.018 THK,BRS	78189	1214-05-00-0541C
						- - - * - - -		
	----- -----			-		. CKT BOARD ASSY INCLUDES:		
-34	333-2479-00			1		. PANEL,FRONT:UPPER	80009	333-2479-00
-35	210-1304-00			4		. SPACER,SLEEVE:0.112 ID X 0.18 OD X 0.2 THK	80009	210-1304-00
-36	366-1770-00			8		. PUSH BUTTON:GY,0.225 X 0.4 X 0.17	000FU	OBD
	366-1783-00			1		. PUSH BUTTON:0.4 X 0.225 X 0.21,BLUE	000FU	OBD
	366-1784-00			1		. PUSH BUTTON:GRAY,0.4 X 0.225 X 0.21	000FU	OBD
	366-1785-00			19		. PUSH BUTTON:TV GRAY,1 SILVER GRAY LEGEND	000FU	OBD
-37	352-0553-00			29		. HOLDER,PB:NATURAL PLASTIC	22526	
-38	105-0814-00			29		. ACTUATOR,SWITCH:	80009	105-0814-00
-39	131-0590-00			17		. CONTACT,ELEC:0.71 INCH LONG	22526	47351
-40	129-0285-00			4		POST,ELEC-MECH:0.281 L X 0.188 HEX BRS	80009	129-0285-00
-41	----- -----			1		CKT BOARD ASSY:INTENSITY CONTROL(SEE A5 REPL)		
						(ATTACHING PARTS)		
-42	210-0590-00			2		NUT,PLAIN,HEX.:0.375 X 0.438 INCH,STL	73743	2X28269-402
-43	210-0046-00			2		WASHER,LOCK:0.261 ID,INTL,0.018 THK,BRS	78189	1214-05-00-0541C
						- - - * - - -		

http://manoman.sqhill.com

Fig. & Index No.	Tektronix Part No.	Serial/Model No. Eff	Dscont	Qty	1 2 3 4 5	Name & Description	Mfr Code	Mfr Part Number
2-	----- -----			-		. CKT BOARD ASSY INCLUDES:		
-44	131-0608-00			28		. TERMINAL,PIN:0.365 L X 0.025 PH BRZ GOLD	22526	47357
-45	----- -----			1		. RESISTOR,VAR:(SEE R50,R70 REPL)		
-46	----- -----			1		. RESISTOR,VAR:(SEE R75,S69 REPL)		
-47	----- -----			1		. RESISTOR,VAR:(SEE S60,R60,R65 REPL)		
-48	210-0255-00			1		. TERMINAL,LUG:0.391" ID INT TOOTH	80009	210-0255-00
-49	----- -----			1		RESISTOR,VAR:(SEE R55 REPL)		
						(ATTACHING PARTS)		
-50	210-0583-00			1		NUT,PLAIN,HEX.:0.25-32 X 0.312 INCH,BRS	73743	2X20317-402
-51	210-0940-00			1		WASHER,FLAT:0.25 ID X 0.375 INCH OD,STL	79807	OBD
						- - - * - - -		
-52	200-0935-00			3		BASE,LAMPHOLDER:0.29 OD X 0.19 CASE	80009	200-0935-00
-53	352-0157-00			3		LAMPHOLDER:WHITE PLASTIC	80009	352-0157-00
-54	----- -----			1		CKT BOARD ASSY:POT ADJUST(SEE A6 REPL)		
						(ATTACHING PARTS)		
-55	358-0409-00			3		BSHG,MACH.THD:0.25-32 X 0.159 ID X 0.24	80009	358-0409-00
						- - - * - - -		
	----- -----			-		. CKT BOARD ASSY INCLUDES:		
-56	131-0608-00			11		. TERMINAL,PIN:0.365 L X 0.025 PH BRZ GOLD	22526	47357
-57	210-0471-00			3		. NUT,SLEEVE:HEX.,0.312 X 0.594 INCH LONG	80009	210-0471-00
-58	348-0031-00			1		GROMMET,PLASTIC:0.156 INCH DIA	80009	348-0031-00
-59	343-0055-00			1		CLAMP,LOOP:1.5 ID,SST	80009	343-0055-00
-60	386-1517-00			4		SUPPORT,CRT:FRONT	80009	386-1517-00
-61	426-0808-06			1		FRAME PNL,CAB:UPPER FRONT	80009	426-0808-06
						(ATTACHING PARTS)		
-62	211-0538-00			2		SCREW,MACHINE:6-32 X 0.312"100 DEG,FLH STL	83385	OBD
-63	213-0270-00			3		SCR,TPG,THD FOR:10-32 X 0.75 INCH FILH STL	83385	OBD
						- - - * - - -		
-64	134-0119-00			1		PLUG,PLASTIC:0.17 OD X 0.144 INCH LONG	80009	134-0119-00
-65	348-0216-00			1		SHLD GSKT ELEK:MESH TYPE,RING,5.25 ID	07700	30-90042
-66	175-2263-00			1		CA ASSY,SP,ELEC:40.0 INCH LONG	80009	175-2263-00
-67	348-0442-00			2		GROMMET,PLASTIC:BLACK,ROUND,0.375" ID	28520	SB-500-6
-68	333-2480-00			1		PANEL,REAR:UPPER	80009	333-2480-00
						(ATTACHING PARTS)		
-69	211-0504-00			4		SCREW,MACHINE:6-32 X 0.25 INCH,PNH STL	83385	OBD
						- - - * - - -		
-70	----- -----			1		SWITCH,SLIDE:(SEE S16 REPL)		
						(ATTACHING PARTS)		
-71	213-0138-00			2		SCR,TPG,TF:4-24 X 0.188 INCH,PNH STL	83385	OBD
						- - - * - - -		
-72	----- -----			1		SWITCH,PUSH:(SEE S15 REPL)		
						(ATTACHING PARTS)		
-73	210-0583-00			1		NUT,PLAIN,HEX.:0.25-32 X 0.312 INCH,BRS	73743	2X20317-402
-74	210-0940-00			1		WASHER,FLAT:0.25 ID X 0.375 INCH OD,STL	79807	OBD
						- - - * - - -		
-75	131-0955-01			1		CONN,RCPT,ELEC:BNC,FEMALE,MODIFIED	80009	131-0955-01
-76	210-0223-00			2		TERMINAL,LUG:0.25 INCH DIA,SE	86928	A313-136
						(ATTACHING PARTS)		
-77	210-0583-00			2		NUT,PLAIN,HEX.:0.25-32 X 0.312 INCH,BRS	73743	2X20317-402
						- - - * - - -		
-78	136-0139-00			1		JACK,TIP:BANANA STYLE,W/RED CAP	80009	136-0139-00
						(ATTACHING PARTS)		
-79	210-0583-00			1		NUT,PLAIN,HEX.:0.25-32 X 0.312 INCH,BRS	73743	2X20317-402
						- - - * - - -		
-80	358-0181-01			1		INSULATOR,BSHG:RED	58474	BB10166G2
-81	136-0138-00			1		JACK,TIP:BANANA,BLACK	80009	136-0138-00
						(ATTACHING PARTS)		
-82	210-0583-00			1		NUT,PLAIN,HEX.:0.25-32 X 0.312 INCH,BRS	73743	2X20317-402
-83	210-0046-00			1		WASHER,LOCK:0.261 ID,INTL,0.018 THK,BRS	78189	1214-05-00-0541C
						- - - * - - -		
-84	----- -----			1		CKT BOARD ASSY:REAR PANEL CONN(SEE A32 REPL)		
						(ATTACHING PARTS)		
-85	211-0008-00			4		SCREW,MACHINE:4-40 X 0.25 INCH,PNH STL	83385	OBD
-86	210-0054-00			4		WASHER,LOCK:SPLIT,0.118 ID X 0.212"OD STL	83385	OBD
-87	210-0586-00			1		NUT,PL,ASSEM WA:4-40 X 0.25,STL CD PL	83385	OBD
-88	210-0201-00			1		TERMINAL,LUG:0.12 ID,LOCKING,BRZ TIN PL	86928	OBD
						- - - * - - -		

http://manoman.sqhill.com

Fig. & Index No.	Tektronix Part No.	Serial/Model No. Eff	Dscont	Qty	1 2 3 4 5	Name & Description	Mfr Code	Mfr Part Number
2-	----- -----			-		. CKT BOARD ASSY INCLUDES:		
-89	344-0326-00			2		. CLIP,ELECTRICAL:FUSE,BRASS	75915	102071
-90	131-0608-00			69		. TERMINAL,PIN:0.365 L X 0.025 PH BRZ GOLD	22526	47357
-91	175-2719-00			1		. CA ASSY,SP,ELEC:11.0 INCH LONG	80009	175-2719-00
-92	131-1437-00			1		. CONN,RCPT,ELEC:25 FEMALE CONTACT	71468	DB25S-F179
						(ATTACHING PARTS)		
-93	131-0890-00			2		. LOCK,CONNECTOR:4-40 X 0.312 L	71468	D 20418-2
						- - - * - - -		
-94	386-4233-00			1		. PLATE,CONN MTG:	80009	386-4233-00
						(ATTACHING PARTS)		
-95	210-0586-00			1		. NUT,PL,ASSEM WA:4-40 X 0.25,STL CD PL	83385	OBD
						- - - * - - -		
-96	386-1635-00			1		. SUPPORT,CKT BD:CHASSIS MT,ACETAL	80009	386-1635-00
-97	361-0122-00			1		. SPACER,SLEEVE:0.125 L X 0.12 ID BRS	80009	361-0122-00
-98	175-2718-00			1		. CA ASSY,SP,ELEC:3.5 INCH LONG	80009	175-2718-00
-99	386-4065-00			1		SPRT,REAR PANEL:LEFT	80009	386-4065-00
						(ATTACHING PARTS)		
-100	211-0232-00			2		SCREW,MACHINE:4-40 X 0.25 INCH,FIL STL	83385	OBD
-101	211-0504-00			1		SCREW,MACHINE:6-32 X 0.25 INCH,PNH STL	83385	OBD
						- - - * - - -		
-102	343-0858-00			1		CLAMP,CABLE:PLASTIC	06383	FCM2-S6-D14
						(ATTACHING PARTS)		
-103	210-0457-00			2		NUT,PL,ASSEM WA:6-32 X 0.312 INCH,STL	83385	OBD
-104	211-0541-00			2		SCREW,MACHINE:6-32 X 0.25"100 DEG,FLH STL	83385	OBD
						- - - * - - -		
-105	210-0202-00			1		TERMINAL,LUG:0.146 ID,LOCKING,BRZ TINNED	78189	2104-06-00-2520N
						(ATTACHING PARTS)		
-106	210-0457-00			1		NUT,PL,ASSEM WA:6-32 X 0.312 INCH,STL	83385	OBD
-107	211-0504-00			1		SCREW,MACHINE:6-32 X 0.25 INCH,PNH STL	83385	OBD
						- - - * - - -		
-108	343-0089-00			1		CLAMP,LOOP:LARGE	80009	343-0089-00
-109	----- -----			1		CKT BOARD ASSY:Z-AXIS(SEE A21 REPL)		
						(ATTACHING PARTS)		
-110	211-0008-00			4		SCREW,MACHINE:4-40 X 0.25 INCH,PNH STL	83385	OBD
						- - - * - - -		
	----- -----			-		. CKT BOARD ASSY INCLUDES:		
-111	131-0608-00			34		. TERMINAL,PIN:0.365 L X 0.025 PH BRZ GOLD	22526	47357
-112	131-1003-00			5		. CONN,RCPT,ELEC:CKT BD MT,3 PRONG	80009	131-1003-00
-113	136-0252-07			15		. SOCKET,PIN CONN:W/O DIMPLE	22526	75060-012
-114	214-0579-00			8		. TERM,TEST POINT:BRS CD PL	80009	214-0579-00
-115	441-1464-00			1		CHASSIS,SCOPE:Z AXIS	80009	441-1464-00
						(ATTACHING PARTS)		
-116	211-0232-00			4		SCREW,MACHINE:4-40 X 0.25 INCH,FIL STL	83385	OBD
-117	210-0586-00			2		NUT,PL,ASSEM WA:4-40 X 0.25,STL CD PL	83385	OBD
-118	211-0008-00			2		SCREW,MACHINE:4-40 X 0.25 INCH,PNH STL	83385	OBD
						- - - * - - -		
-119	426-0809-05			1		FRAME PNL,CAB.:UPPER REAR	80009	426-0809-05
						(ATTACHING PARTS)		
-120	213-0270-00			3		SCR,TPG,THD FOR:10-32 X 0.75 INCH FILH STL	83385	OBD
						- - - * - - -		
-121	426-1584-00			1		FRAME SECT,CAB:BOTTOM RIGHT	80009	426-1584-00
-122	426-1583-00			1		FRAME SECT,CAB:BOTTOM LEFT	80009	426-1583-00

http://manoman.sqhill.com

Fig. & Index No.	Tektronix Part No.	Serial/Model No. Eff	Dscont	Qty	1 2 3 4 5	Name & Description	Mfr Code	Mfr Part Number
3-1	386-4067-00			1		SUPPORT,CKT BD:	80009	386-4067-00
						(ATTACHING PARTS)		
-2	211-0008-00			5		SCREW,MACHINE:4-40 X 0.25 INCH,PNH STL	83385	OBD
						- - - * - - -		
-3	129-0222-00			2		SPACER,POST:0.27 L,W/4-40THD THRU,PLSTC	80009	129-0222-00
						(ATTACHING PARTS)		
-4	211-0101-00			2		SCREW,MACHINE:4-40 X 0.25,100 DEG,FLH STL	83385	OBD
						- - - * - - -		
-5	----- -----			1		CKT BOARD ASSY:DIGITIZER(SEE A25 REPL)		
-6	388-7156-01			1		. CIRCUIT BOARD:DIGITIZER	80009	388-7156-01
						(ATTACHING PARTS)		
-7	211-0005-00			3		. SCREW,MACHINE:4-40 X 0.125 INCH,PNH STL	83385	OBD
						- - - * - - -		
-8	129-0260-00			2		. POST,ELEC-MECH:0.255 HEX X 0.500 INCH L	80009	129-0260-00
						(ATTACHING PARTS)		
-9	210-0586-00			2		. NUT,PL,ASSEM WA:4-40 X 0.25,STL CD PL	83385	OBD
						- - - * - - -		
-10	105-0160-00			2		. EJECTOR,CKT BD:WHITE PLASTIC	80009	105-0160-00
-11	214-1337-00			2		. PIN,SPRING:0.10 OD X 0.25 INCH L,STL	80009	214-1337-00
-12	386-1556-00			6		. SUPPORT,CKT BD:0.215 H,ACETAL	80009	386-1556-00
-13	343-0213-00			1		. CLAMP,LOOP:0.2 ID,PLASTIC	80009	343-0213-00
-14	343-0089-00			1		. CLAMP,LOOP:LARGE	80009	343-0089-00
-15	131-0993-00			3		. BUS,CONDUCTOR:2 WIRE BLACK	00779	530153-2
	352-0166-00			1		. CONN BODY,PL,EL:8 WIRE BLACK	80009	352-0166-00
	131-0707-00			5		. CONNECTOR,TERM.:22-26 AWG,BRS& CU BE GOLD	22526	47439
-16	131-0608-00			19		. TERMINAL,PIN:0.365 L X 0.025 PH BRZ GOLD	22526	47357
	131-0589-00			2		. TERMINAL,PIN:0.46 L X 0.025 SQ	80009	131-0589-00
-17	426-0121-00			4		. MOUNT,COMPONENT:DELRIN	80009	426-0121-00
-18	361-0007-00			4		. SPACER,SLEEVE:0.250 INCH DIA,PLASTIC	80009	361-0007-00
-19	214-0579-00			11		. TERM,TEST POINT:BRS CD PL	80009	214-0579-00
-20	337-2738-00			1		. SHIELD,ELEC:BRASS	80009	337-2738-00
-21	175-3141-00			1		. CABLE ASSY,RF:50 OHM COAX,55.0 INCH LONG	80009	175-3141-00
-22	131-1003-00			4		. CONN,RCPT,ELEC:CKT BD MT,3 PRONG	80009	131-1003-00
-23	136-0252-07			24		. SOCKET,PIN CONN:W/O DIMPLE	22526	75060-012
-24	210-0599-00			2		. NUT,SLEEVE:4-40 X 0.391 INCH LONG	80009	210-0599-00
						(ATTACHING PARTS)		
-25	129-0260-00			2		. POST,ELEC-MECH:0.255 HEX X 0.500 INCH L	80009	129-0260-00
-26	210-0406-00			4		. NUT,PLAIN,HEX.:4-40 X 0.188 INCH,BRS	73743	2X12161-402
						- - - * - - -		
-27	214-0368-00			2		. SPRING,HLCPS:0.24 DIA X 0.438 INCH LONG	80009	214-0368-00
-28	210-0627-00			1		. RIVET,SOLID:0.042 DIA X 0.25 INCH,RDH	80009	210-0627-00
-29	343-0097-00			1		. RTNR,TRANSISTOR:HEAT SINK	80009	343-0097-00
-30	361-0942-00			1		. SPACER,MICROCKT:COPPER	80009	361-0942-00
-31	----- -----			1		CKT BOARD ASSY:CONTROL LOGIC(SEE A26 REPL)		
-32	214-1337-00			2		. PIN,SPRING:0.10 OD X 0.25 INCH L,STL	80009	214-1337-00
-33	105-0160-00			2		. EJECTOR,CKT BD:WHITE PLASTIC	80009	105-0160-00
-34	131-0993-00			3		. BUS,CONDUCTOR:2 WIRE BLACK	00779	530153-2
-35	131-0608-00			36		. TERMINAL,PIN:0.365 L X 0.025 PH BRZ GOLD	22526	47357
-36	----- -----			1		CKT BOARD ASSY:M.P.U.(SEE A27 REPL)		
-37	214-1337-00			2		. PIN,SPRING:0.10 OD X 0.25 INCH L,STL	80009	214-1337-00
-38	105-0160-00			2		. EJECTOR,CKT BD:WHITE PLASTIC	80009	105-0160-00
-39	136-0634-00			4		. SOCKET,PLUG-IN:20 LEAD DIP,CKT BD MTG	73803	CS9002-20
-40	136-0716-00			1		. SKT,PL-IN ELEK:MICROCKT,64 CONT	06776	ICN649-S5-G30
-41	346-0032-00			1		. STRAP,RETAINING:0.075 DIA X 4.0 L,MLD RBR	98159	2859-75-4
-42	131-0993-00			1		. BUS,CONDUCTOR:2 WIRE BLACK	00779	530153-2
	131-0993-02			2		. LINK,TERM.CONNE:2 WIRE RED	00779	530153-0
	131-0993-03			1		. LINK,TERM.CONNE:2 WIRE ORANGE	00779	530153-3
	131-0993-04			1		. LINK,TERM.CONNE:2 WIRE YELLOW	00779	530153-4
	131-0993-07			6		. LINK,TERM.CONNE:2 WIRE VIOLET	00779	530153-7
	131-0993-06			1		. LINK,TERM.CONNE:2 WIRE BLUE	00779	530153-6
	131-0993-09			2		. LINK,TERM.CONNE:2 WIRE WHITE	00779	530153-1
-43	131-0608-00			90		. TERMINAL,PIN:0.365 L X 0.025 PH BRZ GOLD	22526	47357
-44	----- -----			1		CKT BOARD ASSY:G.P.I.B.(SEE A30 REPL)		
-45	131-0608-00			34		. TERMINAL,PIN:0.365 L X 0.025 PH BRZ GOLD	22526	47357
-46	214-1337-00			2		. PIN,SPRING:0.10 OD X 0.25 INCH L,STL	80009	214-1337-00
-47	105-0160-00			2		. EJECTOR,CKT BD:WHITE PLASTIC	80009	105-0160-00

http://manoman.sghill.com

Fig. & Index No.	Tektronix Part No.	Serial/Model No. Eff	Dscont	Qty	1 2 3 4 5	Name & Description	Mfr Code	Mfr Part Number
3-48	175-2429-00			1		CA ASSY,SP,ELEC:15.0 INCH LONG	80009	175-2429-00
-49	----- -----			1		CKT BOARD ASSY:ROM(SEE A31 REPL)		
-50	214-1337-00			2		. PIN,SPRING:0.10 OD X 0.25 INCH L,STL	80009	214-1337-00
-51	105-0160-00			2		. EJECTOR,CKT BD:WHITE PLASTIC	80009	105-0160-00
-52	131-0608-00	B010100	B010175	9		. TERMINAL,PIN:0.365 L X 0.025 PH BRZ GOLD	22526	47357
	131-0608-00	B010176		6		. TERMINAL,PIN:0.365 L X 0.025 PH BRZ GOLD	22526	47357
-53	131-0993-00	B010100	B010175X	1		. BUS,CONDUCTOR:2 WIRE BLACK	00779	530153-2
-54	136-0694-00			1		. SKT,PL-IN ELEK:MICROCIRCUIT,28 CONTACT	73803	CS9002-28
-55	136-0578-00			8		. SKT,PL-IN ELEK:MICROCKT,24 PIN,LOW PROFILE	73803	C S9002-24
-56	----- -----			1		CKT BOARD ASSY:RAM(SEE A28 REPL)		
-57	214-1337-00			2		. PIN,SPRING:0.10 OD X 0.25 INCH L,STL	80009	214-1337-00
-58	105-0160-00			2		. EJECTOR,CKT BD:WHITE PLASTIC	80009	105-0160-00
-59	131-0608-00			13		. TERMINAL,PIN:0.365 L X 0.025 PH BRZ GOLD	22526	47357
-60	----- -----			2		. TRANSISTOR:(SEE Q760,Q860 REPL)		
						(ATTACHING PARTS)		
-61	210-0206-00			2		. TERMINAL,LUG:SE #10	86928	A373-147-1
-62	211-0008-00			2		. SCREW,MACHINE:4-40 X 0.25 INCH,PNH STL	83385	OBD
						- - - * - - -		
-63	----- -----			1		CKT BOARD ASSY:DISPLAY(SEE A29 REPL)		
-64	214-1337-00			2		. PIN,SPRING:0.10 OD X 0.25 INCH L,STL	80009	214-1337-00
-65	105-0160-00			2		. EJECTOR,CKT BD:WHITE PLASTIC	80009	105-0160-00
-66	136-0260-02			7		. SKT,PL-IN ELEK:MICROCIRCUIT,16 DIP,LOW CLE	71785	133-51-92-008
-67	131-0608-00			40		. TERMINAL,PIN:0.365 L X 0.025 PH BRZ GOLD	22526	47357
-68	175-2716-00			1		. CA ASSY,SP,ELEC:8.0 INCH LONG	80009	175-2716-00
-69	352-0213-00			2		. HOLDER,CABLE:FOR 0.16 X 0.08"CABLE,PLASTIC	80009	352-0213-00
-70	131-1003-00			2		. CONN,RCPT,ELEC:CKT BD MT,3 PRONG	80009	131-1003-00
-71	136-0252-07			58		. SOCKET,PIN CONN:W/O DIMPLE	22526	75060-012
-72	131-1426-00			1		. CONTACT SET,ELE:R ANGLE,0.250L,STRIP OF 36	22526	65524-136
-73	214-0579-00			3		. TERM,TEST POINT:BRS CD PL	80009	214-0579-00
-74	385-0124-00			2		SPACER,POST:2.0 L W/6-32 THD EA END,AL	80009	385-0124-00
						(ATTACHING PARTS)		
-75	211-0504-00			2		SCREW,MACHINE:6-32 X 0.25 INCH,PNH STL	83385	OBD
						- - - * - - -		
-76	166-0031-00			1		SPACER,SLEEVE:0.18 ID X 0.25 INCH LONG	80009	166-0031-00
						(ATTACHING PARTS)		
-77	210-0457-00			1		NUT,PL,ASSEM WA:6-32 X 0.312 INCH,STL	83385	OBD
-78	211-0014-00			1		SCREW,MACHINE:4-40 X 0.50 INCH,PNH STL	83385	OBD
						- - - * - - -		
-79	386-4066-00			2		SUPPORT,CKT BD:	80009	386-4066-00
						(ATTACHING PARTS)		
-80	211-0541-00			4		SCREW,MACHINE:6-32 X 0.25"100 DEG,FLH STL	83385	OBD
						- - - * - - -		
-81	369-0035-00			1		IMPLR,FAN AXIAL:PLASTIC	52792	3500-CCW.080N
-82	----- -----			1		CKT BOARD ASSY:FAN(SEE A16 REPL)		
						(ATTACHING PARTS)		
-83	211-0507-00			4		SCREW,MACHINE:6-32 X 0.312 INCH,PNH STL	83385	OBD
-84	211-0008-00			1		SCREW,MACHINE:4-40 X 0.25 INCH,PNH STL	83385	OBD
						- - - * - - -		
	----- -----			-		. CKT BOARD ASSY INCLUDES:		
-85	136-0252-07			3		. SOCKET,PIN CONN:W/O DIMPLE	22526	75060-012
-86	131-0608-00			2		. TERMINAL,PIN:0.365 L X 0.025 PH BRZ GOLD	22526	47357
-87	136-0269-02			1		. SKT,PL-IN ELEK:MICROCIRCUIT,14 DIP,LOW CLE	73803	CS9002-14
-88	343-0411-00			2		STRAP,RETAINING:2.494 X 0.8,STL TIN PL	80009	343-0411-00
-89	166-0099-00			2		POST,ELEC-MECH:0.25 OD X 1.719 INCHES L	80009	166-0099-00
-90	129-0748-00			1		SPACER POST:3.048 LONG X 0.25 INCH HEX	80009	129-0748-00
						(ATTACHING PARTS)		
-91	211-0538-00			1		SCREW,MACHINE:6-32 X 0.312"100 DEG,FLH STL	83385	OBD
						- - - * - - -		
-92	129-0349-00			1		POST,ELEC-MECH:0.25 OD X 1.265 INCH LONG	80009	129-0349-00
-93	----- -----			1		SWITCH,THRMSTC:(SEE S72 REPL)		
						(ATTACHING PARTS)		
-94	210-0586-00			2		NUT,PL,ASSEM WA:4-40 X 0.25,STL CD PL	83385	OBD
						- - - * - - -		
-95	210-0201-00			1		TERMINAL,LUG:0.12 ID,LOCKING,BRZ TIN PL	86928	OBD
						(ATTACHING PARTS)		
-96	210-0457-00			1		NUT,PL,ASSEM WA:6-32 X 0.312 INCH,STL	83385	OBD
-97	211-0578-00			4		SCREW,MACHINE:6-32 X 0.438 INCH,PNH STL	83385	OBD
						- - - * - - -		

http://manoman.sghill.com

Fig. & Index No.	Tektronix Part No.	Serial/Model No. Eff	Dscont	Qty	1 2 3 4 5	Name & Description	Mfr Code	Mfr Part Number
3-98	166-0029-00			4		SPACER,SLEEVE:0.125 L X 0.18 ID,AL	80009	166-0029-00
-99	441-1262-00			1		CHAS,TDR UNIT:MAIN	80009	441-1262-00
						(ATTACHING PARTS)		
-100	210-0586-00			20		NUT,PL,ASSEM WA:4-40 X 0.25,STL CD PL	83385	OBD
-101	211-0014-00			20		SCREW,MACHINE:4-40 X 0.50 INCH,PNH STL	83385	OBD
-102	210-0457-00			4		NUT,PL,ASSEM WA:6-32 X 0.312 INCH,STL	83385	OBD
-103	211-0507-00			1		SCREW,MACHINE:6-32 X 0.312 INCH,PNH STL	83385	OBD
						- - - * - - -		
-104	----- -----			1		CKT BOARD ASSY:MOTHER(SEE A8 REPL)		
-105	131-0608-00			98		. TERMINAL,PIN:0.365 L X 0.025 PH BRZ GOLD	22526	47357
-106	131-2279-00			5		. CONN,RCPT,ELEC:CKT BD,40/80,FEMALE	00779	3-530662-0
-107	131-1003-00			11		. CONN,RCPT,ELEC:CKT BD MT,3 PRONG	80009	131-1003-00
-108	136-0252-07			11		. SOCKET,PIN CONN:W/O DIMPLE	22526	75060-012
-109	131-2282-00			5		. CONN,RCPT,ELEC:EDGE CARD,22/44 CONT	00779	2-530662-5

http://manoman.sqhill.com

Fig. & Index No.	Tektronix Part No.	Serial/Model No. Eff	Dscont	Qty	1 2 3 4 5	Name & Description	Mfr Code	Mfr Part Number
4-1	337-2617-00			1		SHIELD,ELEC:CIRCUIT BOARD	80009	337-2617-00
						(ATTACHING PARTS)		
-2	210-0457-00			2		NUT,PL,ASSEM WA:6-32 X 0.312 INCH,STL	83385	OBD
						- - - * - - -		
-3	----- -----			1		CKT BOARD ASSY:AUX REGULATOR(SEE A7 REPL)		
						(ATTACHING PARTS)		
-4	211-0008-00			6		SCREW,MACHINE:4-40 X 0.25 INCH,PNH STL	83385	OBD
-5	210-0457-00			2		NUT,PL,ASSEM WA:6-32 X 0.312 INCH,STL	83385	OBD
						- - - * - - -		
	----- -----			-		. CKT BOARD ASSY INCLUDES:		
-6	214-0579-00			4		. TERM,TEST POINT:BRS CD PL	80009	214-0579-00
-7	131-0608-00			31		. TERMINAL,PIN:0.365 L X 0.025 PH BRZ GOLD	22526	47357
-8	----- -----			1		. TRANSISTOR:(SEE Q15 REPL)		
						(ATTACHING PARTS)		
-9	211-0008-00			1		. SCREW,MACHINE:4-40 X 0.25 INCH,PNH STL	83385	OBD
-10	210-1178-00			1		. WSHR,SHOULDERED:FOR MTG TO-220 TRANSISTOR	49671	DF 137A
						- - - * - - -		
-11	----- -----			1		. TRANSISTOR:(SEE Q14 REPL)		
						(ATTACHING PARTS)		
-12	211-0012-00			1		. SCREW,MACHINE:4-40 X 0.375,PNH STL CD PL	83385	OBD
-13	210-1178-00			1		. WSHR,SHOULDERED:FOR MTG TO-220 TRANSISTOR	49671	DF 137A
						- - - * - - -		
-14	343-0202-00			2		. CLAMP,CAPACITOR:	80009	343-0202-00
-15	136-0514-00			2		. SKT,PL-IN ELEC:MICROCIRCUIT,8 DIP	73803	CS9002-8
-16	----- -----			1		. MICROCIRCUIT,LI:(SEE U40 REPL)		
						(ATTACHING PARTS)		
-17	211-0008-00			1		. SCREW,MACHINE:4-40 X 0.25 INCH,PNH STL	83385	OBD
						- - - * - - -		
-18	----- -----			1		. TRANSISTOR:(SEE Q66 REPL)		
						(ATTACHING PARTS)		
-19	210-0586-00			1		. NUT,PL,ASSEM WA:4-40 X 0.25,STL CD PL	83385	OBD
-20	211-0008-00			1		. SCREW,MACHINE:4-40 X 0.25 INCH,PNH STL	83385	OBD
						- - - * - - -		
-21	214-2824-00			1		. HEAT SINK,ELEC:AUXILIARY REGULATOR	80009	214-2824-00
						(ATTACHING PARTS)		
-22	211-0008-00			2		. SCREW,MACHINE:4-40 X 0.25 INCH,PNH STL	83385	OBD
						- - - * - - -		
-23	351-0581-00			1		GUIDE,FLIPSTAND:	80009	351-0581-00
						(ATTACHING PARTS)		
-24	210-0457-00			2		NUT,PL,ASSEM WA:6-32 X 0.312 INCH,STL	83385	OBD
						- - - * - - -		
-25	407-2249-00			1		BRKT,CKT BD SUP:	80009	407-2249-00
						(ATTACHING PARTS)		
-26	211-0507-00			2		SCREW,MACHINE:6-32 X 0.312 INCH,PNH STL	83385	OBD
						- - - * - - -		
-27	200-2289-00			1		COV,HV PWR SPLY:	80009	200-2289-00
						(ATTACHING PARTS)		
-28	211-0008-00			3		SCREW,MACHINE:4-40 X 0.25 INCH,PNH STL	83385	OBD
						- - - * - - -		
-29	----- -----			1		CKT BOARD ASSY:HIGH VOLTAGE(SEE A20 REPL)		
						(ATTACHING PARTS)		
-30	211-0007-00			3		SCREW,MACHINE:4-40 X 0.188 INCH,PNH STL	83385	OBD
-31	211-0008-00			1		SCREW,MACHINE:4-40 X 0.25 INCH,PNH STL	83385	OBD
						- - - * - - -		
	----- -----			-		. CKT BOARD ASSY INCLUDES:		
-32	214-0579-00			5		. TERM,TEST POINT:BRS CD PL	80009	214-0579-00
-33	----- -----			1		. SEMICOND DEVICE:(SEE U21 REPL)		
						(ATTACHING PARTS)		
-34	210-0415-00			1		. NUT,PLAIN,HEX.:10-24 X 1.25 INCH,BRS	80009	210-0415-00
-35	220-0835-00			1		. NUT,PLAIN HEX:10-24,0.375 DIA,NYLON	95987	N-1024-X
						- - - * - - -		
-36	----- -----			1		. TRANSFORMER:(SEE T14 REPL)		
						(ATTACHING PARTS)		
-37	211-0008-00			4		. SCREW,MACHINE:4-40 X 0.25 INCH,PNH STL	83385	OBD
						- - - * - - -		

http://manoman.sqhill.com

Fig. & Index No.	Tektronix Part No.	Serial/Model No. Eff	Dscont	Qty	1 2 3 4 5	Name & Description	Mfr Code	Mfr Part Number
4-38	131-0608-00			17		. TERMINAL,PIN:0.365 L X 0.025 PH BRZ GOLD	22526	47357
	131-0589-00			9		. TERMINAL,PIN:0.46 L X 0.025 SQ	80009	131-0589-00
-39	129-0072-00			1		. INSULATOR,STDF:0.938 INCH LONG	80009	129-0072-00
-40	361-0007-00			1		. SPACER,SLEEVE:0.250 INCH DIA,PLASTIC	80009	361-0007-00
-41	136-0252-07			6		. SOCKET,PIN CONN:W/O DIMPLE	22526	75060-012
-42	136-0514-00			6		. SKT,PL-IN ELEC:MICROCIRCUIT,8 DIP	73803	CS9002-8
-43	129-0203-00			1		SPACER,POST:1.141 LONG X 05 INCH HEX	80009	129-0203-00
						(ATTACHING PARTS)		
-44	211-0008-00			1		SCREW,MACHINE:4-40 X 0.25 INCH,PNH STL	83385	OBD
						- - - * - - -		
-45	220-0547-01			4		NUT,BLOCK:0.38 X 0.26 XO.282 (2)4-40 THD	000FW	OBD
						(ATTACHING PARTS)		
-46	211-0101-00			4		SCREW,MACHINE:4-40 X 0.25,100 DEG,FLH STL	83385	OBD
						- - - * - - -		
-47	214-0001-00			1		HINGE,BUTT:1.5 X 1.0 INCH,BRS	71126	B78
						(ATTACHING PARTS)		
-48	210-0586-00			2		NUT,PL,ASSEM WA:4-40 X 0.25,STL CD PL	83385	OBD
-49	211-0101-00			2		SCREW,MACHINE:4-40 X 0.25,100 DEG,FLH STL	83385	OBD
						- - - * - - -		
-50	380-0563-00			1		HSG,HV PWR SPLY:	80009	380-0563-00
						(ATTACHING PARTS)		
-51	210-0457-00			5		NUT,PL,ASSEM WA:6-32 X 0.312 INCH,STL	83385	OBD
-52	211-0507-00			5		SCREW,MACHINE:6-32 X 0.312 INCH,PNH STL	83385	OBD
						- - - * - - -		
-53	342-0442-00			2		INSULATOR,WIRE:	80009	342-0442-00
-54	----- -----			1		CKT BOARD ASSY:HORIZ OUTPUT(SEE A17 REPL)		
						(ATTACHING PARTS)		
-55	211-0008-00			3		SCREW,MACHINE:4-40 X 0.25 INCH,PNH STL	83385	OBD
						- - - * - - -		
	----- -----			-		. CKT BOARD ASSY INCLUDES:		
-56	136-0252-07			58		. SOCKET,PIN CONN:W/O DIMPLE	22526	75060-012
-57	131-1003-00			4		. CONN,RCPT,ELEC:CKT BD MT,3 PRONG	80009	131-1003-00
-58	200-0945-01			1		. COVER,HALF XSTR:DUAL TO-18,W/2-56 THD	80009	200-0945-01
						(ATTACHING PARTS)		
-59	211-0001-00			1		. SCREW,MACHINE:2-56 X 0.25 INCH,PNH STL	87308	OBD
						- - - * - - -		
-60	200-0945-00			1		. COVER,HALF XSTR:DUAL TO-18,ALUMINUM	80009	200-0945-00
-61	131-0608-00			16		. TERMINAL,PIN:0.365 L X 0.025 PH BRZ GOLD	22526	47357
-62	214-0579-00			10		. TERM,TEST POINT:BRS CD PL	80009	214-0579-00
-63	195-0377-00			2		. LEAD,ELECTRICAL:2.0 INCH LONG	80009	195-0377-00
-64	441-1465-00			1		CHASSIS,SCOPE:HORIZONTAL AMPLIFIER	80009	441-1465-00
						(ATTACHING PARTS)		
-65	210-0457-00			2		NUT,PL,ASSEM WA:6-32 X 0.312 INCH,STL	83385	OBD
-66	211-0008-00			2		SCREW,MACHINE:4-40 X 0.25 INCH,PNH STL	83385	OBD
						- - - * - - -		
-67	----- -----			1		CKT BOARD ASSY:VERTICAL OUTPUT(SEE A18 REPL)		
						(ATTACHING PARTS)		
-68	211-0008-00			5		SCREW,MACHINE:4-40 X 0.25 INCH,PNH STL	83385	OBD
						- - - * - - -		
	----- -----			-		. CKT BOARD ASSY INCLUDES:		
-69	200-1167-00			1		. COVER,XSTR:TEMP STAB FOR 2 TO-18 CS STYLE	80009	200-1167-00
-70	131-0608-00			8		. TERMINAL,PIN:0.365 L X 0.025 PH BRZ GOLD	22526	47357
-71	214-0973-00			2		. HEAT SINK,ELEC:0.28 X 0.18 OVAL X 0.187"H	80009	214-0973-00
-72	214-0579-00			2		. TERM,TEST POINT:BRS CD PL	80009	214-0579-00
-73	136-0252-07			4		. SOCKET,PIN CONN:W/O DIMPLE	22526	75060-012
-74	131-1003-00			4		. CONN,RCPT,ELEC:CKT BD MT,3 PRONG	80009	131-1003-00
-75	----- -----			1		. TRANSISTOR:(SEE Q196 REPL)		
						(ATTACHING PARTS)		
-76	210-0551-00			2		. NUT,PLAIN,HEX.:4-40 X 0.25 INCH,STL	83385	OBD
-77	211-0097-00			1		. SCREW,MACHINE:4-40 X 0.312 INCH,PNH STL	83385	OBD
						- - - * - - -		
-78	----- -----			1		. MICROCIRCUIT,LI:(SEE U150 REPL)		
						(ATTACHING PARTS)		
-79	210-0407-00			1		. NUT,PLAIN,HEX.:6-32 X 0.25 INCH,BRS	73743	3038-0228-402
-80	210-0055-00			1		. WASHER,LOCK:SPLIT,0.145 ID X 0.253 OD,STL	83385	OBD
						- - - * - - -		

http://manoman.sqhill.com

Fig. & Index No.	Tektronix Part No.	Serial/Model No. Eff	Dscont	Qty	1 2 3 4 5	Name & Description	Mfr Code	Mfr Part Number
4-81	136-0252-00			20		. SOCKET,PIN TERM:0.145 INCH LONG	00779	2-330808-7
	136-0252-06			10		. SOCKET,PIN TERM:0.178 INCH LONG	00779	2-332095-6
-82	214-2416-00			1		. HT SK MICROCKT:VERTICAL AMPLIFIER,BACK	80009	214-2416-00
						(ATTACHING PARTS)		
-83	210-0551-00			2		. NUT,PLAIN,HEX.:4-40 X 0.25 INCH,STL	83385	OBD
-84	211-0511-00			2		. SCREW,MACHINE:6-32 X 0.500,PNH,STL,CD PL	83385	OBD
-85	211-0008-00			2		. SCREW,MACHINE:4-40 X 0.25 INCH,PNH STL	83385	OBD
						- - - * - - -		
-86	129-0303-00			2		. POST,ELEC-MECH:0.25 OD X 0.237 INCH LONG	80009	129-0303-00
-87	348-0031-00			2		. GROMMET,PLASTIC:0.156 INCH DIA	80009	348-0031-00
-88	210-0599-00			2		. NUT,SLEEVE:4-40 X 0.391 INCH LONG	80009	210-0599-00
						(ATTACHING PARTS)		
-89	211-0097-00			2		. SCREW,MACHINE:4-40 X 0.312 INCH,PNH STL	83385	OBD
-90	210-0551-00			2		. NUT,PLAIN,HEX.:4-40 X 0.25 INCH,STL	83385	OBD
						- - - * - - -		
-91	210-0627-00			1		. RIVET,SOLID:0.042 DIA X 0.25 INCH,RDH	80009	210-0627-00
-92	214-0368-00			1		. SPRING,HLCPS:0.24 DIA X 0.438 INCH LONG	80009	214-0368-00
-93	343-0097-00			1		. RTNR,TRANSISTOR:HEAT SINK	80009	343-0097-00
-94	214-1683-00			1		. HEAT SINK,ELEC:TRANSISTOR	80009	214-1683-00
-95	----- -----			1		RES.,FXD,FILM:(SEE R83 REPL)		
						(ATTACHING PARTS)		
-96	211-0511-00			2		SCREW,MACHINE:6-32 X 0.500,PNH,STL,CD PL	83385	OBD
-97	210-0894-00			2		WASHER,NONMETAL:0.19 ID X 0.438" OD,PLSTC	09422	OBD
						- - - * - - -		
-98	166-0107-00			2		SPACER,SLEEVE:0.18 ID X 0.219 L	80009	166-0107-00
-99	210-0201-00			1		TERMINAL,LUG:0.12 ID,LOCKING,BRZ TIN PL	86928	OBD
						(ATTACHING PARTS)		
-100	211-0008-00			1		SCREW,MACHINE:4-40 X 0.25 INCH,PNH STL	83385	OBD
						- - - * - - -		
-101	441-1463-00			1		CHASSIS,SCOPE:VERTICAL AMPLIFIER	80009	441-1463-00
						(ATTACHING PARTS)		
-102	210-0457-00			5		NUT,PL,ASSEM WA:6-32 X 0.312 INCH,STL	83385	OBD
-103	211-0507-00			5		SCREW,MACHINE:6-32 X 0.312 INCH,PNH STL	83385	OBD
						- - - * - - -		
-104	136-0745-00			1		SKT,PL-IN ELEK:CRT,10 PIN W/LEADS	80009	136-0745-00
-105	343-0254-00			1		. CLP,ELCTRN TUBE:	80009	343-0254-00
-106	200-0917-01			1		. COV,ELECTRON TU:2.052 OD X 0.291" THK,PLSTC	80009	200-0917-01
-107	136-0304-03			1		. SKT,PL-IN ELEC:ELECTRON TUBE,14 CONTACT	80009	136-0304-03
-108	131-0707-00			5		. CONNECTOR,TERM.:22-26 AWG,BRS& CU BE GOLD	22526	47439
-109	131-0621-00			5		. CONNECTOR,TERM:22-26 AWG,BRS& CU BE GOLD	22526	46231
-110	352-0163-06			1		. CONN BODY,PL,EL:5 WIRE BLUE	80009	352-0163-06
-111	352-0205-02			1		. CONN BODY,PL,EL:9 WIRE RED	80009	352-0205-02
-112	367-0117-00			1		PULL,SOCKET:	80009	367-0117-00
-113	386-4070-00			1		SUPPORT,CKT BD:REAR	80009	386-4070-00
						(ATTACHING PARTS)		
-114	211-0510-00			4		SCREW,MACHINE:6-32 X 0.375,PNH,STL,CD PL	83385	OBD
-115	210-0949-00			4		WASHER,FLAT:0.141 ID X 0.50 INCH OD,BRS	12327	OBD
-116	211-0507-00			2		SCREW,MACHINE:6-32 X 0.312 INCH,PNH STL	83385	OBD
						- - - * - - -		
-117	343-0205-01			1		RTNR,ELCTRN TU:3.0 DIA X 1.5L,DELRIN	80009	343-0205-01
						(ATTACHING PARTS)		
-118	211-0170-00			2		SCREW,MACHINE:4-40 X 2.75 INCH,PNH STL	83385	OBD
-119	214-1333-00			2		SPRING,HLCPS:0.213 OD X 0.375 INCH LONG	80009	214-1333-00
						- - - * - - -		
-120	354-0347-00			1		RING,CRT CLAMP:	80009	354-0347-00
-121	343-0217-00			1		CLAMP,COIL:Y-AXIS	80009	343-0217-00
						(ATTACHING PARTS)		
-122	213-0138-00			2		SCR,TPG,TF:4-24 X 0.188 INCH,PNH STL	83385	OBD
						- - - * - - -		
-123	----- -----			1		COIL:(SEE L22 REPL)		
-124	352-0169-00			1		HLDR,TERM CONN:2 WIRE BLACK	80009	352-0169-00
-125	348-0055-00			1		GROMMET,PLASTIC:0.25 INCH DIA	80009	348-0055-00
-126	214-0291-00			1		CONTACT,SPRING:1.188 X 0.375 X 0.25 INCH	80009	214-0291-00
						(ATTACHING PARTS)		
-127	210-0586-00			1		NUT,PL,ASSEM WA:4-40 X 0.25,STL CD PL	83385	OBD
-128	211-0008-00			1		SCREW,MACHINE:4-40 X 0.25 INCH,PNH STL	83385	OBD
						- - - * - - -		

http://manoman.sqhill.com

Fig. & Index No.	Tektronix Part No.	Serial/Model No. Eff	Dscont	Qty	1 2 3 4 5	Name & Description	Mfr Code	Mfr Part Number
4-129	----- -----			1		COIL:(SEE L21 REPL)		
-130	352-0169-00			1		HLDR,TERM CONN:2 WIRE BLACK	80009	352-0169-00
-131	337-1460-00			1		SHLD,ELECTRON T:CRT	80009	337-1460-00
-132	----- -----			1		DELAY LINE:(SEE DL5 REPL)		
						(ATTACHING PARTS)		
-133	211-0507-00	B010100	B010150	1		SCREW,MACHINE:6-32 X 0.312 INCH,PNH STL	83385	OBD
	211-0510-00	B010151		1		SCREW,MACHINE:6-32 X 0.375,PNH,STL,CD PL	83385	OBD
	210-0803-00	XB010151		1		WASHER,FLAT:0.15 ID X 0.032 THK,STL CD PL	12327	OBD
						- - - * - - -		
	343-0298-00	B010100	B010150	1		CLAMP,LOOP:PLASTIC,W/ADHESIVE BACK	95987	HPC25
	343-0150-00	B010151		1		CLAMP,TIE DOWN:	95987	OBD
	343-0549-00	B010151		1		STRAP,TIEDOWN:0.091 W X 3.62 INCH LONG	59730	TY100
	348-0056-00			1		GROMMET,PLASTIC:0.375 INCH DIA	80009	348-0056-00
-134	386-4064-00			1		SUPPORT,CHASSIS:MAIN	80009	386-4064-00
						(ATTACHING PARTS)		
-135	210-0457-00			3		NUT,PL,ASSEM WA:6-32 X 0.312 INCH,STL	83385	OBD
-136	211-0507-00			3		SCREW,MACHINE:6-32 X 0.312 INCH,PNH STL	83385	OBD
						- - - * - - -		
	198-4184-00			1		WIRE SET,ELEC:	80009	198-4184-00
-137	175-0825-00			FT		. WIRE,ELECTRICAL:2 WIRE RIBBON	80009	175-0825-00
-138	175-0826-00			FT		. WIRE,ELECTRICAL:3 WIRE RIBBON	80009	175-0826-00
-139	175-0830-00			FT		. WIRE,ELECTRICAL:7 WIRE RIBBON	08261	SS-0726-710610C
	175-0858-00			FT		. WIRE,ELECTRICAL:7 WIRE RIBBON	08261	SS-0722-7(1061)
-140	175-0857-00			FT		. WIRE,ELECTRICAL:8 WIRE RIBBON	08261	SS-0822-7(1061)
-141	175-0833-00			FT		. WIRE,ELECTRICAL:10 WIRE RIBBON	08261	SS-1026-7
-142	352-0169-00			1		. HLDR,TERM CONN:2 WIRE BLACK	80009	352-0169-00
-143	352-0161-00			1		. HLDR,TERM CONN:3 WIRE BLACK	80009	352-0161-00
	352-0161-03			1		. CONN BODY,PL,EL:3 WIRE ORANGE	80009	352-0161-03
-144	352-0163-03			1		. CONN BODY,PL,EL:5 WIRE ORANGE	80009	352-0163-03
-145	352-0165-07			4		. CONN BODY,PL,EL:7 WIRE VIOLET	80009	352-0165-07
-146	352-0166-08			2		. CONN BODY,PL,EL:8 WIRE GRAY	80009	352-0166-08
-147	352-0167-07			9		. CONN BODY,PL,EL:9 WIRE VIOLET	80009	352-0167-07
-148	352-0168-00			2		. CONN BODY,PL,EL:10 WIRE BLACK	80009	352-0168-00
-149	131-0707-00			88		. CONNECTOR,TERM.:22-26 AWG,BRS& CU BE GOLD	22526	47439
-150	204-0675-00			6		. CONN BODY,PLUG:1 LKG CLIP POZ,0.025 SQ PIN	00779	87175-2
-151	214-2629-00			4		. PIN,ACTUATOR:	80009	214-2629-00
-152	131-1810-00			6		. CONTACT,ELEC:FEMALE,FOR 0.025 SQ PIN	00779	87124-1
-153	179-2701-00			1		WIRING HARNESS:VERTICAL/HORIZONTAL	80009	179-2701-00
	131-0707-00			18		. CONNECTOR,TERM.:22-26 AWG,BRS& CU BE GOLD	22526	47439
-154	175-0832-00			FT		. WIRE,ELECTRICAL:9 WIRE RIBBON	08261	SS-0926(1061)0C
-155	343-0549-00			8		. STRAP,TIEDOWN:0.091 W X 3.62 INCH LONG	59730	TY100
	352-0167-00			2		. HLDR,TERM CONN:9 WIRE BLACK	80009	352-0167-00
	179-2702-00			1		WIRING HARNESS:MAIN	80009	179-2702-00
	131-0707-00			100		. CONNECTOR,TERM.:22-26 AWG,BRS& CU BE GOLD	22526	47439
	214-2629-00			6		. PIN,ACTUATOR:	80009	214-2629-00
	131-1810-00			2		. CONTACT,ELEC:FEMALE,FOR 0.025 SQ PIN	00779	87124-1
	204-0675-00			4		. CONN BODY,PLUG:1 LKG CLIP POZ,0.025 SQ PIN	00779	87175-2
	343-0549-00			16		. STRAP,TIEDOWN:0.091 W X 3.62 INCH LONG	59730	TY100
	175-0825-00			FT		. WIRE,ELECTRICAL:2 WIRE RIBBON	80009	175-0825-00
-156	175-0827-00			FT		. CABLE,SP,ELEC:4,26 AWG,STRD,PVC JKT,RBN	08261	SS04267(1061)0C
-157	175-0828-00			FT		. WIRE,ELECTRICAL:5 WIRE RIBBON	08261	SS-0526-710610C
	175-0830-00			FT		. WIRE,ELECTRICAL:7 WIRE RIBBON	08261	SS-0726-710610C
	175-0831-00			FT		. WIRE,ELECTRICAL:8 WIRE RIBBON	08261	SS-0826-710610C
	175-0833-00			FT		. WIRE,ELECTRICAL:10 WIRE RIBBON	08261	SS-1026-7
	175-0858-00			FT		. WIRE,ELECTRICAL:7 WIRE RIBBON	08261	SS-0722-7(1061)
	175-0857-00			FT		. WIRE,ELECTRICAL:8 WIRE RIBBON	08261	SS-0822-7(1061)
	352-0169-00			2		. HLDR,TERM CONN:2 WIRE BLACK	80009	352-0169-00
	352-0169-02			1		. CONN BODY,PL,EL:2 WIRE RED	80009	352-0169-00
	352-0163-05			2		. CONN BODY,PL,EL:5 WIRE GREEN	80009	352-0163-05
	352-0165-07			2		. CONN BODY,PL,EL:7 WIRE VIOLET	80009	352-0165-07
	352-0166-04			2		. CONN BODY,PL,EL:8 WIRE YELLOW	80009	352-0166-04
	352-0167-02			2		. CONN BODY,PL,EL:9 WIRE RED	80009	352-0167-02
	352-0167-04			2		. CONN BODY,PL,EL:9 WIRE YELLOW	80009	352-0167-04
	352-0167-07			1		. CONN BODY,PL,EL:9 WIRE VIOLET	80009	352-0167-07
	352-0168-02			2		. CONN BODY,PL,EL:10 WIRE RED	80009	352-0168-02

http://manoman.sqhill.com

Fig. & Index No.	Tektronix Part No.	Serial/Model No. Eff	Dscont	Qty	1 2 3 4 5	Name & Description	Mfr Code	Mfr Part Number
5-1	426-0681-00			1		FR,PUSH BUTTON:GRAY PLASTIC	80009	426-0681-00
-2	426-1072-00			3		FRAME,PUSH BTN:PLASTIC	80009	426-1072-00
-3	426-0568-00			9		FR,PUSHBUTTON:PANEL MOUNT	80009	426-0568-00
-4	366-1023-01			1		KNOB:GY,0.127 ID X0.392 OD X 0.531 H	80009	366-1023-01
	213-0246-00			1		. SETSCREW:5-40 X 0.093 ITL BK OXD,HEX SKT	71159	OBD
-5	358-0599-00			1		BUSHING,SLEEVE:0.125 ID X 0.234 THK,PLSTC	28520	B-187-125
-6	333-2320-00			1		PANEL,REAR:	80009	333-2320-00
						(ATTACHING PARTS)		
-7	213-0055-00			5		SCR,TPG,THD FOR:2-32 X 0.188 INCH,PNH STL	93907	OBD
						- - - * - - -		
-8	348-0204-00			1		SHLD GSKT,ELEK:FINGER TYPE,10.65 INCH LONG	80009	348-0204-00
	129-0103-00			1		POST,BDG,ELEC:ASSEMBLY	80009	129-0103-00
						(ATTACHING PARTS)		
-9	210-0583-00			1		NUT,PLAIN,HEX.:0.25-32 X 0.312 INCH,BRS	73743	2X20317-402
-10	210-0046-00			1		WASHER,LOCK:0.261 ID,INTL,0.018 THK,BRS	78189	1214-05-00-0541C
						- - - * - - -		
	----- -----			-		. GND POST ASSY INCLUDES:		
-11	200-0103-00			1		. NUT,PLAIN,KNURL:0.25-28 X 0.375" OD,BRASS	80009	200-0103-00
-12	129-0077-00			1		. STUD,SHOULDERED:0.938 INCH LONG,BRASS	80009	129-0077-00
-13	337-1542-00			1		SHLD GSKT,ELECT:2.10 INCHES LONG	80009	337-1542-00
-14	337-1543-00			3		SHLD GSKT,ELECT:2.50 INCHES LONG	80009	337-1543-00
-15	131-1315-01			1		CONN,RCPT,ELEC:BNC,FEMALE	24931	28JR 306-1
						(ATTACHING PARTS)		
-16	220-0495-00			1		NUT,PLAIN,HEX.:0.375-32 X 0.438 INCH BRS	73743	OBD
-17	210-0012-00			1		WASHER,LOCK:INTL,0.375 ID X 0.50" OD STL	78189	1220-02-00-0541C
						- - - * - - -		
-18	351-0469-01			2		GUIDE,SWITCH:3 BUTTON	80009	351-0469-01
-19	426-0806-02			1		FRAME PNL,CAB.:LOWER FRONT	80009	426-0806-02
						(ATTACHING PARTS)		
-20	213-0270-00			4		SCR,TPG,THD FOR:10-32 X 0.75 INCH FILH STL	83385	OBD
						- - - * - - -		
-21	366-1480-02			1		PUSH BUTTON:GRAY	80009	366-1480-02
-22	386-3440-00			2		LT CNDCT,PB ILL:3 BUTTON,7.5 MM SPACING	80009	386-3440-00
-23	200-0935-00			2		BASE,LAMPHOLDER:0.29 OD X 0.19 CASE	80009	200-0935-00
-24	----- -----			1		CKT BOARD ASSY:MODE SWITCH(SEE A2 REPL)		
						(ATTACHING PARTS)		
-25	211-0008-00			5		SCREW,MACHINE:4-40 X 0.25 INCH,PNH STL	83385	OBD
						- - - * - - -		
	----- -----			-		. CKT BOARD ASSY INCLUDES:		
-26	366-1559-00			3		. PUSH BUTTON:SIL GY,0.18 SQ X 0.43	80009	366-1559-00
-27	366-1765-05			1		. PUSH BUTTON:WHITE,LEFT	80009	366-1765-05
-28	366-1765-01			2		. PUSH BUTTON:WHITE,ALT	80009	366-1765-01
-29	366-1765-02			1		. PUSH BUTTON:WHITE,ADD	80009	366-1765-02
-30	366-1765-03			2		. PUSH BUTTON:WHITE,CHOP	80009	366-1765-03
-31	366-1765-04			1		. PUSH BUTTON:WHITE,RIGHT	80009	366-1765-04
-32	378-0074-00			6		. REFLECTOR,LIGHT:PUSH BUTTON	80009	378-0074-00
-33	366-1650-00			6		. PUSH BUTTON:CLEAR,0.184 X0.214 X 8.0 L	80009	360-1650-00
-34	366-1765-06			1		. PUSH BUTTON:WHITE,A	80009	366-1765-06
-35	366-1765-07			1		. PUSH BUTTON:WHITE,B	80009	366-1765-07
-36	384-1136-00			3		. EXTENSION SHAFT:0.95 INCH LONG	80009	384-1136-00
-37	384-1354-00			6		. EXTENSION SHAFT:1.585 INCH LONG,OFFSET,NYL	80009	384-1354-00
-38	----- -----			2		. ACTR ASSY,PB:(SEE S109,S110 REPL)		
-39	----- -----			9		. ACTR ASSY,PB:(SEE S1,S2 REPL)		
-40	----- -----			1		. ACTR ASSY,PB:(SEE S40 REPL)		
-41	343-0495-09			1		. CLIP,SWITCH:FRONT,7.5 MM,9 UNIT	80009	343-0495-09
						(ATTACHING PARTS)		
-42	210-3033-00			9		. EYELET,METALLIC:0.59 OD X 0.156 INCH LONG	07707	SE-25
						- - - * - - -		
-43	343-0495-07			1		. CLIP,SWITCH:FRONT,7.5MM,7 UNIT	80009	343-0495-07
						(ATTACHING PARTS)		
-44	210-3033-00			7		. EYELET,METALLIC:0.59 OD X 0.156 INCH LONG	07707	SE-25
						- - - * - - -		
-45	343-0496-03			3		. CLIP,SWITCH:FRONT,10 MM X 3 UNIT	80009	343-0496-03
						(ATTACHING PARTS)		
-46	210-3033-00			9		. EYELET,METALLIC:0.59 OD X 0.156 INCH LONG	07707	SE-25
						- - - * - - -		

http://manoman.sqhill.com

Fig. & Index No.	Tektronix Part No.	Serial/Model No. Eff	Dscont	Qty	1 2 3 4 5	Name & Description	Mfr Code	Mfr Part Number
5-47	343-0497-03			3		. CLIP,SWITCH:REAR,10 MM X 3 UNIT	80009	343-0497-03
						(ATTACHING PARTS)		
-48	210-3033-00			9		. EYELET,METALLIC:0.59 OD X 0.156 INCH LONG	07707	SE-25
						- - - * - - -		
-49	384-1148-00			1		. EXTENSION SHAFT:3.14 L X 0.123 OD,EPOXY-GL	80009	384-1148-00
-50	376-0029-00			1		. CPLG,SHAFT,RGD:0.128 ID X 0.312 OD X 0.5"L	80009	376-0029-00
-51	343-0499-05			1		. CLIP,SWITCH:REAR,7.5MM X 5 UNIT	80009	343-0499-05
						(ATTACHING PARTS)		
-52	210-3033-00			5		. EYELET,METALLIC:0.59 OD X 0.156 INCH LONG	07707	SE-25
						- - - * - - -		
-53	131-0608-00			69		. TERMINAL,PIN:0.365 L X 0.025 PH BRZ GOLD	22526	47357
	131-0589-00			18		. TERMINAL,PIN:0.46 L X 0.025 SQ	80009	131-0589-00
-54	136-0252-07			1		. SOCKET,PIN CONN:W/O DIMPLE	22526	75060-012
-55	131-1003-00			1		. CONN,RCPT,ELEC:CKT BD MT,3 PRONG	80009	131-1003-00
-56	343-0499-03			3		. CLIP,SWITCH:7.5 MM,4 UNIT	80009	343-0499-03
						(ATTACHING PARTS)		
-57	210-3033-00			9		. EYELET,METALLIC:0.59 OD X 0.156 INCH LONG	07707	SE-25
						- - - * - - -		
-58	384-1876-00			1		EXTENSION SHAFT:	80009	384-1876-00
-59	348-0193-00			1		FLIP-STAND,CAB.:	80009	348-0193-00
-60	407-2109-01			2		BRACKET,HINGE:	80009	407-2109-01
						(ATTACHING PARTS)		
-61	210-0457-00			2		NUT,PL,ASSEM WA:6-32 X 0.312 INCH,STL	83385	OBD
						- - - * - - -		
-62	200-1731-00			1		COVER,ELEC SW:1.9 X 1.0 INCH	80009	200-1731-00
						(ATTACHING PARTS)		
-63	210-0405-00			1		NUT,PLAIN,HEX.:2-56 X 0.188 INCH,BRS	73743	2X12157-402
-64	211-0034-00			1		SCREW,MACHINE:2-56 X 0.50 INCH,PNH	83385	OBD
-65	210-0850-00			1		WASHER,FLAT:0.093 ID X 0.281 INCH OD	12327	OBD
						- - - * - - -		
-66	----- -----			1		SWITCH,PUSH:(SEE S10 REPL)		
						(ATTACHING PARTS)		
-67	211-0008-00			2		SCREW,MACHINE:4-40 X 0.25 INCH,PNH STL	83385	OBD
						- - - * - - -		
-68	407-1873-00			1		BRACKET,ANGLE:POWER SWITCH,ALUMINUM	80009	407-1873-00
						(ATTACHING PARTS)		
-69	210-0457-00			2		NUT,PL,ASSEM WA:6-32 X 0.312 INCH,STL	83385	OBD
						- - - * - - -		
-70	210-0202-00			1		TERMINAL,LUG:0.146 ID,LOCKING,BRZ TINNED	78189	2104-06-00-2520N
						(ATTACHING PARTS)		
-71	210-0457-00			1		NUT,PL,ASSEM WA:6-32 X 0.312 INCH,STL	83385	OBD
						- - - * - - -		
-72	210-0457-00			1		NUT,PL,ASSEM WA:6-32 X 0.312 INCH,STL	83385	OBD
-73	131-0800-00			2		CONTACT,ELEC:PLUG-IN GROUND	80009	131-0800-00
						(ATTACHING PARTS)		
-74	213-0138-00			3		SCR,TPG,TF:4-24 X 0.188 INCH,PNH STL	83385	OBD
-75	211-0008-00			1		SCREW,MACHINE:4-40 X 0.25 INCH,PNH STL	83385	OBD
-76	210-0586-00			1		NUT,PL,ASSEM WA:4-40 X 0.25,STL CD PL	83385	OBD
-77	210-0202-00			1		TERMINAL,LUG:0.146 ID,LOCKING,BRZ TINNED	78189	2104-06-00-2520N
						- - - * - - -		
-78	343-0007-00			1		CLAMP,LOOP:	95987	5-8-6B
						(ATTACHING PARTS)		
-79	210-0457-00			1		NUT,PL,ASSEM WA:6-32 X 0.312 INCH,STL	83385	OBD
-80	211-0578-00			1		SCREW,MACHINE:6-32 X 0.438 INCH,PNH STL	83385	OBD
-81	210-0853-00			1		WASHER,FLAT:0.25 ID X 0.50 OD	86044	OBD
						- - - * - - -		
-82	337-2603-00			3		SHIELD,ELEC:CIRCUIT BOARD	80009	337-2603-00
						(ATTACHING PARTS)		
-83	211-0008-00			9		SCREW,MACHINE:4-40 X 0.25 INCH,PNH STL	83385	OBD
						- - - * - - -		
-84	131-0799-00			3		CONTACT,ELEC:PLUG-IN GROUND	80009	131-0799-00
						(ATTACHING PARTS)		
-85	210-0586-00			3		NUT,PL,ASSEM WA:4-40 X 0.25,STL CD PL	83385	OBD
-86	211-0008-00			3		SCREW,MACHINE:4-40 X 0.25 INCH,PNH STL	83385	OBD
						- - - * - - -		

http://manoman.sqhill.com

Fig. & Index No.	Tektronix Part No.	Serial/Model No. Eff	Dscont	Qty	1 2 3 4 5	Name & Description	Mfr Code	Mfr Part Number
5-87	131-0930-00			3		CONTACT,ELEC:PLUG-IN GROUND	80009	131-0930-00
						(ATTACHING PARTS)		
-88	210-0586-00			3		NUT,PL,ASSEM WA:4-40 X 0.25,STL CD PL	83385	OBD
-89	211-0008-00			3		SCREW,MACHINE:4-40 X 0.25 INCH,PNH STL	83385	OBD
						- - - * - - -		
-90	351-0181-06			4		GUIDE,SLIDE:PLUG-IN UNIT,LWR,BLK NYLON	80009	351-0181-06
						(ATTACHING PARTS)		
-91	213-0054-00			4		SCR,TPG,THD FOR:6-32 X 0.312 INCH,PNH STL	93907	OBD
						- - - * - - -		
-92	441-1286-01			1		CHAS,PL-IN HSG:TOP	80009	441-1286-01
						(ATTACHING PARTS)		
-93	210-0457-00			4		NUT,PL,ASSEM WA:6-32 X 0.312 INCH,STL	83385	OBD
-94	211-0507-00			4		SCREW,MACHINE:6-32 X 0.312 INCH,PNH STL	83385	OBD
						- - - * - - -		
-95	426-1470-00			2		FRAME SECT,CAB.:COUPLING	80009	426-1470-00
						(ATTACHING PARTS)		
-96	211-0507-00			4		SCREW,MACHINE:6-32 X 0.312 INCH,PNH STL	83385	OBD
						- - - * - - -		
-97	407-2093-00			2		BRACKET,ANGLE:HINGE,ALUMINUM	80009	407-2093-00
						(ATTACHING PARTS)		
-98	211-0559-00			2		SCREW,MACHINE:6-32 X 0.375"100 DEG,FLH STL	83385	OBD
						- - - * - - -		
-99	426-1513-00			2		FRAME SECT,CAB.:TOP RIGHT	80009	426-1513-00
						(ATTACHING PARTS)		
-100	210-0457-00			2		NUT,PL,ASSEM WA:6-32 X 0.312 INCH,STL	83385	OBD
-101	211-0507-00			2		SCREW,MACHINE:6-32 X 0.312 INCH,PNH STL	83385	OBD
						- - - * - - -		
-102	----- -----			1		CKT BOARD ASSY:TRIGGER AMPLIFIER(SEE A13 REPL)		
-103	131-0608-00			6		. TERMINAL,PIN:0.365 L X 0.025 PH BRZ GOLD	22526	47357
-104	136-0252-07			77		. SOCKET,PIN CONN:W/O DIMPLE	22526	75060-012
-105	131-1003-00			5		. CONN,RCPT,ELEC:CKT BD MT,3 PRONG	80009	131-1003-00
-106	136-0269-02			2		. SKT,PL-IN ELEK:MICROCIRCUIT,14 DIP,LOW CLE	73803	CS9002-14
-107	136-0263-04			16		. SOCKET,PIN TERM:FOR 0.025 INCH SQUARE PIN	22526	75377-001
-108	----- -----			1		CKT BOARD ASSY:LOGIC(SEE A14 REPL)		
-109	214-0579-00			12		. TERM,TEST POINT:BRS CD PL	80009	214-0579-00
-110	136-0241-00			4		. SOCKET,PLUG-IN:10 CONTACT,ROUND	71785	133-99-12-064
-111	131-1003-00			4		. CONN,RCPT,ELEC:CKT BD MT,3 PRONG	80009	131-1003-00
-112	136-0252-07			52		. SOCKET,PIN CONN:W/O DIMPLE	22526	75060-012
-113	136-0260-02			4		. SKT,PL-IN ELEK:MICROCIRCUIT,16 DIP,LOW CLE	71785	133-51-92-008
-114	136-0263-04			46		. SOCKET,PIN TERM:FOR 0.025 INCH SQUARE PIN	22526	75377-001
-115	----- -----			1		CKT BOARD ASSY:HORIZ INTCON(SEE A10 REPL)		
						(ATTACHING PARTS)		
-116	211-0008-00			2		SCREW,MACHINE:4-40 X 0.25 INCH,PNH STL	83385	OBD
						- - - * - - -		
	----- -----			-		. CKT BOARD ASSY INCLUDES:		
-117	136-0263-04			8		. SOCKET,PIN TERM:FOR 0.025 INCH SQUARE PIN	22526	75377-001
-118	136-0252-07			4		. SOCKET,PIN CONN:W/O DIMPLE	22526	75060-012
-119	131-1003-00			4		. CONN,RCPT,ELEC:CKT BD MT,3 PRONG	80009	131-1003-00
-120	----- -----			1		CKT BOARD ASSY:HORIZ CH SW(SEE A9 REPL)		
						(ATTACHING PARTS)		
-121	211-0008-00			2		SCREW,MACHINE:4-40 X 0.25 INCH,PNH STL	83385	OBD
						- - - * - - -		
	----- -----			-		. CKT BOARD ASSY INCLUDES:		
-122	131-1003-00			6		. CONN,RCPT,ELEC:CKT BD MT,3 PRONG	80009	131-1003-00
-123	136-0252-07			6		. SOCKET,PIN CONN:W/O DIMPLE	22526	75060-012
-124	131-0589-00			2		. TERMINAL,PIN:0.46 L X 0.025 SQ	80009	131-0589-00
-125	136-0263-04			7		. SOCKET,PIN TERM:FOR 0.025 INCH SQUARE PIN	22526	75377-001
-126	136-0260-02			1		. SKT,PL-IN ELEK:MICROCIRCUIT,16 DIP,LOW CLE	71785	133-51-92-008
-127	200-0945-01			2		. COVER,HALF XSTR:DUAL TO-18,W/2-56 THD	80009	200-0945-01
						(ATTACHING PARTS)		
-128	211-0001-00			2		. SCREW,MACHINE:2-56 X 0.25 INCH,PNH STL	87308	OBD
						- - - * - - -		
-129	200-0945-00			2		. COVER,HALF XSTR:DUAL TO-18,ALUMINUM	80009	200-0945-00
-130	----- -----			1		CKT BOARD ASSY:MAIN INTERFACE(SEE A11 REPL)		
						(ATTACHING PARTS)		
-131	213-0119-00			12		SCR,TPG,THD FOR:4-24 X 0.375 INCH,PNH STL	83385	OBD
						- - - * - - -		

http://manoman.sqhill.com

Fig. & Index No.	Tektronix Part No.	Serial/Model No. Eff	Dscont	Qty	1 2 3 4 5	Name & Description	Mfr Code	Mfr Part Number
5-	----- -----			-		. CKT BOARD ASSY INCLUDES:		
	131-0767-12			2		. CONNECTOR,RCPT,:CKT BD,32/76 CONTACT	80009	131-0767-12
						(ATTACHING PARTS)		
-132	213-0232-00			4		. SCR,TPG,THD FOR:2-32 X 0.312 INCH,PNH STL	83385	OBD
						- - - * - - -		
	----- -----			-		. . CKT BOARD ASSY INCLUDES:		
-133	204-0365-02			4		. . BODY,CONNECTOR:PLUG-IN CIRCUIT CARD	80009	204-0365-02
-134	131-2158-01			128		. . CONTACT,ELEC:CKT BD CONNECTOR	80009	131-2158-01
	----- -----			-		. . (STRAIGHT OR OFFSET)		
-135	200-0950-00			4		. . COVER,ELEC CONN:PLASTIC	80009	200-0950-00
-136	----- -----			1		. CKT BOARD ASSY:DSPL FOLLOWER(SEE A34,A35 REPL)		
-137	136-0619-00			2		. SOCKET,PIN TERM:U/W 0.026-0.029 DIA PINS	00779	1-331677-0
-138	214-2675-00			2		. SPRING,CKT BD:	80009	214-2675-00
-139	129-0363-00			4		. POST,ELEC-MECH:HEX.,0.25 X 0.436 INCH LONG	80009	129-0363-00
						(ATTACHING PARTS)		
-140	211-0008-00			4		. SCREW,MACHINE:4-40 X 0.25 INCH,PNH STL	83385	OBD
						- - - * - - -		
	131-0767-07			1		. CONNECTOR,RCPT,:PLUG-IN CKT BD,70 CONTACT	80009	131-0767-07
						(ATTACHING PARTS)		
-141	213-0232-00			4		. SCR,TPG,THD FOR:2-32 X 0.312 INCH,PNH STL	83385	OBD
						- - - * - - -		
	----- -----			-		. . CONNECTOR ASSY INCLUDES:		
-142	204-0365-02			1		. . BODY,CONNECTOR:PLUG-IN CIRCUIT CARD	80009	204-0365-02
-143	200-0950-00			2		. . COVER,ELEC CONN:PLASTIC	80009	200-0950-00
-144	131-2158-01			64		. . CONTACT,ELEC:CKT BD CONNECTOR	80009	131-2158-01
	----- -----			-		. . (STRAIGHT OR OFFSET)		
-145	131-0804-00			3		. LINK,TERM.CONNE:J-SHAPE	80009	131-0804-00
-146	131-0592-00			15		. CONTACT,ELEC:0.885 INCH LONG	22526	47353
-147	131-0608-00			131		. TERMINAL,PIN:0.365 L X 0.025 PH BRZ GOLD	22526	47357
-148	386-1558-00			7		. SPACER,CKT BD:0.335 H,ACETAL	80009	386-1558-00
-149	214-1568-00			4		. PIN,GUIDE:0.119 DIA X 1.035 W/0.25 HEXCLR	80009	214-1568-00
						(ATTACHING PARTS)		
-150	210-0406-00			4		. NUT,PLAIN,HEX.:4-40 X 0.188 INCH,BRS	73743	2X12161-402
-151	210-0054-00			4		. WASHER,LOCK:SPLIT,0.118 ID X 0.212"OD STL	83385	OBD
						- - - * - - -		
-152	131-1003-00			10		. CONN,RCPT,ELEC:CKT BD MT,3 PRONG	80009	131-1003-00
-153	136-0252-07			10		. SOCKET,PIN CONN:W/O DIMPLE	22526	75060-012
-154	344-0147-00			4		. CLIP,SPR,TNSN:CIRCUIT CARD MOUNTING	80009	344-0147-00
-155	131-0591-00			62		. CONTACT,ELEC:0.835 INCH LONG	22526	47352
-156	426-1487-00			1		FRAME,PL-IN HSG:REAR	80009	426-1487-00
-157	179-2700-00			1		WIRING HARNESS:MODE SWITCH	80009	179-2700-00
-158	343-0549-00			25		. STRAP,TIEDOWN:0.091 W X 3.62 INCH LONG	59730	TY100
-159	214-2629-00			2		. PIN,ACTUATOR:	80009	214-2629-00
-160	131-0707-00			174		. CONNECTOR,TERM.:22-26 AWG,BRS& CU BE GOLD	22526	47439
-161	352-0162-00			2		. HLDR,TERM CONN:4 WIRE BLACK	80009	352-0162-00
	352-0162-03			2		. CONN BODY,PL,EL:4 WIRE ORANGE	80009	352-0162-03
	352-0162-04			4		. CONN BODY,PL,EL:4 WIRE YELLOW	80009	352-0162-04
-162	352-0163-09			2		. CONN BODY,PL,EL:5 WIRE WHITE	80009	352-0163-09
-163	352-0164-04			2		. CONN BODY,PL,EL:6 WIRE YELLOW	80009	352-0164-04
-164	352-0165-05			2		. CONN BODY,PL,EL:7 WIRE GREEN	80009	352-0165-05
	352-0165-07			2		. CONN BODY,PL,EL:7 WIRE VIOLET	80009	352-0165-07
-165	352-0166-08			2		. CONN BODY,PL,EL:8 WIRE GRAY	80009	352-0166-08
-166	352-0167-02			2		. CONN BODY,PL,EL:9 WIRE RED	80009	352-0167-02
	352-0167-03			2		. CONN BODY,PL,EL:9 WIRE ORANGE	80009	352-0167-03
	352-0167-09			2		. CONN BODY,PL,EL:9 WIRE WHITE	80009	352-0167-09
-167	352-0168-03			2		. CONN BODY,PL,EL:10 WIRE ORANGE	80009	352-0168-03
-168	175-0827-00			FT		. CABLE,SP,ELEC:4,26 AWG,STRD,PVC JKT,RBN	08261	SS04267(1061)0C
-169	175-0829-00			FT		. WIRE,ELECTRICAL:6 WIRE RIBBON	08261	SS-0626-710610C
-170	175-0830-00			FT		. WIRE,ELECTRICAL:7 WIRE RIBBON	08261	SS-0726-710610C
-171	175-0857-00			FT		. WIRE,ELECTRICAL:8 WIRE RIBBON	08261	SS-0822-7(1061)
-172	175-0832-00			FT		. WIRE,ELECTRICAL:9 WIRE RIBBON	08261	SS-0926(1061)0C
-173	175-0833-00			FT		. WIRE,ELECTRICAL:10 WIRE RIBBON	08261	SS-1026-7
	198-4185-00			1		WIRE SET,ELEC:	80009	198-4185-00
-174	131-0622-00			2		. CONTACT,ELEC:0.577"L,28-32 AWG WIRE	22526	46241
	131-0707-00			136		. CONNECTOR,TERM.:22-26 AWG,BRS& CU BE GOLD	22526	47439
	131-0792-00			2		. CONNECTOR,TERM:18-20 AWG,CU BE GOLD PL	22526	46221
	214-2629-00			2		. PIN,ACTUATOR:	80009	214-2629-00

http://manoman.sqhill.com

Fig. & Index No.	Tektronix Part No.	Serial/Model No. Eff	Dscont	Qty	1 2 3 4 5	Name & Description	Mfr Code	Mfr Part Number
5-175	352-0169-02			1		. CONN BODY,PL,EL:2 WIRE RED	80009	352-0169-00
	352-0169-04			1		. CONN BODY,PL,EL:2 WIRE YELLOW	80009	352-0169-04
	352-0169-05			1		. CONN BODY,PL,EL:2 WIRE GREEN	80009	352-0169-05
-176	352-0198-04			2		. HLDR,TERM CONN:2 WIRE YELLOW	80009	352-0198-04
	352-0163-05			4		. CONN BODY,PL,EL:5 WIRE GREEN	80009	352-0163-05
	352-0166-03			2		. CONN BODY,PL,EL:8 WIRE ORANGE	80009	352-0166-03
	352-0166-06			2		. CONN BODY,PL,EL:8 WIRE BLUE	80009	352-0166-06
	352-0168-00			2		. CONN BODY,PL,EL:10 WIRE BLACK	80009	352-0168-00
	352-0168-02			2		. CONN BODY,PL,EL:10 WIRE RED	80009	352-0168-02
	352-0168-06			2		. CONN BODY,PL,EL:10 WIRE BLUE	80009	352-0168-06
	352-0168-07			2		. CONN BODY,PL,EL:10 WIRE VIOLET	80009	352-0168-07
-177	175-0825-00			FT		. WIRE,ELECTRICAL:2 WIRE RIBBON	80009	175-0825-00
	175-0827-00			FT		. CABLE,SP,ELEC:4,26 AWG,STRD,PVC JKT,RBN	08261	SS04267(1061)0C
-178	175-0828-00			FT		. WIRE,ELECTRICAL:5 WIRE RIBBON	08261	SS-0526-710610C
	175-0831-00			FT		. WIRE,ELECTRICAL:8 WIRE RIBBON	08261	SS-0826-710610C
	175-0831-00			FT		. WIRE,ELECTRICAL:8 WIRE RIBBON	08261	SS-0826-710610C
	175-0833-00			FT		. WIRE,ELECTRICAL:10 WIRE RIBBON	08261	SS-1026-7
	175-0855-00			FT		. WIRE,ELECTRICAL:10 WIRE RIBBON	08261	SS-1022(1061)0C

http://manoman.sqhill.com

Fig. & Index No.	Tektronix Part No.	Serial/Model No. Eff	Dscont	Qty	1 2 3 4 5	Name & Description	Mfr Code	Mfr Part Number
6-	620-0283-00			1		POWER SUPPLY:LOW VOLTAGE	80009	620-0283-00
						(ATTACHING PARTS)		
-1	211-0578-00			4		SCREW,MACHINE:6-32 X 0.438 INCH,PNH STL	83385	OBD
						- - - * - - -		
	----- -----			-		. POWER SUPPLY INCLUDES:		
-2	200-1262-00			1		. COVER,POWER SUP:LEFT SIDE	80009	200-1262-00
						(ATTACHING PARTS)		
-3	211-0503-00			7		. SCREW,MACHINE:6-32 X 0.188 INCH,PNH STL	83385	OBD
-4	211-0504-00			2		. SCREW,MACHINE:6-32 X 0.25 INCH,PNH STL	83385	OBD
						- - - * - - -		
-5	255-0334-00			1		. PLASTIC CHANNEL:12.75 X 0.175X 0.155,NYL	11897	122-37-2500
-6	348-0233-00			1		. GROMMET,PLASTIC:GRAY,OVAL SHAPE,0.927 ID	80009	348-0233-00
-7	351-0279-00			2		. GUIDE,SHOE:5.18 X 0.375,NYLON	80009	351-0279-00
-8	200-1906-00			1		. COVER,PWR SPLY:BOTTOM AND FRONT	80009	200-1906-00
						(ATTACHING PARTS)		
-9	211-0503-00			5		. SCREW,MACHINE:6-32 X 0.188 INCH,PNH STL	83385	OBD
						- - - * - - -		
-10	200-1263-01			1		. COVER,PWR SPLY:RIGHT SIDE	80009	200-1263-01
						(ATTACHING PARTS)		
-11	211-0503-00			1		. SCREW,MACHINE:6-32 X 0.188 INCH,PNH STL	83385	OBD
-12	211-0504-00			2		. SCREW,MACHINE:6-32 X 0.25 INCH,PNH STL	83385	OBD
						- - - * - - -		
-13	----- -----			2		. TRANSISTOR:(SEE Q28,Q74 REPL)		
						(ATTACHING PARTS)		
-14	210-0406-00			1		. NUT,PLAIN,HEX.:4-40 X 0.188 INCH,BRS	73743	2X12161-402
-15	210-1178-00			1		. WSHR,SHOULDERED:FOR MTG TO-220 TRANSISTOR	49671	DF 137A
-16	211-0101-00			1		. SCREW,MACHINE:4-40 X 0.25,100 DEG,FLH STL	83385	OBD
						- - - * - - -		
-17	----- -----			2		. TRANSISTOR:(SEE Q58,Q94 REPL)		
						(ATTACHING PARTS)		
-18	210-0406-00			1		. NUT,PLAIN,HEX.:4-40 X 0.188 INCH,BRS	73743	2X12161-402
-19	210-1178-00			1		. WSHR,SHOULDERED:FOR MTG TO-220 TRANSISTOR	49671	DF 137A
-20	211-0101-00			1		. SCREW,MACHINE:4-40 X 0.25,100 DEG,FLH STL	83385	OBD
						- - - * - - -		
-21	342-0202-00			2		. INSULATOR,PLATE:TRANSISTOR	01295	10-21-023-106
-22	----- -----			1		. TRANSISTOR:(SEE Q122 REPL)		
						(ATTACHING PARTS)		
-23	210-0406-00			1		. NUT,PLAIN,HEX.:4-40 X 0.188 INCH,BRS	73743	2X12161-402
-24	210-1178-00			1		. WSHR,SHOULDERED:FOR MTG TO-220 TRANSISTOR	49671	DF 137A
-25	211-0038-00			1		. SCREW,MACHINE:4-40 X 0.312,FLH,100 DEG	83385	OBD
						- - - * - - -		
-26	----- -----			1		. TRANSISTOR:(SEE Q126 REPL)		
						(ATTACHING PARTS)		
-27	210-0406-00			1		. NUT,PLAIN,HEX.:4-40 X 0.188 INCH,BRS	73743	2X12161-402
-28	210-1178-00			1		. WSHR,SHOULDERED:FOR MTG TO-220 TRANSISTOR	49671	DF 137A
-29	211-0101-00			1		. SCREW,MACHINE:4-40 X 0.25,100 DEG,FLH STL	83385	OBD
						- - - * - - -		
-30	342-0202-00			2		. INSULATOR,PLATE:TRANSISTOR	01295	10-21-023-106
-31	----- -----			1		. CKT BOARD ASSY:LV REGULATOR(SEE A22 REPL)		
						(ATTACHING PARTS)		
-32	211-0008-00			5		. SCREW,MACHINE:4-40 X 0.25 INCH,PNH STL	83385	OBD
						- - - * - - -		
	----- -----			-		. . CKT BOARD ASSY INCLUDES:		
-33	131-0608-00			69		. . TERMINAL,PIN:0.365 L X 0.025 PH BRZ GOLD	22526	47357
-34	214-0579-00			6		. . TERM,TEST POINT:BRS CD PL	80009	214-0579-00
-35	136-0252-07			24		. . SOCKET,PIN CONN:W/O DIMPLE	22526	75060-012
-36	136-0514-00			5		. . SKT,PL-IN ELEC:MICROCIRCUIT,8 DIP	73803	CS9002-8
-37	131-0993-00			1		. . BUS,CONDUCTOR:2 WIRE BLACK	00779	530153-2
-38	----- -----			1		. . TRANSISTOR:(SEE Q148 REPL)		
						(ATTACHING PARTS)		
-39	210-0551-00			1		. . NUT,PLAIN,HEX.:4-40 X 0.25 INCH,STL	83385	OBD
-40	211-0097-00			1		. . SCREW,MACHINE:4-40 X 0.312 INCH,PNH STL	83385	OBD
-41	210-1178-00			1		. . WSHR,SHOULDERED:FOR MTG TO-220 TRANSISTOR	49671	DF 137A
						- - - * - - -		

http://manoman.sqhill.com

Fig. & Index No.	Tektronix Part No.	Serial/Model No. Eff	Dscont	Qty	1 2 3 4 5	Name & Description	Mfr Code	Mfr Part Number
6-42	348-0023-00			1		. PLUG,HOLE:	02768	207090201000101
-43	441-1490-00			1		. CHASSIS,SCOPE:CIRCUIT BOARD	80009	441-1490-00
						(ATTACHING PARTS)		
-44	211-0008-00			2		. SCREW,MACHINE:4-40 X 0.25 INCH,PNH STL	83385	OBD
-45	211-0507-00			3		. SCREW,MACHINE:6-32 X 0.312 INCH,PNH STL	83385	OBD
						- - - * - - -		
-46	----- -----			1		. CAPACITOR:(SEE C154 REPL)		
						(ATTACHING PARTS)		
-47	212-0518-00			2		. SCREW,MACHINE:10-32 X 0.312 INCH,PNH STL	83385	OBD
						- - - * - - -		
-48	----- -----			1		. DELAY LINE,ELEC(SEE A24 REPL)		
						(ATTACHING PARTS)		
-49	211-0008-00			3		. SCREW,MACHINE:4-40 X 0.25 INCH,PNH STL	83385	OBD
-50	211-0504-00			1		. SCREW,MACHINE:6-32 X 0.25 INCH,PNH STL	83385	OBD
						- - - * - - -		
	----- -----			-		. . CKT BOARD ASSY INCLUDES:		
-51	131-0608-00			22		. . TERMINAL,PIN:0.365 L X 0.025 PH BRZ GOLD	22526	47357
-52	136-0252-07			6		. . SOCKET,PIN CONN:W/O DIMPLE	22526	75060-012
-53	136-0260-02			1		. . SKT,PL-IN ELEK:MICROCIRCUIT,16 DIP,LOW CLE	71785	133-51-92-008
-54	136-0263-04			6		. . SOCKET,PIN TERM:FOR 0.025 INCH SQUARE PIN	22526	75377-001
-55	----- -----			4		. . SEMICOND DEVICE:(SEE CR140,CR141,CR142		
	----- -----			-		. . AND CR143 REPL)		
						(ATTACHING PARTS)		
-56	210-0410-00			4		. . NUT,PLAIN,HEX.:10-32 X 0.312 INCH,BRS	73743	2X20003-402
-57	210-0056-00			4		. . WASHER,LOCK:SPLIT,0.195 ID X 0.32" OD,P BRZ	83385	OBD
-58	210-1003-00			4		. . WASHER,FLAT:# 10 X 0.036 THICK,BRS	12327	OBD
						- - - * - - -		
-59	386-1559-00			2		. . SPACER,CKT BD:0.47 H,ACETAL	80009	386-1559-00
-60	214-0579-00			2		. . TERM,TEST POINT:BRS CD PL	80009	214-0579-00
-61	131-0589-00			4		. . TERMINAL,PIN:0.46 L X 0.025 SQ	80009	131-0589-00
-62	----- -----			1		. . SEMICOND DEVICE:(SEE CR151 REPL)		
						(ATTACHING PARTS)		
-63	210-0586-00			2		. . NUT,PL,ASSEM WA:4-40 X 0.25,STL CD PL	83385	OBD
-64	211-0012-00			2		. . SCREW,MACHINE:4-40 X 0.375,PNH STL CD PL	83385	OBD
						- - - * - - -		
-65	386-0786-00			1		. . INSULATOR,PLATE:XSTR,MICA	80009	386-0786-00
-66	214-2731-00			1		. . HEAT SINK,DIODE:TO-3,AL	80009	214-2731-00
-67	136-0254-01			2		. . SOCKET,PIN TERM:U/W 0.031 TO 0.04 DIA PINS	00779	1-331892-8
-68	----- -----			2		. CAPACITOR:(SEE C16,C17 REPL)		
						(ATTACHING PARTS)		
-69	212-0518-00	B010100	B010569	8		. SCREW,MACHINE:10-32 X 0.312 INCH,PNH STL	83385	OBD
	212-0518-00	B010570		4		. SCREW,MACHINE:10-32 X 0.312 INCH,PNH STL	83385	OBD
	212-0651-00	XB010570		4		. SCREW MACHINE:10-32 X 0.312INCH,PNH,NYLON	26365	OBD
	210-3057-00	XB010570		4		. WASHER,FLAT:0.170 ID X 0.375 OD	95987	NW8-3753
						- - - * - - -		
-70	342-0419-00			2		. INSULATOR,CAP.:	80009	342-0419-00
-71	407-2111-00			1		. BRACKET,CAP.:ALUMINUM	80009	407-2111-00
-72	342-0452-00			1		. INSULATOR,FILM:CIRCUIT BOARD,POLYMIDE	80009	342-0452-00
-73	----- -----			1		. TRANSFORMER:(SEE T110 REPL)		
						(ATTACHING PARTS)		
-74	211-0008-00			4		. SCREW,MACHINE:4-40 X 0.25 INCH,PNH STL	83385	OBD
						- - - * - - -		
-75	348-0023-00			1		. PLUG,HOLE:	02768	207090201000101
-76	441-1423-00			1		. CHASSIS,SCOPE:TRANSFORMER	80009	441-1423-00
						(ATTACHING PARTS)		
-77	211-0097-00			2		. SCREW,MACHINE:4-40 X 0.312 INCH,PNH STL	83385	OBD
						- - - * - - -		
-78	337-1490-01	B010100	B010124	1		. SHIELD,ELEC:LINE INVERTER,CKT CD BOTTOM	80009	337-1490-01
	337-1490-02	B010125		1		. SHIELD,ELEC:LINE INVERTER,CKT BD BOTTOM	80009	337-1490-02
						(ATTACHING PARTS)		
-79	211-0558-00			1		. SCREW,MACHINE:6-32 X 0.250 BDGH,NYL,SLOT	26365	921-1150-0014
-80	210-0055-00			1		. WASHER,LOCK:SPLIT,0.145 ID X 0.253 OD,STL	83385	OBD
-81	211-0040-00			1		. SCREW,MACHINE:4-40 X 0.25",BDGH PLSTC	26365	OBD
-82	210-0054-00			1		. WASHER,LOCK:SPLIT,0.118 ID X 0.212"OD STL	83385	OBD
						- - - * - - -		
-83	220-0623-00			1		. NUT,BLOCK:0.375 X 0.5 X0.448,(3)6-32	80009	220-0623-00
						(ATTACHING PARTS)		
-84	211-0504-00			1		. SCREW,MACHINE:6-32 X 0.25 INCH,PNH STL	83385	OBD
						- - - * - - -		

http://manoman.sqhill.com

Fig. & Index No.	Tektronix Part No.	Serial/Model No. Eff	Dscont	Qty	1 2 3 4 5	Name & Description	Mfr Code	Mfr Part Number
6-85	----- -----			1		. CKT BOARD ASSY:INVERTER(SEE A23 REPL)		
						(ATTACHING PARTS)		
-86	211-0008-00			4		. SCREW,MACHINE:4-40 X 0.25 INCH,PNH STL	83385	OBD
						- - - * - - -		
	----- -----			-		. . CKT BOARD ASSY INCLUDES:		
-87	131-0591-00			6		. . CONTACT,ELEC:0.835 INCH LONG	22526	47352
-88	214-1914-00			1		. . HEAT SINK,ELEC:	98978	PB1-ZCB
						(ATTACHING PARTS)		
-89	211-0012-00			1		. . SCREW,MACHINE:4-40 X 0.375,PNH STL CD PL	83385	OBD
-90	210-0406-00			1		. . NUT,PLAIN,HEX.:4-40 X 0.188 INCH,BRS	73743	2X12161-402
						- - - * - - -		
-91	361-0414-00			1		. . SPACER,DIODE:	80009	361-0414-00
-92	346-0032-00			1		. . STRAP,RETAINING:0.075 DIA X 4.0 L,MLD RBR	98159	2859-75-4
-93	214-0579-00			4		. . TERM,TEST POINT:BRS CD PL	80009	214-0579-00
-94	348-0005-00			1		. . GROMMET,RUBBER:0.50 INCH DIA	70485	230
-95	129-0323-00			1		. . POST,ELEC-MECH:HEX,0.25 X 1 INCH LONG	80009	129-0323-00
						(ATTACHING PARTS)		
-96	211-0097-00			1		. . SCREW,MACHINE:4-40 X 0.312 INCH,PNH STL	83385	OBD
						- - - * - - -		
-97	385-0016-00			1		. . SPACER,POST:1.0 L W/6-32 THD THRU,NYLON	80009	385-0016-00
						(ATTACHING PARTS)		
-98	211-0507-00			1		. . SCREW,MACHINE:6-32 X 0.312 INCH,PNH STL	83385	OBD
						- - - * - - -		
-99	134-0158-00			4		. . BUTTON,PLUG:0.187 DIA,NYLON	02768	207-080501-00
-100	337-2533-00			1		. SHIELD,ELEC:LINE INVERT,TOP	80009	337-2533-00
						(ATTACHING PARTS)		
-101	211-0101-00			4		. SCREW,MACHINE:4-40 X 0.25,100 DEG,FLH STL	83385	OBD
						- - - * - - -		
-102	344-0118-00			2		. CLIP,SPG TENS:CAPACITOR MTG	80033	E50008-044
						(ATTACHING PARTS)		
-103	210-0586-00			2		. NUT,PL,ASSEM WA:4-40 X 0.25,STL CD PL	83385	OBD
-104	211-0008-00			2		. SCREW,MACHINE:4-40 X 0.25 INCH,PNH STL	83385	OBD
						- - - * - - -		
-105	----- -----			2		. TRANSISTOR:(SEE Q34,Q40 REPL)		
						(ATTACHING PARTS)		
-106	211-0034-00			2		. SCREW,MACHINE:2-56 X 0.50 INCH,PNH	83385	OBD
-107	210-0053-00			2		. WASHER,LOCK:INTL,0.092 ID X 0.175"OD,STL	83385	OBD
-108	210-1008-00			2		. WASHER,FLAT:0.09 ID X 0.188" OD,BRS	12360	OBD
-109	342-0421-00			2		. INSULATOR,BSHG:0.089 ID X 0.23 THK,NYLON	80009	342-0421-00
						- - - * - - -		
-110	342-0420-00			2		. INSULATOR,PLATE:TRANSISTOR,PORCELAIN	80009	342-0420-00
-111	342-0202-00			2		. INSULATOR,PLATE:TRANSISTOR	01295	10-21-023-106
-112	386-2634-00			1		. PL,CHOKE MTG:	80009	386-2634-00
						(ATTACHING PARTS)		
-113	211-0619-00			2		. SCREW,MACHINE:6-32 X 1.5 INCH,FLH STL	83385	OBD
						- - - * - - -		
-114	441-1420-00			1		. CHASSIS,SCOPE:LINE INVERT	80009	441-1420-00
						(ATTACHING PARTS)		
-115	213-0041-00			2		. SCR,TPG,THD CTG:6-32 X 0.375 INCH,TRH STL	83385	OBD
						- - - * - - -		
-116	342-0193-00			1		. INSULATOR,PLATE:	80009	342-0193-00
-117	342-0103-00			1		. INSULATOR,BLOCK:HEAT-SINK SHIELD,NYLON	80009	342-0103-00
						(ATTACHING PARTS)		
-118	210-0457-00			1		. NUT,PL,ASSEM WA:6-32 X 0.312 INCH,STL	83385	OBD
-119	211-0512-00			1		. SCREW,MACHINE:6-32 X 0.50" 100 DEG,FLH STL	83385	OBD
						- - - * - - -		
-120	214-1625-00			1		. SPRING,FLAT:2.0 INCH LONG,BOWED	80009	214-1625-00
	----- -----			1		. WIRE,SET,ELEC:		
-121	352-0169-00			2		. . HLDR,TERM CONN:2 WIRE BLACK	80009	352-0169-00
-122	352-0161-09			1		. . CONN BODY,PL,EL:3 WIRE WHITE	80009	352-0161-09
-123	352-0162-04			2		. . CONN BODY,PL,EL:4 WIRE YELLOW	80009	352-0162-04
-124	352-0163-08			2		. . CONN BODY,PL,EL:5 WIRE GRAY	80009	352-0163-08
-125	352-0164-02			2		. . CONN BODY,PL,EL:6 WIRE RED	80009	352-0164-02
-126	352-0165-00			2		. . CONN BODY,PL,EL:7 WIRE BLACK	80009	352-0165-00
-127	352-0200-00			2		. . HLDR,TERM CONN:4 WIRE BLACK	80009	352-0200-00
-128	210-0204-00			1		. . TERMINAL,LUG:0.146 INCH DIA DE,45 DEG BEND	78189	2157-06-01-2520N

http://manoman.sqhill.com

Fig. & Index No.	Tektronix Part No.	Serial/Model No. Eff	Dscont	Qty	1 2 3 4 5	Name & Description	Mfr Code	Mfr Part Number
6-129	210-0202-00			2		. . TERMINAL,LUG:0.146 ID,LOCKING,BRZ TINNED	78189	2104-06-00-2520N
-130	131-0707-00			51		. . CONNECTOR,TERM.:22-26 AWG,BRS& CU BE GOLD	22526	47439
-131	131-0622-00			4		. . CONTACT,ELEC:0.577"L,28-32 AWG WIRE	22526	46241
	131-0792-00			4		. . CONNECTOR,TERM:18-20 AWG,CU BE GOLD PL	22526	46221
-132	131-2065-00			4		. . TERM,QIK DISC:18-22 AWG,BRASS TIN PLATED	00779	2-350799-2
-133	210-0307-00			2		. . TERMINAL,LUG:RING,INS,16-14 AWG,#8	09922	BA14E-8
-134	175-0825-00			FT		. . WIRE,ELECTRICAL:2 WIRE RIBBON	80009	175-0825-00
-135	175-0826-00			FT		. . WIRE,ELECTRICAL:3 WIRE RIBBON	80009	175-0826-00
-136	175-0827-00			FT		. . CABLE,SP,ELEC:4,26 AWG,STRD,PVC JKT,RBN	08261	SS04267(1061)0C
-137	175-0860-00			FT		. . WIRE,ELECTRICAL:5 WIRE RIBBON	08261	SS-0522-7(1061)
-138	175-0859-00			FT		. . WIRE,ELECTRICAL:6 WIRE RIBBON	08261	SS-0622-7(1061)
-139	175-0858-00			FT		. . WIRE,ELECTRICAL:7 WIRE RIBBON	08261	SS-0722-7(1061)
-140	175-1091-00			FT		. . CABLE,SP,ELEC:(4) #18 STRANDED WIRE	80009	175-1091-00
-141	334-3379-01			1		. MARKER,IDENT:MARKED GROUNDSYMBOL	80009	334-3379-01
-142	----- -----			1		. SWITCH,SLIDE:(SEE S91 REPL)		
						(ATTACHING PARTS)		
-143	210-0586-00			2		. NUT,PL,ASSEM WA:4-40 X 0.25,STL CD PL	83385	OBD
-144	211-0097-00			2		. SCREW,MACHINE:4-40 X 0.312 INCH,PNH STL	83385	OBD
						- - - * - - -		
-145	210-0204-00			1		. TERMINAL,LUG:0.146 INCH DIA DE,45 DEG BEND	78189	2157-06-01-2520N
						(ATTACHING PARTS)		
-146	210-0457-00			1		. NUT,PL,ASSEM WA:6-32 X 0.312 INCH,STL	83385	OBD
						- - - * - - -		
-147	210-0202-00			1		. TERMINAL,LUG:0.146 ID,LOCKING,BRZ TINNED	78189	2104-06-00-2520N
						(ATTACHING PARTS)		
-148	210-0457-00			1		. NUT,PL,ASSEM WA:6-32 X 0.312 INCH,STL	83385	OBD
						- - - * - - -		
-149	----- -----			1		. SWITCH,SLIDE:(SEE S12 REPL)		
						(ATTACHING PARTS)		
-150	210-0586-00			2		. NUT,PL,ASSEM WA:4-40 X 0.25,STL CD PL	83385	OBD
-151	211-0097-00			2		. SCREW,MACHINE:4-40 X 0.312 INCH,PNH STL	83385	OBD
						- - - * - - -		
-152	200-2264-00			1		. CAP.,FUSEHOLDER:3AG FUSES	S3629	FEK 031 1666
-153	204-0832-00			1		. BODY,FUSEHOLDER:3AG,5 X 20MM FUSES	S3629	031.1673(MDLFEU)
-154	210-1039-00			1		. WASHER,LOCK:INT,0.521 ID X 0.625 INCH OD	24931	OBD
-155	----- -----			1		. FILTER,RFI:(SEE FL10 REPL)		
						(ATTACHING PARTS)		
-156	210-0586-00			2		. NUT,PL,ASSEM WA:4-40 X 0.25,STL CD PL	83385	OBD
-157	211-0014-00			2		. SCREW,MACHINE:4-40 X 0.50 INCH,PNH STL	83385	OBD
						- - - * - - -		
-158	214-2932-00			1		. HINK SINK,ELEC:POWER SUPPLY	80009	214-2932-00
-159	----- -----			1		CKT BOARD ASSY:VERT CHANNEL SW(SEE A19 REPL)		
						(ATTACHING PARTS)		
-160	211-0116-00			4		SCR,ASSEM WSHR:4-40 X 0.312 INCH,PNH BRS	83385	OBD
						- - - * - - -		
	----- -----			-		. CKT BOARD ASSY INCLUDES:		
-161	136-0514-00			4		. SKT,PL-IN ELEC:MICROCIRCUIT,8 DIP	73803	CS9002-8
-162	131-0608-00			8		. TERMINAL,PIN:0.365 L X 0.025 PH BRZ GOLD	22526	47357
-163	426-1352-00			1		. FRAME,MICROCKT:1.75 CM,STEPPED	80009	426-1352-00
						(ATTACHING PARTS)		
-164	211-0259-00			2		. SCR,ASSEM WSHR:2-56 X 0.437,PNH,STL CD PL	78189	OBD
-165	211-0260-00			2		. SCR,ASSEM WSHR:2-56 X 0.6875L,PNH,STL CD	78189	OBD
						- - - * - - -		
-166	131-1968-01			1		. CONT SET,ELEC:MICROCKT,1.75CM,RUBBER	80009	131-1968-01
-167	136-0183-00			2		. SOCKET,PLUG-IN:3 PIN,ROUND	80009	136-0183-00
-168	131-1003-00			8		. CONN,RCPT,ELEC:CKT BD MT,3 PRONG	80009	131-1003-00
-169	214-1292-00			2		. HEAT SINK,ELEC:TRANSISTOR	05820	205-AB
-170	136-0252-07			8		. SOCKET,PIN CONN:W/O DIMPLE	22526	75060-012
-171	214-2823-00			1		. HEAT SINK,ELEC:VERTICAL CHANNEL SW	80009	214-2823-00
-172	333-2320-00			1		PANEL,REAR:	80009	333-2320-00
						(ATTACHING PARTS)		
-173	211-0507-00			2		SCREW,MACHINE:6-32 X 0.312 INCH,PNH STL	83385	OBD
-174	211-0008-00			2		SCREW,MACHINE:4-40 X 0.25 INCH,PNH STL	83385	OBD
						- - - * - - -		

http://manoman.sghill.com

Fig. & Index No.	Tektronix Part No.	Serial/Model No. Eff	Dscont	Qty	1 2 3 4 5	Name & Description	Mfr Code	Mfr Part Number
6-175	441-1378-00	B010100	B010499	1		CHASSIS,CHAN SW:	80009	441-1378-00
	441-1378-01	B010500		1		CHASSIS,CHAN SW:	80009	441-1378-01
-176	----- -----			1		CKT BOARD ASSY:SIGNAL OUTPUT(SEE A15 REPL)		
						(ATTACHING PARTS)		
-177	211-0507-00			2		SCREW,MACHINE:6-32 X 0.312 INCH,PNH STL	83385	OBD
						- - - * - - -		
	----- -----			-		. CKT BOARD ASSY INCLUDES:		
-178	131-0608-00			5		. TERMINAL,PIN:0.365 L X 0.025 PH BRZ GOLD	22526	47357
-179	136-0252-07			5		. SOCKET,PIN CONN:W/O DIMPLE	22526	75060-012
-180	131-1003-00			5		. CONN,RCPT,ELEC:CKT BD MT,3 PRONG	80009	131-1003-00
-181	131-0955-01			3		. CONN,RCPT,ELEC:BNC,FEMALE,MODIFIED	80009	131-0955-01
-182	131-1315-01			2		. CONN,RCPT,ELEC:BNC,FEMALE	24931	28JR 306-1
						(ATTACHING PARTS)		
-183	220-0551-00			2		. NUT,PLAIN,HEX.:9 MM X 0.437 INCH	73743	OBD
						- - - * - - -		
-184	210-0012-00			5		. WASHER,LOCK:INTL,0.375 ID X 0.50" OD STL	78189	1220-02-00-0541C
-185	333-2440-00			1		. PANEL,REAR:SIGNALS OUT	80009	333-2440-00
-186	441-1424-00			1		. CHASSIS,SCOPE:SIGNAL OUT	80009	441-1424-00
						(ATTACHING PARTS)		
-187	211-0008-00			3		. SCREW,MACHINE:4-40 X 0.25 INCH,PNH STL	83385	OBD
						- - - * - - -		
-188	426-0807-02			1		FRAME PNL,CAB.:REAR	80009	426-0807-02
						(ATTACHING PARTS)		
-189	213-0270-00			4		SCR,TPG,THD FOR:10-32 X 0.75 INCH FILH STL	83385	OBD
						- - - * - - -		

http://manoman.sqhill.com

Fig. & Index No.	Tektronix Part No.	Serial/Model No. Eff	Dscont	Qty	1 2 3 4 5	Name & Description	Mfr Code	Mfr Part Number
	119-1369-00			1		WAVEFORM CALC:	80009	119-1369-00
7-1	200-2280-01			1		. COVER,SIDE:RIGHT	80009	200-2280-01
						(ATTACHING PARTS)		
-2	213-0870-00			2		. SCREW,TPG,TR:6-32 X 0.75"100 DEG,FLH STL	93907	OBD
						- - - * - - -		
-3	200-2281-01			1		. COVER,SIDE:LEFT	80009	200-2281-01
						(ATTACHING PARTS)		
-4	213-0870-00			2		. SCREW,TPG,TR:6-32 X 0.75"100 DEG,FLH STL	93907	OBD
						- - - * - - -		
-5	348-0571-00			4		. FOOT,KEYBOARD:GRAY	80009	348-0571-00
-6	----- -----			1		. CKT BOARD ASSY:ELECTRONICS(SEE A36 REPL)		
						(ATTACHING PARTS)		
-7	211-0008-00			2		. SCREW,MACHINE:4-40 X 0.25 INCH,PNH STL	83385	OBD
						- - - * - - -		
	----- -----			-		. . CKT BOARD ASSY INCLUDES:		
-8	136-0263-04			24		. . SOCKET,PIN TERM:FOR 0.025 INCH SQUARE PIN	22526	75377-001
-9	131-0608-00			26		. . TERMINAL,PIN:0.365 L X 0.025 PH BRZ GOLD	22526	47357
	195-0956-00			1		. LEAD,ELECTRICAL:3.0 INCH LONG	80009	195-0956-00
						(ATTACHING PARTS)		
-10	210-0457-00			2		. NUT,PL,ASSEM WA:6-32 X 0.312 INCH,STL	83385	OBD
-11	211-0538-00			1		. SCREW,MACHINE:6-32 X 0.312"100 DEG,FLH STL	83385	OBD
						- - - * - - -		
	----- -----			-		. . WIRE SET INCLUDES:		
-12	210-0206-00			2		. . TERMINAL,LUG:SE #10	86928	A373-147-1
-13	253-0192-00			FT		. TAPE,PRESS SENS:POLYSPONGE 0.375 X 0.062	80009	253-0192-00
-14	----- -----			1		. CKT BOARD ASSY:BUTTON(SEE A37 REPL)		
-15	386-4050-00			1		. . PANEL,CALC:	80009	386-4050-00
						(ATTACHING PARTS)		
-16	210-0406-00			9		. . NUT,PLAIN,HEX.:4-40 X 0.188 INCH,BRS	73743	2X12161-402
						- - - * - - -		
-17	210-1304-00			11		. . SPACER,SLEEVE:0.112 ID X 0.18 OD X 0.2 THK	80009	210-1304-00
-18	200-2346-00			1		. . COVER,CKT BOARD:POLYETHYLENE	80009	300-2346-00
-19	131-0590-00			24		. . CONTACT,ELEC:0.71 INCH LONG	22526	47351
-20	129-0285-00			2		. . POST,ELEC-MECH:0.281 L X 0.188 HEX BRS	80009	129-0285-00
-21	366-1770-00			11		. . PUSH BUTTON:GY,0.225 X 0.4 X 0.17	000FU	OBD
	366-1783-00			1		. . PUSH BUTTON:0.4 X 0.225 X 0.21,BLUE	000FU	OBD
	366-1784-00			5		. . PUSH BUTTON:GRAY,0.4 X 0.225 X 0.21	000FU	OBD
	366-1784-01			1		. . PUSH BUTTON:GRAY,1	000FU	OBD
	366-1784-02			1		. . PUSH BUTTON:GRAY,2	000FU	OBD
	366-1784-03			1		. . PUSH BUTTON:GRAY,3	000FU	OBD
	366-1784-04			1		. . PUSH BUTTON:GRAY,4	000FU	OBD
	366-1784-05			1		. . PUSH BUTTON:GRAY,5	000FU	OBD
	366-1784-06			1		. . PUSH BUTTON:GRAY,6	000FU	OBD
	366-1784-07			1		. . PUSH BUTTON:GRAY,7	000FU	OBD
	366-1784-08			1		. . PUSH BUTTON:GRAY,8	000FU	OBD
	366-1784-09			1		. . PUSH BUTTON:GRAY,9	000FU	OBD
	366-1784-10			1		. . PUSH BUTTON:GRAY,0	000FU	OBD
	366-1784-12			1		. . PUSH BUTTON:GRAY,CHS	000FU	OBD
	366-1784-13			1		. . PUSH BUTTON:GRAY,EEX	000FU	OBD
	366-1784-14			1		. . PUSH BUTTON:GRAY,.	000FU	OBD
	366-1784-15			1		. . PUSH BUTTON:GRAY,+	000FU	OBD
	366-1784-16			1		. . PUSH BUTTON:GRAY,-	000FU	OBD
	366-1784-17			1		. . PUSH BUTTON:GRAY,*	000FU	OBD
	366-1784-18			1		. . PUSH BUTTON:GRAY,/	000FU	OBD
-22	352-0553-00			80		. . HOLDER,PB:NATURAL PLASTIC	80009	352-0553-00
-23	105-0814-00			80		. . ACTUATOR,SWITCH:	80009	105-0814-00
-24	352-0478-00			1		. HLDR,TERM CONN:26 WIRE,DBL ROW BLACK	22526	65043-091
-25	012-0821-00			1		. CABLE,INTCON:72.0 INCH LONG	80009	012-0821-00
						(ATTACHING PARTS)		
-26	210-0457-00			1		. NUT,PL,ASSEM WA:6-32 X 0.312 INCH,STL	83385	OBD
-27	210-0006-00			2		. WASHER,LOCK:#6 INTL,0.018THK,STL CD PL	78189	1206-00-00-0541
						- - - * - - -		
-28	358-0025-00			1		. BSHG,STRAIN RLF:	28520	SR-6P-4
-29	426-1578-00			1		. FRAME SECT,CALC:	80009	426-1578-00

http://manoman.sqhill.com

Fig. & Index No.	Tektronix Part No.	Serial/Model No. Eff	Dscont	Qty	1 2 3 4 5	Name & Description	Mfr Code	Mfr Part Number
						OPTION 0D		
8-1	386-4232-00			1		PLATE,CONN MTG:W/O GPIB	80009	386-4232-00
						OPTION 02		
-2	----- -----			1		CKT BOARD ASSY:X-Y COMP(SEE A33 REPL)		
						(ATTACHING PARTS)		
-3	211-0008-00			2		SCREW,MACHINE:4-40 X 0.25 INCH,PNH STL	83385	OBD
						- - - * - - -		
	----- -----			-		. CKT BOARD ASSY INCLUDES:		
-4	136-0263-04			8		. SOCKET,PIN TERM:FOR 0.025 INCH SQUARE PIN	22526	75377-001
-5	131-1003-00			4		. CONN,RCPT,ELEC:CKT BD MT,3 PRONG	80009	131-1003-00
-6	136-0252-04			20		. SOCKET,PIN TERM:U/W 0.016-0.018 DIA PINS	22526	75060-007
						OPTION 02D		
-7	----- -----			1		CKT BOARD ASSY:4K RAM(SEE A28 REPL)		
-8	214-1337-00			2		. PIN,SPRING:0.10 OD X 0.25 INCH L,STL	80009	214-1337-00
-9	105-0160-00			2		. EJECTOR,CKT BD:WHITE PLASTIC	80009	105-0160-00
-10	131-0608-00			12		. TERMINAL,PIN:0.365 L X 0.025 PH BRZ GOLD	22526	47357
-11	----- -----			2		. TRANSISTOR:(SEE Q760,Q860 REPL)		
						(ATTACHING PARTS)		
-12	210-0586-00			2		. NUT,PL,ASSEM WA:4-40 X 0.25,STL CD PL	83385	OBD
-13	211-0008-00			2		. SCREW,MACHINE:4-40 X 0.25 INCH,PNH STL	83385	OBD
						- - - * - - -		

http://manoman.sqhill.com

Fig. & Index No.	Tektronix Part No.	Serial/Model No. Eff	Dscont	Qty	1 2 3 4 5	Name & Description	Mfr Code	Mfr Part Number
9-1	378-0603-00			1		FILTER,MESH:EMI	80009	378-0603-00
-2	390-0696-00			1		CAB.SIDE,SCOPE:LEFT,EMI	80009	390-0696-00
-3	348-0332-00			2		. SHLD,GSKT,ELEC:4.285 INCH LONG	80009	348-0332-00
-4	348-0333-00			4		. SHLD,GSKT,ELEC:4.8 INCH LONG	80009	348-0333-00
-5	214-0603-02			4		. PIN ASSY,SECRG:	80009	214-0603-02
-6	386-1634-00			4		. PLATE,LCH INDEX:ACETAL	80009	386-1634-00
-7	386-1633-00			4		. PLATE,LCH LKG:STEEL,CD PL	80009	386-1633-00
-8	348-0336-00			4		. SHLD,GSKT,ELEC:9.625 INCH LONG	80009	348-0336-00
-9	390-0695-00			1		CAB.SIDE,SCOPE:RIGHT,EMI	80009	390-0695-00
-10	348-0332-00			2		. SHLD,GSKT,ELEC:4.285 INCH LONG	80009	348-0332-00
-11	348-0333-00			4		. SHLD,GSKT,ELEC:4.8 INCH LONG	80009	348-0333-00
-12	348-0336-00			4		. SHLD,GSKT,ELEC:9.625 INCH LONG	80009	348-0336-00
-13	214-0603-02			4		. PIN ASSY,SECRG:	80009	214-0603-02
-14	386-1634-00			4		. PLATE,LCH INDEX:ACETAL	80009	386-1634-00
-15	386-1633-00			4		. PLATE,LCH LKG:STEEL,CD PL	80009	386-1633-00
-16	390-0554-00			1		CABINET,BOTTOM:	80009	390-0554-00
-17	348-0274-00			2		. SHLD GSKT,ELEK:FINGER TYPE,24.0 L	30817	97-555CDC
-18	214-0603-02			6		. PIN ASSY,SECRG:	80009	214-0603-02
-19	386-1634-00			6		. PLATE,LCH INDEX:ACETAL	80009	386-1634-00
-20	386-1633-00			6		. PLATE,LCH LKG:STEEL,CD PL	80009	386-1633-00
-21	348-0335-00			2		. SHLD,GSKT,ELEC:8.65 INCH LONG	80009	348-0335-00
-22	348-0334-00			2		. SHLD,GSKT,ELEC:7.64 INCH LONG	80009	348-0334-00

@NOV 1980

http://manoman.sghill.com

Tektronix
COMMITTED TO EXCELLENCE

MANUAL CHANGE INFORMATION

Date: 9-11-81 Change Reference: M42165

Product: 7854 OSCILLOSCOPE SERVICE Manual Part No.: 070-2874-01

DESCRIPTION

EFF SN B031170

TEXT CHANGES

Page 2-42 Third paragraph

CHANGE TO READ:

Operation of the left Active Peaking circuit is identical to that described above for the right Active Peaking circuit. Transistor Q63, along with resistors R53, R55, R56 and R57; provide proper biasing of Q61 and Q62 with changes in temperature.

Page 4-68 Step E3, part n.

CHANGE TO READ:

n. ADJUST -- 1 ns timing with the HF Adj capacitor C32 and (for SN B031170 & up) HF Adj resistor R32 (located on Horizontal Amplifier Board A17) for one timemark per division over the center 8 divisions of the display (position as necessary).

Page 4-69 Step E3, part q.

CHANGE TO READ:

q. ADJUST -- If necessary, compromise the setting of the HF Adj capacitor, C32 and (for SN B031170 & up) HF Adj resistor R32, for optimum 1-ns and 500-ps timing.

REPLACEABLE ELECTRICAL PARTS LIST AND SCHEMATIC CHANGES

CHANGE TO:

A17	670-5833-01	CKT BOARD ASSY:HORIZONTAL OUTPUT
A17R32	311-0978-00	RES.,VAR,NONWW:250 OHM, 0.5W
A17R59	321-0275-00	RES.,FXD,FILM:7.15K OHM,1%,0.125W
A17R159	321-0264-00	RES.,FXD,FILM:5.49K OHM,1%,0.125W

REMOVE:

A17CR44	152-0141-02	SEMICOND DEVICE:SILICON,30V,150MA
A17CR45	152-0141-02	SEMICOND DEVICE:SILICON,30V,150MA
A17CR159	152-0141-02	SEMICOND DEVICE:SILICON,30V,150MA
A17CR160	152-0141-02	SEMICOND DEVICE:SILICON,30V,150MA
A17R44	315-0123-00	RES.,FXD,CMPSN:12K OHM,5%,0.25W

http://manoman.sqhill.com

DESCRIPTION

ADD:

A17Q63	151-0190-00	TRANSISTOR:SILICON,NPN,2N3904
A17R53	315-0751-00	RES.,FXD,CMPSN:750 OHM,5%,0.25W
A17R55	315-0332-00	RES.,FXD,CMPSN:3.3K OHM,5%,0.25W
A17R56	315-0822-00	RES.,FXD,CMPSN:8.2K OHM,5%,0.25W
A17R57	315-0911-00	RES.,FXD,CMPSN:910 OHM,5%,0.25W

DIAGRAM 11 HORIZONTAL AMPLIFIER - Partial

Heat sinks should be added to Q21, Q121, Q41 and Q141.

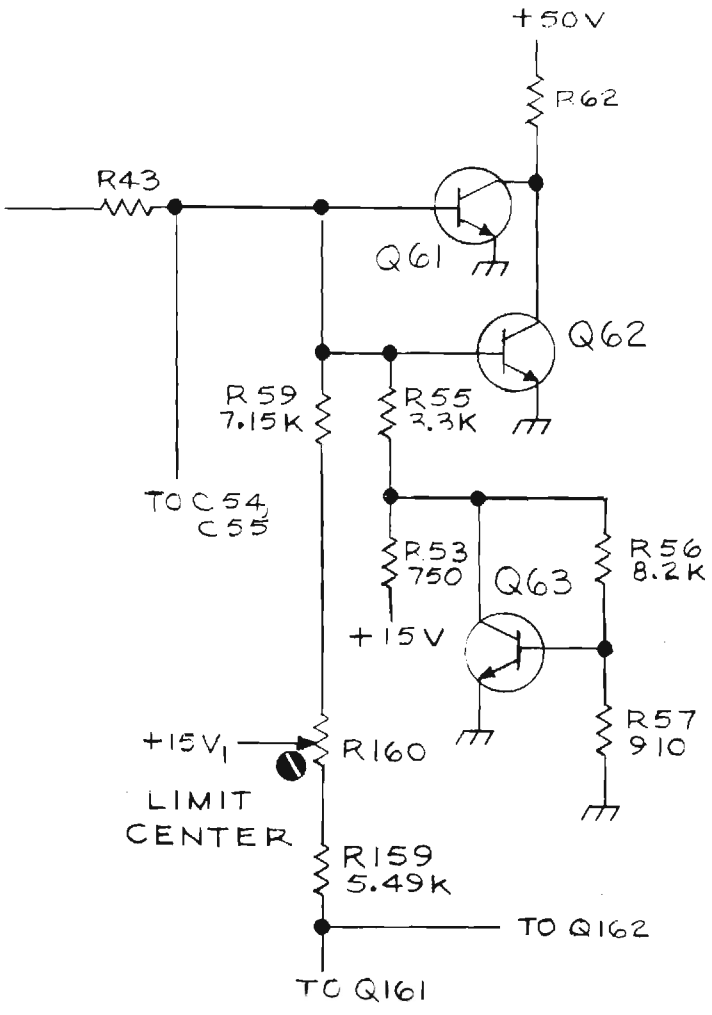

http://manoman.sqhill.com

Tektronix®
COMMITTED TO EXCELLENCE

MANUAL CHANGE INFORMATION

Date: 5-15-81 Change Reference: M43319 REV.

Product: 7854 OSCILLOSCOPE SERVICE Manual Part No.: 070-2874-01

DESCRIPTION

EFF SN B030690

REPLACEABLE ELECTRICAL PARTS LIST AND SCHMATIC CHANGES

ADD:

A27R1210 315-0472-00 RES.,FXD,CMPSN:4.7K OHM,5%,0.25W

DIAGRAM 28 Microprocessor and Control - Partial

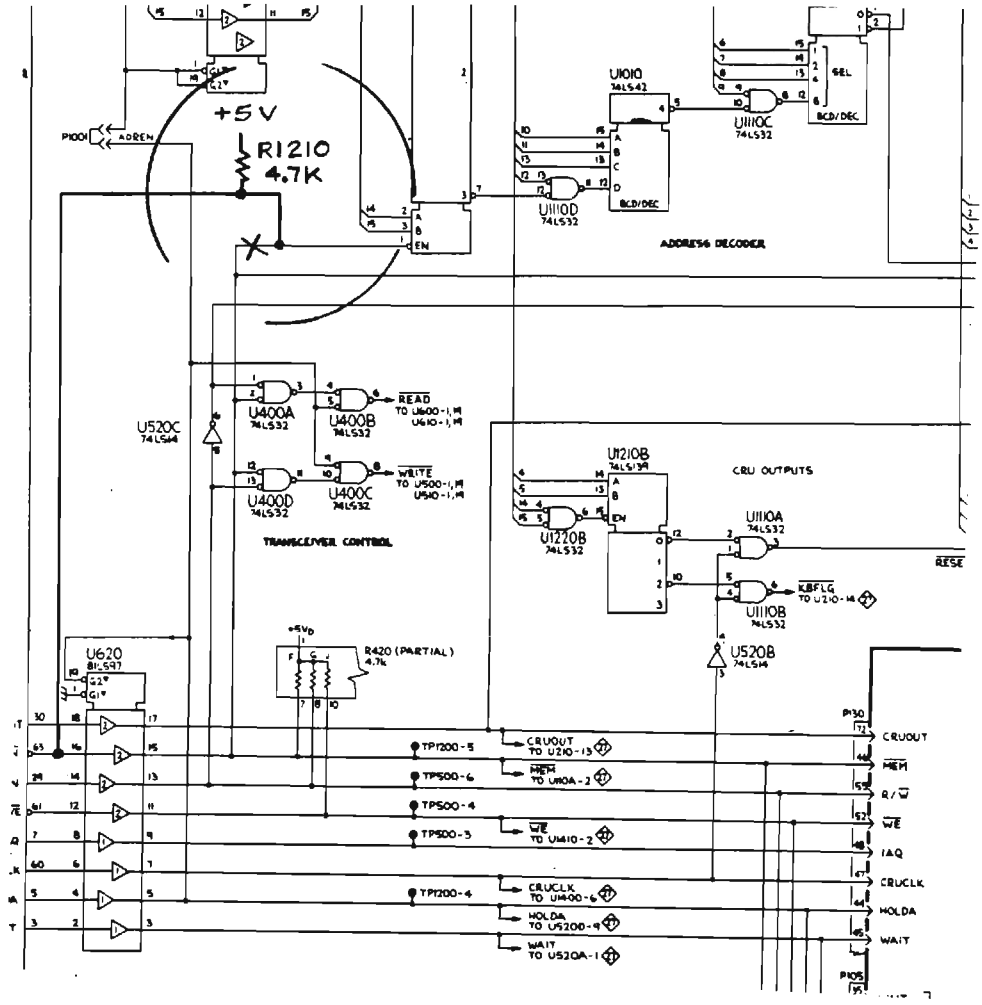

http://manoman.sqhill.com

Tektronix®
COMMITTED TO EXCELLENCE

MANUAL CHANGE INFORMATION

Date: 10-12-81 Change Reference: M43813

Product: 7854 OSCILLOSCOPE SERVICE Manual Part No.: 070-2874-01

DESCRIPTION

EFF SN B041395

REPLACEABLE ELECTRICAL PARTS LIST AND SCHEMATIC CHANGES

CHANGE TO:

A23	670-6259-01	CKT BOARD ASSY:P.S. INVERTER

ADD:

A23CR33	152-0400-00	SEMICOND DEVICE:SILICON,400V,1A
A23CR39	152-0400-00	SEMICOND DEVICE:SILICON,400V,1A

DIAGRAM 15 Converter/Rectifiers - Partial

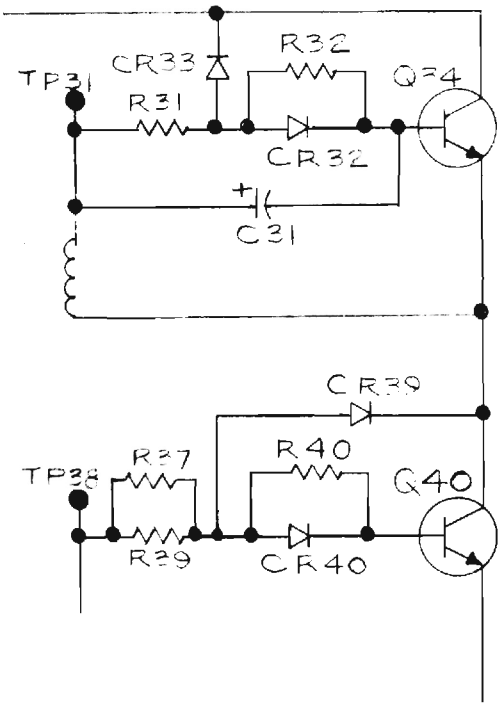

http://manoman.sghill.com

Tektronix®
COMMITTED TO EXCELLENCE

MANUAL CHANGE INFORMATION

Date: 8-18-81 Change Reference: M44153

Product: 7854 SERVICE Manual Part No.: 070-2874-01

DESCRIPTION

EFF SN B031000

REPLACEABLE ELECTRICAL PARTS AND SCHEMATIC CHANGES

CHANGE TO:

A26	670-5846-03	CKT BOARD ASSY:CONTROL LOGIC
A26C1330	281-0763-00	CAP.,FXD,CER DI:47PF,10%,100V

C1330 is located on the CONTROL LOGIC circuit board assembly and is shown on diagram 21 DIGITIZER CONTROL LOGIC.

http://manoman.sqmn.com

MANUAL CHANGE INFORMATION

Tektronix® COMMITTED TO EXCELLENCE

Date: 11-23-81 Change Reference: M44890

Product: 7854 Manual Part No.: 070-2874-01

DESCRIPTION

EFF SN B031285

REPLACEABLE ELECTRICAL PARTS AND SCHEMATIC CHANGES

CHANGE TO:

A18	670-5832-01	CKT BOARD ASSY:VERTICAL OUTPUT

REMOVE:

A18C12	283-0160-00	CAP.,FXD,CER DI:1.5PF,10%,50V
A18C32	283-0160-00	CAP.,FXD,CER DI:1.5PF,10%,50V
A18C147	283-0160-00	CAP.,FXD,CER DI:1.5PF,10%,50V
A18C177	283-0160-00	CAP.,FXD,CER DI:1.5PF,10%,50V
A18R12	317-0101-00	RES.,FXD,CMPSN:100 OHM,5%,0.125W
A18R32	317-0101-00	RES.,FXD,CMPSN:100 OHM,5%,0.125W
A18R147	317-0101-00	RES.,FXD,CMPSN:100 OHM,5%,0.125W
A18R177	317-0101-00	RES.,FXD,CMPSN:100 OHM,5%,0.125W

ADD:

A18C164	281-0526-00	CAP.,FXD,CER DI:1.5PF,+/0.5PF,500V
A18C165	281-0151-00	CAP.,VAR,CER DI:1-3PF,100V
A18R164	311-0978-00	RES.,VAR,NONWW:TRMR,250 OHM,0.5W

DIAGRAM 9 Vertical Amplifier - Partial

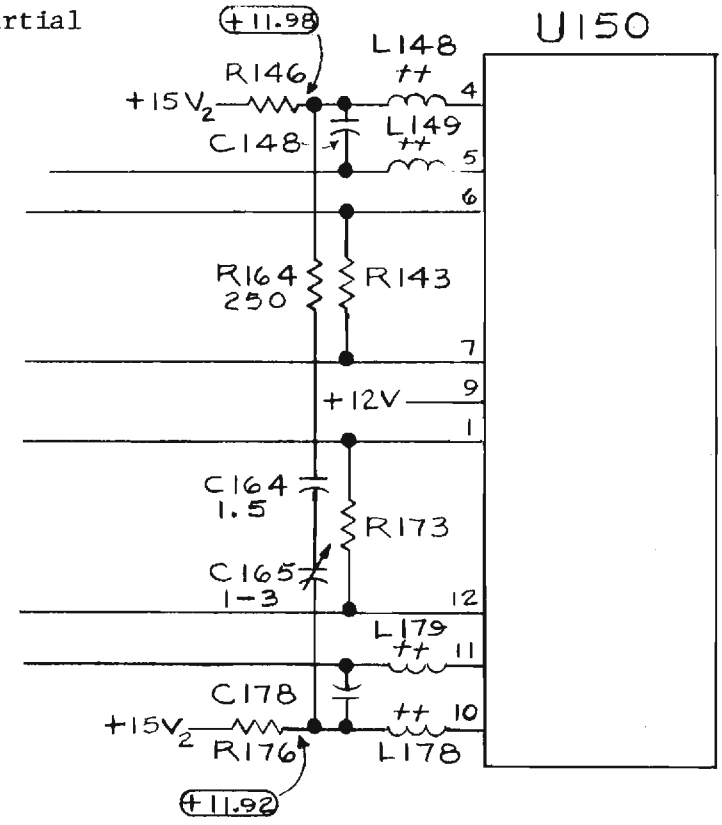

http://manuman.sqhill.com

Tektronix®
COMMITTED TO EXCELLENCE

MANUAL CHANGE INFORMATION

Date: 11-11-81 Change Reference: M44198

Product: 7854 EFF SN B041288 Manual Part No.: 070-2874-01

DESCRIPTION

REPLACEABLE ELECTRICAL PARTS AND SCHEMATIC CHANGES

CHANGE TO:

A25	670-5850-01	CKT BOARD ASSY:DIGITIZER
A25C60	283-0107-00	CAP.,FXD,CER DI:51PF,5%,200V
A25C561	281-0792-00	CAP.,FXD,CER DI:82PF,10%,100V
A25R21	321-1650-07	RES.,FXD,FILM:8.99K OHM,0.1%,0.125W
A25R22	321-0666-07	RES.,FXD,FILM:3.04K OHM,0.1%,0.125W
A25R71	321-0816-07	RES.,FXD,FILM:5K OHM,0.1%,0.125W
A25R72	315-0272-00	RES.,FXD,CMPSN:2.7K OHM,5%,0.25W
A25R73	321-1267-03	RES.,FXD,FILM:5.97K OHM,0.25%,0.125W
A25R77	321-1313-07	RES.,FXD,FILM:18K OHM,0.1%,0.125W
A25R79	321-0236-03	RES.,FXD,FILM:2.8K OHM,0.25%,0.125W
A25R80	311-0978-00	RES.,VAR,NONWW:TRMR,250 OHM,0.5W
A25R81	321-1296-07	RES.,FXD,FILM:12K OHM,0.1%,0.125W
A25R91	321-0657-07	RES.,FXD,FILM:60 OHM,0.1%,0.125W
A25R92	321-0239-07	RES.,FXD,FILM:3.01K OHM,0.1%,0.125W
A25R289	321-0269-00	RES.,FXD,FILM:6.19K OHM,1%,0.125W
A25R292	321-1618-02	RES.,FXD,FILM:6.5K OHM,0.5%,0.125W

REMOVE:

A15C84	281-0788-00	CAP.,FXD,CER DI:470PF,10%,100V
A25C87	283-0067-00	CAP.,FXD,CER DI:0.001UF,10%,200V
A25Q93	151-0190-05	TRANSISTOR:SILICON,NPN
A25Q94	151-0301-00	TRANSISTOR:SILICON,PNP
A25Q95	151-0301-00	TRANSISTOR:SILICON,PNP
A25R92	321-0274-00	RES.,FXD,FILM:6.98K OHM,1%,0.125W
A25R93	315-0622-00	RES.,FXD,CMPSN:6.2K OHM,5%,0.25W
A25R124	321-0218-00	RES.,FXD,FILM:1.82K OHM,1%,0.125W
A25R125	321-0138-00	RES.,FXD,FILM:267 OHM,1%,0.125W
A25R137	321-0133-00	RES.,FXD,FILM:237 OHM,1%,0.125W
A25R138	321-0189-00	RES.,FXD,FILM:909 OHM,1%,0.125W

ADD:

A25R89	321-0657-07	RES.,FXD,FILM:60 OHM,0.1%,0.125W
A25R90	321-0657-07	RES.,FXD,FILM:60 OHM,0.1%,0.125W
A25R123	315-0121-00	RES.,FXD,CMPSN:120 OHM,5%,0.25W
A25R136	321-0199-00	RES.,FXD,FILM:1.15K OHM,1%,0.125W

http://manoman.sqhill.com

DESCRIPTION

DIAGRAM 8 VERTICAL PICKOFF AMPLIFIER - Partial

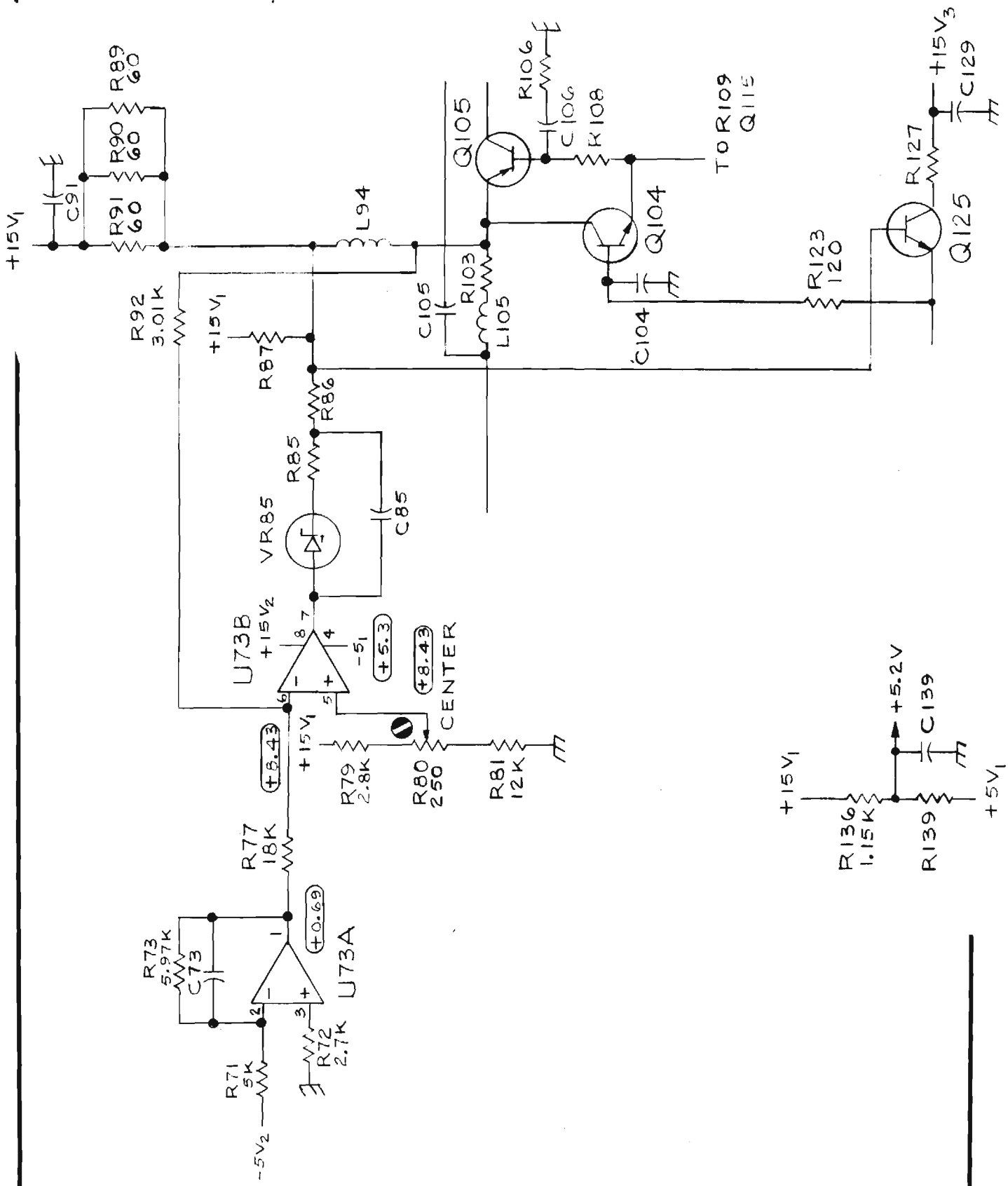

http://manoman.sqhill.com