http://manoman.sqhill.com

TEKTRONIX®

7633/R7633

STORAGE OSCILLOSCOPE

WITH OPTIONS

SERVICE

INSTRUCTION MANUAL

Tektronix, Inc.
P.O. Box 500
Beaverton, Oregon 97005

Serial Number _____

First Printing MAR 1974

070-1767-00

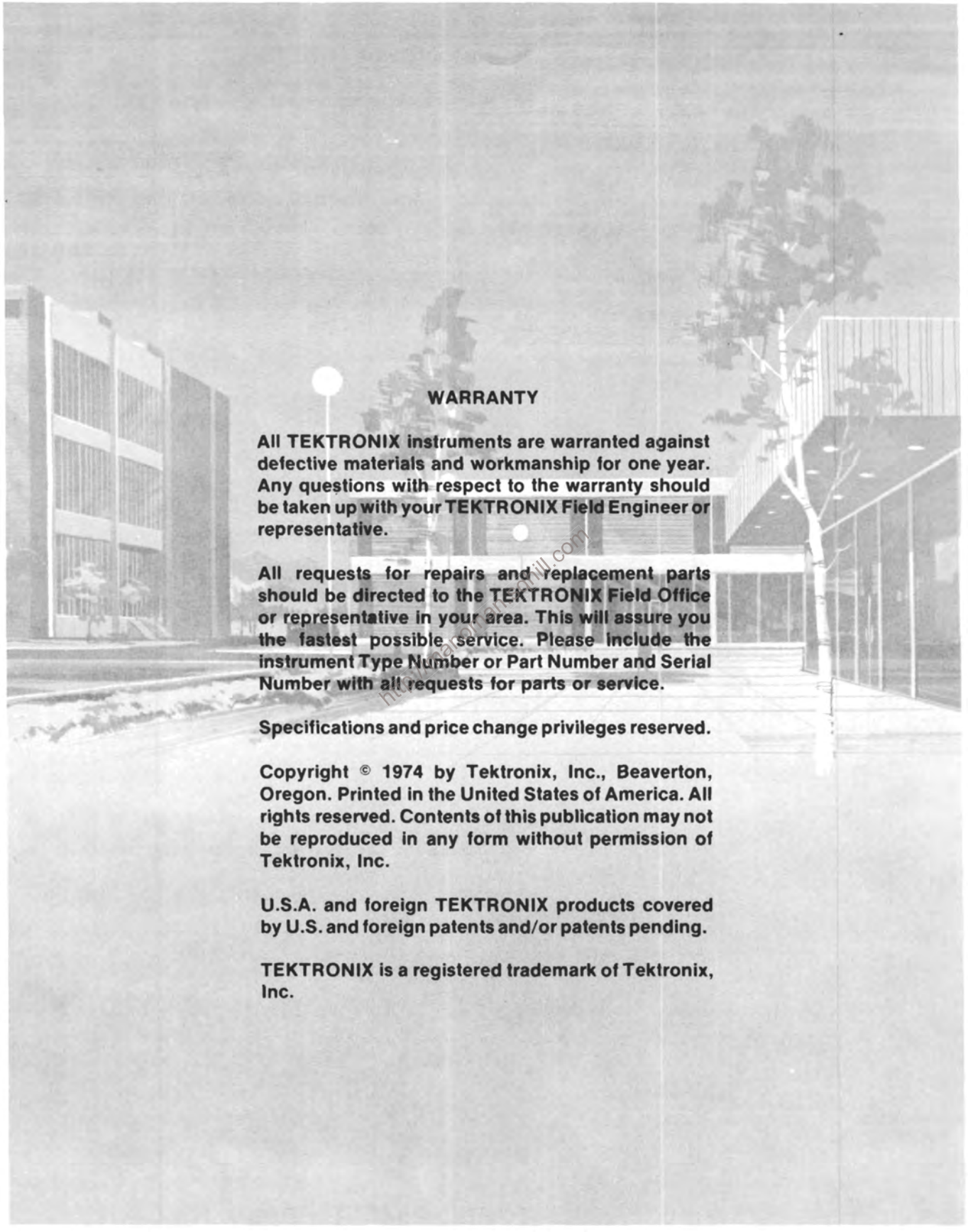

WARRANTY

All TEKTRONIX instruments are warranted against defective materials and workmanship for one year. Any questions with respect to the warranty should be taken up with your TEKTRONIX Field Engineer or representative.

All requests for repairs and replacement parts should be directed to the TEKTRONIX Field Office or representative in your area. This will assure you the fastest possible service. Please include the instrument Type Number or Part Number and Serial Number with all requests for parts or service.

Specifications and price change privileges reserved.

Copyright © 1974 by Tektronix, Inc., Beaverton, Oregon. Printed in the United States of America. All rights reserved. Contents of this publication may not be reproduced in any form without permission of Tektronix, Inc.

U.S.A. and foreign TEKTRONIX products covered by U.S. and foreign patents and/or patents pending.

TEKTRONIX is a registered trademark of Tektronix, Inc.

TABLE OF CONTENTS

	PAGE
LIST OF ILLUSTRATIONS	vi
LIST OF TABLES	ix
SECTION 1 OPERATING INFORMATION	
PRELIMINARY OPERATION	1-1
AC POWER SOURCES	1-1
AC POWER CORD	1-1
OPERATING VOLTAGE	1-1
OPERATING TEMPERATURE	1-3
RACKMOUNTING	1-3
PLUG-IN UNITS	1-4
PLUG-IN INSTALLATION AND REMOVAL	1-4
CONTROLS AND CONNECTORS	1-5
FRONT PANEL CONTROLS AND CONNECTORS	1-6
REAR PANEL CONTROLS AND CONNECTORS	1-8
GENERAL OPERATING INFORMATION	1-10
INTENSITY CONTROL	1-10
DISPLAY FOCUS	1-11
GRATICULE	1-11
LIGHT FILTER	1-12
BEAMFINDER	1-12
REDUCED SCAN MODE	1-12
READOUT MODES	1-13
DISPLAY PHOTOGRAPHY	1-13
STORAGE	1-14
CARE OF STORAGE SCREEN	1-15
VERTICAL MODE	1-16
TRIGGER SOURCE	1-17
X-Y OPERATION	1-18
INTENSITY MODULATION	1-18
RASTER DISPLAY	1-19
CALIBRATOR	1-19
SIGNALS OUT	1-20
APPLICATIONS	1-21
SECTION 2 SPECIFICATIONS	
INTRODUCTION	2-1
STANDARD ACCESSORIES	2-9

http://manoman.sqhill.com

TABLE OF CONTENTS (cont.)

		PAGE
SECTION 3	THEORY OF OPERATION	
	LOGIC FUNDAMENTALS	3-1
	SYMBOLS	3-2
	LOGIC POLARITY	3-5
	INPUT/OUTPUT TABLES	3-5
	NON DIGITAL DEVICES	3-5
	BLOCK DIAGRAM	3-5
	THEORY OF OPERATION	3-9
	MAIN INTERFACE 1	3-9
	LOGIC CIRCUIT 2	3-9
	Z-AXIS LOGIC	3-9
	CLOCK GENERATOR	3-11
	VERTICAL CHOPPED BLANKING	3-12
	CHOP COUNTER	3-15
	VERTICAL MODE CONTROL	3-17
	VERTICAL BINARY	3-18
	PLUG-IN BINARY	3-20
	OUTPUT BUFFERS	3-21
	TRIGGER SELECTOR 3	3-21
	TRIGGER MODE AND ADD SIGNALS	3-21
	TRIGGER CHANNEL SWITCH	3-23
	TRIGGER OUTPUT AMPLIFIER	3-24
	VERTICAL SIGNAL BUFFER	3-25
	VERTICAL INTERFACE 4	3-25
	VERTICAL CHANNEL SWITCH	3-25
	AUXILIARY Y-AXIS INPUT AMPLIFIER	3-26
	DELAY-LINE BUFFER	3-26
	DELAY LINE	3-27
	VERTICAL AMPLIFIER 4	3-27
	CENTERING AND READOUT AMPLIFIER	3-27
	INPUT AMPLIFIER	3-28
	BEAMFINDER NETWORK	3-28
	OUTPUT AMPLIFIER	3-28
	HORIZONTAL AMPLIFIER 5	3-29
	HORIZONTAL CHANNEL SWITCH	3-29
	RIGHT OUTPUT AMPLIFIER	3-30
	LEFT OUTPUT AMPLIFIER	3-30

http://manoman.sqhill.com

TABLE OF CONTENTS (cont.)

	PAGE
SIGNALS OUT BOARD (6)	3-31
VERT SIG OUT	3-31
+ GATE OUT	3-31
+ SAWTOOTH OUT	3-31
CRT CIRCUIT (7)	3-31
HIGH VOLTAGE REGULATION	3-31
AUTO FOCUS DC RESTORER	3-33
AUTO FOCUS	3-34
CONTROL GRID DC RESTORER	3-34
Z-AXIS AMPLIFIER	3-34
CRT CONTROL CIRCUITS	3-35
LOW-VOLTAGE POWER SUPPLY (8)	3-35
POWER INPUT	3-35
–50-VOLT SUPPLY	3-38
–15-VOLT SUPPLY	3-40
+5-VOLT SUPPLY	3-40
+15-VOLT SUPPLY	3-40
+50-VOLT SUPPLY	3-40
+130-VOLT SUPPLY	3-40
GRATICULE LIGHT SUPPLY	3-41
CALIBRATOR AND FRONT PANEL (10)	3-41
CALIBRATOR	3-42
READOUT SYSTEM (9)	3-43
INTRODUCTION	3-43
THREE-COMPARTMENT MAINFRAMES	3-43
DISPLAY FORMAT	3-44
DEVELOPING THE DISPLAY	3-44
TIMER	3-51
TIME-SLOT COUNTER	3-53
WORD TRIGGER	3-54
CHANNEL COUNTER	3-54
READOUT CONTROL	3-54
SINGLE-SHOT LOCKOUT	3-55
ENCODING THE DATA	3-56
COLUMN AND ROW DATA SWITCHES	3-59
DISPLAY-SKIP GENERATOR	3-60
COLUMN AND ROW DECODERS	3-60

http://manoman.sqhill.com

TABLE OF CONTENTS (cont.)

	PAGE
ZEROS LOGIC AND MEMORY	3-61
CHARACTER GENERATORS	3-64
DECIMAL POINT LOGIC AND CHARACTER POSITION COUNTER	3-64
FORMAT GENERATOR	3-65
Y-OUTPUT AMPLIFIER	3-67
X-OUTPUT AMPLIFIER	3-67
DISPLAY SEQUENCE	3-67
STORAGE SYSTEM ◇10◇	3-68
LOGIC	3-68
OPERATIONAL AMPLIFIERS	3-73
SECTION 4 MAINTENANCE	
PRELIMINARY INFORMATION	4-1
PANEL REMOVAL	4-1
POWER UNIT REMOVAL	4-2
PREVENTIVE MAINTENANCE	4-3
CLEANING	4-3
LUBRICATION	4-4
VISUAL INSPECTION	4-5
SEMICONDUCTOR CHECKS	4-5
RECALIBRATION	4-5
TROUBLESHOOTING	4-5
TROUBLESHOOTING AIDS	4-5
TROUBLESHOOTING EQUIPMENT	4-8
TROUBLESHOOTING TECHNIQUES	4-8
CORRECTIVE MAINTENANCE	4-13
OBTAINING REPLACEMENT PARTS	4-13
SOLDERING TECHNIQUES	4-13
COMPONENT REPLACEMENT	4-13
SEMICONDUCTOR REPLACEMENT	4-18
CATHODE-RAY TUBE REPLACEMENT	4-20
SWITCH REPLACEMENT	4-21
GRATICULE-BULB REPLACEMENT	4-22
POWER TRANSFORMER REPLACEMENT	4-22
HIGH VOLTAGE COMPARTMENT	4-22
FUSE REPLACEMENT	4-23
RECALIBRATION AFTER REPAIR	4-23
INSTRUMENT REPACKAGING	4-23

http://mtsoman.sqhill.com

TABLE OF CONTENTS (cont.)

		PAGE
SECTION 5	PERFORMANCE CHECK/CALIBRATION	
	PRELIMINARY INFORMATION	5-1
	CALIBRATION INTERVAL	5-1
	TEKTRONIX FIELD SERVICE	5-1
	USING THIS PROCEDURE	5-1
	TEST EQUIPMENT REQUIRED	5-1
	SPECIAL CALIBRATION FIXTURES	5-2
	CALIBRATION EQUIPMENT ALTERNATIVES	5-2
	SIGNAL CONNECTIONS	5-2
	WARM-UP AND TEMPERATURE REQUIREMENTS	5-2
	PART I—PERFORMANCE CHECK	5-6
	INTRODUCTION	5-6
	OUTLINE FOR PART I—PERFORMANCE CHECK	5-6
	PART II—CALIBRATION	5-28
	INTRODUCTION	5-28
	OUTLINE FOR PART II—CALIBRATION	5-28
SECTION 6	OPTIONS	
SECTION 7	ELECTRICAL PARTS LIST	
SECTION 8	DIAGRAMS	
SECTION 9	MECHANICAL PARTS LIST	
CHANGE INFORMATION		

http://manoman.sqm.com

LIST OF ILLUSTRATIONS

PAGE

Frontispiece

Figure 1-1. Location of voltage-selector jumper. 1-2

Figure 1-2. Front panel controls and connectors. 1-5

Figure 1-3. Rear panel controls and connectors. 1-10

Figure 1-4. Definition of measurement lines on the graticule. 1-11

Figure 1-5. Location of Readout Mode switch. 1-13

Figure 1-6. Location of Calibrator jumper on Storage circuit board. 1-20

Figure 3-1. Block diagram 7633. 3-6

Figure 3-2. Logic circuit block diagram. 3-8

Figure 3-3. Z-Axis logic block diagram. 3-10

Figure 3-4. (A) Clock Generator stage of U55A. (B) Idealized waveforms from Clock Generator stage. 3-11

Figure 3-5. (A) Input and output pins for Vertical Chopped Blanking stage. (B) Idealized waveforms for Vertical Chopped Blanking stage. 3-13

Figure 3-6. (A) Logic diagram for Vertical Chopped Blanking stage. (B) Table of input/output combinations for Vertical Chopped Blanking stage. 3-16

Figure 3-7. Detailed logic diagram of Chop Counter stage. 3-17

Figure 3-8. Idealized input and output waveforms for Chop Counter stage 3-17

Figure 3-9. Logic diagram of Vertical Mode Control and Vertical Mode Buffer Amplifier stages. 3-19

Figure 3-10. Logic diagram of Vertical Binary stage. 3-19

Figure 3-11. Idealized waveforms showing relationship between input and output waveforms for Vertical Binary and Plug-In Binary stages when operating in ALT mode. 3-20

Figure 3-12. Logic diagram of Plug-In Binary and Plug-In Alternate Buffer stage. 3-21

Figure 3-13. Detailed block diagram of Trigger Selector circuit along with simplified diagram of trigger source selection circuitry. 3-22

Figure 3-14. Input levels at pin 4 of U324. 3-23

Figure 3-15. Input/output table for Trigger Channel Switch stage. 3-24

Figure 3-16. Vertical Interface detailed block diagram. 3-25

Figure 3-17. Input/output table for Vertical Channel Switch. 3-26

Figure 3-18. Vertical Amplifier detailed block diagram. 3-27

Figure 3-19. Horizontal Amplifier detailed block diagram. 3-29

Figure 3-20. CRT circuit detailed block diagram. 3-32

Figure 3-21. Low-Voltage Power Supply detailed block diagram. 3-36

Figure 3-22. Schematic illustrating voltage drop between power supply output and load due to resistance of interconnecting wire. 3-39

Figure 3-23. Calibrator detailed block diagram. 3-41

Figure 3-24. Location of readout words on the crt identifying the originating plug-in unit and channel (one complete frame shown). 3-44

http://manuals.mcgraw-hill.com

LIST OF ILLUSTRATIONS (cont.)

PAGE

Figure 3-25. Character Selection Matrix for 7633 Readout System. 3-46

Figure 3-26. Typical readout display where only channel 2 of the Right Vertical and Horizontal units is displayed. 3-47

Figure 3-27. Detailed block diagram of the Readout System. 3-48

Figure 3-28. Output waveforms of Timer stage. 3-50

Figure 3-29. Detail of output at pins 12, 13, 14, and 16 of U2126. 3-51

Figure 3-30. Timer stage operation when Display-Skip condition occurs. 3-52

Figure 3-31. Time relationship of the time-slot (TS) pulses produced by U2159. 3-53

Figure 3-32. Typical encoding scheme for voltage-sensing amplifier plug-in unit. Coding shown for deflection factor of 100 microvolts. 3-57

Figure 3-33. Idealized current waveforms of: (A) Row analog data, (B) Column analog data. 3-58

Figure 3-34. Block representation of memory sequence in U2232. 3-61

Figure 3-35. Typical output waveforms for Zeros Logic and Memory stage operation (at pin 7 of U2232). 3-62

Figure 3-36. Readout word relating 10 possible character locations to the decimal point instructions that can be encoded, and the resultant crt display. 3-65

Figure 3-37. Flow chart for character generation by the Readout System. 3-66

Figure 3-38. Storage circuit simplified block diagram. 3-68

Figure 3-39. Time relationship of Storage logic pulses. 3-69

Figure 3-40. BISTABLE mode Storage waveforms. 3-70

Figure 3-41. VAR PERSIST mode Storage waveforms. 3-71

Figure 3-42. FAST BISTABLE mode Storage waveforms. 3-72

Figure 3-43. FAST VAR PERSIST mode Storage waveforms. 3-74

Figure 4-1. Power Unit removal. 4-2

Figure 4-2. Location of circuit boards in the 7633. 4-6

Figure 4-3. Location of circuit boards in the R7633. 4-7

Figure 4-4. Circuit isolation troubleshooting chart. 4-10

Figure 4-5. Location of screws holding Low Voltage sub-chassis. 4-17

Figure 4-6. Location of screws holding Signals Out rear panel. 4-18

Figure 5-1. Typical crt display when checking X-Y phase shift. 5-15

Figure 5-2. Location of Calibrator AC/DC jumper. 5-17

Figure 5-3. Location of High-Voltage Test Point. 5-32

Figure 5-4. Location of adjustments in High-Voltage cover. 5-34

Figure 5-5. Typical display showing front corner of waveform for Horizontal system high-frequency compensation adjustment. 5-46

Figure 5-6. Typical crt display when checking X-Y phase shift. 5-47

Figure 5-7. Location of Calibrator AC/DC jumper. 5-50

Figure 5-8. Idealized Erase waveform. 5-57

http://manoman.sqhk.com

LIST OF ILLUSTRATIONS (cont.)

PAGE

Figure 5-9. Idealized Erase and Transfer waveform. 5-58
Figure 5-10. VAR PERSIST Front Mesh ramp. 5-61
Figure 5-11. PERSISTENCE pulses. 5-63

Section 8 figures are located near their associated diagrams on the foldout pages.

Figure 8-1. Semiconductor lead configurations.
Figure 8-2. A1-Main Interface Board.
Figure 8-3. A2-Logic Board.
Figure 8-4. A3-Trigger Selector Board.
Figure 8-5. A4-Vertical Interface Board.
Figure 8-6. A5-Vertical Amplifier Board (front).
Figure 8-7. A5-Vertical Amplifier Board (rear).
Figure 8-8. A6-Horizontal Amplifier Board.
Figure 8-9. A7-Output Signals Board.
Figure 8-10. A8-Z-Axis Board.
Figure 8-11. A9-Anode Board.
Figure 8-12. A10-High-Voltage Board.
Figure 8-13. All-Low-Voltage Rectifier Board.
Figure 8-14. A12-Low-Voltage Regulator Board.
Figure 8-15. A13-Readout Board.
Figure 8-16. A14-Storage Board.
Figure 8-17. Adjustment locations-Z-Axis Board.
Figure 8-18. Adjustment locations-High-Voltage Board.
Figure 8-19. Adjustment locations-Vertical Amplifier Board.
Figure 8-20. Adjustment locations-Horizontal Amplifier Board.
Figure 8-21. Adjustment locations-Readout Board.
Figure 8-22. Adjustment locations-Signals Out Board.
Figure 8-23. Adjustment locations-Low-Voltage Regulator Board.
Figure 8-24. Adjustment locations-Storage Board.

http://manoman.sqhill.com

LIST OF TABLES

	PAGE
TABLE 1-1. Power Cord Color-Coding	1-1
TABLE 1-2. Regulating Range and Fuse Data	1-3
TABLE 2-1. ELECTRICAL	2-1
TABLE 2-2. ENVIRONMENTAL	2-8
TABLE 2-3. PHYSICAL	2-8
TABLE 2-4. 7633 SYSTEM SPECIFICATIONS	2-10
TABLE 3-1. Basic Logic Reference	3-2
TABLE 3-2. Standard Readout Format	3-45
TABLE 3-3. Channel Address Code	3-55
TABLE 4-1. Power Supply Tolerances	4-9
TABLE 4-2. Fuse Rating	4-23
TABLE 5-1. Test Equipment	5-3
TABLE 5-2. Power Supply Tolerances	5-32
TABLE 5-3. High-Frequency Compensation Adjustments	5-41

http://manoman.sqhill.com

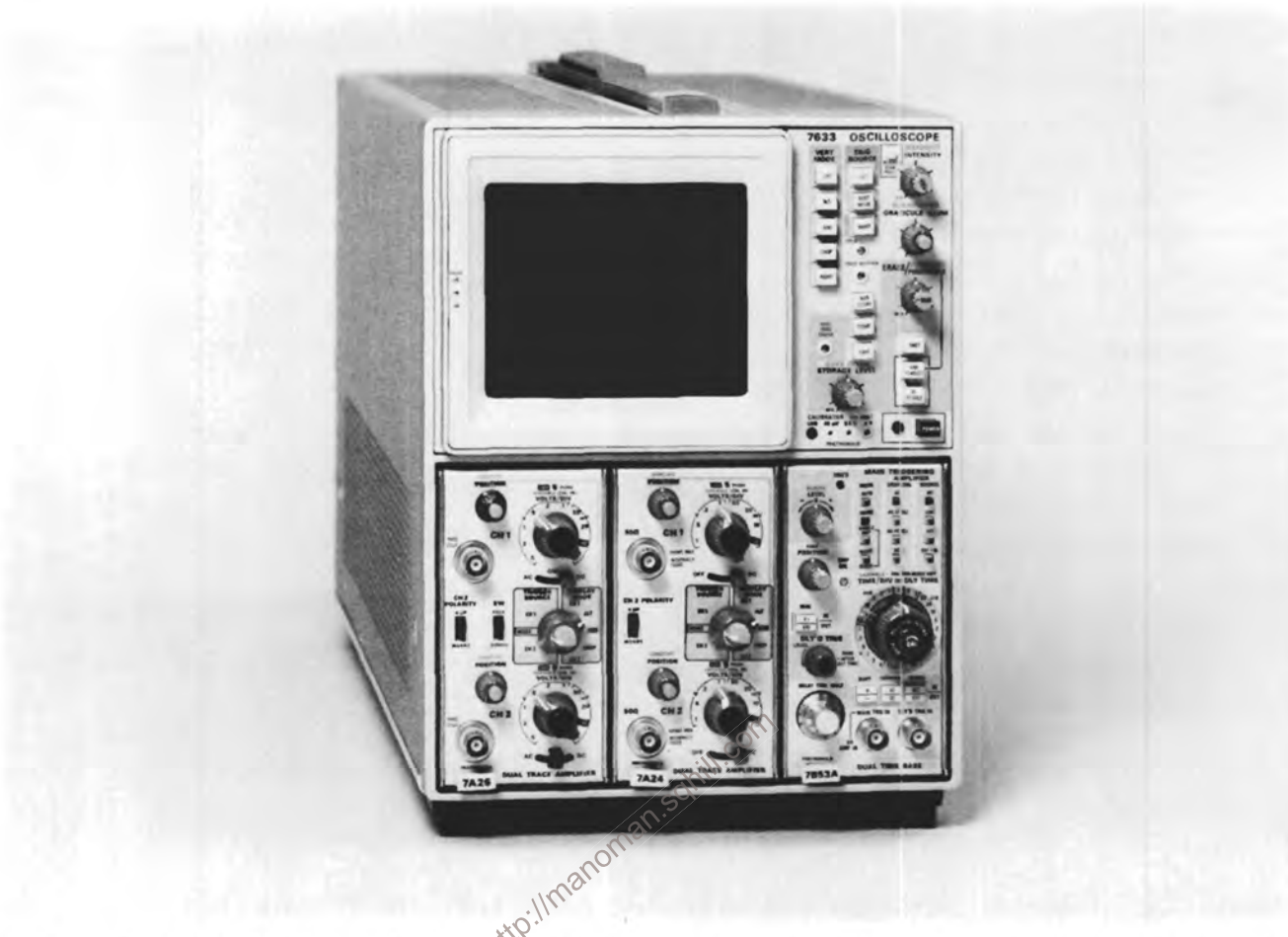

http://manoman.sqhill.com

The Tektronix 7633/R7633 Storage Oscilloscope is a solid-state instrument especially designed for fast writing rate storage applications. The 7633 operates in three display modes—NON STORE, STORE, and SAVE, and four storage modes—BISTABLE, VAR PERSIST, FAST BISTABLE, and FAST VAR PERSIST. The display and storage functions can be operated in either a full scan or a Reduced Scan mode. In FAST VAR PERSIST, the Reduced Scan feature effectively increases the writing speed approximately seven times. The instrument accepts any Tektronix 7-Series plug-in units to form a highly flexible measurement system.

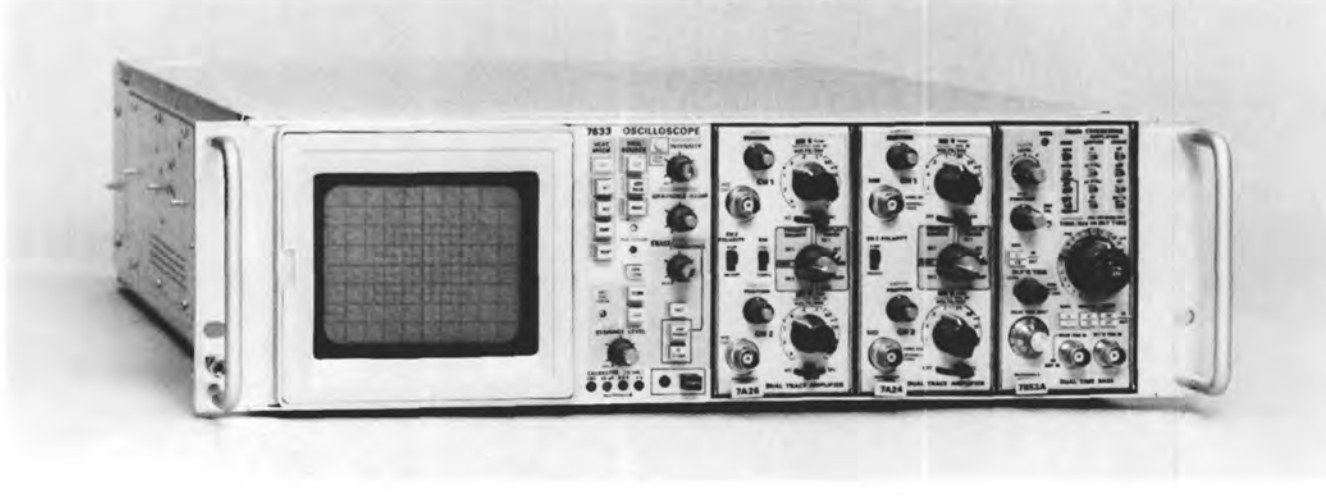

OPERATING INFORMATION

PRELIMINARY OPERATION

To effectively use the 7633/R7633 Storage Oscilloscope, the operation and capabilities of the instrument must be known. This section provides preliminary operating information, describes operation of controls and connectors, and provides general operating information.

AC POWER SOURCES

This instrument is intended to be operated from a single-phase, earth-referenced power source having one current-carrying conductor (the Neutral Conductor) near earth potential. Operation from power sources where both current-carrying conductors are live with respect to earth (such as phase-to-phase on a three-wire system) is not recommended since only the Line Conductor has over-current (fuse) protection within the instrument.

AC POWER CORD

This instrument has a three-wire power cord with a three-terminal polarized plug for connection to the power source and safety-earth. The safety-earth terminal of the plug is directly connected to the instrument frame. For electric-shock protection, insert this plug only in a mating outlet with a safety-earth contact or otherwise connect the frame to a safety earth system. The color-coding of the cord conductors is in accordance with recognized standards as shown in Table 1-1.

NOTE

The power cord on Tektronix instruments may conform to either of the following two electrical codes:

http://mayoman.sqhill.com

TABLE 1-1

Power Cord Color Coding

Conductor	USA (NEC) & Canada	IEC
Line	Black	Brown
Neutral	White	Light Blue*
Safety-Earth	Green with Yellow stripe	Green with Yellow stripe

***Tinned copper conductor.**

OPERATING VOLTAGE

The 7633/R7633 can be operated from either a 110-volt or a 220-volt nominal line-voltage source. In addition, three operating ranges can be selected within each nominal line voltage source. Use the following procedure to obtain correct instrument operation from the line voltage available:

1. Disconnect the instrument from the power source.
2. Remove the six screws securing the power unit (nine screws in the R7633; see Figure 1-1).
3. Slide the power unit out of the rear of the chassis.

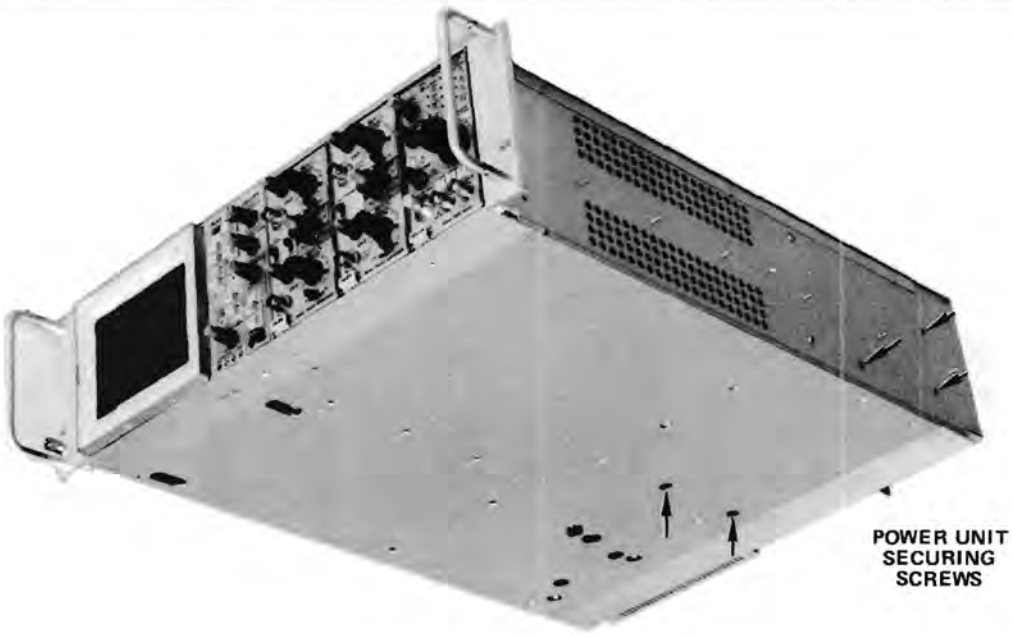

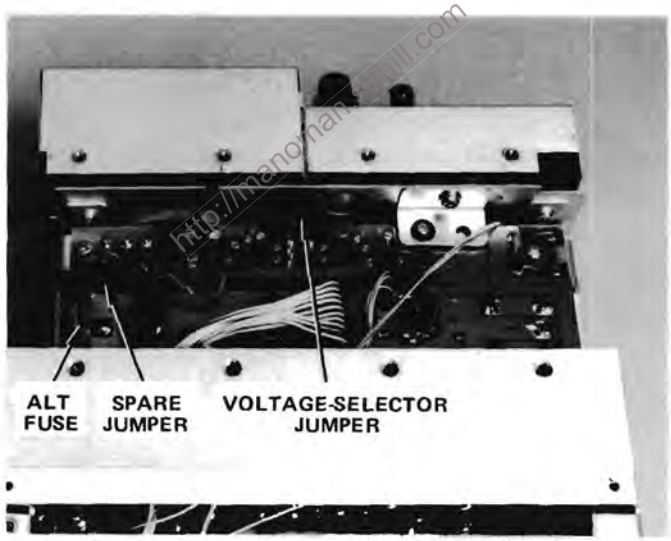

http://manohan...ill.com

Figure 1-1. Location of voltage-selector jumper.

4. To convert from 110-volts to 220-volts nominal line voltage, or vice versa, remove the voltage-selector jumper and replace it with the spare jumper stored on the pins adjacent to the voltage selector area (see Figure 1-1). The jumpers are color coded to indicate the nominal voltage for which they are intended; brown for 110-volt nominal operation and red for 220-volt nominal operation. Change the fuse to provide protection for the selected nominal line voltage. Use the fuse located in the Alt Fuse holder on the Rectifier board (see Figure 1-1 for fuse location and Table 1-2 for fuse type). Also, change the line-cord plug to match the power-source receptacle or use a suitable adapter.

5. To convert the instrument from one regulating range to another, remove the voltage selector jumper and re-install it on the set of pins corresponding to the desired regulating range. The proper regulating range will center about the average line voltage to which the instrument is to be connected (see Table 1-2).

TABLE 1-2
Regulating Range and Fuse Data

Pins Selected	Regulating Range	
	110-volts (nominal)	220-volts (nominal)
LOW	90 to 110 volts	180 to 220 volts
MED	99 to 121 volts	198 to 242 volts
HI	108 to 132 volts	218 to 262 volts
Line Fuse	3.2 A slow-blow	1.6 A slow-blow

OPERATING TEMPERATURE

The 7633 can be operated where the ambient air temperature is between 0°C and +50°C. This instrument can be stored in ambient temperatures between −55°C and +75°C. After storage at temperatures beyond the operating limits, allow the chassis temperature to come within the operating limits before power is applied.

http://manoman.sqhl.com/

The 7633 is cooled by air drawn in through the top, side, and bottom panels and exhausted through the rear panel. Components that require most cooling are mounted externally on a heat radiator. Adequate clearance must be provided on all sides to allow heat to be dissipated from the instrument. Do not block or restrict the air flow through the holes in the cabinet or the heat radiator. Maintain the clearance provided by the feet on the bottom and allow about two inches clearance on the top, sides, and rear (more if possible).

The R7633 is cooled by air drawn in through the air filter on the rear panel and exhausted through ports on the right side of the instrument. Adequate clearance must be provided at these locations. Allow at least one and one-half inches clearance behind the air filter and at least one inch on the right side.

A thermal cutout interrupts power to the instrument if the internal temperature exceeds a safe operating level. Power is automatically restored when the temperature returns to a safe level. Operation in confined areas or close to a heat source may cause the thermal cutout to open.

RACKMOUNTING

Instructions and dimensional drawings for rackmounting the R7633 are located in Section 3 of the Operators manual.

PLUG-IN UNITS

The 7633 will accept up to three 7-series plug-in units. This plug-in feature permits a variety of display combinations and also allows selection of bandwidth, sensitivity, display mode, etc. to meet many measurement requirements. In addition, it allows expansion of the oscilloscope system to meet future measurement requirements. The overall capabilities of the resultant system are in large part determined by the characteristics of the plug-in selected. For complete information on plug-ins available for use with this instrument, see the current Tektronix, Inc., catalog.

PLUG-IN INSTALLATION AND REMOVAL

To install a plug-in unit into one of the plug-in compartments, align the slots in the top and bottom of the plug-in with the associated guide rails in the plug-in compartment. Push the plug-in unit firmly into the plug-in compartment until it locks into place. To remove a plug-in, pull the release latch on the plug-in unit to disengage it and pull the unit out of the plug-in compartment. Plug-in units can be removed or installed without turning off the instrument power.

It is not necessary that all of the plug-in compartments be filled to operate the instrument; the only plug-in units needed are those required for the measurement to be made. However, at environmental extremes, excess radiation may be radiated into or out of this instrument through the open plug-in compartments. Blank plug-in panels are available from Tektronix, Inc., to cover the unused compartment; order Part No. 016-0155-00.

http://manuals.sqhill.com

When the 7633 is calibrated in accordance with the calibration procedure given in the Service manual, the vertical and horizontal gains are standardized. This allows calibrated plug-in units to be changed from one plug-in compartment to another without recalibration. However, the basic calibration of the individual plug-in units should be checked when they are installed in this system to verify their measurement accuracy. See the plug-in unit instruction manual for verification procedure.

Special purpose plug-in units may have specific restrictions regarding the plug-in compartments in which they can be installed. This information will be given in the instruction manual for these plug-in units.

CONTROLS AND CONNECTORS

The major controls for operation of the 7633 are located on the front panel of the instrument. These are illustrated in Figure 1-2. Figure 1-3 shows the location of rear panel controls and connectors. The following is a brief description of the controls and connectors shown in Figures 1-2 and 1-3. More detailed operating information is given under General Operating Information.

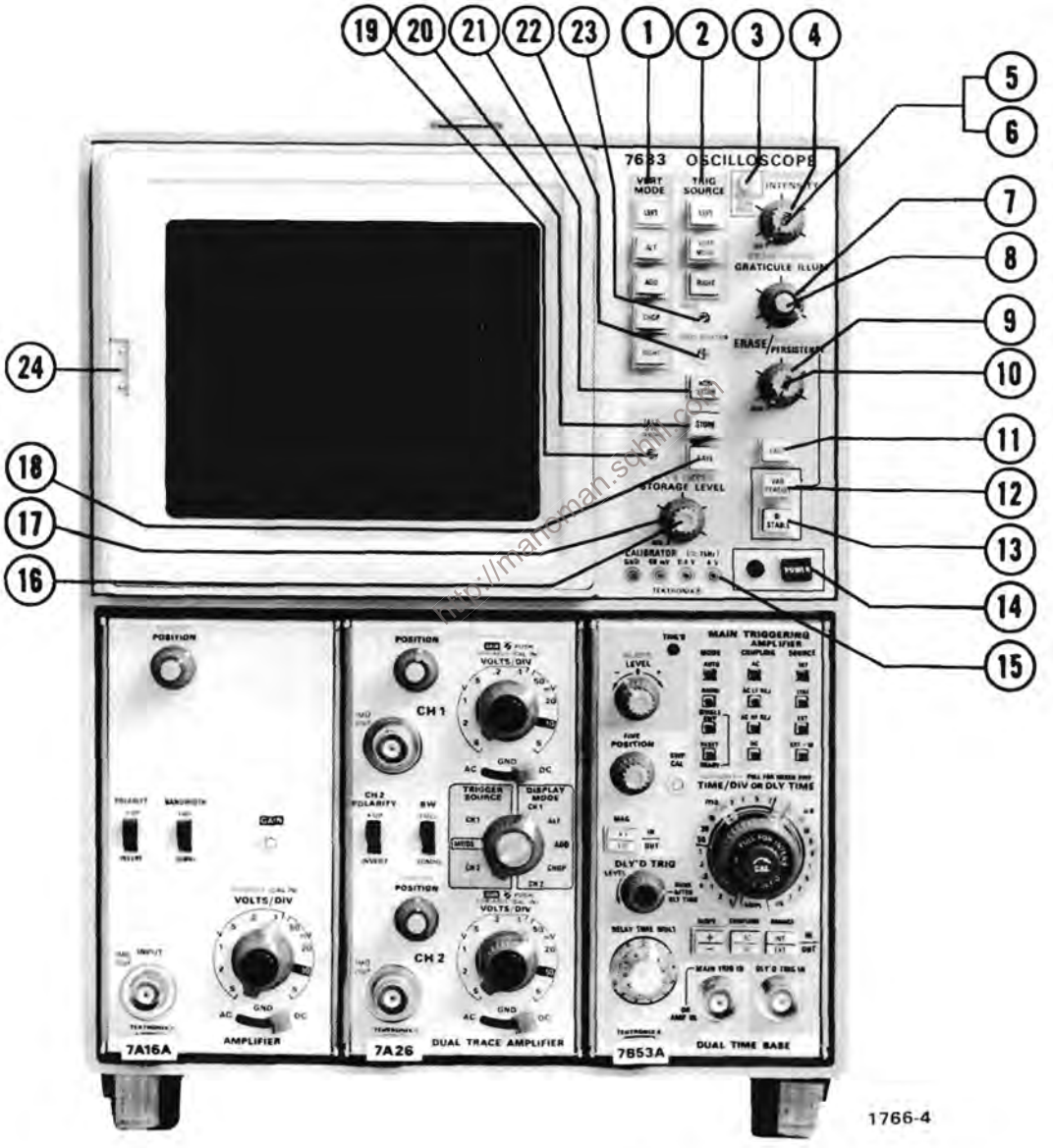

Figure 1-2. Front panel controls and connectors.

FRONT PANEL CONTROLS AND CONNECTORS

The following descriptions are referenced to Figure 1-2.

(1) VERT MODE: Selects vertical mode operation.

LEFT: Selects signals from the left vertical amplifier compartment for display.

ALT: Selects signals from both vertical compartments for display on alternate sweeps (dual trace).

ADD: Algebraically adds the signals from both vertical compartments and displays the sum.

CHOP: Selects signals from both vertical compartments for display (dual trace). The display switches between both vertical compartment signals, during the sweep, at a one megahertz rate.

RIGHT: Selects signals from the right vertical amplifier compartment for display.

(2) TRIG SOURCE: Selects the source of the internal trigger for the plug-in unit in the horizontal compartment.

LEFT: Selects the left vertical compartment as the internal trigger source.

VERT MODE: Internal trigger signals are determined by the VERT MODE switch.

RIGHT: Selects the right vertical compartment as the internal trigger source.

http://manoman.sqhill.com

(3) REDUCED SCAN—Indicator light illuminates when in the Reduced Scan mode.

(4) INTENSITY—Controls the brightness of the display.

(5) REDUCED SCAN—Pull switch selects Reduces Scan operation; push for normal operation.

(6) READOUT—Turns on the Readout system and controls the brightness of the Readout display. (Option 1 deletes this function.)

(7) BEAMFINDER—When pressed, this switch limits the display to within the graticule area.

(8) GRATICULE ILLUM—Controls the illumination of the graticule.

FRONT PANEL CONTROLS AND CONNECTORS (cont.)

(9) ERASE—Initiates erase cycles; either MANual or PERIODIC.

MANual: When pressed, initiates an erase cycle to erase the stored display and provide a single-shot reset command to the plug-in time-base unit. Operation is locked out in SAVE display mode.

PERIODIC: Controls the time between automatic erase cycles. If the erase period ends during a sweep, the erasure is delayed till the end of that sweep. This control has a counterclockwise OFF detent position. Operation is locked out in the SAVE display mode.

(10) PERSISTENCE—Controls the view time of the VAR PERSIST and FAST VAR PERSIST stored displays. Operation is locked out in the SAVE display mode.

(11) FAST—Used in conjunction with the VAR PERSIST and BISTABLE storage selections to choose the fast transfer storage modes of either FAST VAR PERSIST or FAST BISTABLE.

(12) VAR PERSIST—Selects the Variable Persistence storage mode. The stored display is of variable intensity dependent upon the setting of the STORAGE LEVEL, density of charge deposited when storing, etc. The stored display can be erased at a controllable, continuous rate determined by the setting of the PERSISTENCE control. When not being erased, the view time is limited by the natural bright fading of the storage target.

http://manoman.sqhill.com

(13) BISTABLE—Selects the BISTABLE storage mode. The stored display is substantially of two fixed intensity levels; written (bright) and unwritten (background). An erase cycle returns the display to the unwritten state.

(14) POWER—Switch and indicator. Switch applies power to the instrument and the indicator illuminates to indicate the power is on.

(15) CALIBRATOR—Positive going square wave or dc voltage selected by an internal jumper. Output voltage at pin jacks (4 V, 0.4 V, and 40 mV).

(16) STORAGE LEVEL—Controls the voltage level on the storage targets. Adjusts writing speed in FAST BISTABLE, VAR PERSIST, and FAST VAR PERSIST.

(17) SAVE INTEN—Used in conjunction with SAVE to control the storage viewing intensity. At reduced intensity, the view time of the stored VAR PERSIST display is proportionately extended.

(18) SAVE—Selects the SAVE display mode. The stored display is retained at a controllable SAVE INTENSITY and the erase functions are locked out. The time-base unit is inhibited except when the SAVE mode is entered from STORE before a sweep occurs. If this is done, the display will wait in the STORE mode and enter SAVE automatically at the end of the next

FRONT PANEL CONTROLS AND CONNECTORS (cont.)

occuring sweep. This is referred to as the 'babysitting' mode.

(19) FAST LEVEL CENTER—Adjusts the voltage level of the FAST target relative to the viewing target and, therefore, the tracking of the STORAGE LEVEL for the two targets.

(20) STORE—Selects the STORE display mode.

(21) NON STORE—Selects conventional display mode. Storage system is inoperative.

(22) TRACE ROTATE—Adjusts alignment of the trace with the horizontal graticule line.

(23) FOCUS—Provides adjustment for display definition.

(24) CAMERA POWER—Three-pin connector on crt bezel provides power output and receives remote single-sweep reset signal from compatible camera systems.

REAR PANEL CONTROLS AND CONNECTORS

The following descriptions are referenced to Figure 1-3.

http://manoman.sqhill.com

(25) FUSE—Line voltage fuse.

(26) REMOTE ERASE IN—Provides external connection for remote erase.

(27) EXT SS RESET IN—Remote single sweep reset.

(28) EXT Z AXIS IN—Input for intensity modulation of the crt display.

(29) VERT SIG OUT—Vertical signal selected by TRIG SOURCE switch (LEFT, RIGHT, ALT, and ADD).

(30) + GATE OUT—Gate signal selected by gate selector switch (Main, Auxiliary, and Delay).

(31) + SAWTOOTH OUT—Positive-going sawtooth from time-base unit.

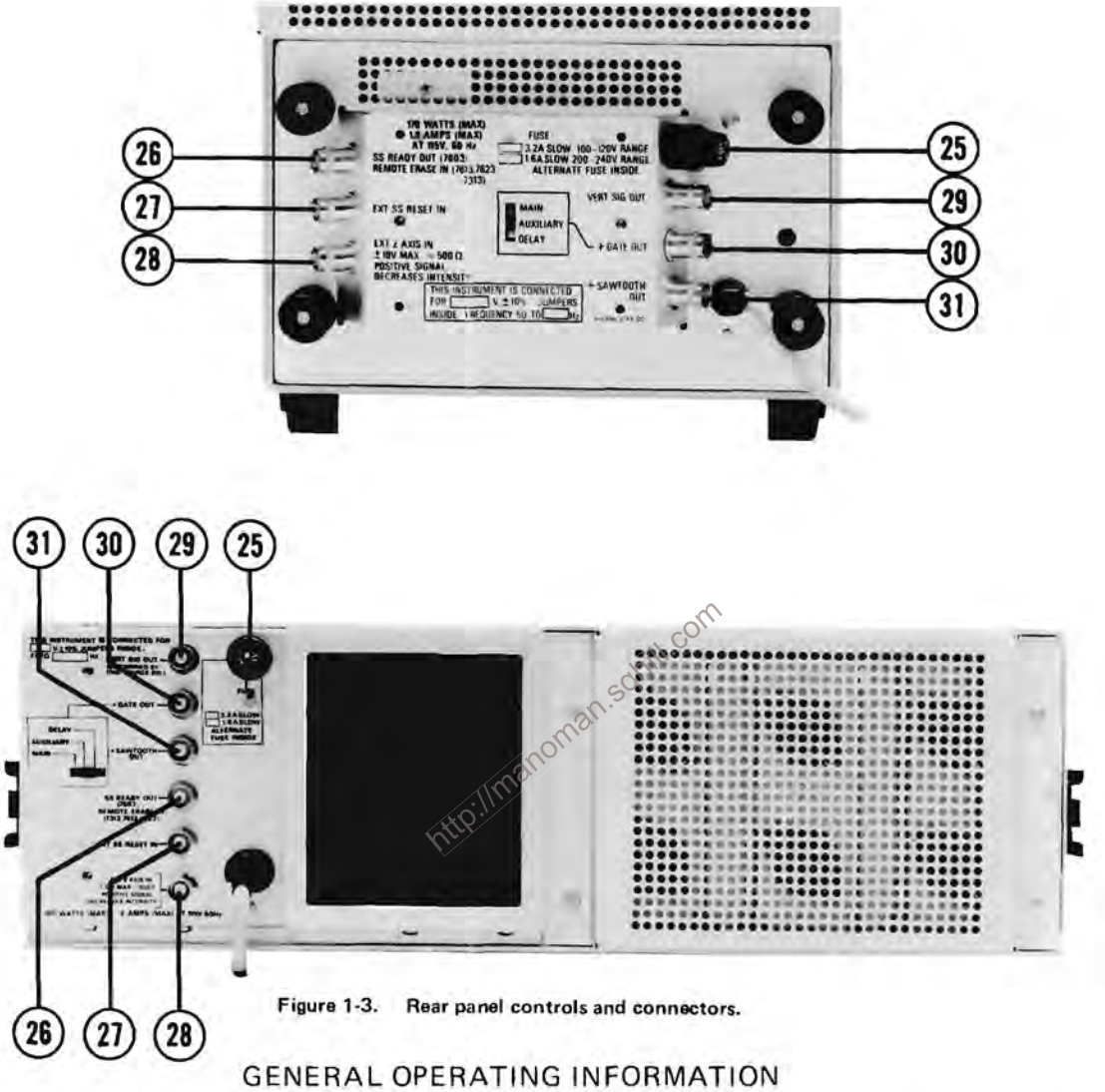

Figure 1-3. Rear panel controls and connectors.

http://manoman.scdn.com

GENERAL OPERATING INFORMATION

INTENSITY CONTROL

The setting of the INTENSITY control may affect the correct focus of the display. Slight re-adjustment of the FOCUS adjustment may be necessary, when the intensity level is changed. To protect the crt phosphor, do not turn the INTENSITY control higher than necessary to provide a satisfactory display. The light filters reduce the observed light output from the crt. When using these filters, avoid advancing the INTENSITY control to a setting that may burn the phosphor. When the highest intensity display is desired, remove the filters and use only the clear faceplate protector (permanently installed behind bezel). Apparent trace intensity can also be improved in such cases by reducing the ambient light level or using a viewing hood. Also, be careful that the INTENSITY control is not set too high when changing the time-base unit sweep rate from a fast to a slow sweep rate, or when changing to the X-Y mode of operation. The instrument incorporates protection circuitry which automatically reduces the display intensity to a lower level when the time-base unit is set to a slow sweep rate. This reduces the danger of damaging the crt phosphor at these lower sweep rates.

DISPLAY FOCUS

The FOCUS adjustment allows control for best definition of the crt display. The Readout intensity should be turned on when adjusting the focus. Slight re-adjustment of this control may be necessary as display conditions change. If a properly focused display cannot be obtained with the FOCUS adjustment, the internal Astigmatism adjustment must be re-set; see the Calibration section of the Service manual.

GRATICULE

The graticule of the 7633 is marked on the inside of the faceplate of the crt, providing accurate, non-parallax measurements. The graticule is divided into eight vertical and ten horizontal divisions. Each full scan division is 0.9 centimeter square divided into five minor divisions. A Reduced Scan graticule is etched in the center of the full scan graticule. Each Reduced Scan division is exactly half (0.45 centimeter) of a full scan division. The vertical gain and horizontal timing of the plug-in units are calibrated to the graticule so accurate measurements can be made from the crt. The illumination of the graticule lines can be varied with the GRATICULE ILLUM control.

Fig. 1-4 shows the graticule of the 7633 and defines the various measurement lines. The terminology defined here will be used in all discussions involving graticule measurements. Notice the 0%, 10%, 90%, and 100% markings on the left side of the graticule. These markings are provided to facilitate rise-time measurements.

http://manoman.sqhill.com

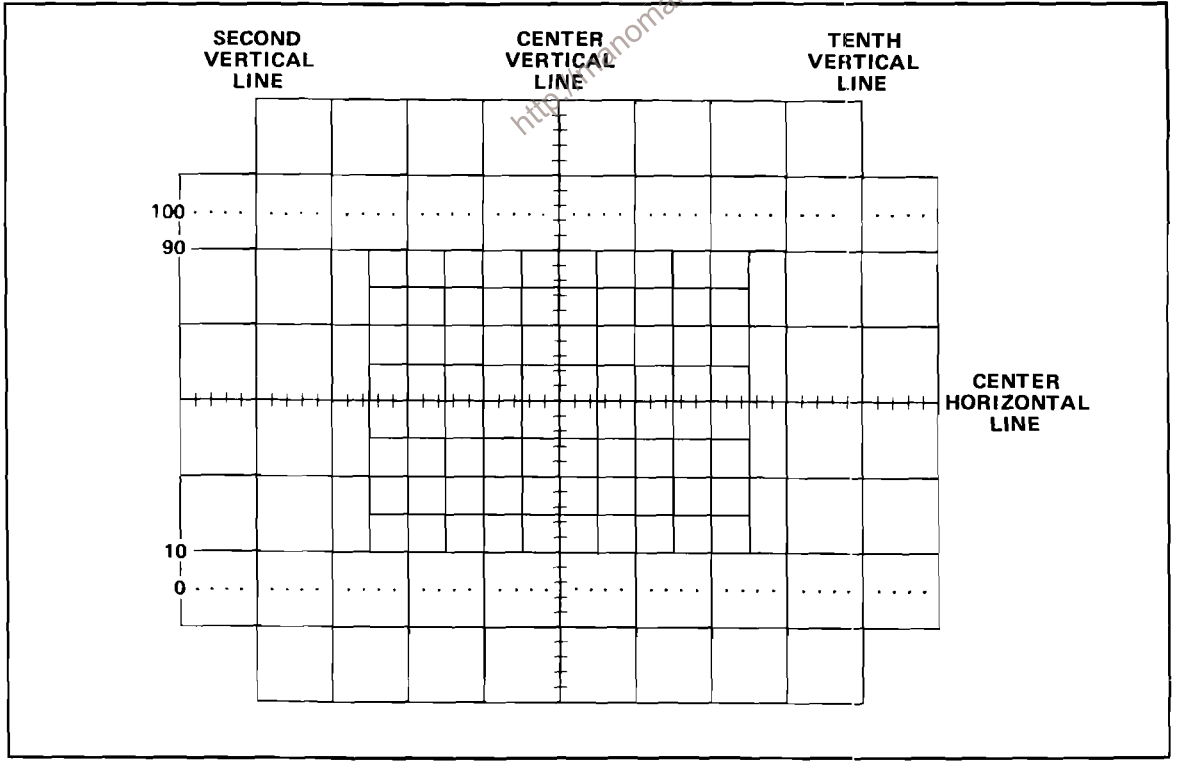

Figure 1-4. Definition of measurement lines on the graticule.

LIGHT FILTER

The tinted filter provided with the 7633 minimizes light reflections from the face of the crt to improve contrast when viewing the display under high ambient light conditions. This filter should be removed for waveform photographs or when viewing high writing rate displays. To remove the filter, pull outward on the bottom of the plastic crt mask and remove it from the crt bezel. Remove the tinted filter; leave the clear plastic faceplate protector installed and replace the bezel. The faceplate protector should be left in place at all times to protect the crt faceplate from scratches.

An optional mesh filter is available for use with the 7633. This filter provides shielding against radiated EMI (electro-magnetic interference) from the face of the crt. It also serves as a light filter to make the trace more visible under high ambient light conditions. The mesh filter fits in place of the plastic crt mask and the tinted filter. The filter can be ordered by Tektronix Part No. 378-0603-00.

BEAMFINDER

The BEAMFINDER switch provides a means of locating a display which overscans the viewing area either vertically or horizontally. When the BEAMFINDER switch is pressed and held, the display is compressed within the graticule area. Release the BEAMFINDER switch to return to a normal display. To locate and reposition an overscanned display, use the following procedure:

http://manoman.sqhill.com

1. Press and hold the BEAMFINDER switch.

2. Increase the vertical and horizontal deflection factors until the vertical deflection is reduced to about two divisions and the horizontal deflection is reduced to about four divisions (the horizontal deflection needs to be reduced only when in the X-Y mode of operation).

3. Adjust the vertical and horizontal position controls to center the display about the vertical and horizontal center lines of the graticule.

4. Release the BEAMFINDER switch; the display should remain within the viewing area.

REDUCED SCAN MODE

The Reduced Scan mode increases the stored writing speed (in centimeters/microsecond) to about four times that of the full scan mode. This is achieved by increasing the crt cathode voltage from 1.5 kilovolts in the full scan mode to 3 kilovolts in the Reduced Scan mode, which results in higher beam energy and a smaller spot size.

The calibrated division size changes from 0.9 centimeters in the full scan mode to 0.45 centimeters in Reduced Scan. Calibrated measurements are confined to the inner 8 x 10 Reduced Scan divisions of the graticule area.

READOUT MODES (Option 1 deletes)

The characters of the readout display are written by the crt beam on a time-share basis with signal waveforms. The Readout System operates in a free-running mode to randomly interrupt the waveform display to present the readout characters. The Readout System can also operate in a GATE TRIG'D mode; no readout signal is produced until after the sweep has occurred. In this mode the sweep must run to have a readout display. Switch 2110, located on the Readout board, changes the Readout modes. See Figure 1-5 for location of S2110.

DISPLAY PHOTOGRAPHY

A permanent record of the crt display can be obtained with an oscilloscope camera system. The instruction manuals for the Tektronix Oscilloscope Cameras include complete instructions for obtaining waveform photographs. The following information applies only to the 7633 Oscilloscope.

The crt bezel of the 7633 provides integral mounting for Tektronix Oscilloscope Cameras. Three pins, located on the crt bezel, connect power to compatible camera systems. These pins also sense control signals from Tektronix automatic cameras to permit camera-controlled single-shot photography (see the camera manual for further information).

Photographs of waveforms stored in the VAR PERSIST mode are obtained in the same manner as those taken in normal operation. However, to obtain satisfactory photographs of a stored BISTABLE display, it is often necessary to switch into the SAVE mode and use reduced intensity.

http://manuals.spill.com

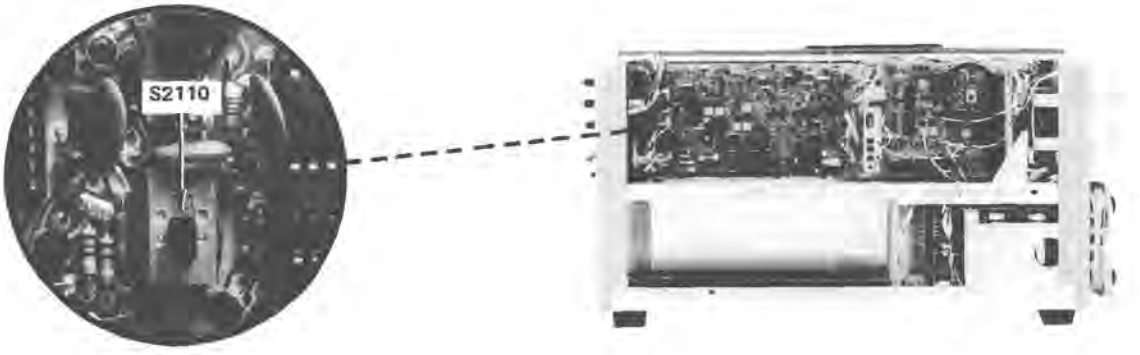

Figure 1-5. Location of Readout Mode switch.

STORAGE

The 7633 Transfer Storage Oscilloscope has four selectable storage modes (listed in order of increasing writing speed): BISTABLE, VAR PERSIST, FAST BISTABLE, and FAST VAR PERSIST. The storage writing speed in all storage modes is affected by the setting of the INTENSITY control. The STORAGE LEVEL control also adjusts writing speed in all storage modes except BISTABLE. The STORAGE LEVEL control adjusts the bias voltage on the Front Mesh in VAR PERSIST mode and on the Fast Mesh in the FAST modes.

Fastest writing speed is obtained with the INTENSITY control set to maximum without blooming the trace and the STORAGE LEVEL set in the two o'clock position.

The erase cycle removes any previous display from the Front (view) Mesh and prepares this mesh for receipt of a waveform. Erase cycles are initiated by pressing the MANual knob or by rotating it out of the MAX detent position for PERIODIC erasure. Frequency of PERIODIC ERASE cycles can be controlled in the 2 - 10 second range. If a sweep is in progress when the PERIODIC ERASE cycle occurs, the erase cycle is delayed until the end of sweep. Thus, the PERIODIC ERASE control can be used to set up an erase-after-sweep operation for slower periodic sweeps. A Single Sweep Reset is sent to the time-base unit at the end of each erase cycle. Consequently, if the time-base unit is in the single-sweep mode, it is automatically armed to run once following each erase cycle.

REMOTE ERASE is commanded by a ground closure applied to the rear panel input.

http://manoman.tekhill.com

BISTABLE MODE

In the BISTABLE storage mode, the INTENSITY control adjusts for optimum stored display. Slower signals require less intensity to store than faster signals. The STORAGE LEVEL and PERSISTENCE controls do not operate in the BISTABLE mode.

VARIABLE PERSISTENCE MODE

In the VAR PERSIST mode, the INTENSITY and STORAGE LEVEL controls adjust the writing speed and the PERSISTENCE control adjusts the length of time the stored signal is visible before it fades into the background.

FAST MODES

Time-base unit operation is modified by the Storage system in the FAST storage modes to permit individual sweeps to recur at about one second intervals. This permits the Fast Mesh to be prepared between sweeps. After each sweep, the signal is transferred from the Fast Mesh to the Front Mesh for viewing. Then, the Fast Mesh is prepared again for the next sweep and the cycle repeats.

If an erase cycle occurs, Fast Mesh preparation takes place during the erase cycle. However, it is not necessary to ERASE for the sweep and transfer functions to cycle. For instance, if the time-base

unit is set for single-sweep, multiple sweeps can be stored by pressing the reset button on the time-base unit. If the time-base unit is set for auto triggering, the sweep and transfer functions automatically operate in a cyclical fashion. After each sweep, the display transfers to the Front Mesh for viewing and the Fast Mesh is prepared for the next sweep. Since no erase cycle is generated, multiple sweeps can be stored automatically in this manner. This can be more easily observed if the vertical position is varied between sweeps.

FAST BISTABLE MODE

This mode operates the same as BISTABLE except the display is written on the Fast Mesh and transferred to the Front Mesh for viewing as described above. Therefore, the STORAGE LEVEL control setting affects the stored writing speed.

FAST VARIABLE PERSISTENCE MODE

This mode combines the operation of both VAR PERSIST and FAST BISTABLE. The PERSISTENCE control adjusts the view time, the STORAGE LEVEL adjusts writing speed, and the display will automatically sweep and transfer when the time-base unit is set for auto triggering.

SAVE MODE

The SAVE mode can be entered from either storage mode to retain a stored display indefinitely. The intensity of the stored display in the SAVE mode is adjusted by the SAVE INTEN control. When the SAVE mode is selected, the ERASE function is locked out to prevent erasure of the stored display. Also, the time-base unit is inhibited except when the SAVE mode is entered from STORE before a sweep occurs. If this is done, the display will wait in the STORE mode until a sweep occurs. When a sweep occurs the display will automatically enter SAVE. This is referred to as the 'Babysitting' mode.

http://manoman.sqhill.com

CARE OF STORAGE SCREEN

The following precautions will prolong the useful storage life of the crt screen used in this instrument.

1. Use minimum beam intensity to produce a clear, well-defined display.

2. Use minimum SAVE INTEN when storing images for extended periods of time.

3. Avoid repeated use of the same area of the screen. If a particular display is being stored repeatedly, change the vertical position occasionally to use other portions of the display area.

VERTICAL MODE

LEFT AND RIGHT MODE

When the LEFT or RIGHT button of the VERT MODE switch is pressed, only the signal from the plug-in unit in the selected compartment is displayed.

ALTERNATE MODE

The ALT position of the VERT MODE switch produces a display which alternates between the plug-in units in the left vertical and right vertical compartments with each sweep of the crt. Although the ALT mode can be used at all sweep rates, the CHOP mode provides a more satisfactory display at sweep rates below about 20 milliseconds/division. At these slower sweep rates, alternate-mode switching becomes visually perceptible.

NOTE

This instrument will not operate in the ALT mode if the horizontal plug-in unit is not operated in the time-base mode.

The TRIG SOURCE switch allows selection of the triggering for an alternate display. When this switch is set to the VERT MODE position, each sweep is triggered by the signal being displayed on the crt. This provides a stable display of two unrelated signals, but does not indicate the time relationship between the signals. In either the LEFT or RIGHT positions of the TRIG SOURCE switch, the two signals are displayed showing true time relationship. However, if the signals are not time-related, the display from the plug-in unit which is not providing a trigger signal will appear unstable on the crt.

http://manuals.hill.com

CHOPPED MODE

The CHOP position of the VERT MODE switch produces a display which is electronically switched between channels at a one-megahertz rate. In general, the CHOP mode provides the best display at sweep rates lower than about 20 milliseconds/division, or whenever dual-trace single-shot phenomena are to be displayed. At faster sweep rates, the chopped switching becomes apparent and may interfere with the display.

Correct internal triggering for the CHOP mode can be obtained in any of the three positions of the TRIG SOURCE switch. When the TRIG SOURCE switch is set to VERT MODE, the internal trigger signals from the vertical plug-in units are algebraically added and the time-base unit is triggered from the resultant signal. Use of the LEFT or RIGHT trigger-source positions triggers the time-base unit on the internal trigger signal from the selected vertical unit only. This allows two time-related signals to be displayed showing true time relationship. However, if the signals are not time-related, the display for the channel which is not providing the trigger signal will appear unstable. The CHOP mode can be used to compare two single-shot, transient, or random signals which occur within the time interval determined by the time-base unit (ten times selected sweep rate). To provide correct triggering, the display which provides the trigger signal must precede the second display in time. Since the signals show true time-relationship, time-difference

measurements can be made from the display.

ALGEBRAIC ADDITION

The ADD position of the VERT MODE switch can be used to display the sum or difference of two signals, for common-mode rejection to remove an undesired signal, or for dc offset (applying a dc voltage to one channel to offset the dc component of a signal on the other channel). The common-mode rejection ratio between the vertical plug-in compartments of the 7633 is greater than 20:1 at 50 megahertz. The rejection ratio increases to 100:1 at dc.

The overall deflection factor on the crt in the ADD mode is the resultant of the algebraic addition of the signals from the two vertical plug-in units. It is difficult to determine the voltage amplitude of the resultant display unless the amplitude of the signal applied to one of the plug-in units is known. This is particularly true when the vertical units are set to different deflection factors, since it is not obvious which portion of the display is a result of the signal applied to either plug-in unit. Also, the polarity and repetition rate of the applied signals enters into the calculation.

The following general precautions should be observed to provide the best display when using the ADD mode:

1. Do not exceed the input voltage rating of the plug-in units.

2. Do not apply large signals to the plug-in inputs. A good rule to follow is not to apply a signal which exceeds an equivalent of about eight times the vertical deflection factors. For example, with a vertical deflection factor of 0.5 volt/division, the voltage applied to that plug-in unit should not exceed 4 volts. Larger voltages may result in a distorted display.

3. To ensure the greatest dynamic range in the ADD mode, set the position controls of the plug-in units to a setting which would result in a mid-screen display if viewed in the LEFT or RIGHT positions of the VERT MODE switch.

4. For similar response from each channel, set the plug-in units for the same input coupling.

TRIGGER SOURCE

The TRIG SOURCE switch allows selection of the internal trigger signal for the time-base unit. For most applications, this switch can be set to the VERT MODE position. This position is the most convenient, since the internal trigger signal is automatically switched as the VERT MODE switch is changed, or as the display is electronically switched between the left vertical and right vertical plug-in units in the ALT position of the VERT MODE switch. It also provides a usable trigger signal in the ADD or CHOP positions of the VERT MODE switch, since the internal trigger signal in these modes is the algebraic sum of the signals applied to the vertical plug-in units. Therefore, the VERT MODE position ensures that the time-base unit receives a trigger signal regardless of the VERT MODE switch setting, without the need to change the trigger source selection.

http://manoman.stphill.com

If correct triggering for the desired display is not obtained in the VERT MODE position, the LEFT or RIGHT positions can be used to obtain the trigger signal from either the left vertical or right vertical plug-in unit. The internal trigger signal is obtained from the selected vertical compartment, whether the plug-in unit in that compartment is selected for display on the crt or not. If the internal trigger signal is obtained from one of the vertical units, but the other vertical unit is selected for display, the internal trigger signal must be time-related to the displayed signal in order to obtain a triggered (stable) display.

X-Y OPERATION

For some applications, it is desirable to display one signal versus another (X-Y) rather than against time (internal sweep). The flexibility of the plug-in units available for use with the 7633 provides a means for applying an external signal to the horizontal deflection system for this type of display. Some of the 7B-series time-base units can be operated as amplifiers in addition to their normal use as time-base generators. This feature allows an external signal to provide the horizontal deflection on the crt. For most of the time-base units with the amplifier function, the X (horizontal) signal can be connected either to an external input connector on the time-base unit or it can be routed to the time-base unit through the internal triggering system (see time-base instruction manual for details). If the latter method is used, the TRIG SOURCE switch must be set so that the X (horizontal) signal is obtained from one of the vertical units and the Y (vertical) signal is obtained from the other vertical unit. The advantages of using the internal trigger system to provide the X signal are that the attenuator switch of the amplifier unit providing the horizontal signal determines the horizontal deflection factor to allow full-range operation. The plug-in units do not have to be removed between compartments when X-Y operation is desired.

http://manomen.schillo.com

Another method of obtaining an X-Y display is to install an amplifier plug-in unit in the horizontal plug-in compartment (check amplifier unit gain as given in the plug-in instruction manual to obtain calibrated horizontal deflection factors). This method provides the best X-Y display, particularly if two identical amplifier units are used, since both the X and Y input systems will have the same delay time, gain characteristics, input coupling, etc. For further information on obtaining X-Y displays, see the plug-in unit manuals. Also, the reference books listed under Applications provide information on X-Y measurements and interpreting the resultant lissajous displays.

INTENSITY MODULATION

Intensity (Z-axis) modulation can be used to relate a third item of electrical phenomena to the vertical (Y-axis) and the horizontal (X-axis) coordinates without affecting the waveshape of the displayed signal. The Z-axis modulating signal applied to the crt circuit changes the intensity of the displayed waveform to provide this type of display. 'Gray scale' intensity modulation can be obtained by applying signals which do not completely blank the display. Large amplitude signals of the correct polarity will completely blank the display; the sharpest display is provided by signals with a fast risetime and fall. The voltage amplitude required for visible trace modulation depends upon the setting of the INTENSITY control. A two-volt peak-to-peak signal will completely blank the display even at high intensity levels. Lower amplitude signals can be used to only change the trace brightness rather than completely blank the display. Negative-going modulating signals increase the display intensity and positive-going modulating signals decrease the

display intensity. Useful input frequency range is dc to 10 megahertz (input voltage derating necessary above two megahertz). The maximum input voltage should be limited to 10 volts (dc plus peak ac).

Time markers applied to the EXT Z AXIS input connector provide a direct time reference on the display. With uncalibrated horizontal sweep or external horizontal mode operation, the time markers provide a means of reading time directly from the display. However, if the markers are not time-related to the displayed waveform, a single-sweep display should be used (for internal sweep only) to provide a stable display.

RASTER DISPLAY

A raster-type display can be used to effectively increase the apparent sweep length. For this type of display, the trace is deflected both vertically and horizontally by sawtooth signals. This is accomplished in the 7633 by installing a 7B-series time-base unit in one of the vertical plug-in compartments. Normally, the time-base unit in the vertical compartment should be set to a slower sweep rate than the time-base unit in the horizontal compartment; the number of horizontal traces in the raster depends upon the ratio between the two sweep rates. Information can be displayed on the raster using several different methods. In the ADD position of the VERT MODE switch, the signal from an amplifier unit can be algebraically added to the vertical deflection. With this method, the vertical signal amplitude on the crt should not exceed the distance between the horizontal lines of the raster. Another method of displaying information on the raster is to use the EXT Z AXIS input to provide intensity modulation of the display. This type of raster display could be used to provide a television-type display. Complete information on operation using the Z-axis feature is given under Intensity Modulation.

http://manoman.sqwill.com

To provide a stable raster display, both time-base units must be correctly triggered. Internal triggering is not provided for the time-base units when they are in the vertical compartments; external triggering must be used. Also, blanking is not provided from the time-base units when they are installed in a vertical compartment. To blank out the retrace portion from the time-base unit in the vertical compartment, special connections must be made from this time-base unit to the blanking network of the 7633. If this mode of operation is desirable, contact your local Tektronix Field Office or representative for specific information on obtaining blanking with the specific time-base unit being used in the vertical compartment.

CALIBRATOR

GENERAL

The internal calibrator of the 7633 provides a convenient signal source for checking basic vertical gain and for adjusting probe compensation as described in the probe instruction manual. In addition, the calibrator can be used as a convenient signal source for application to external equipment.

VOLTAGE

The calibrator provides accurate output voltages of 40 millivolts, 0.4 volt, and 4 volts at the three front-panel pin-jack connectors into high-impedance loads. Output resistance is approximately 50 ohms at the 40 mV and 0.4 V pin jacks and approximately 450 ohms at the 4 V pin jack.

CURRENT

A 40-milliampere, one-kilohertz output current is provided when the optional current-loop accessory (Tektronix Part No. 012-0259-00) is connected between the 4 V pin jack and ground. This output can be used to check and calibrate current-measuring probe systems.

WAVESHAPE

The square-wave output signal of the calibrator can be used as a reference waveshape when checking or adjusting the compensation of passive, high-resistance probes. Since the square-wave output from the calibrator has a flat top, any distortion in the displayed waveform is due to the probe compensation. Dc voltage output is also available by changing a jumper on the calibrator board; see Figure 1-6.

SIGNALS OUT

VERTICAL SIGNAL

The VERT SIG OUT connector provides a sample of the vertical deflection signal. The source of the output signal is determined by the TRIG SOURCE switch. The source will follow the setting of the TRIG SOURCE switch. When the TRIG SOURCE is in the VERT MODE the output will follow the VERTICAL MODE switch. In the CHOP mode the signals are added. The output signals are LEFT, ALT, ADD, and RIGHT. The output signal into 50 ohms is about 25 millivolts/division of the vertical signal displayed on about 0.5 volts/division of the vertical signal displayed on the systems crt.

http://manuals.tpill.com

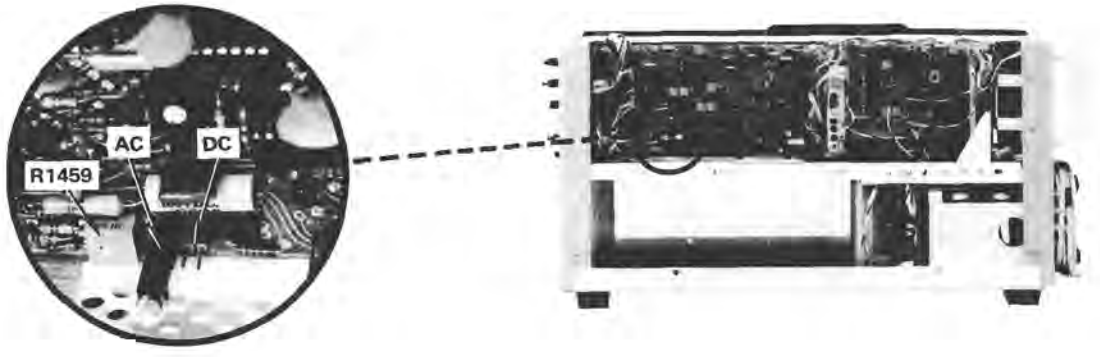

Figure 1-6. Location of Calibrator jumper on Storage circuit board.

+ GATE

The + GATE connector provides a sweep gate signal that is generated by the time-base plug-in unit. The gate selector switch provides one of three possible gates (MAIN, AUXILIARY, and DELAY). The duration of the gate pulse is determined by the respective sweep. Auxiliary and Delay gates can only be produced by dual sweep time-base plug-in units. The amplitude of the gate signal is about 50 millivolts into 50 ohms or 10 volts into 1 megohm.

+ SAWTOOTH

The SAWTOOTH connector provides a positive going sample of the sawtooth from the time-base unit in the horizontal compartment. The rate of rise of the sawtooth signal is about 50 millivolts/unit of time into 50 ohms or 1 volt/unit of time into 1 megohm. Unit of time is determined by the time/division switch of the horizontal plug-in unit.

APPLICATIONS

The 7633 Oscilloscope and its associated plug-in units provide a very flexible measurement system. The capabilities of the overall system depend mainly upon the plug-in units that are chosen for use with this instrument. Specific applications for the individual plug-in units are described in the plug-in manuals. The overall system can also be used for many applications which are not described in detail either in this manual or in the manuals for the individual plug-in units. Contact your local Tektronix Field Office or representative for assistance in making specific measurements with this instrument.

http://manonar.tghu.com

The following books describe oscilloscope measurement techniques which can be adapted for use with this instrument.

John D. Lenk, 'Handbook of Oscilloscopes, Theory, and Application', Prentice-Hall Inc., Englewood Cliffs, New Jersey, 1968.

J. Czech, 'Oscilloscope Measuring Techniques', Springer-Verlag, New York, 1965.

J. F. Golding, 'Measuring Oscilloscopes', Transatlantic Arts, Inc., 1971.

Charles H. Roth Jr., 'Use of the Oscilloscope', A Programmed Text, Prentice-Hall Inc., Englewood Cliffs, New Jersey, 1970.

SPECIFICATIONS

INTRODUCTION

The Tektronix 7633 Storage Oscilloscope is a solid-state, high-performance instrument designed for fast writing rate storage applications. This instrument accepts Tektronix 7-series plug-in units to form a complete measurement system. The flexibility of this plug-in feature and the variety of plug-in units available allow the system to be used for many measurement applications.

This instrument will meet the electrical characteristics listed in the Performance Requirement column of Table 2-1 following complete calibration as given in the Service manual. The following characteristics apply over an ambient temperature range of 0°C to +50°C, except as otherwise indicated. Warmup time for given accuracy is 30 minutes.

NOTE

Many of the measurement capabilities of this instrument are determined by the choice of plug-in units. The following characteristics apply to the 7633 Storage Oscilloscope only. See the System Specifications later in this section for characteristics of the complete system.

http://manophan.sqhill.com

TABLE 2-1
ELECTRICAL

Characteristic	Performance Requirement	Supplemental Information
VERTICAL DEFLECTION SYSTEM		
Deflection Factor	Compatible with all 7000-series plug-in units.	
Between Compartments	Within 1%.	
Low Frequency Linearity	0.1 division or less compression or expansion of a 2-division (at center-screen) signal when positioned vertically within the graticule area.	
Bandwidth	See System Specifications for 7600-series instruments.	
Step Response Risetime	See System Specifications for 7600-series instruments.	
Isolation Between Vertical Compartments	At least 100:1 from DC to 100 MHz.	

TABLE 2-1 (cont.)
ELECTRICAL

Characteristic	Performance Requirement	Supplemental Information
Delay Line		Permits viewing leading edge of trigger signal.
Chopped Mode		
Repetition Rate	1 MHz within 20%.	
Time Segment From Each Compartment	0.4 to 0.6 μs.	
Difference in Delay Between Vertical Compartments		0.5 ns or less.
Vertical Display Modes	LEFT: Left vertical unit only.	Selected by VERT MODE switch.
	ALT: Dual trace, alternate between vertical units.	
	ADD: Added algebraically.	
	CHOP: Dual trace, chopped between vertical units.	
	RIGHT: Right vertical unit only.	
TRIGGERING		
Trigger Source	LEFT VERT: From left vertical only.	Selected by TRIGGER SOURCE switch.
	VERT MODE: Determined by vertical mode switch.	
	RIGHT VERT: From right vertical only.	
HORIZONTAL DEFLECTION SYSTEM		
Fastest Calibrated Sweep Rate	5 ns/division.	
Deflection Factor	Compatible with all 7000-series plug-in units.	

http://manuals.mcgraw-hill.com

TABLE 2-1 (cont.)
ELECTRICAL

Characteristic	Performance Requirement	Supplemental Information
Low Frequency Linearity	0.1 division or less compression or expansion of a 2-division (at center-screen) signal when positioned horizontally within the graticule area.	
Phase Shift Between The Vertical and Horizontal Amplifiers	Less than 2° from dc to 35 kHz.	
Frequency Response Bandwidth (8-Division Reference)	At least 2 MHz.	
CALIBRATOR		
Wave shape	Positive-going square wave or dc (dc voltage selected by internal jumper).	
Voltage Outputs	40 mV, 0.4 V, and 4 V.	Into 1 MΩ load.
Voltage Output Accuracy		
+15°C to +35°C	Within 1%.	
0°C to +50°C	Within 2%.	
Current Output	40 mA.	
Current Output Accuracy		Within optional current loop accessory (012-0259-00) connected between 4 V pin jack and ground pin jack.
+15°C to +35°C	Within 2%.	
0°C to +50°C	Within 3%.	
Repetition Rate		Approximately 1 kHz.
Output Resistance		
50 mV and 0.4 V		Approximately 50Ω.
4 V		Approximately 450Ω.

http://manoman.sqhill.com

TABLE 2-1 (cont.)
ELECTRICAL

Characteristic	Performance Requirement	Supplemental Information
OUTPUTS		
Camera Power (P1041 at crt bezel)		
Pin 1 – +15 V		
Pin 3 – single sweep reset		
Pin 5 – ground		
EXTERNAL Z AXIS INPUT		
Sensitivity (Full Intensity Range)	2 V peak to peak.	
Useful Input Voltage Versus Frequency	2 V peak to peak, dc to 2 MHz; reducing to 0.4 V peak to peak at 10 MHz.	
Polarity of Operation	Positive-going signal decreases intensity.	
Maximum Input Voltage		10 V (dc to peak ac).
Input Resistance		Approximately 500 Ω.
CHARACTER GENERATOR		
Character Size	Adjustable (Vertically Only).	
Modes of Operation	Free-run independent of sweep.	Selected by internal Readout mode switch.
	Triggered after sweep.	
POWER SOURCE		
Line Voltage Ranges		
110 V nominal	100 V ± 10%.	
	110 V ± 10%.	
	120 V ± 10%.	

http://manoman.sqhill.com

TABLE 2-1 (cont.)

ELECTRICAL

Characteristic	Performance Requirement	Supplemental Information
Line Voltage Ranges		
220 V nominal	200 V ± 10%.	
	220 V ± 10%.	
	240 V ± 10%.	
Line Frequency		50 to 60 Hz.
Maximum Power Consumption (115 Vac ; 60 Hz)		7633: 170 W, 1.9 A. R7633: 180 W, 2 A.
Fuse Data		
110 V line (F1000)		3.2 A slow blow.
220 V line (F1000)		1.6 A slow blow.
+130 V Supply (F855)		0.15 A fast blow.
+15 V unregulated		2.0 A fast blow.

http://manoman.sqhill.com

DISPLAY (CRT)

Cathode-Ray Tube Type	T7411.	
Graticule		
Type	Internal and illuminated.	
Area	8 x 10 divisions	
Reduced Scan	8 x 10 divisions in center of faceplate	
Division	0.9 centimeter Full Scan 0.45 centimeter Reduced Scan	
Phosphor	P31	
Accelerating Potential	Approximately 8.5 kV (approximately 10 kV in Reduced Scan).	
BEAMFINDER	Limits display to within graticule area when BEAMFINDER switch is actuated.	

TABLE 2-1 (cont.)
ELECTRICAL

Characteristic	Performance Requirement	Supplemental Information
Stored Writing Speed		
Full Scan (center 6 x 8 divisions)		
FAST VAR PERSIST	150 div/μs	
FAST BISTABLE	50 div/μs	
VAR PERSIST	0.5 div/μs	
BISTABLE	0.03 div/μs	
Reduced Scan		
FAST VAR PERSIST	2222 div/μs	
FAST BISTABLE	400 div/μs	
VAR PERSIST	3 div/μs	
BISTABLE	0.2 div/μs	
SIGNALS OUT		
VERT SIG OUT	See Systems Specifications for 7600-series instruments.	
Vertical Signals	LEFT, RIGHT, ALT and ADD	Selected by TRIG SOURCE switch.
Gain		
Into 50 Ω		25 mV/division ±20% system crt to VERT SIG OUT.
Into 1 MΩ		0.5 V/division ±20% system crt to VERT SIG OUT.
Risetime (Into 50 Ω)		5 ns or less.
Centering		±3 division system crt to VERT SIG OUT. (1.5 V into 1 MΩ or 75 mV into 50 Ω.)
Output Resistance		950 Ω within 2%.

http://manoman.sqhill.com

TABLE 2-1 (cont.)
ELECTRICAL

Characteristic	Performance Requirement	Supplemental Information
+GATE OUT		
Gate Signals	MAIN, AUXILIARY, and DELAY.	Selected by Gate Selector switch.
Output		
Into 50 Ω		0.5 V within 10%.
Into 1 MΩ		10 V within 10%.
Risetime (Into 50 Ω)		20 ns or less.
Output Resistance		950 Ω within 2%.
+SAWTOOTH OUT		
Output		
Into 50 Ω		50 mV/unit time[1] within 15%.
Into 1 MΩ		1 V/unit time[1] within 10%.
Output Resistance		950 Ω within 2%.

http://manoman.sqhill.com

ELECTRO-MAGNETIC INTERFERENCE

Electro-magnetic interference(emi) in accordance with MIL-STD-461A as tested in MIL-STD-462 (when equipped with Option 3)	Any unused plug-in compartments must be covered with a blank plug-in panel (emi shielded) in order to meet emi specifications. See Options section for additional information.	
Radiated interference	Interference radiated from the instrument under test within the given limits from 150 kilohertz to 1000 megahertz.	
Conducted interference	Interference conducted out of the instrument under test through the power cord within the given limits from 150 kilohertz to 25 megahertz.	
Transportation (packaged instrument, without plug-ins)	Qualifies under National Safe Transit Committee test procedure 1A, Category II.	

[1] Referenced to Time/Div setting.

TABLE 2-2
ENVIRONMENTAL

Characteristic	Information
NOTE *This instrument will meet the electrical characteristics given in the Performance Requirement column of the Specifications over the following environmental limits.*	
Temperature Range	
Operating	0°C to +50°C.
Non-Operating	−55°C to +75°C.
Altitude	
Operating	15,000 ft.
Non-Operating	Test limit 50,000 ft.

Transportation (packaged instrument, without plug-in units) qualifies under National Safe Transit test procedure 1A, Category II.

http://manoman.sqhil.com

TABLE 2-3
PHYSICAL

Characteristic	Information
Ventilation	Safe operating temperature maintained by forced cooling. Automatic resetting thermal cutout protects instrument from overheating.
Finish	Anodized aluminum front panel. Painted cabinet.
7633 Overall Dimensions (measured at maximum point)	
Height	12.0 in (30.4 cm).
Width	8.7 in (23.0 cm).
Length	23.7 in (50.2 cm).
Net Weight (instrument only)	30 lb (13.6 kg).

TABLE 2-3 (cont.)

PHYSICAL

Characteristic	Information
R7633 Overall Dimensions (measured at maximum points)	
Height	5.25 in (13.4 cm).
Width	19 in (48.3 cm).
Length	23 in (57.96 cm).
Net Weight (instrument only)	30 lb (13.6 kg).

STANDARD ACCESSORIES

Standard accessories supplied with the 7633 are given in the Mechanical Parts List, in the Service manual. For optional accessories available for use with this instrument, see the Tektronix, Inc., catalog.

http://manoman.sqhill.com

TABLE 2-4

7633 SYSTEM SPECIFICATIONS

Amplifier Plug-In Unit	Probe	Bandwidth	Risetime (Calculated)	Accuracy * EXT CAL 0.25% Acc	Accuracy * INT CAL 15 to 35° C	Accuracy * INT CAL 0 to 50° C	SIG OUT BW	SIG OUT T_r
7A11	Integral	100 MHz	3.5 ns	2%	3%	4%	60 MHz	5.9 ns
7A12	None P6053B	80 MHz 80 MHz	4.4 ns 4.4 ns	2% 3%	3% 4%	4% 5%	55 MHz 55 MHz	6.4 ns 6.4 ns
7A13	None or P6053B or P6055	75 MHz 55 MHz	4.7 ns 6.4 ns	1.5% 1.5%	2.5% 2.5%	3.5% 3.5%	55 MHz 45 MHz	6.4 ns 7.8 ns
7A14	P6021 P6022	50 MHz 80 MHz	7.0 ns 4.7 ns	2% 2%	3% 3%	4% 4%	40 MHz 50 MHz	8.8 ns 7.0 ns
7A15A	None P6065A	65 MHz 60 MHz	5.4 ns 5.4 ns	2% 3%	4% 4%	5% 5%	50 MHz 50 MHz	7.0 ns 7.0 ns
7A16A	None P6053B	100 MHz 100 MHz	3.5 ns 3.5 ns	2% 3%	3% 4%	4% 5%	60 MHz 60 MHz	5.9 ns 5.9 ns
7A17	None	100 MHz	3.5 ns				15 MHz	24 ns
7A18	None P6065A	75 MHz 70 MHz	4.7 ns 4.7 ns	2% 3%	3% 4%	4% 5%	50 MHz 50 MHz	7.0 ns 7.0 ns
7A19	None P6056/ P6057	100 MHz 100 MHz	3.5 ns 3.5 ns	3% 4%	4% 5%	5% 6%	65 MHz 65 MHz	5.4 ns 5.4 ns
7A22	None or P6055/ P6060	1.0 MHz, ±10%	350 ns, ±9%	2%	3%	4%	1.0 MHz, ±10%	350 ns ±9%
7A24	None P6056/ P6057	100 MHz 100 MHz	3.5 ns 3.5 ns				60 MHz 60 MHz	5.9 ns 5.9 ns
7A26	None P6053B	100 MHz 100 MHz	3.5 ns 3.5 ns	2% 3%	3% 4%	4% 5%	60 MHz 60 MHz	5.9 ns 5.9 ns

http://manoman.sqhill.com

***Deflection Factor Accuracy. Plug-in gain set at a temperature within 10°C of the operating temperature.**

Bandwidth checked from 0°C to +50°C.

The bandwidth of a vertical plug-in used in the horizontal compartment is 2 MHz except for the 7A22 which has a bandwidth of 850 kHz. The X-Y phase shift between 2 similar units is 2° at 35 kHz.

THEORY OF OPERATION

This section begins with a brief discussion of logic fundamentals followed by a general, block diagram description and a detailed description of the circuits that comprise the 7633 Oscilloscope. The circuit description is keyed to the schematic diagrams located in the diagrams section of this manual. Circuits commonly used in the electronics industry are not described in detail. If more information on these circuits is desired, refer to the following textbooks:

Robert C. Baron and Albert T. Piccirilli, 'Digital Logic and Computer Operation', McGraw-Hill, New York, 1967.

Phillip Cutler, 'Semiconductor Circuit Analysis', McGraw-Hill, New York, 1964.

Lloyd P. Hunter (Ed.), 'Handbook of Semiconductor Electronics', second edition, McGraw-Hill, New York, 1962.

Jacob Millman and Herbert Taub, 'Pulse, Digital, and Switching Waveforms', McGraw-Hill, New York, 1965.

http://manoman.sqhill.com

LOGIC FUNDAMENTALS

Digital logic techniques are used to perform many functions within this instrument. The function and operation of the logic circuits are described using logic symbology and terminology. This portion of the manual is provided to aid in the understanding of these symbols and terms. The following information is a basic introduction to logic concepts.

SYMBOLS

The operation of circuits within the 7633 which use digital techniques is described using the graphic symbols set forth in military standard MIL-STD-806B. Table 3-1 provides a basic logic reference for the logic devices used within this instrument. Any deviations from the standard symbology, or devices not defined by this standard will be described in the circuit description for the applicable device.

TABLE 3-1

Basic Logic Reference

Device	Symbol	Description	Input/Output Table
AND gate	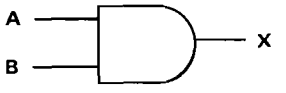	A device with two or more inputs and one output. The output of the AND gate is HI if and only if all of the inputs are at the HI state.	Input / Output A B X LO LO LO LO HI LO HI LO LO HI HI HI
NAND gate	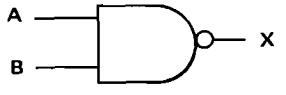	A device with two or more inputs and one output. The output of the NAND gate is LO if and only if all of the inputs are at the HI state.	Input / Output A B X LO LO HI LO HI HI HI LO HI HI HI LO
OR gate	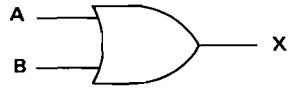	A device with two or more inputs and one output. The output of the OR gate is HI if one or more of the inputs are at the HI state.	Input / Output A B X LO LO LO LO HI HI HI LO HI HI HI HI
NOR gate	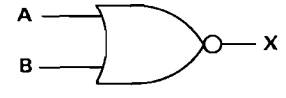	A device with two or more inputs and one output. The output of the NOR gate is LO if one or more of the inputs are at the HI state.	Input / Output A B X LO LO HI LO HI LO HI LO LO HI HI LO

http://manoman.shini.com

TABLE 3-1 (cont)

<table>
<tr><th>Device</th><th>Symbol</th><th>Description</th><th>Input/Output Table</th></tr>
<tr><td>Inverter</td><td> 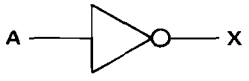
</td><td>A device with one input and one output. The output state is always opposite to the input state.</td><td>
<table>
<tr><th>Input</th><th>Output</th></tr>
<tr><td>A</td><td>X</td></tr>
<tr><td>LO</td><td>HI</td></tr>
<tr><td>HI</td><td>LO</td></tr>
</table>
</td></tr>
<tr><td>LO-state indicator</td><td> 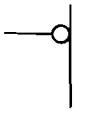
 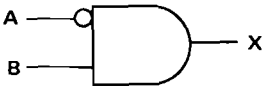

 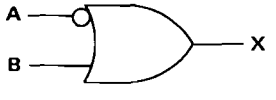
</td><td>A small circle at the input or output of a symbol indicates that the LO state is the significant state. Absence of the circle indicates that the HI state is the significant state. Two examples follow:

AND gate with LO-state indicator at the A input.

The output of this gate is HI if and only if the A input is LO and the B input is HI.

OR gate with LO-state indicator at the A input:

The output of this gate is HI if either the A input is LO or the B input is HI.</td><td>
<table>
<tr><th colspan="2">Input</th><th>Output</th></tr>
<tr><td>A</td><td>B</td><td>X</td></tr>
<tr><td>LO</td><td>LO</td><td>LO</td></tr>
<tr><td>LO</td><td>HI</td><td>HI</td></tr>
<tr><td>HI</td><td>LO</td><td>LO</td></tr>
<tr><td>HI</td><td>HI</td><td>LO</td></tr>
</table>

<table>
<tr><th colspan="2">Input</th><th>Output</th></tr>
<tr><td>A</td><td>B</td><td>X</td></tr>
<tr><td>LO</td><td>LO</td><td>HI</td></tr>
<tr><td>LO</td><td>HI</td><td>HI</td></tr>
<tr><td>HI</td><td>LO</td><td>LO</td></tr>
<tr><td>HI</td><td>HI</td><td>HI</td></tr>
</table>
</td></tr>
<tr><td>Edge symbol</td><td> 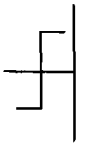
 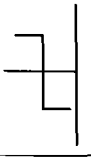 </td><td>Normally superimposed on an input line to a logic symbol. Indicates that this input (usually the trigger input of a flip-flop) responds to the indicated transition of the applied signal.</td><td></td></tr>
<tr><td>Triggered (toggle) Flip-Flop</td><td> 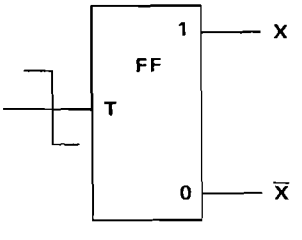
</td><td>A bistable device with one input and two outputs (either or both outputs may be used). When triggered, the outputs change from one stable state to the other stable state with each trigger. The outputs are complementary (i.e., when one output is HI the other is LO). The edge symbol on the trigger (T) input may be of either polarity depending on the device.</td><td>
<table>
<tr><th colspan="2">Input</th><th colspan="2">Output</th></tr>
<tr><td colspan="2">Condition before trigger pulse</td><td colspan="2">Condition after trigger pulse</td></tr>
<tr><td>X</td><td>X</td><td>$\overline{X}$</td><td>$\overline{X}$</td></tr>
<tr><td>LO</td><td>HI</td><td>HI</td><td>LO</td></tr>
<tr><td>HI</td><td>LO</td><td>LO</td><td>HI</td></tr>
</table>
</td></tr>
</table>

http://manoman.ehh.com

TABLE 3-1 (cont)

Device	Symbol	Description	Input/Output Table
Set-Clear (J-K) Flip-Flop	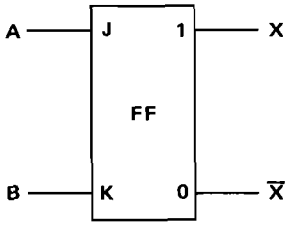	A bistable device with two inputs and two outputs (either or both outputs may be used). The outputs change state in response to the states at the inputs. The outputs are complementary (i.e., when one output is HI the other is LO).	Input / Output A B X $\overline{X}$ LO LO No change LO HI LO HI HI LO HI LO HI HI Changes state
D (data) Type Flip-Flop	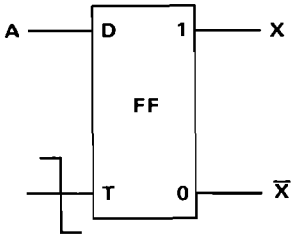	A bistable device with two inputs and two outputs (either or both outputs may be used). When triggered the state of the "1" output changes to the state at the data (D) input prior to the trigger. The outputs are complementary (i.e., when one output is HI the other is LO). The edge symbol on the trigger (T) input may be of either polarity, depending on the device.	Input / Output A X X LO LO HI HI HI LO **Output conditions shown after trigger pulse**
Triggered Set-Clear (J-K) Flip-Flop	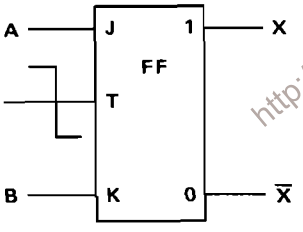	A bistable device with three or more inputs and two outputs (either or both outputs may be used). When triggered, the outputs change state in response to the states at the inputs prior to the trigger. The outputs are complementary (i.e., when one output is HI the other is LO). The edge symbol on the trigger (T) input may be of either polarity depending on the device.	Input / Output A B X X LO LO No change LO HI LO HI HI LO HI LO HI HI Changes state **Output conditions shown after trigger pulse**
Flip-Flop with Direct Inputs (may be applied to all triggered flip-flops)	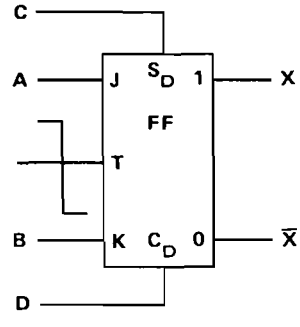	For devices with direct-set (S_D) or direct-clear (C_D) inputs, the indicated state at either of these inputs over-rides all other inputs (including trigger) to set the outputs to the states shown in the input/output table.	Input / Output A B C D X $\overline{X}$ 1 1 LO LO No change[1] Φ Φ LO HI LO HI Φ Φ HI LO HI LO Φ Φ HI HI Undefined Φ = Has no effect in this case [1]Output state determined by conditions at triggered inputs

http://manuman.sqhil.com

NOTE

Logic symbols used on the diagrams depict the logic function and may differ from the manufacturer's data.

LOGIC POLARITY

All logic functions are described using the positive logic. Positive logic is a system of notation where the more positive of two levels (HI) is called the true or 1-state; the more negative level (LO) is called the false or 0-state. The HI-LO method of notation is used in this logic description. The specific voltages which constitute a HI or LO state vary between individual devices.

INPUT/OUTPUT TABLES

Input/output (truth) tables are used in conjunction with the logic diagrams to show the input combinations which are of importance to a particular function, along with the resultant output conditions. This table may be given either for an individual device or for a complete logic stage. For examples of input/output tables for individual devices, see Table 3-1.

NON-DIGITAL DEVICES

Not all of the integrated circuits in this instrument are digital logic devices. The function of non-digital devices will be described individually.

http://mayoman.sqhill.com

BLOCK DIAGRAM

All major circuits and basic interconnections of the 7633 are represented in the block diagram, Figure 3-1. The numbered diamond in each block refers to the respective schematic diagram for that circuit, located at the rear of this manual.

The Main Interface, block 1, provides the interconnections between the plug-in compartments and the various circuits and functions of the instrument.

Signals from both vertical plug-in compartments are applied to the Vertical Interface circuit. This circuit determines whether the signal from the left or right plug-in unit is displayed. The selected vertical signal is then amplified by the Vertical Amplifier circuit to drive the vertical deflection plates of the crt. The Vertical Amplifier also accepts the Y-Readout signal from the Readout System to produce the vertical portion of the alpha-numeric readout display.

Signals from the horizontal plug-in compartment are applied to the Horizontal Amplifier circuit where they are amplified to provide horizontal deflection of the crt electron beam. The Horizontal Amplifier circuit also accepts the X-Readout signal from the Readout System to produce the horizontal portion of the readout display.

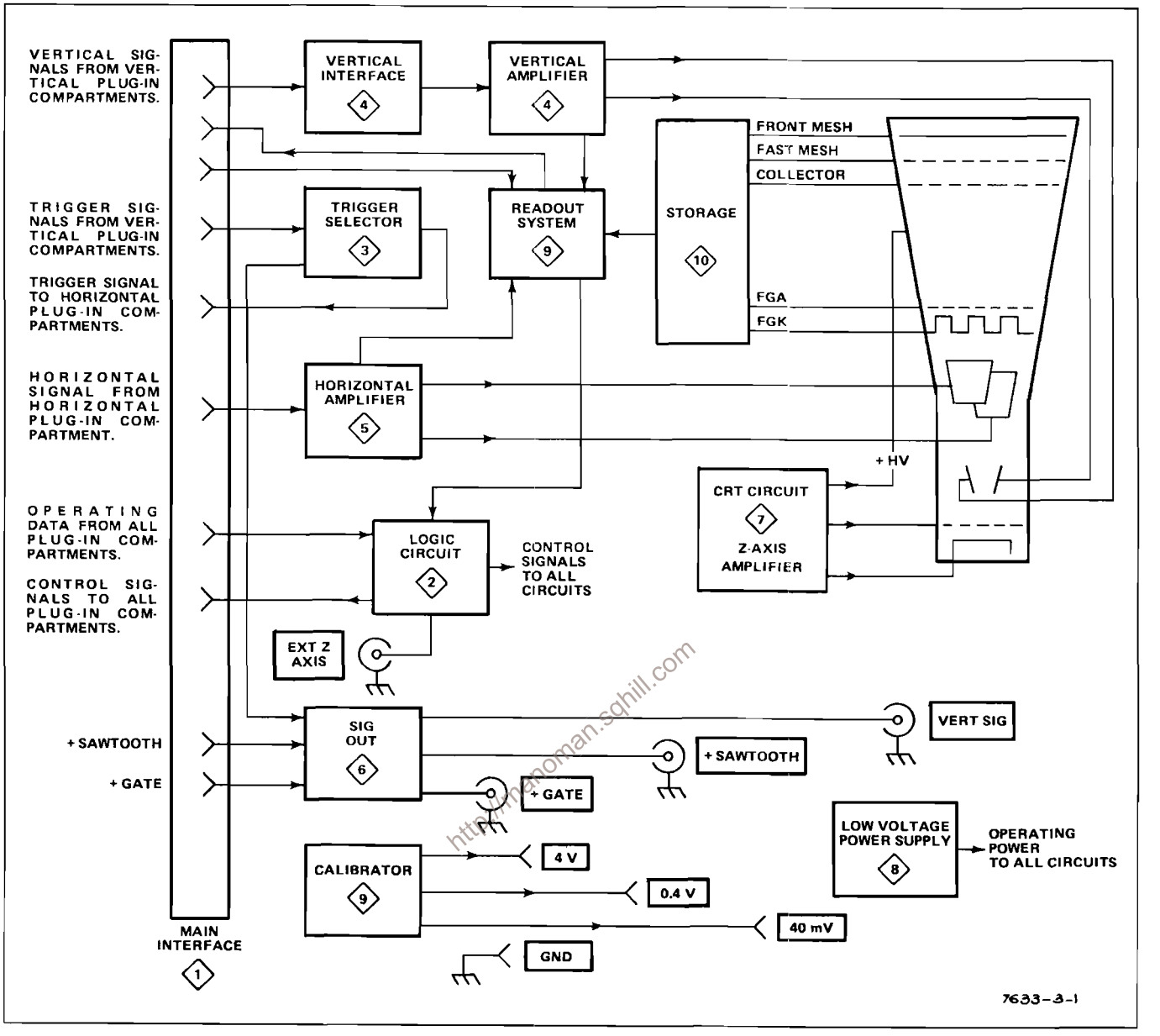

Figure 3-1. Block diagram 7633.

The Logic Circuit develops control signals for use in other circuits within the instrument and the associated plug-in units. These control signals determine the correct operation of the instrument in relation to the plug-in installed or selected, the plug-in control settings, and the 7633 control settings.

Trigger signals from the vertical plug-in units are connected to the Trigger Selector circuit to be used for internal triggering. This circuit selects the trigger signals to be applied to the plug-in unit in the horizontal compartment. This signal is also amplified by the Trigger Selector circuit and routed to the Output Signals circuit to become the Vertical Signal Output.

In addition to the Vertical Signal Output mentioned above, the Output Signals circuit also provides a + SAWTOOTH OUT signal and a + GATE OUT signal—both derived from the horizontal plug-in unit and accessible through rear panel connectors.

The crt circuit produces the voltages and contains the controls necessary for operation of the cathode-ray tube. This includes the Z-Axis Amplifier, which provides the drive signal to control the intensity of the crt display.

The Low-Voltage Power Supply provides the power necessary for operation of the entire instrument and associated plug-in units.

The Storage Circuit produces the timing signals and voltages required to operate the storage functions of the crt.

The Readout System provides an alpha-numeric display for information encoded by the plug-in units. This display is presented on the crt on a time-shared basis with the primary analog waveform display.

http://manoman.sqhill.com

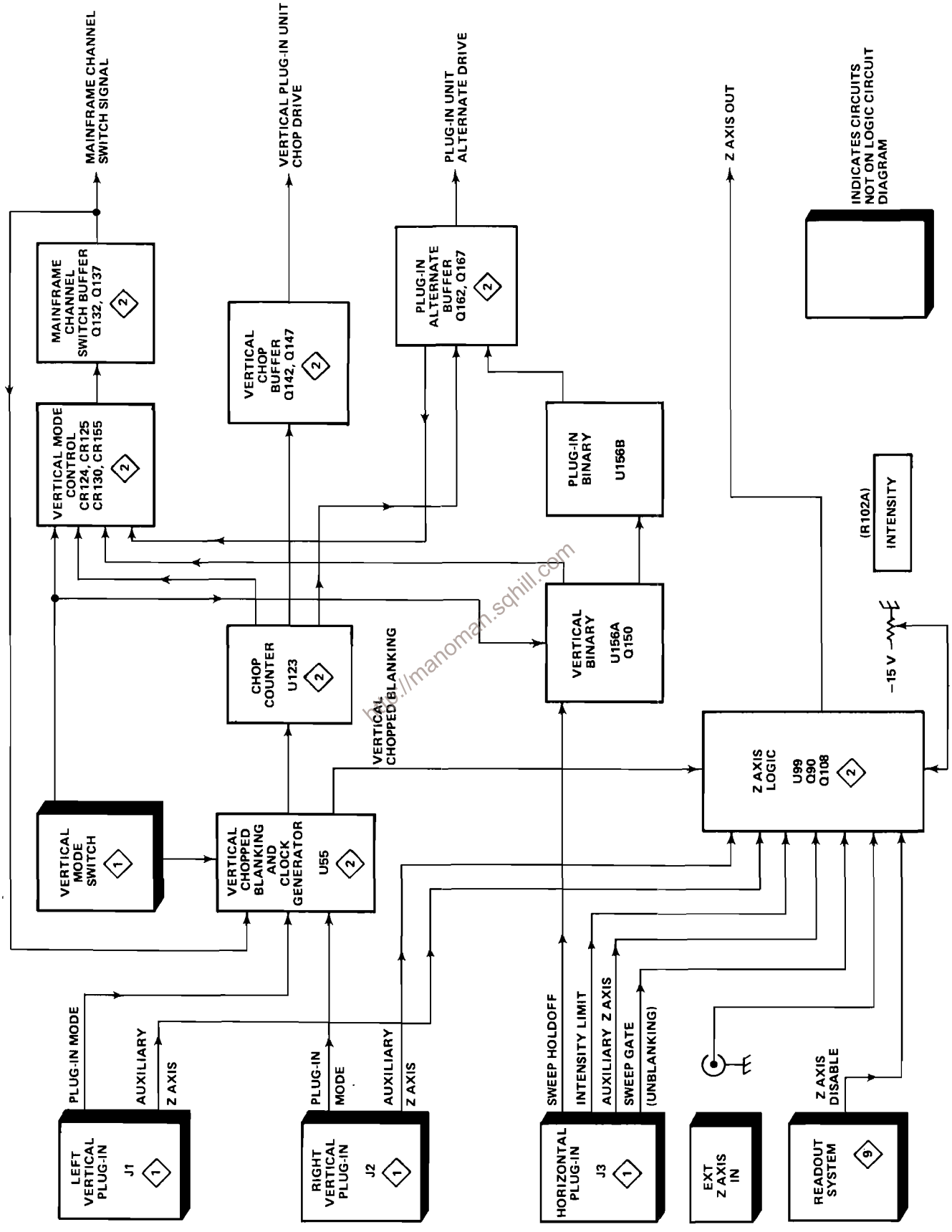

Figure 3-2. Logic circuit block diagram.

THEORY OF OPERATION

The following circuit descriptions are referenced to their respective schematic diagrams by the numbered diamonds accompanying each main heading.

MAIN INTERFACE 1

Diagram 1 shows the plug-in interface and the interconnections between the plug-in compartments, circuit boards, etc., of this instrument. This diagram also contains the TRIG SOURCE and VERT MODE switching and the Camera Power Connector.

LOGIC CIRCUIT 2

The Logic Circuit developes control signals for use in other circuits within this instrument and in the associated plug-in units. These signals determine the correct instrument operation in relation to the plug-in installed and selected, the plug-in control settings, and the 7633 control settings. Figure 3-2 is a simplified block diagram of the Logic Circuit.

Z-AXIS LOGIC

The Z-Axis Logic stage produces an output current which sets the intensity of the display on the crt. The Z-Axis output current is determined by the setting of the front-panel INTENSITY control, an external signal from the rear panel EXT Z-AXIS input connector, or signals from the plug-in compartments. The Vertical Chopped Blanking from U55 is applied to this stage to blank the crt display during vertical trace switching. The Intensity Limit input from the horizontal plug-in compartment operates at slow sweep rates to provide protection for the crt phosphor.

http://manoman.sqhill.com

The Z-Axis Logic stage consists of transistor Q108, dual-transistor Q90 and integrated circuit U99, which is a five-transistor array. A simplified schematic of the Z-Axis Logic stage is shown in Figure 3-3.

Transistor U99C is connected in the common-base configuration to provide the output for this stage. The collector load for U99C is provided by the Z-Axis Amplifier in the CRT Circuit. Transistors U99D and U99E provide a current-setting action for this stage. The collector current of U99D, represented by I_t, is the maximum amount of current that can flow in the circuit. The amount of this current is determined by both the Intensity Limit and Vertical Chopped Blanking. When both of these inputs are HI the collector current of U99D, I_t, is maximum. This maximum level of I_t is determined by current I_1 in the base circuit of U99D established by networks R76-R77 and R62-R63 into R110 and the collector of U99E. During Vertical Chopped Blanking, the respective input level goes LO. This reduces so the collector current of U99D, I_t, drops to blank the crt display during vertical trace switching.

The collector current of U99C, I_s is the difference between I_t and I_2. When the Sweep Gate level at the base of U99A is LO (no sweep in progress) U99A is off. I_2 is at its maximum level so that I_s is minimum to provide minimum intensity of the display (I_s is always = $I_t - I_2$). During sweep time, the Sweep Gate level is HI and turns U99A on by the current established by INTENSITY control R102. As the

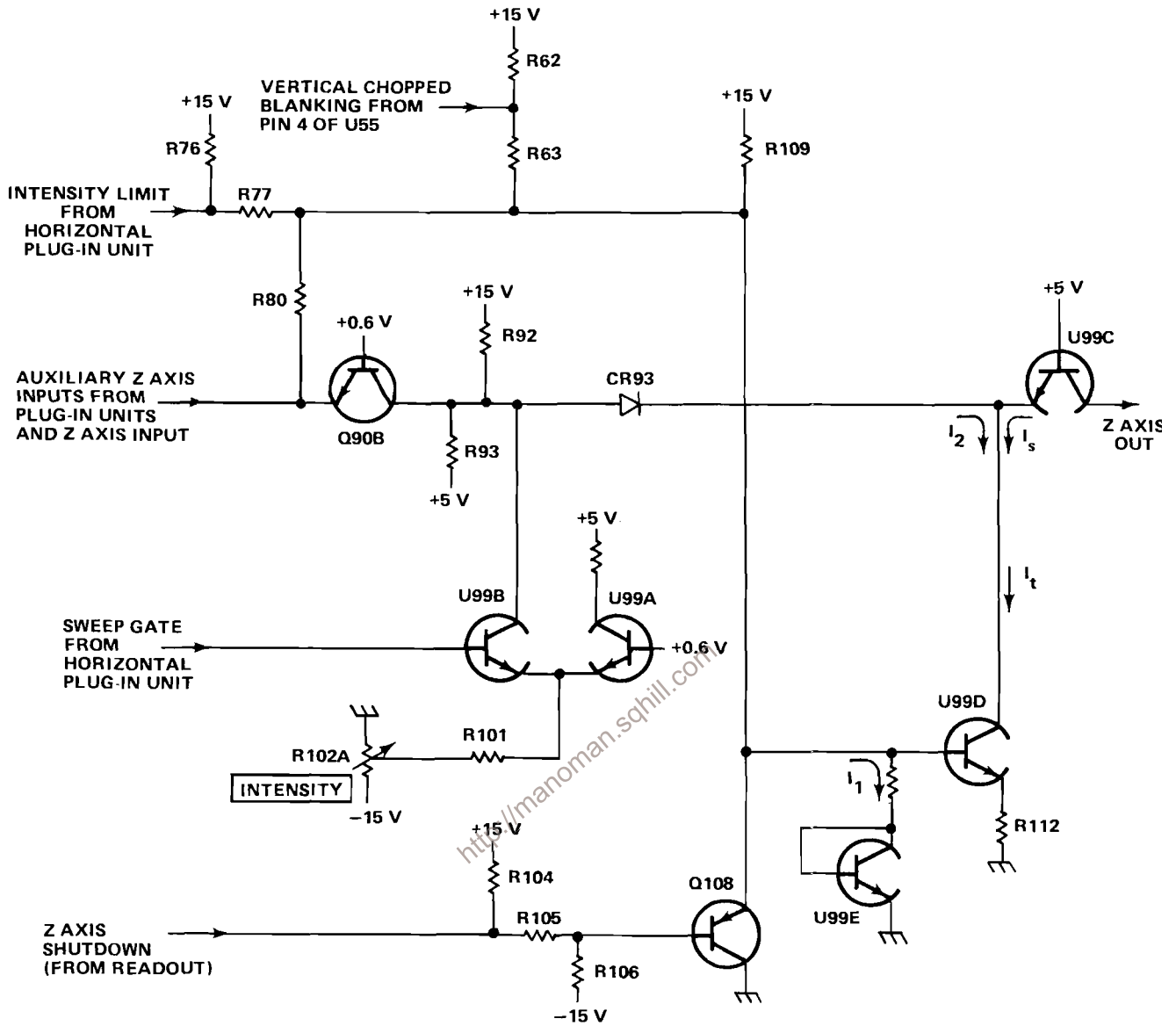

Figure 3-3. Z-Axis logic block diagram.

INTENSITY control is turned toward maximum, the level of I_2 decreases. This allows I_s to increase to produce a brighter display. The Auxiliary Z-Axis Inputs from the plug-in compartments and the intensity modulating signal from the EXT Z-AXIS input connector are connected to the emitter of Q90B. These signals modulate the level of I_2 to, in turn, modulate the intensity of the display.

Through R77 and R78, this causes equal reductions in currents I_1 and I_2 except, because of diode CR93, I_2 cannot be less than zero. This limiting action does not change I_s except to limit its maximum value to this lower I_t value.

When the time-base unit is set to a sweep rate which requires intensity limiting, the Intensity Limit input goes to ground level in the plug-in unit. Through R77 and R78, this causes equal reductions in currents I_1 and I_2 except, because of diode CR93, I_2 cannot be less than zero. This limiting actions does not change I_s except to limit its maximum value to this lower I_t value.

When readout information is to be displayed on the CRT, the Z-Axis shutdown goes LO. This forward biases Q108, and it saturates, shunting I_1 to ground. This reduces the output current to zero during the readout time.

CLOCK GENERATOR

One half of integrated circuit U55 along with the external components shown in Figure 3-4A make up the Clock Generator stage. R1, Q1, Q2, and Q3 represent an equivalent circuit contained within U55A. This circuit, along with discrete components C59, R56, R57, and R59 comprise a two-megahertz, free-running oscillator to provide a timing signal (clock) for mainframe vertical and plug-in chopping.

The stage operates as follows: Assume that Q2 is conducting and Q1 is off. The collector current of Q2 produces a voltage drop across R1 which holds Q1 off. This negative level at the collector of Q2 is also connected to pin 14 through Q3 (see waveforms in Fig. 3-4B at time T_0). Since there is no current through Q1, C59 begins to charge towards −15 volts through R56-R57. The emitter of Q1 goes negative as C59

http://manoman.sqhill.com

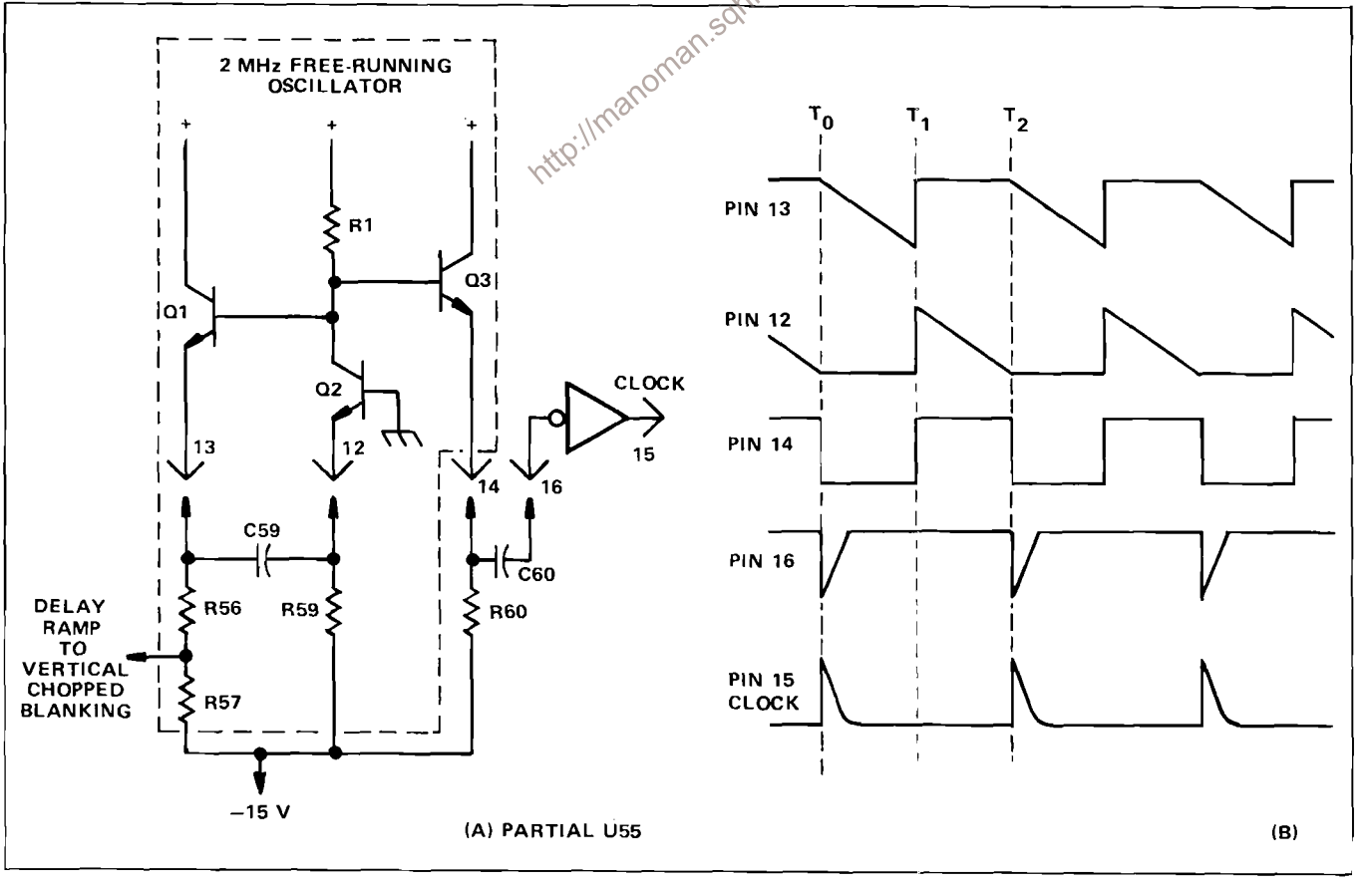

Figure 3-4. (A) Clock Generator stage of U55A. (B) Idealized waveforms from Clock Generator stage.

charges until it reaches a level about 0.6 volt more negative than the level at its base. Then, Q1 is forward biased and its emitter rapidly rises positive. Since C59 cannot change its charge instantaneously, the sudden change in voltage at the emitter of Q1 pulls the emitter of Q2 positive also, to reverse-bias it. With Q2 reverse biased, its collector rises positive to produce a positive output level at pin 14 (see time T_1 on the waveforms).

Now, conditions are reversed. Since Q2 is reverse biased, there is no current through it. Therefore, C59 can begin to discharge through R59. The emitter level of Q2 follows the discharge of C59 until it reaches a level about 0.6 volt more negative than its base. Then Q2 is forward biased and its collector drops negative to reverse-bias Q1. The level at pin 14 drops negative also, to complete the cycle.

Two outputs are provided from this oscillator. The Delay Ramp signal from the junction of R56-R57 is connected to the Vertical Chopped Blanking stage. This signal has the same waveshape as shown by the waveform at pin 13, with its slope determined by the divider ratio between R56-R57. A square-wave output is provided at pin 14. The frequency of this square wave is determined by the RC relationship between C59 and R56, R57, and R59. The duty cycle is determined by the ratio of R56-R57 to R59.

The square wave at pin 14 is connected to pin 16 through C60. C60, along with the internal resistance of U55A, differentiates the square wave from pin 14, to produce a negative-going pulse coincident with the falling edge of the square wave (positive-going pulse coincident with rising edge has no effect on circuit operation). This negative-going pulse is connected to pin 15 through an inverter-shaper which is also part of U55A. The output at pin 15 is a positive-going Clock pulse at a repetition rate of about two megahertz.

http://manoman.sqwill.com

VERTICAL CHOPPED BLANKING

The Vertical Chopped Blanking stage is made up of the remaining half of integrated circuit U55B, Fig. 3-5A. This stage determines if Vertical Chopped Blanking pulses are required, based upon the operating mode of the vertical system or the plug-in units (dual trace units only). Vertical Chopped Blanking pulses are produced if: (1) VERT MODE switch is set to CHOP; (2) dual-trace vertical unit is operating in the chopped mode and that unit is being displayed; (3) dual-trace vertical unit is operating in the chopped mode with the VERT MODE switch set to ADD. The repetition rate of the negative-going Vertical Chopped Blanking pulse output at pin 4 is always two megahertz as determined by the Clock Generator stage.

The Delay Ramp signal from the Clock Generator stage determines the repetition rate and pulse width of the Vertical Chopped Blanking pulses. The Delay Ramp applied to pin 10 starts to go negative from a level of about +1.1 volts coincident with the leading edge of the Clock pulse (see waveforms in Fig. 3-5B). This results in a HI quiescent condition for the Vertical Chopped Blanking pulse. The slope of the negative-going Delay Ramp is determined by the Clock Generator stage. As it reaches a level slightly negative from ground, the Vertical Chopped Blanking pulse output level changes to the LO state. This signal remains LO until the Delay Ramp goes HI again. Notice the delay between the leading edge of the Clock pulse generated by U55A and the leading edge of the Vertical Chopped Blanking pulse would not coincide with the switching between the displayed traces. The duty cycle of the square wave produced in the Clock Generator stage determines the pulse width of the Vertical Chopped Blanking pulses (see Clock Generator discussion for more information).

Whenever this instrument is turned on, the Vertical Chopped Blanking pulses are being produced at a two-megahertz rate. However, these pulses are available as an output at pin 4 only when the remaining inputs to U55B are at the correct levels. The following discussions give the operating conditions which produce Vertical Chopped Blanking pulses to blank the crt during vertical trace switching. Figure 3-5A identifies the functions of the pins of U55B.

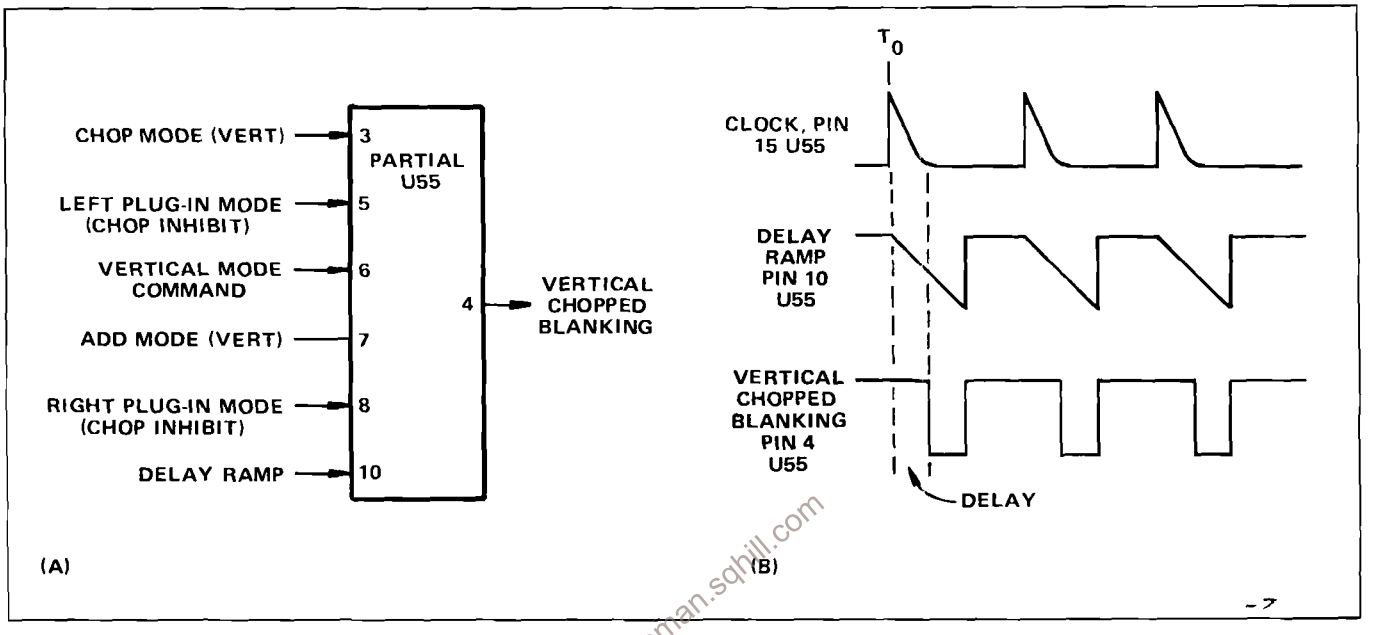

http://manoman.sqhill.com

Figure 3-5. (A) Input and output pins for Vertical Chopped Blanking stage. (B) Idealized waveforms for Vertical Chopped Blanking stage.

CHOP VERTICAL MODE

When the VERT MODE switch is set to CHOP, Vertical Chopped Blanking pulses are available at pin 4 at all times. The input conditions necessary are:

PIN 3 HI – VERT MODE switch set to CHOP.

Pin 7 LO – VERT MODE switch set to any position except ADD.

Pin 10 LO – Delay Ramp more negative than about 0 volts.

LEFT VERTICAL UNIT SET FOR CHOPPED OPERATION

If the Left Vertical unit is set for chopped operation, the setting of the VERT MODE switch determines whether the Vertical Chopped Blanking pulses are available. If the VERT MODE switch is set to the CHOP position, conditions are described above. Operation in the ADD position of the VERT MODE switch is given later. For the LEFT position of the VERT MODE switch, or when the left vertical unit is to be displayed in the ALT mode, Vertical Chopped Blanking pulses are available at all times (two-megahertz rate). The input conditions are:

Pin 3 LO – VERT MODE switch set to any position except CHOP.

Pin 5 LO – Left vertical unit set to chopped mode.

Pin 6 LO – Left vertical unit to be displayed (Vertical Mode Command LO).

http://manoman.sqhk.com

Pin 7 LO – VERT MODE switch set to any position except ADD.

Pin 10 LO – Delay Ramp more negative than about 0 volts.

Notice that the Vertical Mode Command at pin 6 must be LO for output pulses to be available at pin 4. This means that when the VERT MODE switch is set to ALT, Vertical Chopped Blanking pulses are produced only during the time that the left vertical unit is to be displayed (unless right vertical unit is also set for chopped operation).

RIGHT VERTICAL UNIT SET FOR CHOPPED OPERATION

If the right vertical unit is set for chopped mode, operation is the same as described previously for the left vertical unit except that Vertical Chopped Blanking pulses are produced when the VERT MODE switch is set to RIGHT or when the Vertical Mode Command is HI in the ALT mode. The input conditions are:

Pin 3 LO – VERT MODE switch set to any position except CHOP.

Pin 6 HI — Right vertical unit to be displayed (Vertical Mode Command HI).

Pin 7 LO — VERT MODE switch set to any position except ADD.

Pin 8 LO — Right vertical unit set to chopped mode.

Pin 10 LO — Delay Ramp more negative than about 0 volts.

ADD VERTICAL MODE

When the VERT MODE switch is in the ADD position and either or both of the vertical units are operating in the chopped mode, Vertical Chopped Blanking pulses must be available to block out the transition between traces of the vertical units. The input conditions are:

Pin 3 LO — VERT MODE switch set to any position except CHOP.

Pin 5 LO — Left vertical unit set to chopped mode (can be HI if pin 8 is LO).

Pin 7 HI — VERT MODE switch set to ADD.

Pin 8 LO — Right vertical unit set to chopped mode (can be HI if pin 5 is LO).

Pin 10 LO — Delay Ramp more negative than about 0 volt.

http://manoman.skhill.com

Fig. 3-6A shows a logic diagram of the Vertical Chopped Blanking stage. Notice the comparator block on this diagram (one input connected to pin 10). The output of this comparator is determined by the relationship between the levels at its inputs. If pin 10 is more positive (HI) than the grounded input, the output is HI also; if it is more negative (LO), the output is LO. An input/output table for this stage is given in Fig. 3-6B.

CHOP COUNTER

The Chop Counter stage produces the Mainframe Chop Signal and the Vertical Plug-In Chop Signal. The Clock pulse produced by the Clock Generator stage provides the timing signal for this stage. A logic diagram of the Chop Counter, identifying the inputs and outputs, is shown in Fig. 3-7.

The Chop Counter stage consists of integrated circuit U123, a dual D-type flip-flop with direct-set, direct-clear inputs (see Table 3-1 for operation of D-type flip-flop). As connected in this circuit, these D-type flip-flops operate as triggered (toggle) flip-flops.

The two-megahertz clock pulses from the Clock Generator stage are connected to the trigger (T) input of U123B. As connected, U123B changes output states with each positive-going Clock pulse, and the signal as its '1' output is a square wave which switches between the HI and LO levels at a one-megahertz

(A)

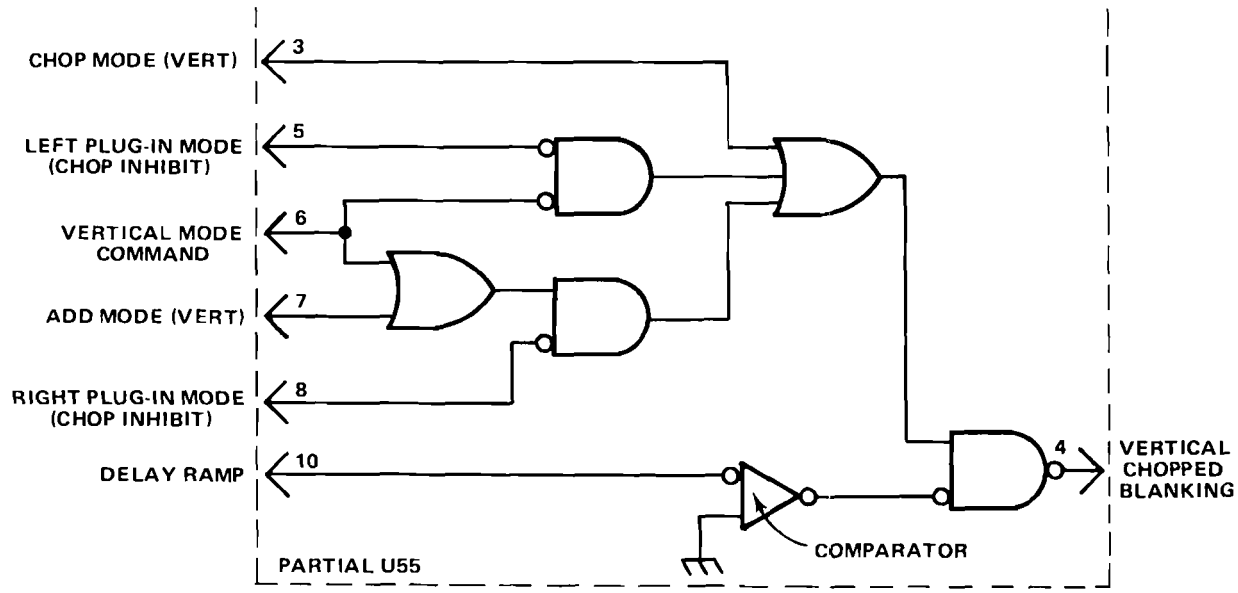

(B)

INPUT						OUTPUT	
CHOP MODE (VERT) 3	LEFT PLUG-IN MODE (CHOP INHIBIT) 5	VERTICAL MODE COMMAND 6	ADD MODE (VERTICAL) 7	RIGHT PLUG-IN MODE (CHOP INHIBIT) 8	DELAY RAMP 10[1]	VERTICAL CHOPPED BLANKING 4[2]	CONDITIONS
HI	Φ	Φ	LO	Φ	LO	LO	CHOP MODE (VERTICAL)
LO	LO	LO	LO	Φ	LO	LO	LEFT PLUG-IN CHOPPED
LO	Φ	HI	LO	LO	LO	LO	RIGHT PLUG-IN CHOPPED
LO	LO[3]	Φ	HI	LO[3]	LO	LO	ADD MODE, LEFT OR RIGHT PLUG-IN CHOPPED
ALL OTHER COMBINATIONS						HI	NO VERTICAL CHOPPED BLANKING PULSES AT OUTPUT

Φ = HAS NO EFFECT IN THIS CASE.

[1] RAMP SIGNAL; CONSIDERED LO WHEN MORE NEGATIVE THAN ABOUT ZERO VOLTS.

[2] NEGATIVE-GOING PULSE AT TWO MEGAHERTZ RATE.

[3] PIN 5 CAN BE HI AND NOT AFFECT OPERATION IF PIN 8 IS LO, AND VICE VERSA.

Figure 3-6. (A) Logic diagram for Vertical Chopped Blanking stage. (B) Table of input/output combinations for Vertical Chopped Blanking stage.

rate. This signal is connected to the Vertical Mode Control stage to provide the Vertical Mainframe Chop Signal. It is also connected to the trigger input of U123A. U123A also changes output states with each positive-going pulse at its trigger input to produce a 500 kilohertz square wave at its '1' output. The output from U123A provides the Vertical Plug-In Chop Signal to the Plug-In Chop Buffer stage. Idealized waveforms showing the timing relationship between the input and output signals for this stage are shown in Fig. 3-8.

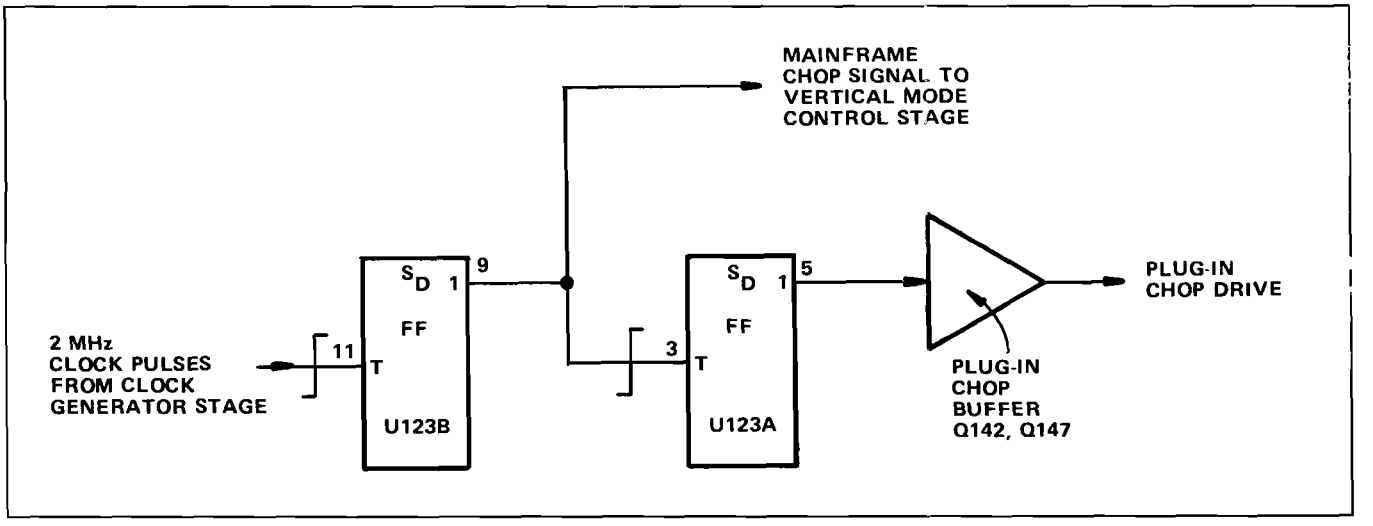

Figure 3-7. Detailed logic diagram of Chop Counter stage.

VERTICAL MODE CONTROL

The Vertical Mode Control stage is made up of discrete components CR124-CR125, CR126, CR130-CR155, CR172, and buffer amplifier Q132-Q137. These components develop the Mainframe Vertical Mode Command which is connected to the Main Interface circuit (vertical plug-in compartments and trigger selection circuitry) and the Vertical Interface circuit to indicate which vertical unit is to be displayed. When this output level is HI, the right vertical unit is displayed and when it is LO, the left vertical unit is displayed.

http://manoman-sphill.com

The VERT MODE switch located on diagram 1 provides control levels for this stage. This switch provides a HI level on only one of four output lines to indicate the selected vertical mode; the remaining lines are LO. The fifth mode, LEFT, is indicated when all four output lines are LO. Operation of this stage in all positions of the VERT MODE switch is as follows:

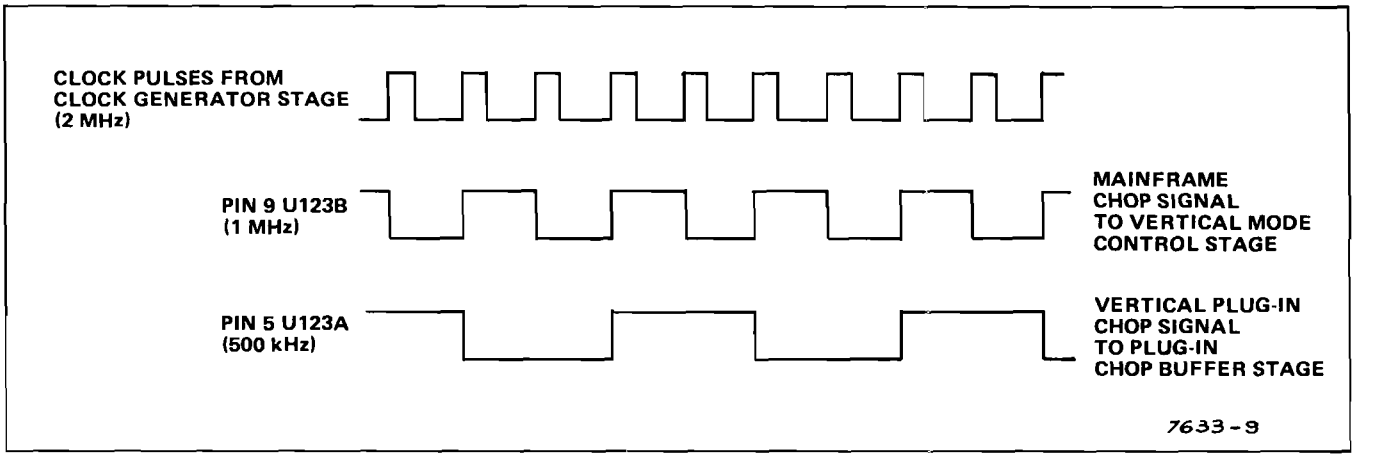

Figure 3-8. Idealized input and output waveforms for Chop Counter stage.

RIGHT

When the VERT MODE switch is set to RIGHT, a HI level is connected to the Buffer Amplifier through R126 and CR126. The LO level at the anodes of diodes CR125 and CR130 holds them reverse biased. The resultant Vertical Mode Command output from the Vertical Mode Buffer Amplifier is a HI level to indicate that the right vertical unit is to be displayed.

CHOP

In the CHOP position of the VERT MODE switch, a HI level is applied to the anodes of diodes CR124-CR125 through R125. Both diodes are forward biased so the Vertical Chop Signal from pin 9 of U123B can pass to the emitter of Q132. This signal switches between the HI and LO levels at a one-megahertz rate and it produces a corresponding Mainframe Vertical Mode Command output at the emitter of Q137. When this output is HI, the right vertical unit is displayed and when it switches to LO, the left vertical unit is displayed.

ALT

In the ALT mode, the VERT MODE switch applies a HI level to the anodes of diodes CR130-CR155 through R130. These diodes are forward biased so the Display Right Command from pin 5 of U156A can pass to the emitter of Q132 to determine the Mainframe Vertical Mode Command level. The Display Right Command switches between its HI and LO levels at a rate determined by the Vertical Binary stage.

http://manomanuals.com

ADD AND LEFT

The control levels in the ADD and LEFT positions of the VERT MODE switch are not connected to this stage. However, since only the line corresponding to the selected vertical mode can be HI, the RIGHT, CHOP, and ALT lines must remain at their LO level when either LEFT or ADD are selected. Therefore, the emitter of Q132 remains LO to produce a LO Mainframe Vertical Mode Control output level. Final control of LEFT or ADD mode is made by the Vertical Interface circuit.

A logic diagram of the Vertical Mode Control stage is shown in Fig. 3-9. The discrete components which make up each logic function are identified. The gate connected to the input of the Vertical Mode Buffer Amplifier is a phantom-OR gate. A phantom-OR gate performs the OR logic function merely by interconnection of the three inputs.

VERTICAL BINARY

The Vertical Binary stage consists of integrated circuit U156A and transistor Q150. U156A is a D-type flip-flop with direct-set and direct-clear inputs (see Table 3-1 for operating details). The connection between the "O" output and the data (D) input enables this flip-flop to operate in the triggered mode. A logic diagram of the Vertical Binary stage is shown in Fig. 3-10.

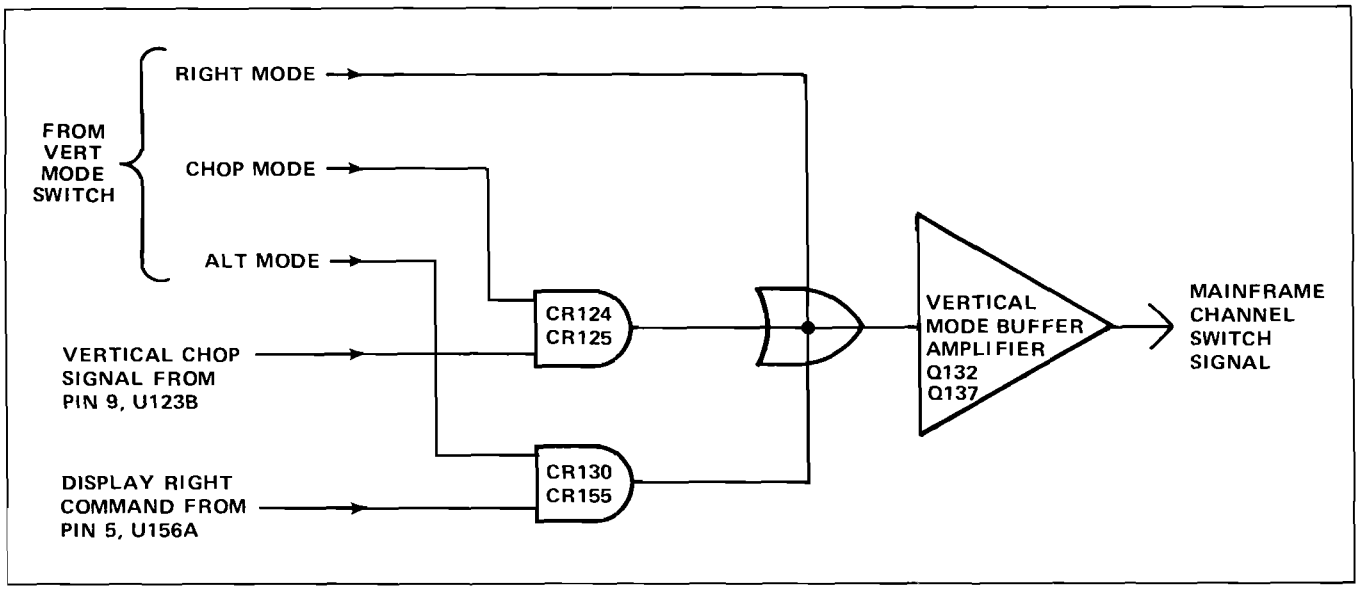

Figure 3-9. Logic diagram of Vertical Mode Control and Vertical Mode Buffer Amplifier stages.

The operation of the Vertical Binary stage is controlled by the level of the ALT Mode line from the VERT MODE switch. When this switch is set to ALT, a HI level is connected to the emitter of Q150 through R152. This HI level disables Q150 so its collector remains HI. As a result, Q150 has no effect upon operation of the Vertical Binary stage and the direct-clear input of U156A remains HI so it does not affect the operation of U156A. Therefore, U156A operates as a basic triggered flip-flop which changes output states with each positive-going Sweep Holdoff pulse at the trigger (T) input. The Sweep Holdoff pulse goes positive at the end of each sweep. The signal at the '1' output of U156A switches between the HI and LO level at one-half the rate of the Sweep Holdoff signal from the horizontal plug-in unit. Fig. 3-11 shows the time relationship between the input and output signals for this stage, and gives the resultant display with each signal combination.

http://manuals.tekhill.com

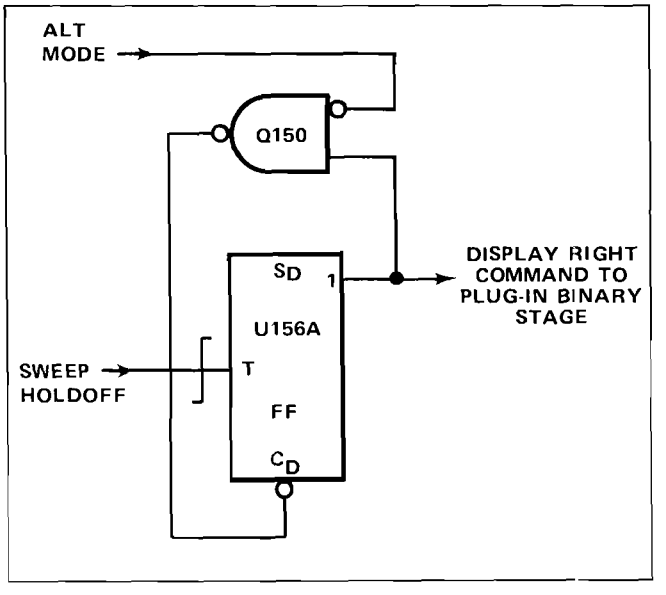

Figure 3-10. Logic diagram of Vertical Binary stage.

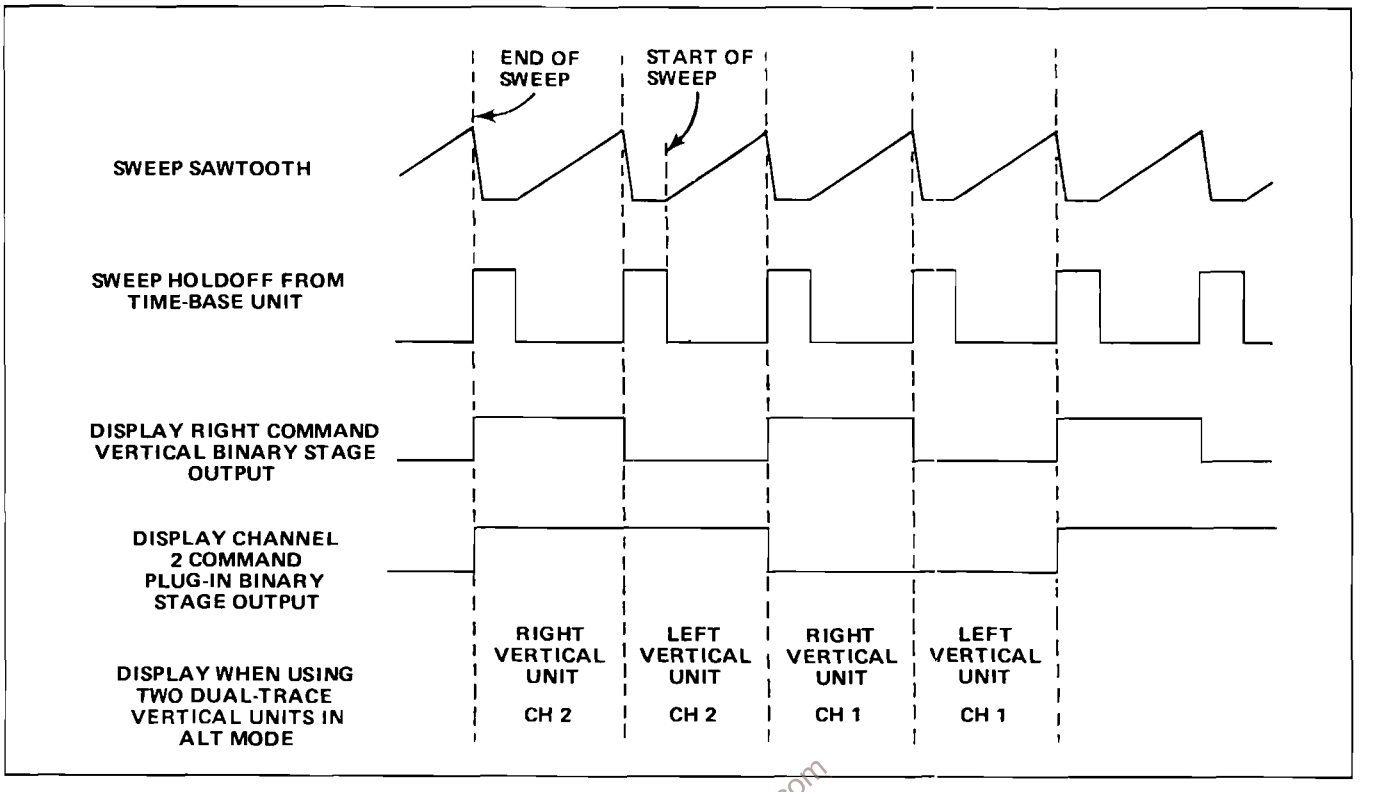

Figure 3-11. Idealized waveforms showing relationship between input and output waveforms for Vertical Binary and Plug-In Binary stages when operating in ALT mode.

http://manoman.sqhill.com

For any other position, the emitter of Q150 is pulled LO by the ALT Mode command from the VERT MODE switch. This enables Q150, but it does not change output state unless the level at the '1' output of U156A is HI. Quiescently, the output of Q150 is HI. Therefore, when the positive-going Sweep Hold-off pulse is received at the end of the sweep, the '1' output of U156A goes HI. This activates Q150 and its output goes LO to provide a direct-clear reset to U156A. The '1' output of U156A is reset to its LO level, and Q150 is again disabled so its output returns to the HI level. The stage is now ready for the next positive-going Sweep Hold-off pulse. The action is the same with each pulse, so the signal at the output of this stage is at the same repetition rate as the Sweep Holdoff input. Therefore, this stage is now operating as a divide-by-one counter rather than a divide-by-two counter as described previously. The output under this condition is used only by the Plug-In Binary stage.

Since the Vertical Binary stage can change output states only at the end of each sweep, there will be no Alternate Drive signal for either the mainframe or vertical plug-in units if a sweep is not being produced by the horizontal plug-in unit.

PLUG-IN BINARY

The Plug-In Binary stage consists of U156B, which is connected as a triggered flip-flop with direct-set input. The trigger input for this stage is the Display Right Command from the Vertical Binary stage. When the VERT MODE switch is set to ALT, the repetition rate of the Display Channel 2 Command output of this stage is one-fourth of the Sweep Holdoff input (see waveforms in Fig. 3-11). For any position of the VERT MODE switch except ALT, the repetition rate of the output signal from this stage is one-half of the Sweep Holdoff input. A logic diagram of the Plug-In Binary stage is shown in Fig. 3-12.

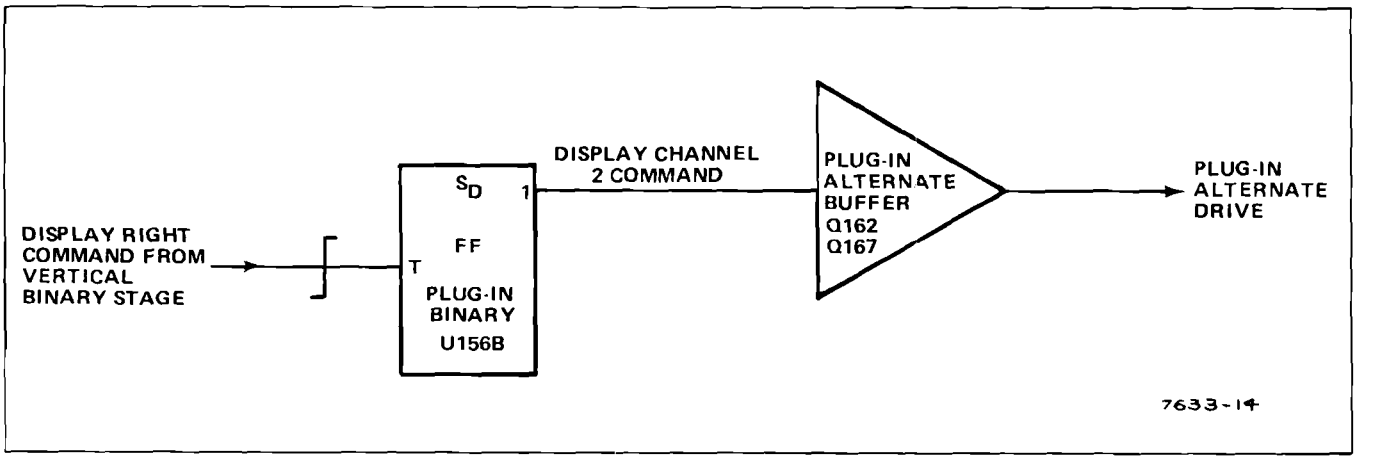

Figure 3-12. Logic diagram of Plug-In Binary and Plug-In Alternate Buffer stage.

OUTPUT BUFFERS

The output switching commands from the Logic circuit are provided through buffer stages Q142,Q137, Q142-Q147, Q162-Q167, and Q182-Q187. Each of these stages includes a common-base input transistor to provide a low-impedance load for the associated driving stages. The output transistor is connected as an emitter-follower to provide isolation between the Logic circuit and other circuits within this instrument or the plug-in units.

TRIGGER SELECTOR 3

The Trigger source switch determines which vertical signal is connected to the time-base unit, and which vertical signal, that is provided at VERT SIG/OUT connector on the rear panel. Fig. 3-13 shows a detailed block diagram of the Trigger Selector circuit, along with a simplified diagram of all the circuitry involved in selection of the trigger source. A schematic of the Trigger Selector circuit is shown on diagram 3 at the rear of this manual.

http://manoman.sqhill.com

TRIGGER MODE AND ADD SIGNALS

GENERAL

The circuitry shown on the left side of the simplified diagram in Fig. 3-13 determines the operation of the Trigger Channel Switch stage. TRIG SOURCE switch S1011 controls Trigger Channel Switch U324. When the TRIG SOURCE switch is set to the VERT MODE position, the setting of the VERT MODE switch determines the trigger selection. In the LEFT or RIGHT positions, the trigger signal is obtained from the indicated vertical unit. The following discussions give detailed operation in each position of the TRIG SOURCE switch.

VERT MODE

In the VERT MODE position of the TRIG SOURCE switch, the setting of the VERT MODE switch determines the operation of the Trigger Channel Switch stage. In the LEFT position of the VERT MODE switch, the base of Q314 is connected to ground through the ALT and RIGHT sections of S1021, CR1021 and CR1026, and S1011. This holds Q314 reverse biased to provide a LO level to pin 4 of U324 (see Fig. 3-14).

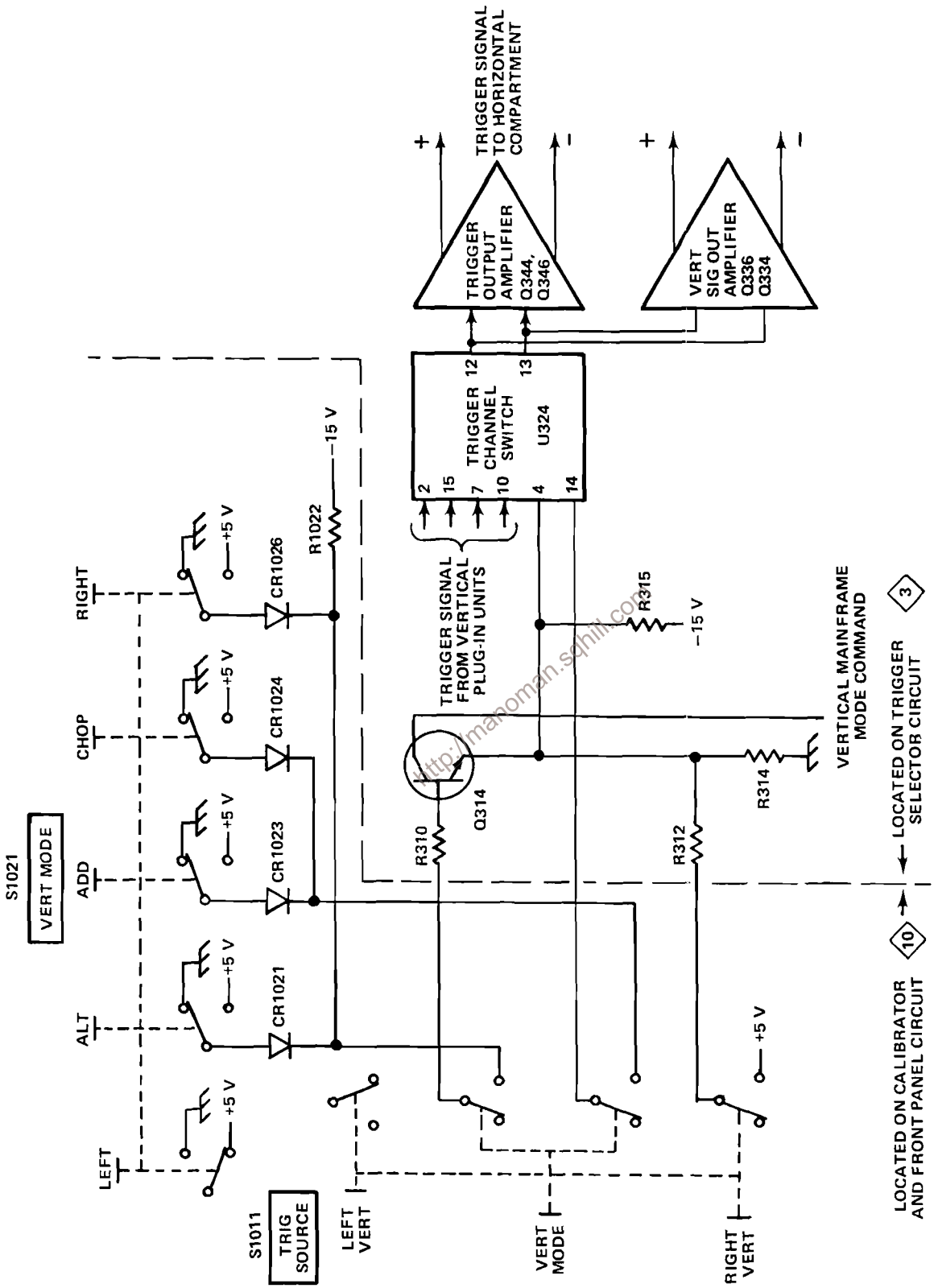

Figure 3-13. Detailed block diagram of Trigger Selector circuit along with simplified diagram of trigger source selection circuitry.

When the VERT MODE switch is set to ALT, +5 volts is applied to the base of Q314 through CR1021 and S1011. Q314 is forward biased and its emitter level is determined by the Mainframe Vertical Mode Command signal from the Logic circuit applied to its collector. This signal switches between the HI level (Right Vertical unit to be displayed) and the LO level (Left Vertical unit to be displayed) at the end of each sweep. When the Mainframe Vertical Mode Command is HI, it provides a positive collector voltage to Q314. Q314 is saturated due to CR1021, and its emitter level is very near the collector level. This provides a HI output level to the Trigger Channel Switch stage. As the Mainframe Vertical Mode Command goes LO, the collector supply for Q314 also goes negative. Q314 remains saturated and the output again follows the collector level to supply a LO output level to U324.

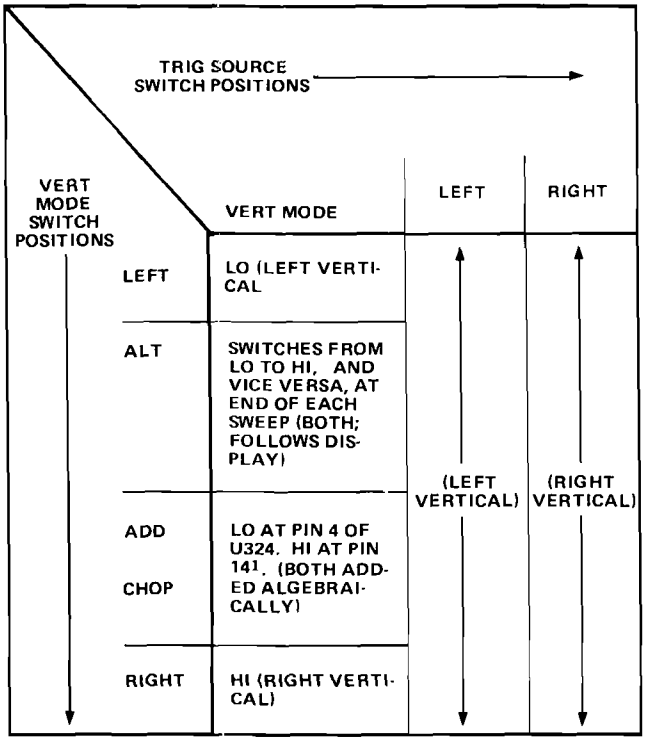

[1] PIN 14 LO FOR ALL OTHER CONDITIONS.

Figure 3-14. Input levels at pin 4 of U324.

For ADD and CHOP vertical mode operation, +5 volts is connected to pin 14 of U324 through CR1023 or CR1024 and S1011. At the same time, the base of Q314 is held LO by the ground connection through the ALT and RIGHT section of S1021 so the level at pin 4 of U324 is LO also (produces an ADD mode in Trigger Channel Switch; see description of this circuit which follows). In the RIGHT position of the VERT MODE switch, +5 volts is connected to the base of Q314 through CR1026 and S1011 to forward-bias the transistor. The Mainframe Vertical Mode Command signal connected to the collector of Q314 is also HI in this mode, and a HI output level is produced at the emitter of Q314.

http://manuman.sqhill.com

LEFT

When the LEFT trigger source is selected, the VERT MODE switch is disconnected from the trigger selector circuitry. Now the ground connection through the RIGHT section of S1011 establishes a LO output level at the emitter of Q314.

RIGHT

In the RIGHT position of the TRIG SOURCE switch, +5 volts is connected to the emitter of Q314 through S1011 and R312. This produces a HI output level to the Trigger Channel Switch stage.

TRIGGER CHANNEL SWITCH

The Trigger Channel Switch stage determines which input signal provides the trigger signal to the horizontal compartment as controlled by the Trigger Mode and ADD signals from the trigger selection circuitry. Refer to diagram 3 during the following discussion.

Resistors R317-R319 establish the input resistance and provide a load for the trigger signal from the right vertical plug-in unit. Resistors R307 and R308 provide the input resistance and load for the left vertical plug-in unit. R321-R323-R324 and R326-R327-R328 establish the operating level of the Trigger Channel Switch; R321-R323 and R326-R328 set the current gain for each channel. This stage is made up primarily of integrated circuit U324. An input/output table for U324 is shown in Fig. 3-15. U324 provides a high impedance differential input for the trigger signal from the left vertical unit at pins 2 and 15, and for the trigger signal from the right vertical unit at pins 7 and 10. The output signal at pins 12 and 13 is a differential signal. The sum of the dc current at pins 12 and 13 is always equal to the sum of the dc currents at pins 1, 8, 9, and 16 in all modes. This provides a constant dc bias to the stages which follow as the TRIG SOURCE or the VERT MODE switches are changed.

When the level at pin 4 is LO (see Trigger Mode and ADD Signals discussion and Fig. 3-15), the trigger signal from the left vertical unit passes to the output, while the trigger signal from the right vertical unit is blocked. A HI level at pin 4 connects the trigger signal from the right vertical unit to the output and the trigger signal from the left vertical unit is blocked. For VERT MODE operation in the ALT position of the VERT MODE switch, the level at pin 4 switches between the LO and HI level at a rate determined by the Vertical Binary stage (see Logic circuit description). This action obtains the trigger signal from the left vertical unit when the left vertical unit is being displayed and from the right vertical unit when it is being displayed.

INPUT		OUTPUT
TRIGGER MODE SIGNAL (4)	TRIGGER ADD (14)	TRIGGER OUTPUT SIGNAL (12,13)
LO	LO	LEFT TRIGGER SIGNAL
HI	LO	RIGHT TRIGGER SIGNAL
LO	HI	BOTH (ADDED ALGEBRAICALLY)

Figure 3-15. Input/output table for Trigger Channel Switch stage.

When the level at pin 4 is LO and the level at pin 14 is HI, the trigger signal from both the left and right vertical units passes to the output pins. This condition occurs only when the TRIG SOURCE switch is set to VERT MODE and the VERT MODE switch is set to either ADD or CHOP. Under this operating mode, the trigger output signal is the algebraic sum of the trigger input signals from the left and right vertical units to prevent triggering on the vertical chopping transition, or only on one signal of an added display.

TRIGGER OUTPUT AMPLIFIER

The trigger output at pins 12 and 13 of U324 is connected to the bases of Q344-Q346 to provide the internal trigger signal for the horizontal unit (via the Main Interface circuit). The horizontal unit provides a 50-ohm differential load for this stage. If it is removed from its compartment, the collector load for Q344-Q346 changes and the voltage at their collectors increases. This stage prevents this change from affecting the Vertical Signal to the Output Signal board. CR341 and CR349 clamp the collectors of Q344 and Q346 at about +0.6 volt to prevent these transistors from saturating under this no-load condition.

http://manoman.sdf.com

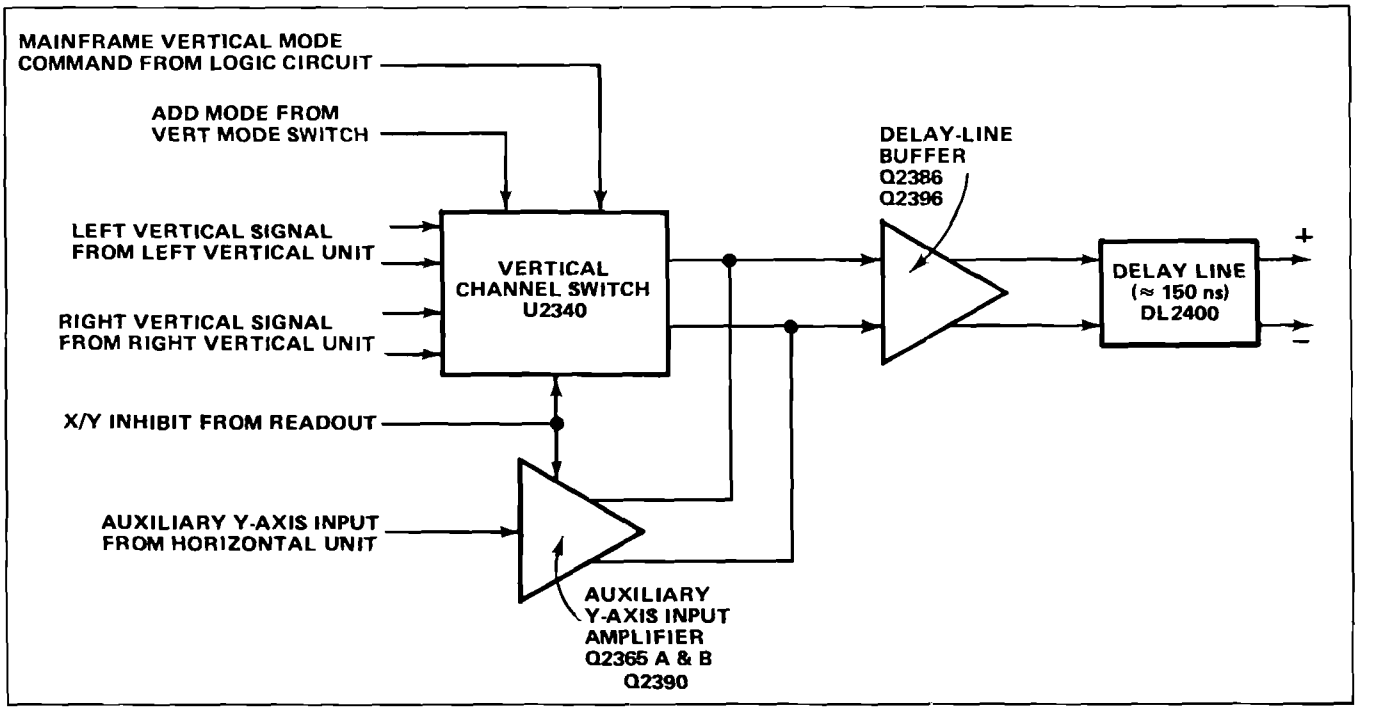

Figure 3-16. Vertical Interface detailed block diagram.

http://manuals.tektronix.com

VERTICAL SIGNAL BUFFER

The trigger output signal at pin 12 and 13 of U324 is also connected to the emitter of a common-base amplifier Q336 and Q334. The output signal at the collector of Q336 and Q334 is connected to the signals out board.

VERTICAL INTERFACE ◇4◇

The Vertical Interface circuit selects the vertical deflection signal from the output of the left or right vertical plug-in unit. Figure 3-16 is a detailed block diagram of the Vertical Interface circuit. A schematic of this circuit is shown on diagram 4.

VERTICAL CHANNEL SWITCH

The Vertical Channel Switch stage (controlled primarily by the Mainframe Vertical Mode Command from the Logic circuit) determines which vertical signal is to be sent to the Delay-Line Driver stage. Resistors R2333-R2335 and R2337-R2339 establish the input resistance of this stage and provide a load for the left and right vertical units. Resistors R2347-R2349 and R2357-R2359-R2329 establish the operating levels for this stage. R2343 and R2353 set the current gain for each channel. C2345-R2345 and C2355-R2355 provide frequency compensation.

The Vertical Channel Switch stage is made up primarily of integrated circuit U2340, which is the same type as used for the Trigger Channel Switch. An input/output table for U2340 is shown in Figure 3-17. U2340 provides a high impedance differential input for the signal from the left vertical unit at pins 2 and 15, and the signal from the right vertical unit at pins 7 and 10. The output signal at pins 12 and 13 is a differential signal that is connected to the Delay-Line Driver stage through R2366-R2376. The sum of the dc output currents at pins 12 and 13 is always equal to the sum of the dc input currents at pins 1, 8, 9, and

16 in all modes. This provides a constant dc bias to the following stage as the VERT MODE switch is changed.

When the VERT MODE switch is set to LEFT, the level at pin 4 is LO. This level allows the signal from the left vertical unit to pass to the output while the signal from the right vertical unit is blocked. In the RIGHT position of the VERT MODE switch, the level at pin 4 is HI. Now, the signal from the right vertical unit is connected to the output while the signal from the left vertical unit is blocked.

INPUT			OUTPUT
MAINFRAME VERTICAL MODE COMMAND	ADD MODE (VERT)	X-Y SHUTDOWN (OFF)	OUTPUT SIGNAL
4	14	6	12, 13
LO	LO	LO	LEFT VERTICAL SIGNAL
HI	LO	LO	RIGHT VERTICAL SIGNAL
LO	HI	LO	BOTH (ADDED ALGEBRAICALLY)
LO	LO	HI	NEITHER (OFF)

LO ≈ −0.6 V HI ≈ +1.1 V

Figure 3-17. Input/output table for Vertical Channel Switch.

When the VERT MODE switch is set to either ALT or CHOP, the Mainframe Vertical Mode Command at pin 4 switches between the LO and HI levels at a rate determined by either the Chop Counter or the Vertical Binary stages (see Logic circuit description). This action allows the signal from the left vertical unit to be displayed when the Mainframe Vertical Mode Command is LO and the signal from the right vertical unit is displayed when the Mainframe Vertical Mode Command is HI. When ADD vertical mode operation is selected, a HI level is applied to pin 14 and the level at pin 4 is LO as determined by the Vertical Mode Control stage in the Logic Circuit. This allows both the right and left vertical signals to pass to the output pins. Now, the signal from both vertical units is algebraically added and the resultant signal determines the vertical deflection.

http://manuals.sqlill.com

The X/Y Inhibit signal from the Readout system is applied to pin 6 of U2340. It has final control over the output signal from U2340. When the X/Y Inhibit signal is LO, the signal from the selected vertical can pass to the output pins 12 and 13. However, when the Readout system is ready to display Readout information, the level at pin 6 of U2340 goes HI and signals from both vertical compartments are blocked. The auxiliary Y-axis Amplifier is also disabled by the X/Y Inhibit signal.

AUXILIARY Y-AXIS INPUT AMPLIFIER

The Auxiliary Y-Axis Input Amplifier accepts an input from horizontal plug-in units having compatible features. For example, a trace separation voltage to offset a delayed display. The single-ended signal connected to the input of this stage is converted to a push-pull signal at the collectors of Q2365 A and B. Q2390 permits the X/Y Inhibit to turn off this amplifier.

DELAY-LINE BUFFER

The output of the Vertical Channel Switch stage, along with any signal from the Auxiliary Y-Axis Input Amplifier, is connected to the bases of Q2386 and Q2396. These transistors are connected in a common emitter shunt feedback configuration to provide a low impedance summing point, and voltage gain. L2386-L2396 and C2387-R2387, C2397-R2397, and C2398-R2398-R2388 improve both the high-frequency response and the reverse impedance termination for the Delay Line.

DELAY LINE

Delay Line DL2400 provides approximately 150 nanoseconds delay for the vertical signal, to allow the horizontal circuits time to initiate a sweep before the vertical signal reaches the vertical deflection plates of the crt. This allows the instrument to display the leading edge of the signal originating the trigger pulse when using internal triggering. The delay line used in this instrument has a characteristic impedance of about 50 ohms per side, and 100 ohms differentially.

VERTICAL AMPLIFIER 4

The Vertical Amplifier circuit provides final amplification for the vertical signal before it is applied to the vertical deflection plates of the crt. This circuit includes an input from the BEAMFINDER switch to compress an overscanned display within the viewing area of the crt. Figure 3-18 shows a detailed block diagram of the Vertical Amplifier circuit. A schematic of this circuit is shown on diagram 4 in the diagrams section.

CENTERING AND READOUT AMPLIFIER

Q2530-Q2430 compose a paraphase amplifier to provide balance or centering control for the Vertical Amplifier by changing the ratio of the current that is summed at the emitters of Q2441-Q2541. In addition, this stage provides the input for the vertical readout signal through J2534 and the base of Q2530.

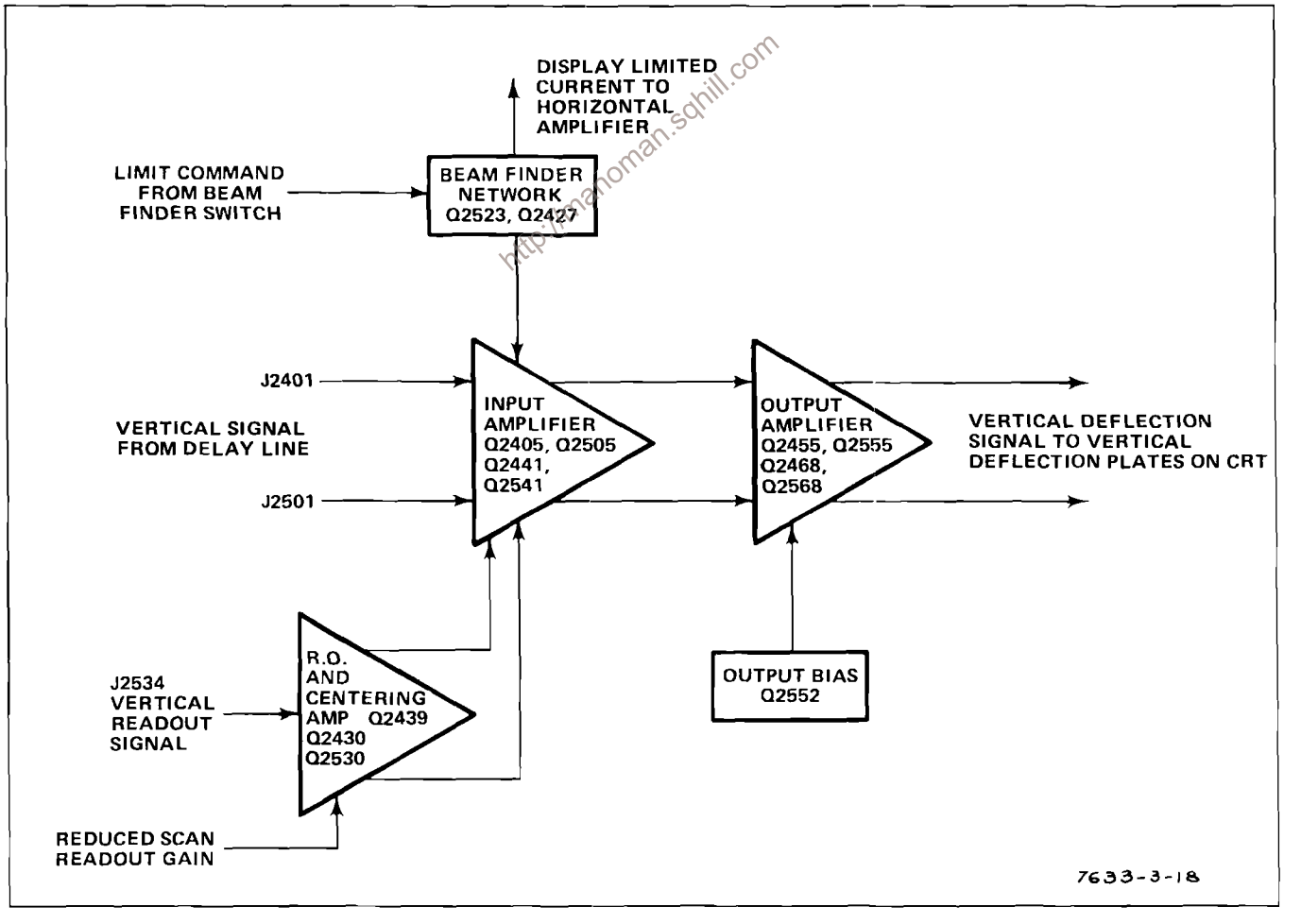

Figure 3-18. Vertical Amplifier detailed block diagram.

Q2439 acts as a switch to add R2538-R2438 to the emitter circuit of Q2530-Q2430. This effectively increases the gain of the readout amplifier in the Reduced Scan mode, so that the readout is positioned outside the Reduced Scan graticule area.

INPUT AMPLIFIER

Forward termination of the delay line is accomplished by R2402-R2502, in conjunction with the input impedance of Q2405-Q2505. R2402-R2502 also act as load resistors for the Delay-Line Buffer stage. Q2405-Q2441-Q2505-Q2541 are connected in a cascade configuration. The RC networks in the emitters of Q2405-Q2505 compensate for the losses in the delay line and provide some temperature compensation for the Vertical Amplifier.

The emitter current of Q2405-Q2505 is returned through the Beam Finder switch Q2423. When the Beam Finder is activated, Q2423 is turned off and the current path is through R2423, thus reducing the dynamic range of the input amplifier to limit the display vertically within the graticule area.

Thermal balancing of the vertical amplifier is accomplished by R2527, which adjusts the base voltage of Q2441-Q2541.

The signal from Q2441-Q2541 is connected to the output amplifier through the transmission line, which is terminated by L2448-L2548 and R2448-R2548. The vertical gain is adjusted by R2446, a shunt across the collectors of Q2441-Q2541.

http://manoman.sqrtll.com

BEAMFINDER NETWORK

The Beamfinder Network provides a means of locating a display that overscans the graticule area. Under normal operation, the Display Limit Command is at −15 volts, which holds Q2427 cut off and allows Display Limited Current for the Horizontal Amplifier to rise to about +8 volts. During this time, Q2423 is held on and emitter current from Q2405-Q2505 flows through Q2423 to ground. When the BEAMFINDER switch is pressed, the Display Limit Command rises positive, turning Q2427 on and Q2423 off. This pulls the Display Limit Current to −15 volts, and reduces the emitter current of Q2405-Q2505 to a level that limits the dynamic range of the input stage. R2523-R2524 serve to maintain the proper common mode voltage at the outpu of the amplifier when the BEAMFINDER is used.

OUTPUT AMPLIFIER

The output cascade amplifier is driven through "T coils" to increase high frequency gain. High-frequency compensation is provided by C2456 and the varactor network in the emitters of Q2455-Q2555.

Output common base stage Q2468-Q2568 is driven through the RC matching networks between the collectors of Q2455-Q2555 and emitters of Q2468-Q2568. The output signal at the collectors of Q2468-Q2568 provides the vertical deflection signal for the crt.

HORIZONTAL AMPLIFIER 5

The Horizontal Amplifier circuit amplifies the push-pull horizontal deflection signals from the plug-in unit in the horizontal compartment and connects it to the horizontal deflection plates of the crt. Figure 3-19 shows a detailed block diagram of the Horizontal Amplifier circuit. A schematic diagram of this circuit is shown in the diagrams section at the rear of this manual.

HORIZONTAL CHANNEL SWITCH

Signals from the plug-in unit in the horizontal compartment are connected to pins 2 and 15 of integrated circuit U510. The Readout signal is connected to pin 7 of U510. U510 determines which input signal will be applied to the Horizontal Amplifier circuit. This is controlled by the X/Y Shutdown signal from the Readout system. When the X/Y Shutdown signal is LO, the signal from the horizontal compartment is passed to the output of U510. When the X/Y Shutdown is HI, the Readout signal is passed to the output of U510. Resistors R514, R515, R521, and R522 establish the operating levels for this circuit. The range of Gain Adjustment R512 is established by R511 and R513. The output is a differential signal

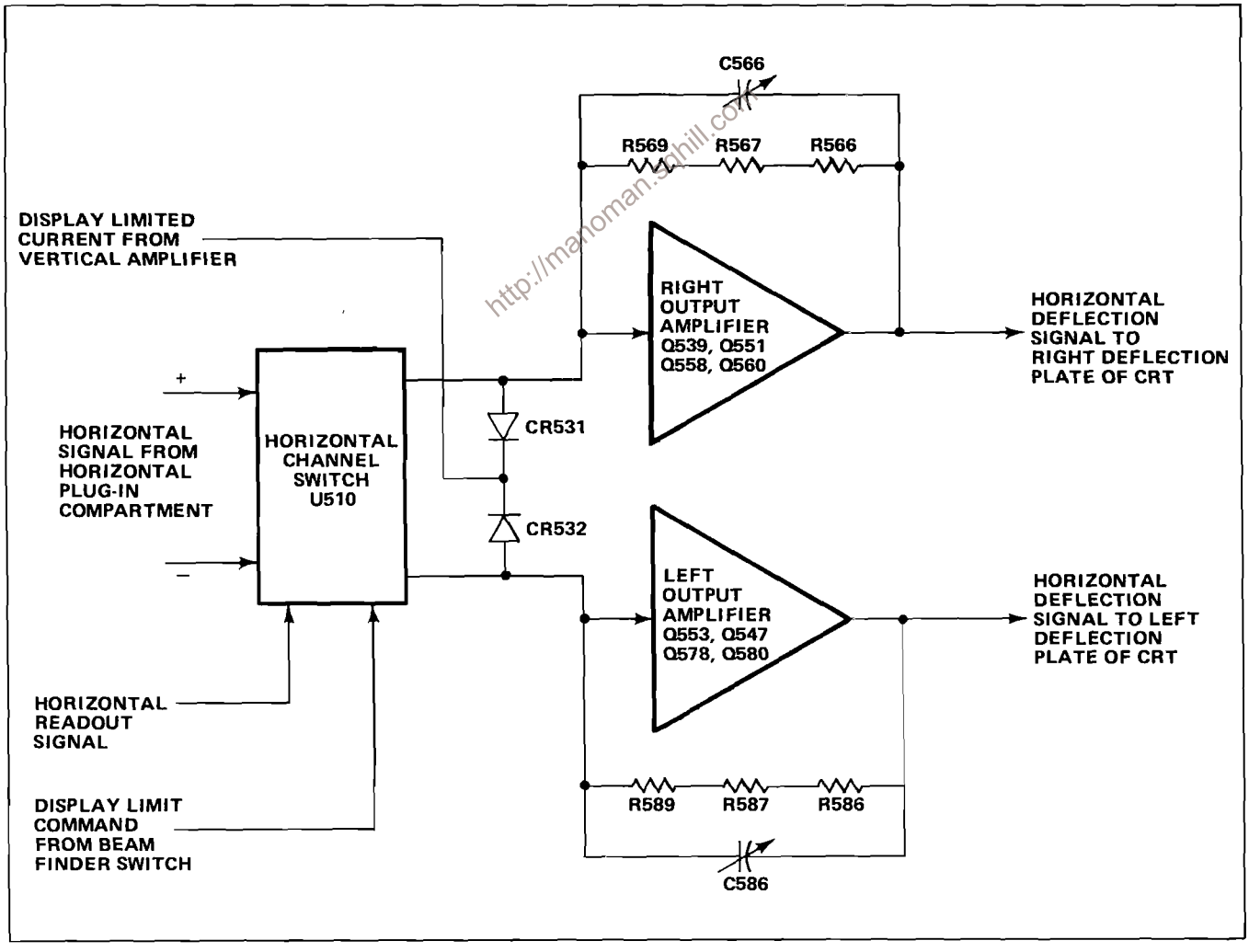

Figure 3-19. Horizontal Amplifier detailed block diagram.

connected to the Horizontal Amplifier circuit. For a more detailed explanation of the channel switch operation see Trigger Channel Switch under Trigger Select Operation.

For normal operation, the Display Limit Command is connected to the −15 supply through the BEAMFINDER switch. When the BEAMFINDER switch is actuated, the −15 volt is interrupted to limit the current to U510. At the same time, current is added through CR531 and CR532 from the Display Limited Current line. This maintains the same DC currents to the output amplifier in both positions of the BEAMFINDER switch. The signal at the output is connected to the left and right amplifiers. R525 adjusts the amplifier for center screen deflection with no signal.

RIGHT OUTPUT AMPLIFIER

Transistors Q539, Q551, Q558, and Q560 are connected as a current-driven feedback amplifier. The input current is converted to a voltage output signal to drive the right horizonal deflection plate of the crt. The signal at the collector of Q539 is connected to the emitters of output transistors Q558-Q560 through emitter follower Q551 and parallel paths C555-R555 and R563. The signal is connected to the emitter of Q560 through R563. The output transistors Q558 and Q560 are connected in the complementary configuration to provide less resistive loading at the output. The output signal at the collectors of Q558-Q560 is connected to the right deflection plate of the crt through R565.

http://manomeo.sobill.com

The crt deflection plates present a capacitive load to the amplifier, which requires additional current during a fast sweep. Extra current for positive excursions is provided by Q551 via R555, C555, and Q558 and for negative excursions, via R563 and Q560.

Resistor R556 reduces the power dissipation in Q558 and resistor R560 reduces dissipation in Q560. Resistors R566, R567, and R569 provide dc feedback and establish low frequency gain. Capacitors C566 and C588 are adjusted for correct gain at fastest sweep rates. C584-R584 provide thermal compensation.

LEFT OUTPUT AMPLIFIER

Basic operation of the Left Output Amplifier stage is the same as just described for the Right Output Amplifier. C586 provides linearity adjustment for the Left Output Amplifier at fast sweep rates. The output signal at the collectors of Q578-Q580 is connected to the left deflection plate of the crt through R585.

The series circuit CR549 and R549 stablize the output amplifier during fast retrace intervals. R535 is adjusted to balance the negative excursions of the Right and Left Output Amplifier when the time base plug-in is used in X10 Magnified mode.

SIGNAL OUT BOARD 6

The Signal Out circuit outputs to connectors mounted on the rear panel of the 7633. A schematic of this circuit appears in the diagrams section of this manual.

VERT SIG OUT

The vertical signal is selected by the TRIG SOURCE switch. The vertical signal selected is applied to the bases of a differential amplifier Q606 and Q618. A single-ended signal is taken off the collector of Q618 and connected to an output buffer Q620. CR621 and CR622 provide protection against a high voltage inadvertently applied to the output connector.

+ GATE OUT

The gate signal is connected to a comparator circuit Q662 and Q666 through resistor R660. From the comparator the gate signal is connected to the emitter of an output buffer Q672. Gate Selector switch connects one of the gate signals to R660, the input of the Gate Amplifier. Possible gate signals are MAIN gate and, with a dual-sweep time-base unit, a DELAY or an AUXILIARY gate signal can be selected. CR674 and CR676 provide protection against a high voltage inadvertently applied to the output connector.

http://manuman.sqhill.com

+ SAWTOOTH OUT

The sawtooth signal is connected to the Sawtooth Amplifier through R36. Q631, Q634, and Q640 comprise a negative feedback amplifier with a gain of two, determined by the ratio of feedback resistor R645 to the combined input resistance of R630 and R63. CR635 and CR676 provide protection against a high voltage inadvertently applied to the output connector.

CRT CIRCUIT 7

The CRT Circuit produces the high-voltage potentials and provides the control circuits necessary for operation of the cathode ray tube (crt). This circuit also includes the Z-Axis and Auto Focus amplifier stages. Figure 3-20 is a detailed block diagram of the CRT Circuit. A schematic diagram of the circuit is shown on diagram 7 in the diagrams section.

T1199 and Q1195 form a tuned-tank, sine-wave oscillator. Transformer T1199 has four secondary windings; the high-voltage winding, a 600 volt supply winding, a filament winding, and an oscillator feedback winding.

HIGH VOLTAGE REGULATION

The high-voltage tap on the secondary of T1199 is the source of current for the cathode of the crt. The ac is rectified through CR1213 and filtered by C1213, R1214, and C1214 to provide approximately

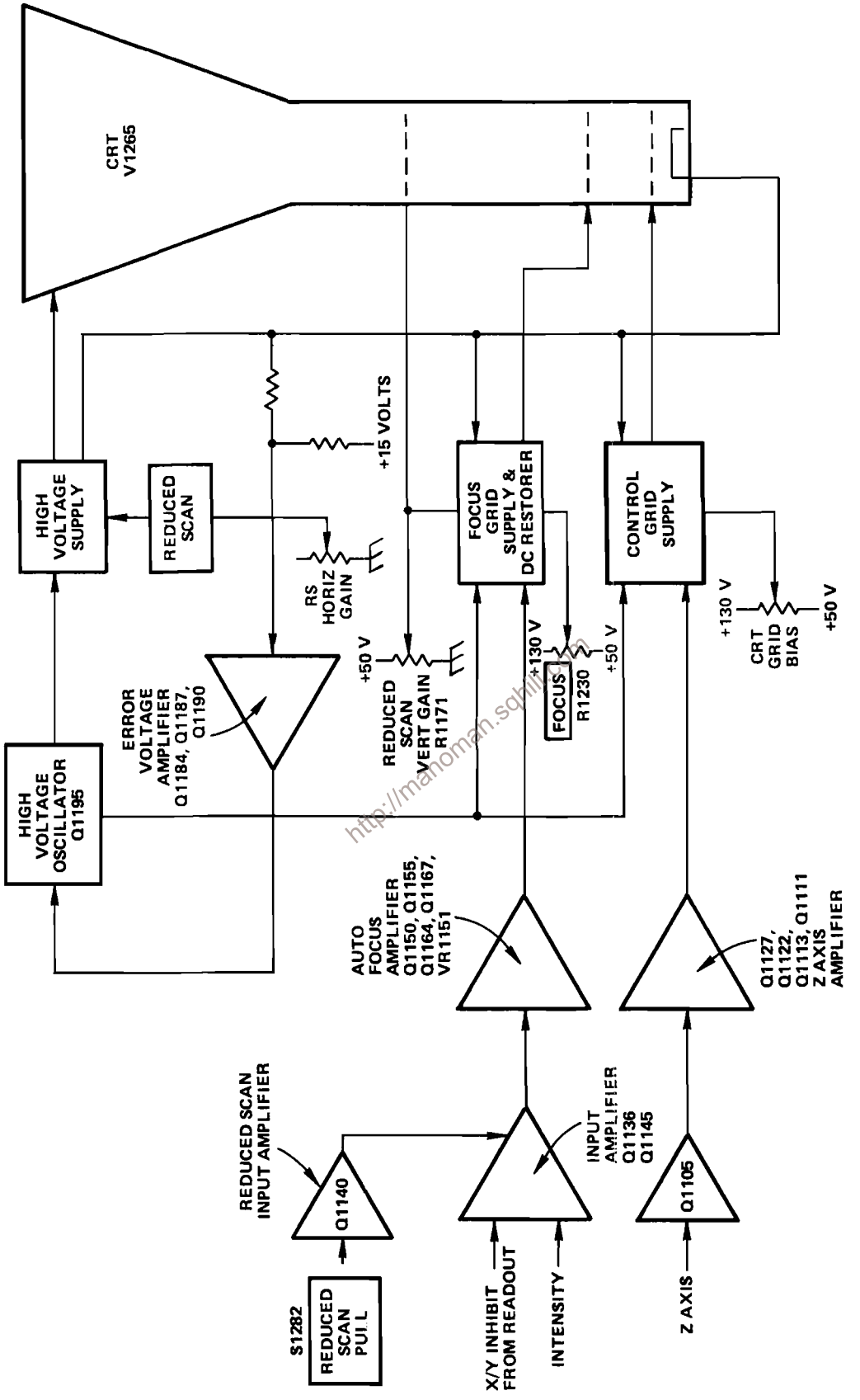

Figure 3-20. CRT circuit detailed block diagram.

−1500 volts to the cathode. In order to maintain a constant voltage on the cathode, this same tap serves to reference the feedback path to the oscillator. R1226A and R1226B (part of the same substrate for good stability) form a divider network. The signal at the junction of these two resistors is applied to the base of Q1184. This signal is an error voltage determined by comparing the cathode voltage against a positive voltage of approximately 15.6 volts appearing at the anode of CR1223.

The difference signal is amplified through Q1184 and Q1187 and applied to the base of emitter follower Q1190. The output of Q1190 is fed to the base of oscillator transistor Q1195 through the primary winding of T1199. The base winding ac return is provided by C1193. Resistor R1192 provides a fixed value current for the oscillator. This stabilizes the network by preventing the oscillator from stopping during the times the feedback network is shut off.

The top of the high-voltage winding supplies the positive accelerating potential for the crt anode. The anode supply is a voltage doubler consisting of C1201, CR1202, CR1203, C1202, R1204, R1205, R1206, and C1206. R1207 and R1208 provide electrical damping of mechanical resonance in the crt meshes.

The bottom of the high-voltage winding secondary connects to the crt tetrode. This tap is referenced to +50 volts through CR1216.

The crt filament voltage is supplied directly by the heater winding of the transformer secondary. The cathode and heater are connected through R1263 to prevent cathode-to-heater breakdown due to the large difference in potential between these two crt elements.

http://manomarsqhill.com

When S1282 is closed (REDUCED SCAN mode), K1177 is activated to introduce CR1210 into the circuit. This completes a voltage doubler circuit that provides approximately −3000 volts to the cathode and approximately −1500 volts to the tetrode.

AUTO FOCUS DC RESTORER

The Focus electrode is supplied by a voltage from the wiper arm of the Focus Preset control, R1242 through R1240 and R1239. R1243 adjusts the prefocus for Reduced Scan operation. The focus of the display is determined by the FOCUS control, R1230. This control and the Auto Focus amplifier maintain a well defined display under varying intensity conditions. The network consisting of CR1234, CR1238, CR1239, CR1233, VR1233, C1237, and C1238 provide a varying negative voltage translated to the proper dc level, for the focus grid of the crt. An ac voltage from the 600-volt winding of the transformer secondary is connected to the focus grid supply through C1235, R1235, and R1236. The positive clipping level at the junction of CR1233 and CR1234 is determined by the FOCUS control setting. The negative clipping level at the cathode of CR1234 is determined by the output level of the Auto Focus Amplifier.

A change in the intensity level, as changes in the peak-to-peak values of the ac voltage, is coupled to the focus grid from the Auto Focus amplifier through C1236 and C1238. This ac signal is introduced through CR1238 and CR1239 to vary the dc signal across R1239. Focus is adjusted by the front panel FOCUS control R1230.

AUTO FOCUS

The X/Y Inhibit signal from the Readout System determines the switching between Q1135 and Q1145, readout intensity or display inensity respectively. The conduction of either of these transistors, through R1147 sets the level at the base of Q1150. Q1150, Q1155, Q1164, and Q1165 comprise an analog feedback amplifier. The conduction of Q1150 controls the signal at the collector of Q1167. This signal is fed back to the base of Q1155 through a divider network. Q1155 and Q1150 form a differential amplifier which compares the focus signal with that of the intensity input at the base of Q1150.

In the REDUCED SCAN mode, Q1140 conducts and, through REDUCED SCAN Focus adjustments R1141 and R1142, sets the Auto Focus range for REDUCED SCAN operation.

CONTROL-GRID DC RESTORER

The Control-Grid DC Restorer couples dc and low frequency components of the Z-Axis Amplifier signal to the crt control grid. This allows the Z-Axis Amplifier to control the CRT beam current (intensity). The potential difference between the Z-Axis Amplifier output and the control grid (about 3000 volts) prohibits direct coupling.

The dc restorer is actually a cathode-referenced bias supply for the crt control grid. Quiescently, its output voltage is more negative than the cathode by an amount set by crt grid bias adjustment R1248.

http://mesoman.shim.com

The network consisting of diodes CR1251, CR1255, CR1257, and CR1258, provides the negative voltage for the control grid of the crt. Output level of this supply is set by crt Grid Bias adjustment R1248. Approximately 600 volts peak-to-peak from the secondary of T1199 is connected to the control grid supply through C1253, R1253, and R1254. CR1255 and CR1251 clip this signal to determine the operating level at the control grid. CR1255 limits the negative excursion of the signal. Quiescently, when the crt is blanked, the anode of CR1255 is set at about +15 volts by the Z-Axis Amplifier stage. The positive clipping level at the cathode of CR1251 is set by crt Grid Bias adjustment R1248. R1248 is adjusted to bias the control grid of the crt just enough negative so the trace is blanked between sweeps.

The negative level at the crt cathode held constant by the High-Voltage Regulator is connected through R1259 to the cathode of CR1258. The clipped voltage developed by CR1251 and CR1255 is peak-to-peak rectified by CR1257 and CR1258 and super-imposed on this negative level. This results in a grid level, which is more negative than the crt cathode level. C1255 acts as a filter to provide a constant voltage output level. The unblanking gate level developed by the Z-Axis Amplifier stage is applied to the anode of CR1255 through R1118. Fast rising and falling portions of this signal are coupled directly to the crt grid through C1255.

Z-AXIS AMPLIFIER

The Z-Axis signal from the Logic circuit and the Z-Axis signal from the Readout system are connected to the emitter of Q1105. Transistor Q1105 is a common-base amplifier to establish a low input

impedance for the input signals. Transistors Q1127, Q1122, Q1113, and Q1111 form a current driven operational amplifier. The input and output transistors are complementary to provide a fast rise-time and a fast fall-time response with minimal standing current. Resistor R1123 establishes a low current in the series connected output transistors. Transistor Q1127 supplies additional current through C1124 for the positive transients, and transistor Q1111 supplies additional current for negative transients. Capacitor C1115 is adjusted for optimum square-wave output, resistors R1115 and R1116 along with capacitor C1115 form the feedback network. Zener diode VR1109 provides the necessary change of voltage from the collector of Q1105 to the base of Q1111.

CRT CONTROL CIRCUITS

Astigmatism adjustment R1274 and R1276, which are used in conjunction with the FOCUS control to obtain a well-defined display, varies the positive level on the astigmatism grid. Geometry adjustment R1292 varies the positive level on the horizontal deflection-plate shield to control the overall geometry of the display.

Two adjustments control the trace alignment by varying the magnetic field induced by coils around the crt. Y-Axis Alignment R1284 controls the current through L1284, which affects the crt beam after vertical deflection, but before horizontal deflection. Therefore, it affects only the vertical (Y) components of the display. Beam Rotation adjustment R1286 controls the current through L1295 and affects both the vertical and horizontal rotation of the display.

http://manoman.sqhill.com

LOW-VOLTAGE POWER SUPPLY 8

The Low-Voltage Power Supply circuit provides the operating power for this instrument from six regulated supplies. Electronic regulation is used to provide stable, low-ripple output voltages. Each supply contains a short-protection circuit to prevent instrument damage if a supply is inadvertently over-loaded or shorted to ground. Figure 3-21 shows a detailed block diagram of the Low-Voltage Power Supply circuit. A schematic of this circuit is shown on diagram 8 at the rear of this manual.

POWER INPUT

Power is applied to the primary of transformer T801 through line fuse F1000, thermal cutout S1000, and POWER switch S1001. The Voltage-Selector Jumper, P1001, connects the two halves of the primary of T801 in parallel for 110-volt (nominal) operation. Voltage-Selector Jumper P1002 connects the two halves of the primary in series for 220-volt (nominal) operation. The line fuse, F1C00, must be changed to provide the correct protection for 220-volt nominal operation.

Each half of the primary of T801 has taps above and below the 110-volt (220-volt) nominal point. When the Voltage Selector Jumper is moved from LOW to MED to HI, more turns are effectively added to the primary winding and the turns ratio is decreased to compensate for the increased primary voltage. This configuration extends the regulating range of the 7633.

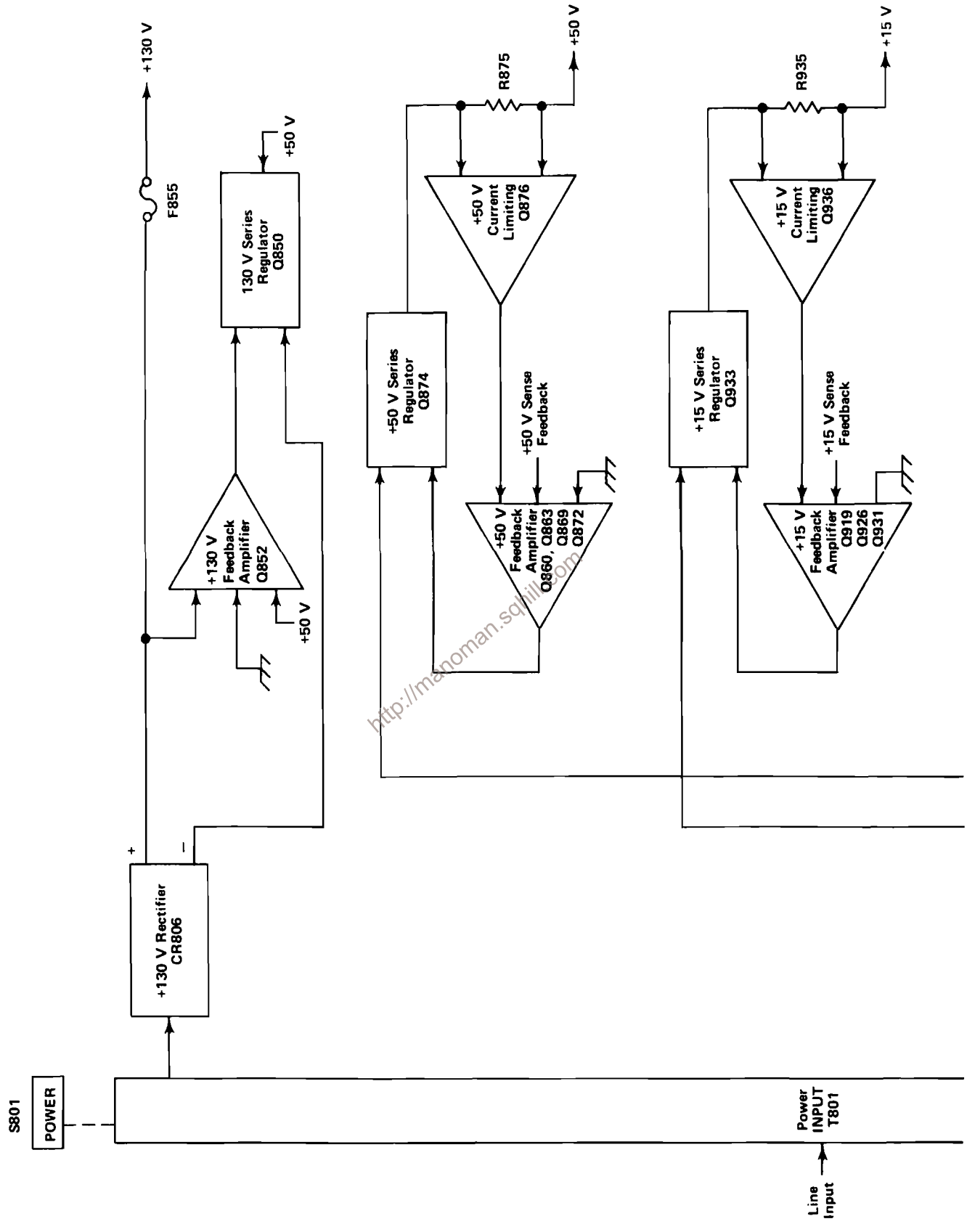

http://manoman.sqhill.com

Figure 3-21. Low-Voltage Power Supply detailed block diagram.

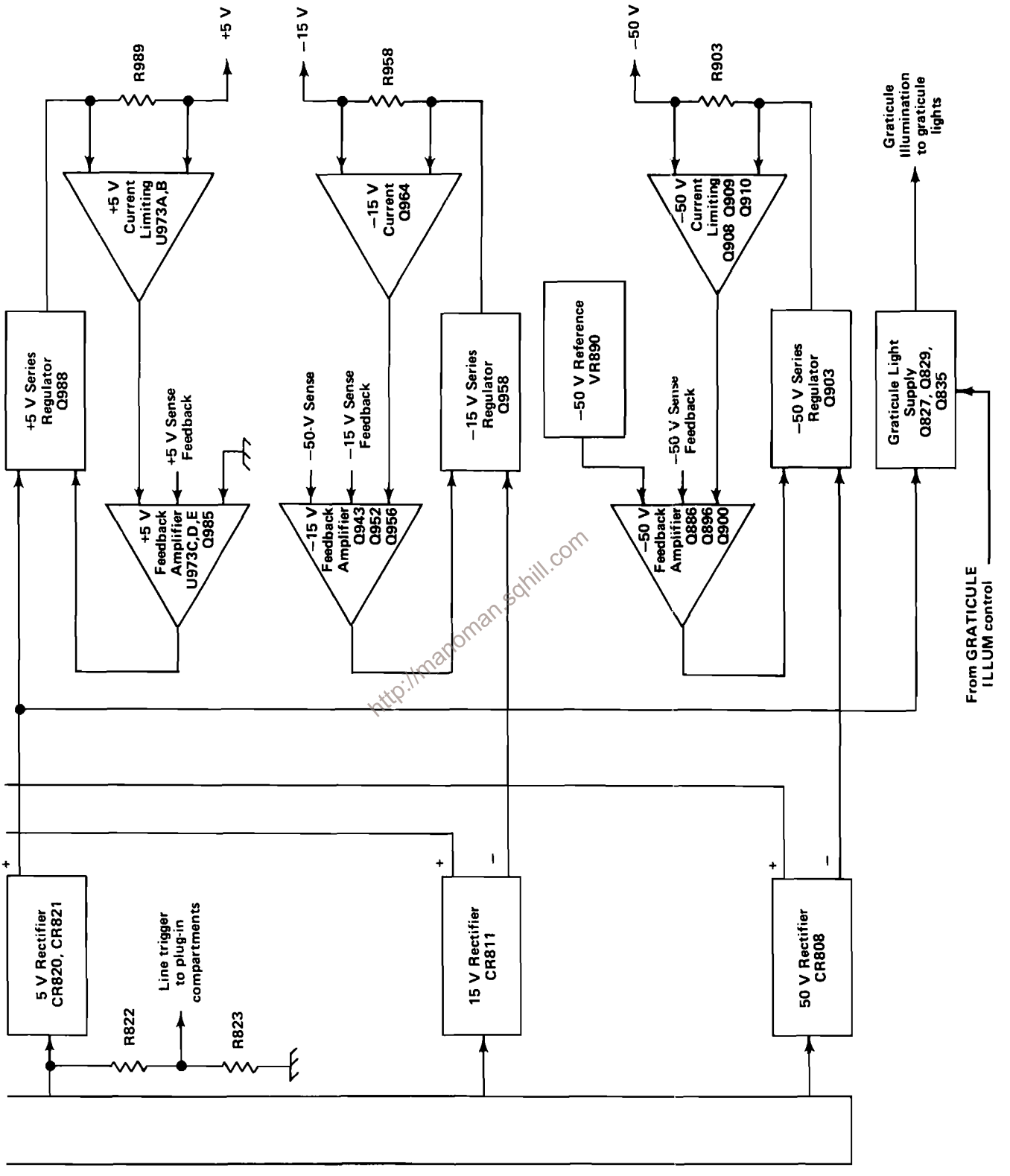

http://manoman.sqhill.com

Figure 3-21. Low-Voltage Power Supply detailed block diagram.

A fan provides forced-air cooling for the 7633. The fan is connected in parallel with one half of the primary winding of T801. Therefore, it always has the same voltage applied regardless of the position of the Voltage-Selector Jumper.

Thermal cutout S1000 provides thermal protection for this instrument. If the internal temperature of the instrument exceeds a safe operating level, S1000 opens to interrupt the applied power. When the temperature returns to a safe level, S1000 automatically closes to re-apply the power.

−50-VOLT SUPPLY

The following discussion includes the description of the 50 V Rectifier, −50 V Series Regulator, −50 V Feedback Amplifier, −50 V Reference, and −50 V Current Limiting stages. Since these stages are closely related in the operation of the −50-volt regulated output, their operation is most easily understood when discussed as a unit.

The 50 V Rectifier assembly CR808 rectifies the output at the secondary of T801 to provide the unregulated voltage source for both the −50- and +50-volt supplies. CR808 is connected as a bridge rectifier and its output is filtered by C808-C809. Transistors Q886, Q896, Q900 and Q903 operate as a feedback-stabilized regulator circuit to maintain a constant −50-volt output level. Q886 is connected as a differential amplifier to compare the feedback voltage at the base of Q886B against the reference voltage at the base of Q886A. The error output at the collector of Q886B reflects the difference, if any, between these two inputs. The change in error-output level at the collector of Q886B is always opposite in direction to the change in the feedback input at the base of Q886B (out of phase).

http://manoman.sohil.com

Zener diode VR890 sets a reference level of about −9 volts at the base of Q886A. A feedback sample of the output voltage from this supply is connected to the base of Q886B through divider R880-R881-R882. R881 in this divider is adjustable to set the output level of this supply. Notice that the feedback voltage to this divider is obtained from a line labeled −50 V Sense. Figure 3-22 illustrates the reason for this configuration. The inherent resistance of the interconnecting wire between the output of the −50-Volt Supply and the load produces a voltage drop which is equal to the output current multiplied by the resistance of the interconnecting wire. Even though the resistance of the wire is small, it results in a substantial voltage drop due to the high output current of this supply. Therefore, if the feedback voltage were obtained ahead of this drop, the voltage at the load might not maintain close regulation. However, the −50 V Sense feedback configuration overcomes this problem since it obtains the feedback voltage from a point as close as practical to the load. Since the current in the −50 V Sense line is small and constant, the feedback voltage is an accurate sample of the voltage applied to the load.

Regulation occurs as follows: If the output level of this supply decreases (less negative) due to an increase in load, or a decrease in input voltage (as a result of line voltage changes or ripple), the voltage across divider R880-R881-R882 decreases also. This results in a more positive feedback level at the base of Q886B than that established by the −50 V Reference stage at the base of Q886A. Therefore, the output current at the collector of Q886B increases. This increase in output from Q886B allows more current to flow through Q896 and Q900 to result in increased conduction of −50 V Series Regulator

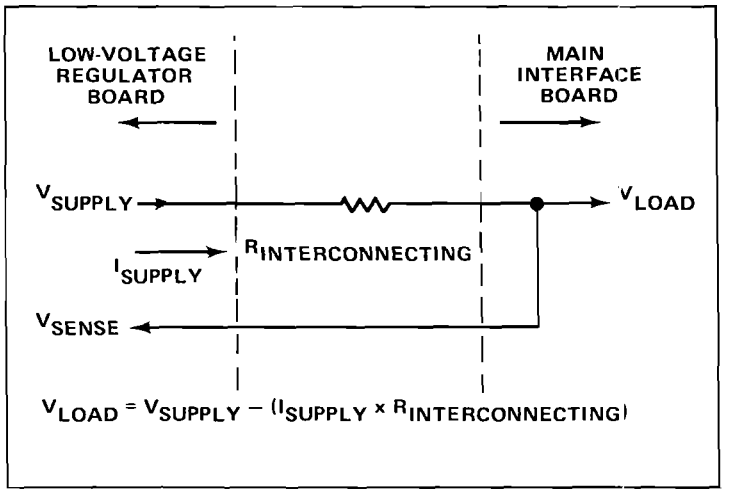

Figure 3-22. Schematic illustrating voltage drop between power supply output and load due to resistance of interconnecting wire.

Q903. The load current increases and the output voltage of this supply also increases (more negative). As a result, the feedback voltage from the −50 Sense line increases and the base of Q886B returns to the same level as the base of Q886A. Similarly, if the output level of this supply increases (more negative), the output current of Q886B decreases. The feedback through Q896 and Q900 reduces the conduction of the −50 V Series Regulator to decrease the output voltage of this supply.

−50 Volts adjustment R881 determines the divider ratio to the base of Q886B and thereby determines the feedback voltage. This adjustment sets the output level of the supply in the following manner: If R881 is adjusted so the voltage at its variable arm goes less negative (closer to ground), this appears as an error signal at the base of Q886B. In the same manner as described previously, this positive-going change at the feedback input of the differential amplifier increases the conduction of the −50 V Series Regulator to produce more current to the load, and thereby increase the output voltage of this supply. This places more voltage across divider R880-R881-R882 and the divider action returns the base of Q886B to about −9 volts. Notice that the feedback action of this supply forces a change in the output level which always returns the base of Q886B to the same level as the base of Q886A. In this manner, the output level of the −50-Volt Supply can be set to exactly − 50 volts by correct adjustment of R881.

http://manoman.sqhill.com

The −50 V Current Limiting stage Q908-Q909-Q910 protects the −50-Volt Supply if excess current is demanded from this supply. All of the output current from the −50-Volt Supply flows through R903. Transistor Q908 senses the voltage at the collector of the −50 V Series Regulator Q903 and compares it against the −50 V output level at the base of Q909 which is obtained from the other side of R903. Under normal operation, Q908 is held in conduction and Q909 is off. However, when excess current is demanded from the −50 V Series Regulator due to a short circuit or similar malfunction at the output of this supply, the voltage drop across R903 increases until the base of Q908 goes more negative than the level at the base of Q909. Then Q909 takes over conduction of the comparator. The collector current of Q909 increases the voltage drop across R896 to reduce the conduction of Q896 in the −50 V Feedback Amplifier and limit the conduction of Q903. Q910 is connected as a constant-current source for Q908-Q909.

−15-VOLT SUPPLY

Basic operation of all stages in the −15-Volt Supply is the same as for the −50-Volt Supply. Reference level for this supply is established by divider R945-R946 between ground and the −50 V Sense voltage. The divider ratio of R945-R946 sets a level of −15 volts at the base of Q943A. The level on the −50 V Sense line is held stable by the −50-Volt Supply as described previously. The −15 V Sense voltage is connected to the base of Q943B through R940. Any change at the output of the −15-Volt Supply appears at the base of Q943B as an error signal. The output voltage is regulated in the same manner as described for the −50-Volt Supply.

+5-VOLT SUPPLY

Basic operation of the +5-Volt Supply is the same as described for the previous supplies. The +5 V Current Limiting and +5 V Feedback Amplifier (except for Q985) is made up of a five-transistor array U973. Notice that both U973C and Q985 in the +5 V Feedback Amplifier are connected as emitter followers, since inversion is not necessary in the feedback path for positive output voltages. Reference is established at 0 volt level by R975. Divider R970-R971, connected to both the +5 volt sense feedback and −50 volt sense feedback, establishes an error voltage at the base of U973E.

+15-VOLT SUPPLY

The +15-Volt Supply operates in the same manner as described for the previous supplies. The unregulated +15-Volt Supply provides the source voltage for the High-Voltage Oscillator stage in the crt circuit through fuse F814 and P870.

http://manuals.mcghill.com

+50-VOLT SUPPLY

Operation of the +50-Volt Supply is the same as described for the previous supplies. The unregulated +50 volts, from 50 V Rectifier CR808, is used to provide a positivei starting voltage for the −50-Volt Supply.

+130-VOLT SUPPLY

The +130-V Rectifier CR806 provides the rectified voltage for the +130-Volt Supply. However, this secondary winding of T801 does not supply the full potential necessary to obtain the +130-volt output level. To provide the required output level, the +50-Volt Supply is connected in series with this supply through Q850. Basic regulation of the output voltage is provided by +130 V Feedback Amplifier Q852, and +130 V Series Regulator Q850.

The output voltage of this supply is connected across divider R855-R856. This divider provides a quiescent level of about +50 volts at the base of Q852. The reference level for this supply is provided by the +50-Volt Supply connected to the emitter of Q852. If the output of this supply changes, this change is sensed by Q852 and an amplified error signal is connected to the base of Q850. This error

signal changes the conduction of the +130 V Series Regulator Q850 to correct the output error. Fuse F855 protects this supply if the output is shorted. However, since the response time of F855 is slow to a shorted condition, VR851 provides additional current to the base of Q850 to protect Q852 from damage. Diode CR852 limits the reverse bias on Q852 to about 0.6 volt when F855 is blown.

GRATICULE LIGHT SUPPLY

Power for the graticule lights is supplied by the Graticule Light Supply. Rectified voltage for this supply is provided by 5 V Rectifier CR820-CR821. Q835 operates as a series regulator transistor. Emitter follower Q829 determines the conduction of this series regulator as controlled by front panel GRATICULE ILLUM Control R1095. Current-limiting to protect this supply is provided by Q827. Under normal operation, divider R830-R831-R833 sets the base of Q827 below its conduction level. However, if excess current is demanded from this supply, the voltage drop across R837-R838 increases until Q827 comes into conduction. The collector of Q827 then limits the conduction of this supply to limit its output current.

Divider R822-R823 provides a sample of the line voltage in the secondary of T801 to the plug-in unit. This provides a line-frequency reference to the plug-in units for internal triggering at line frequency or for other applications.

http://manuman.sqhill.com

CALIBRATOR AND FRONT PANEL SWITCHING

The Calibrator and Front Panel Switching circuit provides output voltage to the front-panel Calibrator pin-jacks and includes the front-panel switches and controls. Figure 3-23 shows a detailed block diagram of the Calibrator portion of this circuit. A schematic of this circuit is shown on diagram 10 at the rear of this manual.

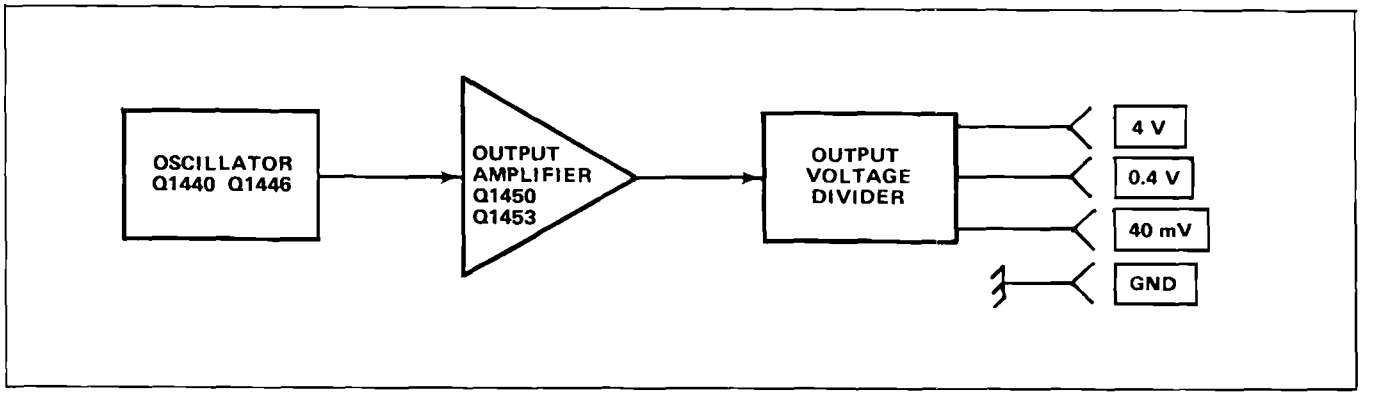

Figure 3-23. Calibrator detailed block diagram.

CALIBRATOR

GENERAL

The Calibrator circuit provides accurate voltage output at the front-panel Calibrator pin-jacks. Repetition rate of the output signal is about one kilohertz.

OSCILLATOR

Q1440 and Q1446 are connected as a square-wave oscillator to determine the repetition rate of the Calibrator circuit. Oscillation occurs as follows: Assume that Q1440 is conducting and Q1446 is off. The collector voltage of Q1440 (determined by the voltage divider formed by R1440 and R1441) drops to the saturation level of Q1440. With this low voltage on its base, Q1446 is turned off. Since Q1446 is not conducting, its collector goes positive, producing the positive portion of the square wave, and its emitter drops to a level of about 0.6 volt more negative than its base and stops. As a result, the current through R1445 and C1444 is no longer available to Q1440. This forward biases Q1446, due to an increased base voltage, causing its emitter to rapidly rise positive. Since C1444 cannot change its charge instantaneously, the sudden change in voltage at the emitter of Q1446 pulls the emitter of Q1440 positive also, to reverse bias it. The current through Q1446 produces a voltage drop at its collector to produce the negative portion of the square wave.

Now, conditions are reversed. Since Q1440 is reverse biased, there is no current through it. Therefore, C1444 can begin to discharge through R1443. The emitter level of Q1440 follows the discharge of C1444 until it reaches about −0.6 volt. Then, Q1440 is forward biased and its collector drops negative to reverse bias Q1446. This interrupts the current through Q1446, and its collector goes positive again to complete the square wave. Once again C1444 begins to charge through R1445 to start the second cycle. The signal produced at the collector of Q1446 has a repetition rate of about one kilohertz.

http://manuals.gdhk.com

The Oscillator stage can be changed by jumper P1445. When this jumper is installed in the DC position, the Oscillator is disabled and the collector of Q1446 rises positive. This produces a positive DC voltage output to the front-panel Calibrator pin-jacks.

OUTPUT AMPLIFIER

Transistors Q1450 and Q1453 are connected as a comparator with the reference level at the base of Q1453 determined by the network R1455-R1456-R1457-R1459. The 4 Volts adjustment R1459, is set to provide accurate output voltage at the 4 V Calibrator pin-jack.

The output of the Oscillator stage is connected to the base of Q1450. This signal controls the conduction of comparator Q1450-Q1453. When the base of Q1450 is high, it is off, and Q1453 is conducting. This produces a positive output voltage at the Calibrator pin-jacks. When the level at the base of Q1450 is switched low, Q1450 conducts and Q1453 is reverse biased. Now, the voltage level at the Calibrator pin-jacks drops to zero.

OUTPUT VOLTAGE DIVIDER

The collector current of Q1453 in the Output Amplifier stage is applied across the voltage divider made up of resistors R1461 through R1467. This divider is designed to provide a low output resistance in the 40 mV and 0.4 V position while providing accurate output voltages. The output resistance at the 4 V pin-jack is about 450 ohms and at the 0.4 V and 40 mV pin-jacks in about 50 ohms.

READOUT SYSTEM 9

(Option 1 Deletes the Readout System)

INTRODUCTION

The 7000-series Readout System provides alpha-numeric display of information encoded by the plug-in units. This display is presented on the crt and is written by the crt beam on a time-shared basis with the analog waveform display.

The definition of several terms follows:

Character—A character is a single number, letter, or symbol displayed on the crt, either alone or in combination with other characters.

Word—A word is made up of a related group of characters. In the 7633 Readout System, a word can consist of up to ten characters.

Frame—A frame is a display of all words for a given operating mode and plug-in combination. Up to eight words (six words in 3-compartment mainframes) can be displayed in one frame. Figure 3-24 shows the position of each word in a complete frame.

Column—One of the vertical lines in the Character Selection Matrix (see Figure 3-25). Columns R-10 (row 10) and R-14 (row 14) can be addressed in the 7633 system.

Time-Slot—A location in a pulse train. In the 7633 Readout System, the pulse train consists of 10 negative-going pulses. Each time-slot pulse is assigned a number between one and ten. For example, the first time-slot is TS-1.

Time-multiplexing—Transmission of data from two or more sources over a common path by using different time intervals for different signals.

http://manoman.schill.com

THREE-COMPARTMENT MAINFRAMES

The 7000-series Readout System is compatible with both three- and four-compartment mainframes. However, since three-compartment mainframes do not have a B horizontal plug-in compartment, the B horizontal channels are not used. In these instruments a "JUMP" Command is encoded for this compartment.

In three-compartment mainframes a "JUMP" Command is encoded in time-slot one on the Main Interface for both channels (one and two) of the B horizontal readout. (See Word Trigger for a discussion of the "JUMP" Command.) The "jump" command (row 13 current) is applied to pins 16 and 15 (B horizontal channels one and two respectively) of U2180. Column data current is not required for a "jump" command. This allows the Readout System to sense a "jump" during time-slot one at channel two, which causes it to "jump" the remaining nine time slots for that channel and go to channel one where it agains senses a "jump" command during time-slot one. This permits it to "jump" the remaining nine time slots in channel one. The readout system then begins a new frame.

DISPLAY FORMAT

Up to eight words (six words in three compartment mainframes) of readout information can be displayed on the crt. The position of each word is fixed and is directly related to the plug-in unit from which it originated. Figure 3-24 shows the area of the graticule where the readout from each plug-in unit is displayed. Notice that Channel 1 of each plug-in unit is displayed within the top division of the crt and Channel 2 is displayed directly below within the bottom division. Figure 3-26 shows a typical display where only Channel 2 of the Right Vertical and the Horizontal units is selected for display.

Each word in the readout display can contain up to 10 characters, although the typical display will contain between two and seven characters per word. The characters are selected from the Character Selection Matrix shown in Figure 3-25. In addition, 12 operational addresses are provided for special instructions to the Readout System. The unused locations in the Matrix (shaded area) are available for future expansion of the Readout system. The method of addressing the locations in the Character Selection Matrix is described in the following discussion.

DEVELOPING THE DISPLAY

The following basic description of the Readout System uses the block diagram shown in Figure 3-27. This description is intended to relate the basic function of each stage to the operation of the overall Readout System. Detailed information on circuit operation is given later.

http://manoman.sqhill.com

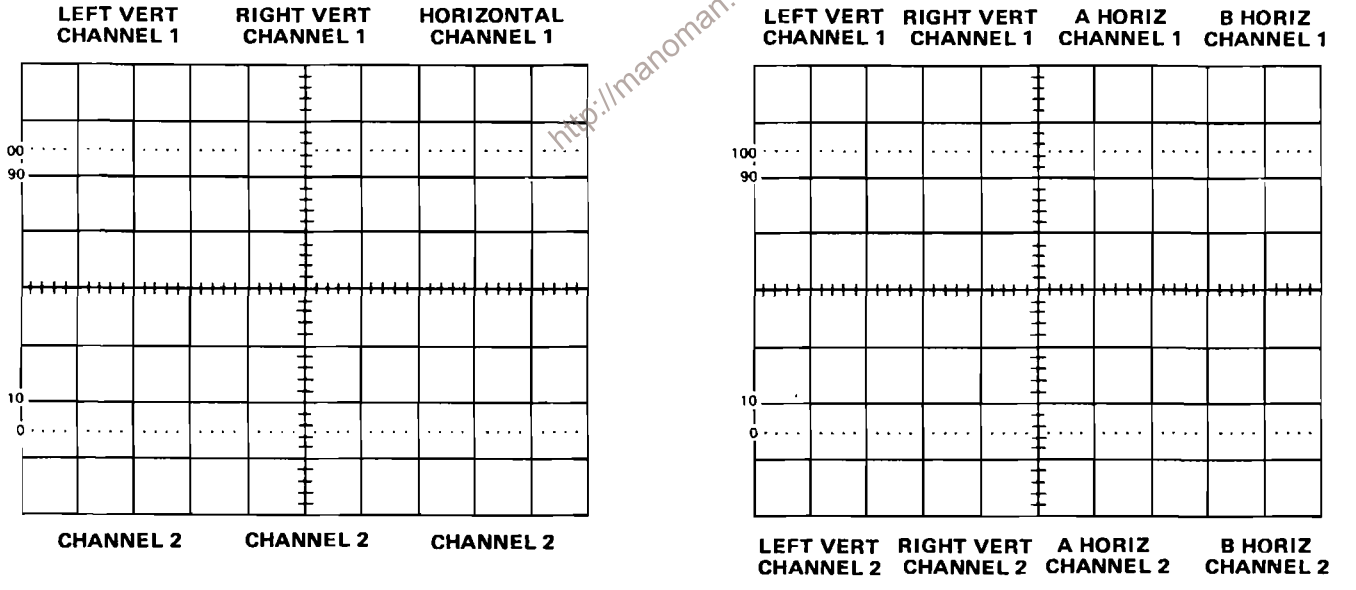

Figure 3-24. Location of readout words on the crt identifying the originating plug-in unit and channel (one complete frame shown).

The key block in the Readout System is the Timer stage. This stage produces the basic signals which establish the timing sequences within the Readout System. Period of the timing signal is about 250 microseconds (drops to about 210 microseconds when Display-Skip is received; see detailed description of Timing stage for further information). This stage also produces control signals for other stages within this circuit and interrupt signals to the Vertical Amplifier, Horizontal Amplifier, and Logic circuits, which allow a readout display to be presented. The Time-Slot Counter stage receives a trapezoidal voltage signal from the Timer stage and directs it to one of ten output lines. These output lines are labeled TS-1 through TS-10 (time-slots one through ten) and are connected to the vertical and horizontal plug-in compartments as well as to various stages within the Readout System. The output lines are energized sequentially, so there is a pulse on only one of the 10 lines during any 250-microsecond timing period. After the Time-Slot Counter stage has counted time-slot 10, it produces an End-of-Word pulse which advances the system to the next channel.

Two output lines, row and column, are connected from each channel of the plug-in unit back to the Readout System. Data is typically encoded on these output lines by connecting resistors between them and the time-slot input lines. The resultant output is a sequence of ten analog current levels which range from zero to one milliampere (100 microamperes/step) on the row and column output lines. This row and column correspond to the row and column of the Character Selection Matrix in Figure 3-25. The standard format for encoding information onto the output lines is given in Table 3-2. (Special-purpose plug-in units may have their own format for readout; these special formats will be defined in the manuals for these units.)

TABLE 3-2

Standard Readout Format

Time-Slot Number	Description
TS-1	Determines decimal magnitude (number of zeros displayed or prefix change information) or the IDENTIFY function (no display during this time-slot).
TS-2	Indicates normal or inverted input (no display for normal).
TS-3	Indicates calibrated or uncalibrated condition of plug-in variable control (no display for calibrated condition).
TS-4	Scaling.
TS-5 TS-6 TS-7	Not encoded by plug-in unit. Left blank to allow addition of zeros by Readout System.
TS-8	Defines the prefix which modifies the units of measurement.
TS-9 TS-10	Define the units of measurement of the plug-in unit. May be standard units of measurement (V, A, S, etc.) or special units selected from the Character Selection Matrix.

http://manoman.stbill.com

The encoded column and row data from the plug-in units is selected by the Column Data Switch and Row Data Switch stages respectively. These stages take the analog currents from the eight data lines (two channels from each of the four plug-in compartments) and produce a time-multiplexed analog voltage output containing all of the column or row information from the plug-ins. The Column Data Switch and Row Data Switch are sequenced by the binary Channel Address Code from the Channel Counter.

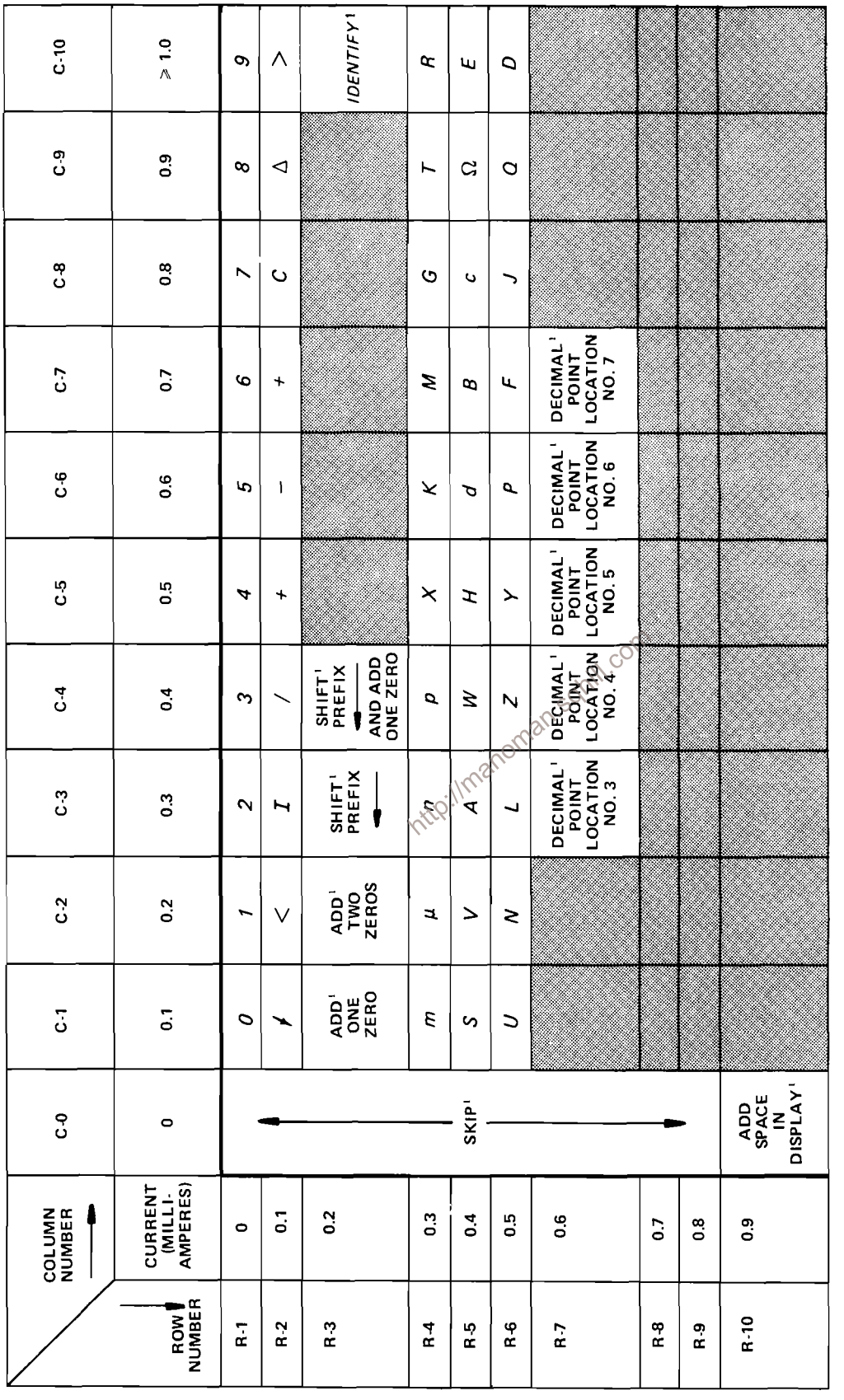

Figure 3-25. Character Selection Matrix for 7633 Readout System.

The time-multiplexed output of the Column Data Switch is monitored by the Display-Skip Generator to determine if it represents valid information that should be displayed. Whenever information is not encoded in a time-slot, the Display-Skip Generator produces an output level to prevent the Timer stage from producing the control signals that normally interrupt the crt display and present a character.

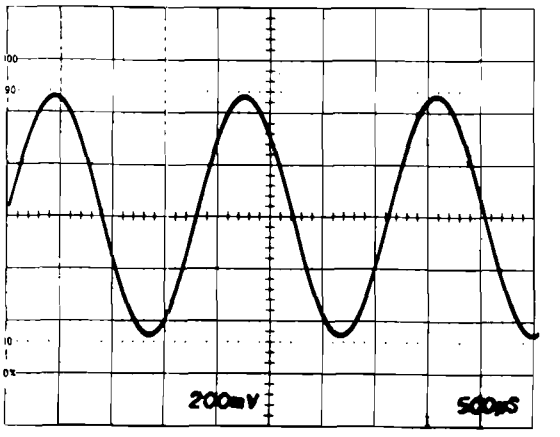

Figure 3-26. Typical readout display where only channel 2 of the Right Vertical and Horizontal units is displayed.

The analog outputs of the Column Data Switch and Row Data Switch are connected to the Column Decoder and Row Decoder stages respectively. These stages sense the magnitude of the analog voltage input and produce an output current on one of ten lines. The outputs of the Column Decoder stage are identified as C-1 through C-10 (column 1 through 10) corresponding to the encoded column information. Likewise, the outputs of the Row Decoder stage are identified as R-1 through R-10 (row 1 through 10) corresponding to the encoded row information. The primary function of the row and column outputs is to select a character from the Character Selection Matrix to be produced by the Character Generator stage. These outputs are also used at other points within the system to indicate when certain information has been encoded. One such stage is the Zeros Logic and Memory. During time-slot 1 (TS-1), this stage checks if zero-adding or prefix-shifting information has been encoded by the plug-in unit, and stores it in memory until time-slots 5, 6, or 8. After storing this information, it triggers the Display-Skip Generator stage so that there is no display during time-slot 1 (as defined by Standard Readout Format; see Table 3-2). When time-slots 5, 6, and 8 occur, the memory is addressed and any information stored there during time-slot 1 is transferred to the input of the Column Decoder stage to modify the analog data during the applicable time-slot.

http://manoman.sohil.com

Also, the Zeros Logic and Memory stage produces the IDENTIFY function. When time-slot 1 is encoded for IDENTIFY (column 10, row 3), this stage produces an output level, which connects the Column Data Switch and Row Data Switch to a coding network within the Readout System. Then, during time-slots 2 through 9, an analog current output is produced from the Column Data Switch and Row Data Switch which addresses the correct points in the Character Selection Matrix to display the word "IDENTIFY" on the crt. The Zeros Logic and Memory stage is reset after each word by the Word Trigger pulse.

The Character Generator stages produce the characters which are displayed on the crt. Any of the 50 characters shown on the Character Selection Matrix of Figure 3-25 can be addressed by proper selection of the column and row currents. Only one character is addressable in any one time-slot; a space can be added into the displayed word by the Decimal Point Logic and Character Position Counter stage when encoded by the plug-in. The latter stage counts the number of characters generated and produces an output current to step the display one character position to the right for each character. In addition, the character position is advanced once during each of time-slots 1, 2, and 3, whether a character is generated during these time-slots or not. This action fixes the starting point of the standard-format display such that the first digit of the scaling factor always starts at the same point within each

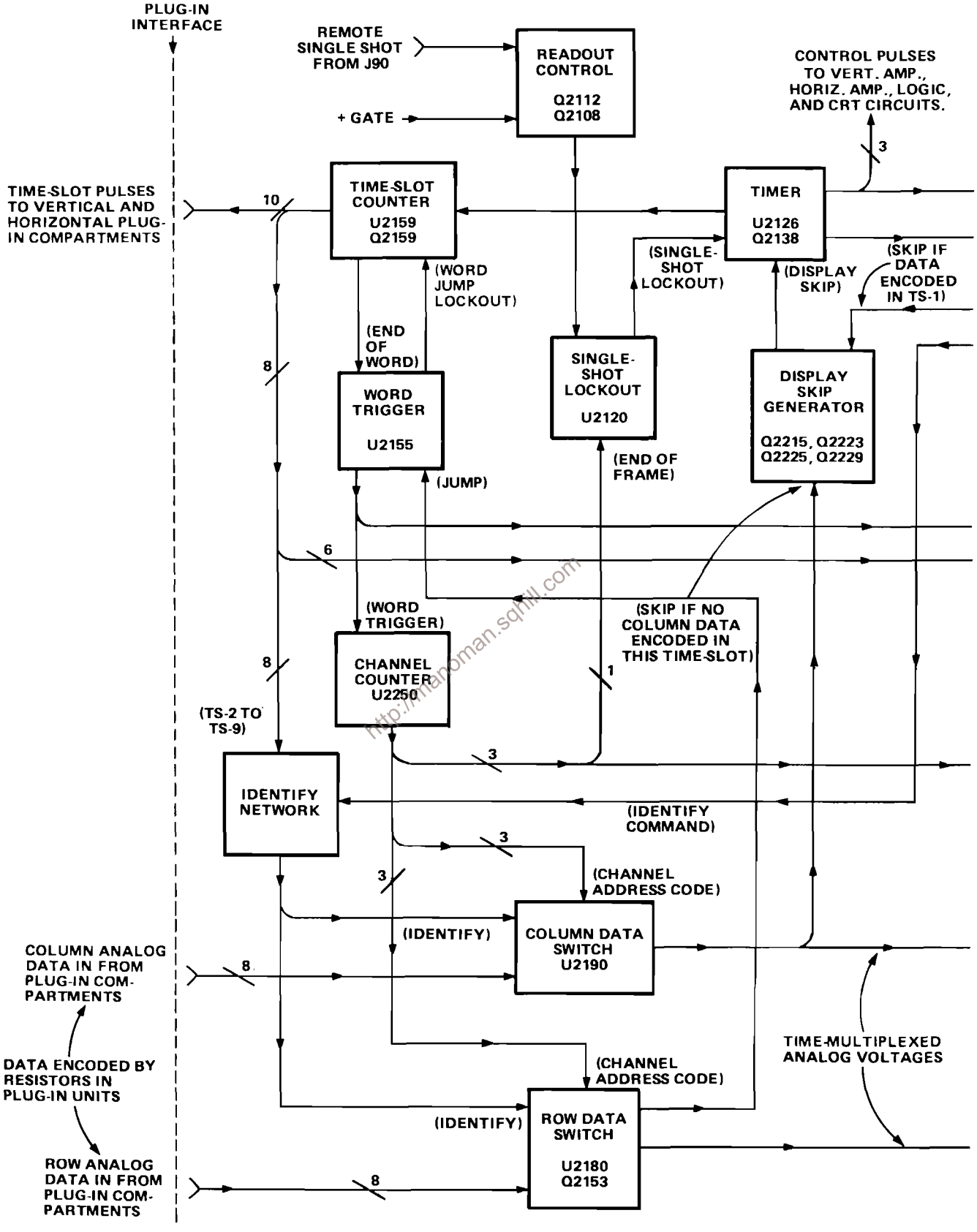

Figure 3-27. Detailed block diagram of the Readout System.

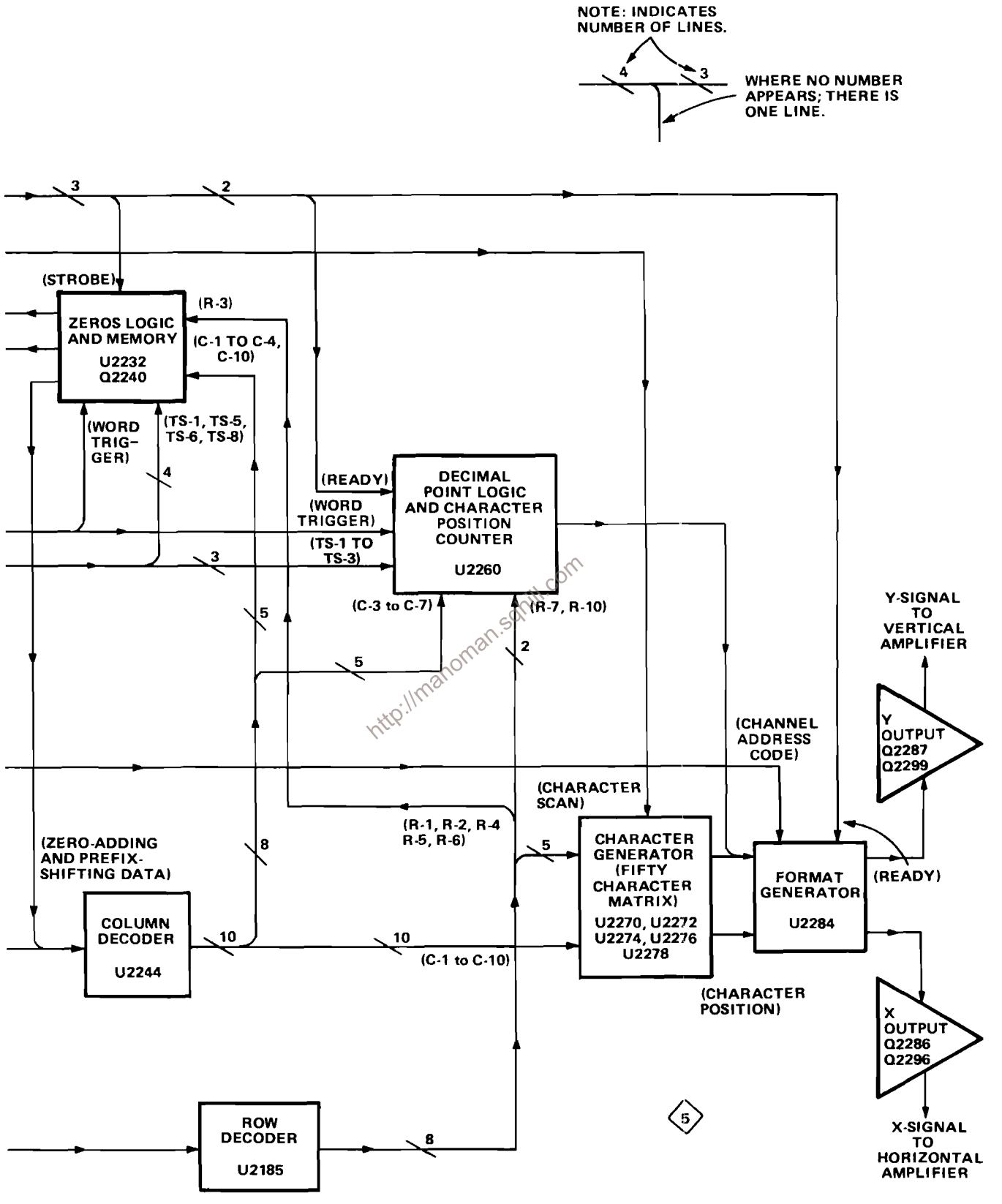

Figure 3-27. Detailed block diagram of the Readout System.

word regardless of the information encoded in time-slot 1, 2, or 3 preceding this digit. Also, by encoding row 10 and column 0 during any time-slot, a blank space can be added to the display. Decimal points can be added to the display at any time by addressing the appropriate row and column. (See Character Selection Matrix for location of decimal points.) The Decimal Point Logic and Character Position Counter stage is reset after each word by the Word Trigger pulse.

The Format Generator stage provides the output signals to the vertical and horizontal deflection systems of the instrument to produce the character display. The binary Channel Address Code from the Channel Counter stage is connected to this stage, so that the display from each channel is positioned to the area of the crt associated with the plug-in and channel originating the word (see Figure 3-24). The positioning current or decimal point location current generated by the Decimal Point Logic and Character Position Counter stage is added to the Horizontal (X) signal at the input to the Format Generator stage to provide horizontal positioning of the characters within each word. The X- and Y-Readout signals are connected to the Horizontal Amplifier and Vertical Amplifier through the X- and Y-Buffer stages.

The Word Trigger stage produces a trigger from the End-of-Word pulse generated by the Time-Slot Counter stage after the tenth time-slot. This Word Trigger pulse advances the Channel Counter to display the information from the next channel or plug-in. It also provides a reset pulse to the Zeros Logic and Memory stage and the Decimal Point Logic and Character Position Counter stage. The Word Trigger stage can also be advanced to jump a complete word or a portion of a word when a Jump command is received from the Row Data Switch stage.

The Single-Shot Lockout stage allows the display sequence of the Readout System to be changed. Normally, the Readout System operates in a free-

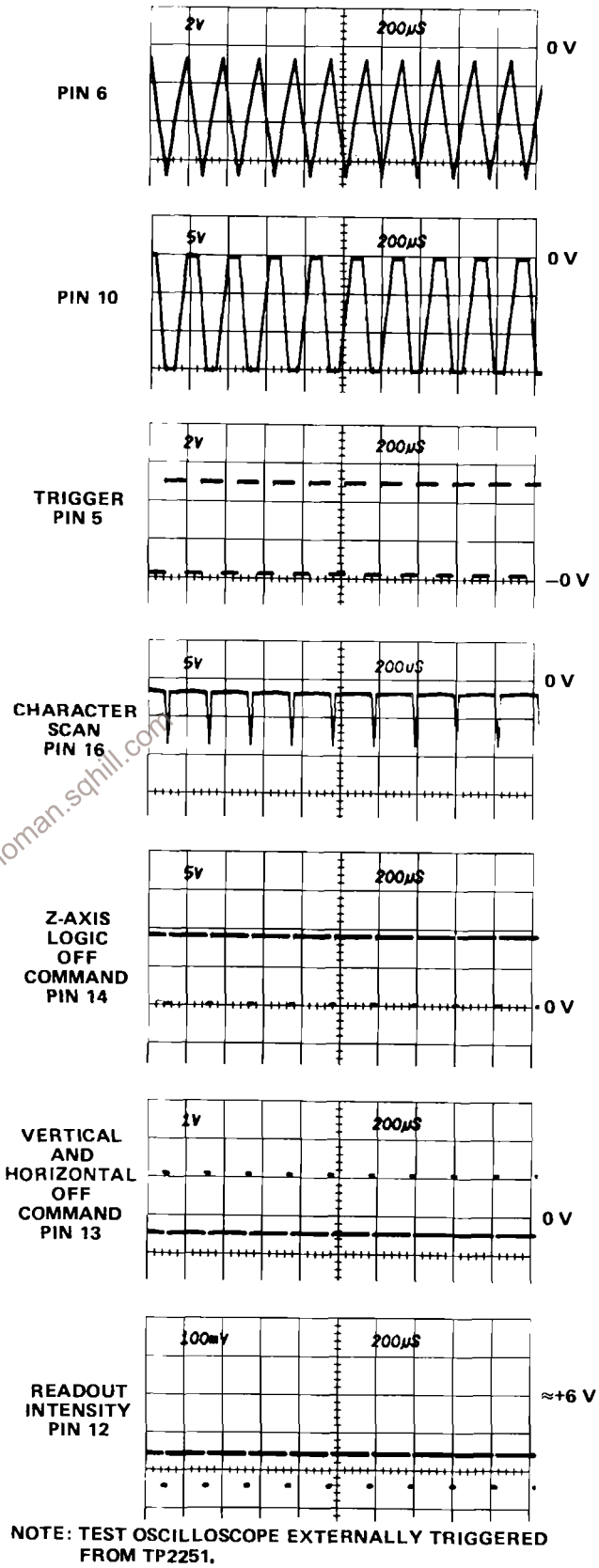

Figure 3-28. Output waveforms of Timer stage.

http://manoman.sqhill.com

running mode, so the waveform display is interrupted randomly to display characters. However, under certain conditions (such as single-shot photography), it is desirable that the Readout System operate in a triggered mode where the readout portion of the display is normally blanked out, but can be presented on command. The Readout Mode switch, S2110, determines the operating mode of the Readout System.

TIMER

Timer U2126 establishes the timing sequence for all circuits within the Readout System. This stage produces seven time-related output waveforms (see Figure 3-28). The triangle waveform produced at pin 6 forms the basis for the remaining signals. The basic period of this triangle waveform is about 250 microseconds as controlled by RC network R2135-C2135. The triangle waveform is clipped and amplified by U2126 to form the trapezoidal output signal at pin 10. The amplitude of this output signal is exactly 15 volts as determined by U2126 (exact amplitude necessary to accurately encode data in plug-in units; see Encoding the Data). The Trigger output at pin 5 provides the switching signal for the Time-Slot Counter and Word Trigger stages.

The signals at pins 12, 13, 14, and 16 are produced only when the triangle waveform has reached the lower level. The timing sequence of these waveforms is important to the operation of the Readout System (see expanded waveforms in Figure 3-29). The Z-Axis Logic OFF at pin 14 is produced first. This negative-going signal provides a blanking pulse to the Z-Axis Logic stage (see diagram 2) to blank the crt before the display is switched to the Readout System. It also produces the Strobe pulse through Q2138 and CR2142 to signal other stages within the Readout System to begin the sequence necessary to produce a character. The collector level of Q2138 is also connected to Character Generator No. 2, U2272, through CR2140. This activates U2272 during the quiescent period of the Strobe pulse (collector of Q2138 negative) and diverts the output current of Row Decoder U2185 to row 2. The purpose of this configuration is to prevent the Zeros Logic and Memory stage U2232 from storing incorrect data during the quiescent period of the Strobe pulse. When the Strobe pulse goes positive, CR2140 is reverse-biased to disconnect Q2138 from U2272 and allow the Row Decoder to operate in the normal manner.

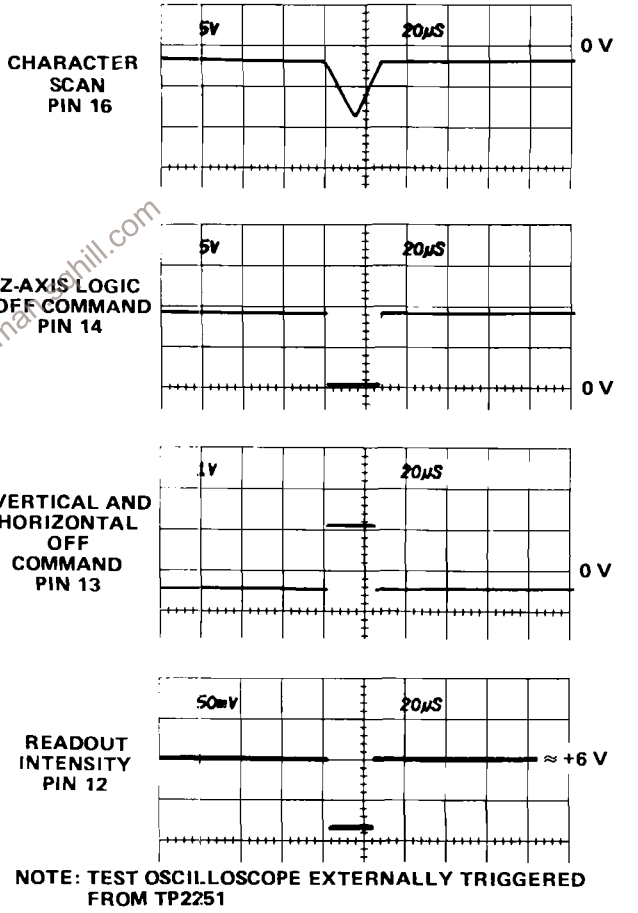

Figure 3-29. Detail of output at pins 12, 13, 14, and 16 of U2126.

The next signal to be produced is the Vertical and Horizontal OFF Command at pin 13. This positive-going signal disconnects the plug-in signals from the vertical and horizontal deflection systems so the plug-in

signals from the vertical and horizontal deflection systems so the plug-in units do not control the position of the crt beam during the readout display. The Ready signal derived from this output is connected to the Decimal Point Logic and Character Position Counter stage and the Format Generator stage.

The Readout Intensity output at pin 12 is produced next. This current is connected to the crt circuit to unblank the crt to the intensity level determined by the READOUT intensity control. The Character Scan ramp at pin 16 started to go negative as this timing sequence began. However, character generation does not start until the readout intensity level has been established. The triangular Character Scan ramp runs from about −2 volts to about −8.5 volts, then returns back to the original level. This waveform provides the scanning signal for the Character Generator stages. Full Character Scan adjustment R2128 sets the DC level of the Character Scan ramp for complete characters on the display.

The Timer stage operates in one of two modes as controlled by the Display-Skip level at pin 4. The basic mode just described is a condition that does not occur unless all ten characters of each word (80 characters total) are displayed on the crt. Under typical conditions only a few characters are displayed in each word. The Display-Skip level at pin 4 determines the period of the Timer output signal. When a character is to be generated, pin 4 is LO and the circuit operates as just described. However, when a character is not to be displayed, a HI level is applied to pin 4 of U2126 through CR2125 from the Display-Skip Generator stage. This signal causes the Timer to shorten its period of operation to about 210 microseconds. The waveforms in Figure 3-30 show the operation of the Timer stage when the Display-Skip condition occurs for all positions in a word. Notice that there is no output at pins 12, 13, 14, and 16 under this condition. This means that the crt display is not interrupted to display characters. Also notice that the triangle waveform at pin 6 does not go as far negative, and that the negative portion of the trapezoidal waveform at pin 10 is shorter. Complete

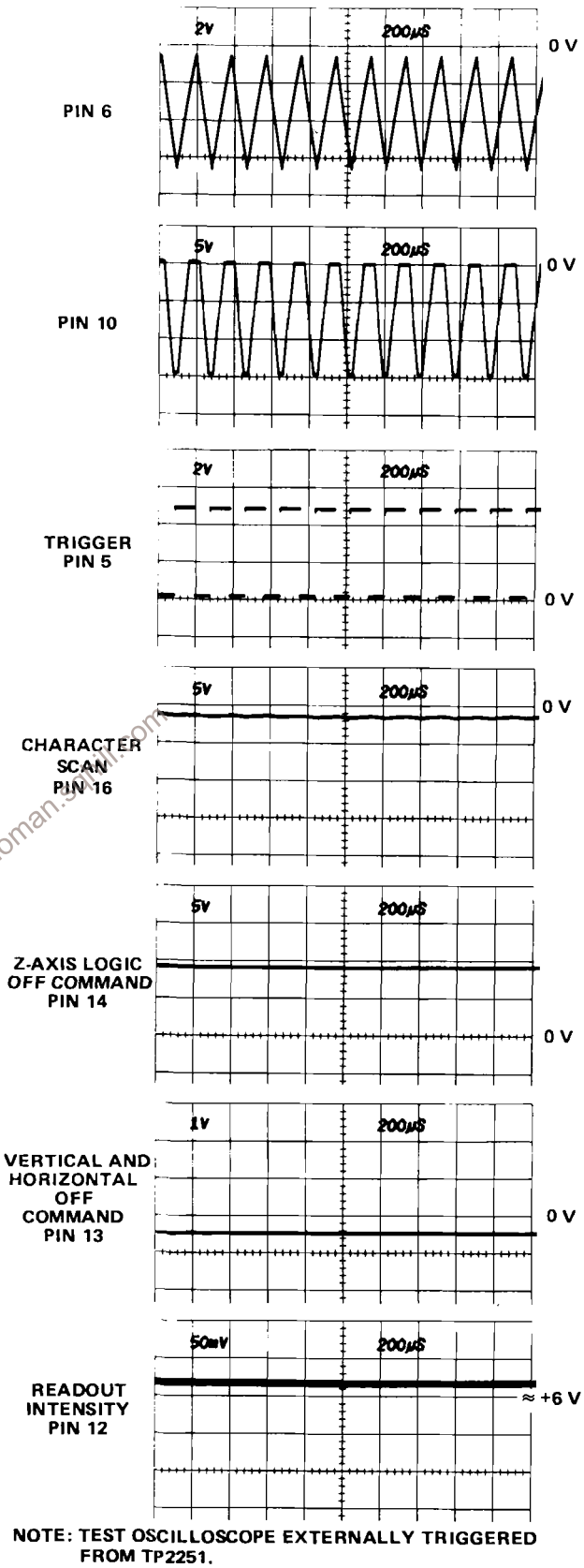

Figure 3-30. Timer stage operation when Display-Skip condition occurs.

http://manoman.com

details on operation of the Display-Skip Generator are given later.

The Timer operations is also controlled by the Single-Shot Lockout level at pin 2. If this level is LO, the Timer operates as just described. However, if the Single-Shot Lockout stage sets a HI level at this pin, the Timer stage is locked out and can not produce any output signals (see Single-Shot Lockout description for further information).

READOUT intensity control R1430 sets the intensity of the readout display independently of the A or B INTENSITY controls. The READOUT intensity control also provides a means of turning the Readout System off when a readout display is not desired. When R1430 is turned fully counterclockwise, the switch S1430 opens in series with the Readout Intensity line. The current to pin 11 of U2126 is interrupted, and at the same time, a positive voltage is applied to pin 4 through CR2124. The positive voltage switches the stage to the same conditions as were present under the Display-Skip condition. Therefore, the crt display is not interrupted to present characters. However, time-slot pulses continue to be generated.

TIME-SLOT COUNTER

Time-Slot Counter U2159 is a sequential switch which directs the trapezoidal waveform input at pin 8 to one of its 10 output lines. These time-slot pulses are used to interrogate the plug-in units to obtain data for the Readout System. The Trigger pulse at pin 15 switches the Time-Slot Counter to the next output line; the output signal is sequenced consecutively from time-slot 1 through time-slot 10. Figure 3-31 shows the time relationship of the time-slot pulses. Notice that only one line carries a time-slot pulse at any given time. When time-slot 10 is completed, a negative-going End-of-Word pulse is produced at pin 2. The End-of-Word pulse provides a drive pulse for the Word Trigger stage and also provides an enabling level to the Display-Skip Generator during time-slot 1 only.

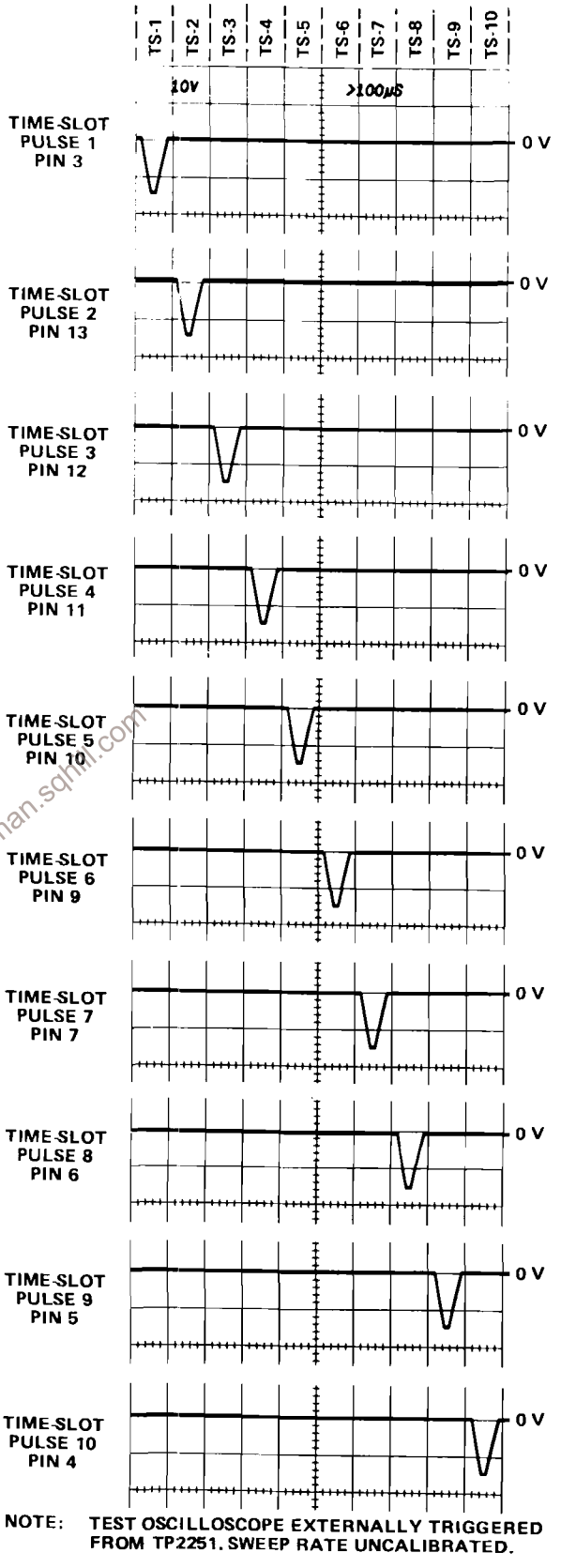

Figure 3-31. Time relationship of the time-slot (TS) pulses produced by U2159.

http://manoman.sqhi.com

Pin 16 is a reset input for the Time-Slot Counter. When this pin is held LO, the Time-Slot Counter resets to time-slot 1. The Time-Slot Counter can be reset in this manner only when a Jump Command is received by U2155C and D (see following discussion).

WORD TRIGGER

The Word Trigger stage is made up of U2155A and B. Quiescently, pin 3 of U2155A is LO as established by the operating conditions of U2155C and D. Therefore, the LO End-of-Word pulse produced by the Time-Slot Counter results in a HI level at pin 1 of U2155A. This level is inverted by U2155B to provide a negative-going Word Trigger pulse to the Channel Counter.

Also, a Word Trigger pulse is produced by U2155B when a Jump Command is received at pin 8 of U2155C. This condition can occur during any time-slot (see Row Decoder for further information on origin of the Jump Command). U2155C and D are connected as a bistable flip-flop. The positive-going Jump Command at pin 8 of U2155C produces a LO at pin 10. This LO is inverted by U2155D to produce a HI at pin 13, which allows pin 9 to be pulled HI through CR2156. The flip-flop has now been set and remains in this condition until reset, even though the Jump Command at pin 8 returns to its LO level. The HI output level at pin 13 turns on Q2159 to pull pin 16 of the Time-Slot Counter LO. This resets the Time-Slot Counter to time-slot 1 and holds it there until the Word Trigger is reset. At the same time, a HI level is applied to pin 4 of the Timer through CR2157 and CR2125. This HI level causes the Timer to operate in the Display-Skip mode, so a character is not generated.

http://manomanuals.com

The next Trigger pulse is not recognized by the Time-Slot Counter, since U2159 is locked in time-slot 1 by U2155. However, this Trigger pulse resets the Word Trigger stage through C2155. Pin 13 of U2155D goes LO to enable the Time-Slot Counter and Timer stages for the next time-slot pulse. Simultaneously, when U2155D switches output states, the resulting negative-going edge is connected to pin 3 of U2155A. This results in a negative-going Word Trigger output at pin 4 to advance the Channel Counter to the next word. When the next Trigger pulse is received at pin 15, the Time-Slot Counter returns to the normal sequence of operation and produces an output on the time-slot 1 line.

CHANNEL COUNTER

Channel Counter U2250 is a binary counter which produces the Channel Address Code for the Column and Row Decoder stages and the Format Generator stage. This code instructs these stages to sequentially select and display all six channels of data from the plug-ins. Table 3-3 gives the eight combinations of the Channel Address Code and the resultant channel selected with each combination.

READOUT CONTROL

Q2108 and Q2112, along with S2110, control the operating mode of the Readout System through the Single-Shot Lockout stage. When Readout Mode switch 2110 is in the Free-Run position, the Readout

TABLE 3-3
Channel Address Code

Pin 11 U2250	Pin 8 U2250	Pin 9 U2250	Channel Displayed
LO	LO	LO	Channel 2 Left Vertical
LO	LO	HI	Channel 1 Left Vertical
LO	HI	LO	Channel 2 Right Vertical
LO	HI	HI	Channel 1 Right Vertical
HI	LO	LO	Channel 2 A Horizontal
HI	LO	HI	Channel 1 A Horizontal
HI	HI	LO	Channel 2 B Horizontal
HI	HI	HI	Channel 1 B Horizontal

http://manoman.spbill.com

System runs continuously in a free-running manner. The emitter of Q2108 has no ground return in this position, so it can not conduct. The collector of Q2108 rises positive through R2108 to enable the Readout System.

In the Gate Trig'd position, the emitter of Q2108 is connected to ground through R2109 and S110 to produce a LO lockout level to the Single-Shot Lockout stage. At the end of the selected gate, a negative level is applied to the base of emitter-follower Q2112. The negative level at the emitter of Q2112 is differentiated by C2112-R2112. The resulting negative-going pulse reverse biases Q2108 to momentarily allow its collector to go HI. This enables the Single-Shot Lockout stage for a single-shot readout display. (For further information, see the following discussion.)

SINGLE-SHOT LOCKOUT

U2120 makes up the Single-Shot Lockout stage. This stage allows a single readout frame (eight complete words) to be displayed on the crt, after which the Readout System is locked out, so further readout displays are not presented until the circuit is reset. U2120B and U2120C are connected to form a bistable flip-flop. For normal operation, pin 8 of U2120C is pulled HI through R2108. This activates U2120C to result in a LO output level at pin 10, enabling the Timer stage to operate in the free-running manner described previously.

The output of the Single-Shot Lockout stage remains LO to allow U2126 to operate in the free-running mode until a LO is received at pin 8 of U2120C. When this occurs, the output level at pin 10 of U2120C does not change immediately. However, the Readout System is now enabled as far as the single-shot lockout function is concerned.

NOTE

If the Channel Counter has not completed word eight (Channel 1 of B HORIZ unit), the Readout System continues to operate in the normal manner. However, when word eight is completed, the negative-going End-of-Frame pulse is produced at pin 11 of U2250 as the Channel Counter shifts to the code necessary to display word one. This pulse is coupled to pin 6 of U2120B. The momentary HI at pin 6 activates U2120B and its output goes LO to disable U2120C (pin 8 already LO). The output of U2120C goes HI to disable the Timer, so it operates in the Display-Skip mode. The HI at pin 10 of U2120C also holds U2120B enabled, so it maintains control of the flip-flop.

The Single-Shot Lockout stage remains in this condition until a positive-going trigger pulse is applied to pin 8 of U2120C. This trigger pulse produces a LO at pin 10 of U2120C to enable U2126 and disable U2120B. Now, the Timer can operate in the normal manner for another complete frame. When word eight is completed, the Channel Counter produces another End-of-Frame pulse to again lock out the Timer stage. (For further information on the Readout Mode, see the Readout Control description.)

ENCODING THE DATA

http://manuals.spbill.com

Data is conveyed from the plug-in units to the Readout System in the form of an analog (current level) code. The characters that can be selected by the encoded data are shown on the Character Selection Matrix (see Figure 3-25). Each character requires two currents to define it; these currents are identified as the column current and the row current, corresponding to the column and row of the matrix. The column and row data is encoded by programming the plug-in units. Figure 3-32 shows a typical encoding scheme using resistors for a voltage-sensing amplifier plug-in unit. Notice that the 10 time-slot (TS) pulses produced by the Time-Slot Counter stage are connected to the plug-in unit. However, time-slots 5, 6, 7, and 10 are not used by the plug-in unit to encode data when using the Standard Readout Format. (See Table 3-2 for Standard Readout Format.) The amplitude of the time-slot pulses is exactly −15 volts as determined by the Timer stage. Therefore, the resultant output current from the plug-in units can be accurately controlled by the programming resistors in the plug-in units.

For example, in Figure 3-32 resistors R10 through R90 control the row analog data, which is connected back to the Readout System. Figure 3-33A shows an idealized output current waveform of row analog data, which results from the time-slot pulses. Each of the row levels of current shown in these waveforms corresponds to 100 microamperes of current. The row numbers on the left-hand side of the waveform correspond to the rows in the Character Selection Matrix (see Figure 3-25). The row analog data is connected back to the Readout System via terminal B37 of the plug-in interface.

The Column analog data is defined by resistors R110 through R190. The program resistors are connected to the time-slot lines by switch closures to encode the desired data. The data as encoded by the circuit shown in Figure 3-32 indicates a 100-microvolt sensitivity with the crt display inverted and calibrated deflection factors. This results in the idealized output current waveforms shown in Figure 3-33B at the column analog data output, terminal A37 of the plug-in interface.

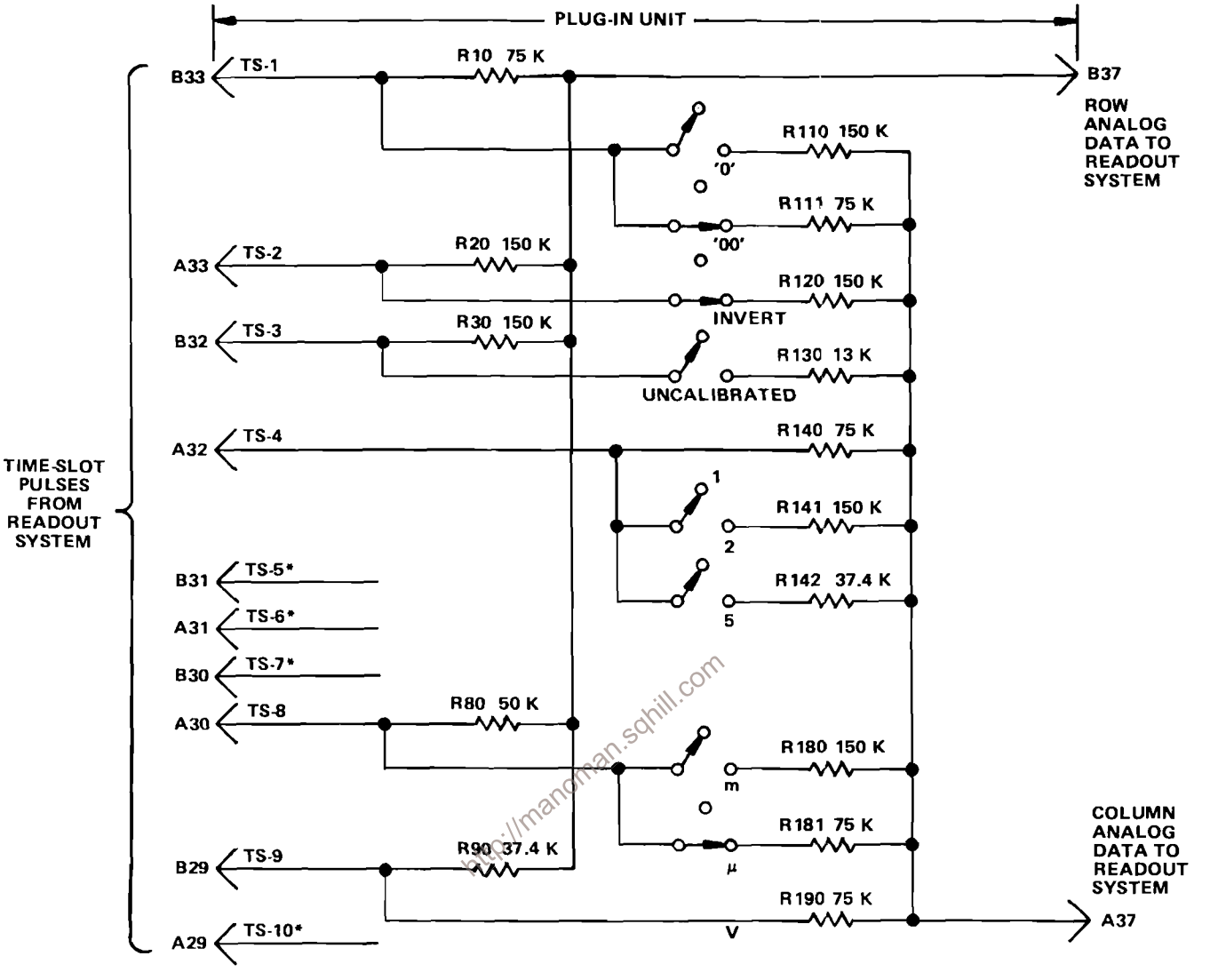

* NOT USED IN STANDARD FORMAT.

Figure 3-32. Typical encoding scheme for voltage-sensing amplifier plug-in unit. Coding shown for deflection factor of 100 microvolts.

Resistor R111, connected between time-slot 1 and the column analog data output, encodes two units of current during time-slot 1. Referring to the Character Selection Matrix, two units of column current, along with the two units of row current encoded by resistor R10 (row 3), indicates that two zeros should be added to the display. Resistor R120 adds one unit of column current during time-slot 2 and, along with the one unit of current from the row output, the Readout System is instructed to add an invert arrow to the display. Resistor R130 is not connected to the time-slot 3 line, since the deflection factor is calibrated. Therefore, there is no column current output during this time-slot and no display on the crt. (See Display-Skip Generator for further information.)

During time-slot 4, two units of column current are encoded by R140. There is no row current encoded during this time-slot, this results in the numeral 1 being displayed on the crt. Neither row nor column analog data is encoded during time-slots 5, 6, and 7 as defined by the Standard Readout Format.

http://manoman.sqhill.com

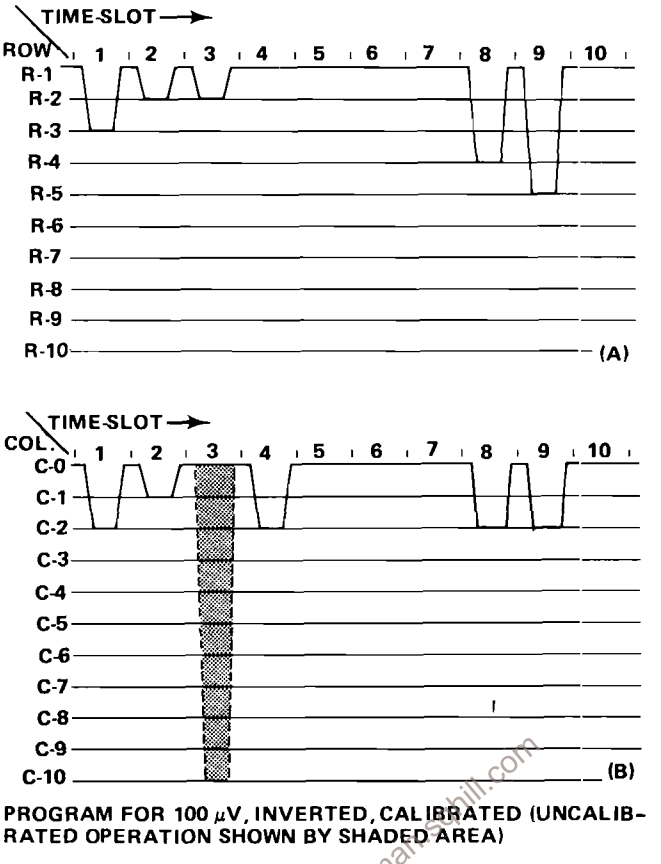

http://manomanuals.ihill.com

Figure 3-33. Idealized current waveforms of: (A) Row analog data, (B) Column analog data.

During time-slot 8, two units of column current and three units of row current are encoded by resistors R181 and R80, respectively. This addresses the μ prefix in the Character Selection Matrix.

The final data output is provided from time-slot 9 by R190 connected to the column output and R90 to the row output. These resistors encode three units of column current and four units of row current to cause a V (volts) to be displayed. Time-slot 10 is not encoded, in accordance with the Standard Readout Format. The resultant crt readout will be ↘100 μV.

In the above example, the row analog data was programmed to define which row of the Character Selection Matrix was address to obtain information in each time-slot. The column data changes to encode the applicable readout data as the operating conditions change. For example, if the variable control of the plug-in unit was activated, R130 would be connected between time-slot 3 and the column analog data output line. This encodes 10 units of column current (see shaded area in time-slot 3 of the waveform shown in Figure 3-33B). Since one unit of row current is also encoded during this time-slot by R30, a > symbol is added to the display. The crt readout will now show ↘> 100 μV. In a similar manner, the other switches can change the encoded data for the column output and thereby change the readout display. See the descriptions which follow for decoding this information.

The column analog data encoded by most plug-in units can be modified by attenuator probes connected to the input connectors of amplifier plug-in units. A special coding ring around the input connector of the plug-in unit senses the attenuation ratio of the probe (with readout-coded probes only). The probe contains a circuit which provides additional column current. For example, if a 10X attenuator probe is connected to a plug-in unit encoded for 100 microvolts as shown in Figure 3-32, an additional unit of current is added to the column analog data during time-slot 1. Since two units of current were encoded by R111 (see Figure 3-32), this additional current results in a total of three units of column analog current during this time-slot. Referring to the Character Selection Matrix, three units of column current, along with the two units of row current encoded by R10, indicates that the prefix should be shifted one column to the left. Since this instruction occurs in the same time-slot that previously indicated that two zeros should be added to the display and only one instruction can be encoded during a time-slot, the zeros do not appear in the display. The crt readout will now be changed to 1 mV (readout program produced by plug-in same as for previous example).

Three other lines of information are connected from the plug-in compartments to the Readout System. The column and row analog data from Channel 2 of a dual-channel plug-in are connected to the Readout System through terminals A38 and B38 of the plug-in interface, respectively. Force readout information is encoded on terminal A35; the function of this input is described under Column and Row Data Switches.

The preceding information gave a typical example of encoding data from an amplifier plug-in unit. Specific encoding data and circuitry is shown in the individual plug-in unit manuals.

http://manomar.sqhill.com

COLUMN AND ROW DATA SWITCHES

The encoding data from the plug-in units is connected to the Column and Row Data Switch stages. A column-data line and a row-data line convey analog data from each of the eight data sources (two channels from each of the four plug-in compartments).

The Column Data Switch U2190 and the Row Data Switch U2180 receive the Channel Address Code from the Channel Counter. This binary code directs the Column Data Switch and the Row Data Switch as to which channel should be the source of the encoding data. Table 3-3 gives the eight combinations of the Channel Address Code and the resultant channel selected with each combination. These stages have nine inputs and provide a time-multiplexed output at pin 7, which includes the information from all of the input channels. Eight of the nine inputs to each stage originate in the plug-in units; the ninth input comes from a special data-encoding network composed of resistors R2191 through R2199 and R2201 through R2209. (See Zeros Logic and Memory description for further information on ninth channel.)

In addition to the encoding data inputs from the plug-in units, inputs are provided to the Column Data Switch from the VERTICAL MODE and HORIZONTAL MODE switches to inhibit the readout for any plug-in unit(s) not selected for display (see Diagram 1). When a plug-in unit is selected, a HI level is applied to the inhibit input for the opposite channel. The channel inhibit lines are LO only

when the associated plug-in unit has been selected for display. When a unit is not selected, the respective line is HI to forward bias the associated diodes: CR2162-CR2163, CR2166-CR2167, CR2170-CR2171, or CR2174-CR2175. The forward-biased diodes cause the channel switches to bypass the encoded data from the inhibited channel. However, since it may be desired to display information from special-purpose plug-in units (even through they do not produce a normal waveform display on the crt), a feature is provided to over-ride the channel inhibit. This is done by applying a LO to the associated Force Readout input. The LO level diverts the HI channel-inhibit current and allows the data from this plug-in unit to reach the Column Data Switch, even though it has not been selected for display by the mode switch.

Row Match adjustment R2182 sets the gain of the Row Data Switch to match the gain of the Row Decoder for correct output. Column Match adjustment R2213 performs the same function for the Column Data Switch stage.

DISPLAY-SKIP GENERATOR

The Display-Skip Generator is made up of Q2215, Q2233, Q2225, and Q2229. This stage monitors the time-multiplexed column data at the output of the Column Data Switch during each time-slot to determine if the information at this point is valid data that should result in a crt display. Quiescently, there are about 100 microamperes of current flowing through R2213 from Q2240 and the Zeros Logic and Memory stage. (The purpose of this quiescent current will be discussed in connection with the Zeros Logic and Memory stage.) This current biases Q2215A so that its base is about 0.2 volt more positive than the base of Q2215B in the absense of column data. Therefore, since Q2215A and Q2215B are connected as a comparator, Q2215A will remain on unless its base is pulled more negative than the base of Q2215B.

http://manuals.tsqhill.com

The analog data output from the Column Data Switch produces a 0.5-volt (approximately) change for each unit of column current that has been encoded by the plug-in unit. Whenever any information appears at the output of the Column Data Switch, the base of Q2215A is pulled more negative than the base of Q2215B, resulting in a negative (LO) Display-Skip output to the Timer stage through Q2225. Recall that a LO was necessary at the skip input of the Timer so it could perform the complete sequence necessary to display a character.

Q2223-Q2229 also provide Display-Skip action. The End-of-Word level connected to their emitters is LO only during time-slot 1. This means they are enabled only during this time-slot. These transistors allow the Zeros Logic and Memory stage to generate a Display-Skip signal during time-slot 1 when information that is not to be displayed on the crt has been stored in memory (further information is given under Zeros Logic and Memory).

COLUMN AND ROW DECODERS

The Column Decoder U2244 and Row Decoder U2185 sense the magnitude of the analog voltages at their inputs (pin 10) and produce a binary output on one of ten lines corresponding to the column or row data encoded by the plug-in unit. These outputs provide the Column Digital Data and Row Digital Data, which is used by the Character Generator stages to select the desired character for display on the crt. The column and row data is also used through the Readout System to perform other functions.

The input current at pin 9 of the Column Decoder stage is steered to only one of the ten Column Digital Data outputs. When a Display-Skip signal is present (collector of Q2225 HI), pin 9 is pulled HI through CR2226. This ensures that no current is connected to the Character Generator stage under this condition. Notice the corresponding input on the Row Decoder. This input is connected to ground and causes only one of the ten row outputs to saturate to ground.

The network at the input of the Row Decoder, made up of Q2153 and its associated components, is a Row-14 detector which produces the Jump Command. This row current is encoded by special-purpose plug-ins to cause all or part of a word to be jumped. Whenever row 14 (thirteen units of row current, or 1.3 milliamperes) is encoded, the base of Q2153 is pulled negative enough so that this transistor is reverse biased to produce a HI Jump Command output at its collector. The Jump Command is connected to the Word Trigger stage to advance the Channel Counter to the next word and to reset the Time-Slot Counter to time-slot 1.

ZEROS LOGIC AND MEMORY

The Zeros Logic and Memory stage U2232 stores data encoded by the plug-in units to provide zeros-adding and prefix-shifting logic for the Readout System. The Strobe pulse at pin 15 goes positive when the data has stabilized and can be inspected. This activates the Zeros Logic and Memory stage so that it can store the encoded data. A block representation of the memory sequence is shown in Figure 3-34.

http://manoman.tripod.com

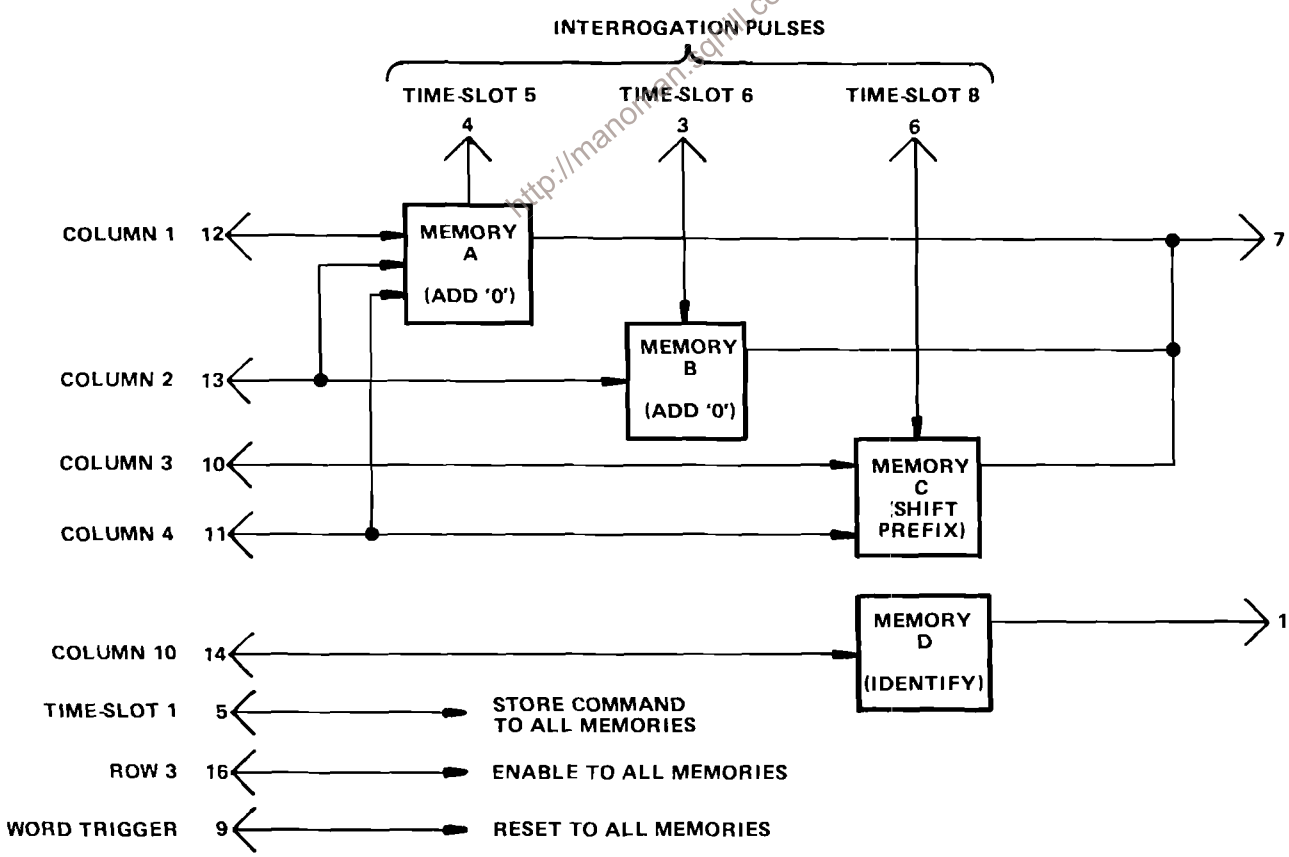

Figure 3-34. Block representation of memory sequence in U2232.

INPUT PIN OF U2232 ACTIVATED	COMMAND	TIME-SLOTS
14	IDENTIFY	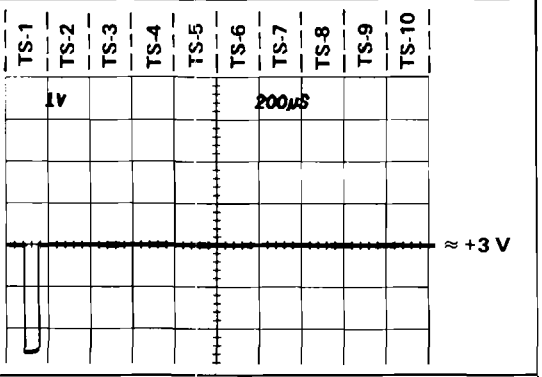
12	ADD ONE ZERO	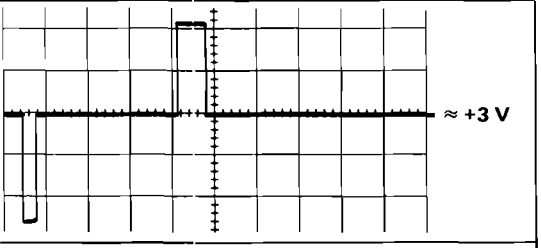
13	ADD TWO ZEROS	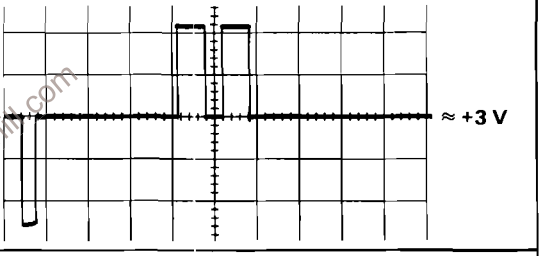
10	DECREASE PREFIX	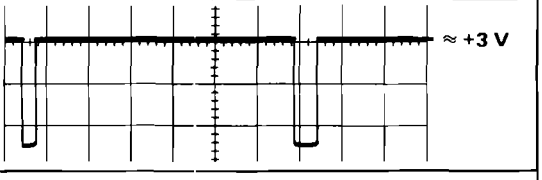
11	DECREASE PREFIX AND ADD ONE ZERO	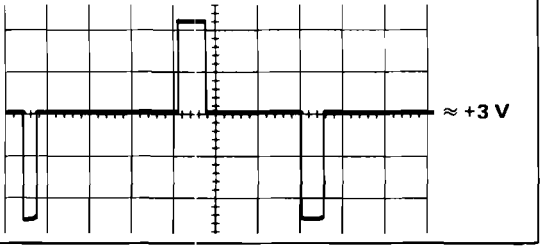

http://manoman.sqhit.com

Typical output waveforms for the five possible input conditions that can occur are shown in Fig. 3-35. When time-slot 1 occurs, a store command is given to all of the memories. If the plug-in unit encoded data for column 1, 2, 3, 4, or 10 during time-slot 1, the appropriate memory (or memories) is set. Notice that row 3 information from the Row Decoder must also be present at pin 16 for data to be stored in the memory of U2232.

If data was encoded during time-slot 1, a negative-going output is produced at pin 7 while the memories are being set. This negative-going pulse is connected to the base of Q2229 in the Display-Skip Generator to produce a Display-Skip output. Since the information encoded during time-slot 1 was only provided to set the memories and not intended to be displayed on the crt at this time, the Display-Skip output prevents a readout display during this time-slot.

During time-slot 5, memory A is interrogated. If information was stored in this memory, a positive-going output is produced at pin 7. This pulse is connected to pin 10 of the Column Decoder through Q2240 to add one unit of current at the input of the Column Decoder. This produces a zero after the character displayed during time-slot 4. During time-slot 6, memory B is interrogated to see if another zero should be added. If another zero is necessary, a second positive output is produced at pin 7, which again results in a column 1 output from the Column Decoder and a second zero in the crt display.

Finally, memory C is interrogated during time-slot 8 to obtain information on whether the prefix should be changed, or left at the value that was encoded. If data has been encoded that calls for a shift in prefix, a negative-going output level is produced at pin 7. This negative level subtracts one unit of column current from the data at the input to the Column Decoder. Notice on the Character Selection Matrix of Fig. 3-25 that when row 4 is programmed, a reduction of one column results in a one-column shift of the prefix. For example, with the 100 μV program shown in Fig. 3-32, if the data received from the plug-in called for a shift in prefix, the crt readout would be changed to 1 mV (zeros deleted by program, see Encoding the Data).

http://maagman.sqhlf.com

The 100 microamperes of quiescent current through R2213 provided by Q2240 (see Display-Skip Generator) allows the prefix to be shifted from m (100 microamperes column current, column 1) to no prefix (zero column current, column zero) so only the unit of measurement encoded during time-slot 9 is displayed. Notice that reducing the prefix program from column 1 to column 0 programs the Readout System to not display a character at this readout location.

A further feature of the Zeros Logic and Memory is the Identify function. If 10 units of column current are encoded by the plug-in unit along with row 3 during time-slot 1, the Zeros Logic and Memory produces a negative-going output pulse at pin 1 to switch the Column Data Switch and Row Data Switch to the ninth channel. Then, time-slot pulses 2 through 9 encode an output current through resistors R2191-R2199 for column data and R2201-R2209 for row data. This provides the currents necessary to display the word IDENTIFY in the word position allotted to the channel that originated the Identify command. After completion of this word, the Column Data Switch and Row Data Switch continue with the next word in the sequence.

The Word Trigger signal from the Word Trigger stage is connected to pin 9 of U2232 through C2242. At the end of each word of readout information, this pulse goes LO. This erases the four memories in the Zeros Logic and Memory in preparation for the data to be received from the next channel.

CHARACTER GENERATORS

The Character Generator stage consists of five similar integrated circuits (U2270 through U2278), which generate the X (horizontal) and Y (vertical) outputs at pin 16 and 1, respectively, to produce the character display on the crt. Each integrated circuit can produce 10 individual characters. U2270 (designated 'Numerals') can produce the numerals 0 through 9 shown in row 1 of the Character Selection Matrix (Fig. 3-25). U2272 can produce the symbols shown in row 2 of the Character Selection Matrix and U2274 produces the prefixes and some letters, used as prefixes, shown in row 4. U2276 and U2278 produce the remaining letters shown in rows 5 and 6 of the Character Selection Matrix.

All of the Character Generator stages receive the Column Digital Data from the Column Decoder U2244 in parallel. However, only one of the Character Generators receives row data at a particular time and only the stage receiving this row data is activated. For example, if column 2 is encoded, the five Character Generators are enabled so that either a 1, <, μ, V, or an N can be produced. If row 4 has been encoded at the same time, only the Prefix Character Generator U2274 will produce an output to result in a 'μ' being displayed. The activated Character Generator provides current outputs for the Format Generator to produce the selected character on the crt. In a similar manner, any of the characters shown in the Character Selection Matrix can be displayed by correct addressing of the row and column.

DECIMAL POINT LOGIC AND CHARACTER POSITION COUNTER

Decimal Point Logic and Character Position Counter U2260 performs two functions. The first function is to add a staircase current to the X (horizontal) signal to space the characters horizontally on the crt. After each character is generated, the negative-going edge of the Ready signal at pin 5 advances the Character Position Counter. This produces a current step output at pin 3 which, when added to the X signal, causes the next character to be displayed one character space to the right. This stage can also be advanced when a Space instruction is encoded so a space is left between the displayed characters on the crt. Row 10 information from the Row Decoder is connected to pin 4 of U2260. When row 10 and column 0 are encoded, the output of this stage advances one step to move the next character another space to the right. However, under this condition, no display is produced on the crt during this time-slot, since the Character Generators are not activated.

Time-slot pulses 1, 2, and 3 are also connected to pin 4 of U2260 through VR2262, VR2263, and VR2264 respectively and R2262-R2265. This configuration adds a space to the displayed word during time-slots 1, 2, and 3 even if information is not encoded for display during these time-slots. With this feature, the information displayed during time-slot 4 (scaling data) always starts in the fourth character position whether data has been displayed in the previous time-slots or not. Therefore, the resultant crt display does not shift position as normal-invert or cal-uncal information is encoded. The Word Trigger pulse connected to pin 8 resets the Character Position Counter to the first character position at the end of each word.

The Decimal Point Logic portion of this stage allows decimal points to be added to the crt display. With the Standard Readout Format, row 7, encoded coincident with columns 3 through 7, addresses a decimal at one of the five locations identified in row 7 of the Character Selection Matrix (Fig. 3-25). This instruction refers to the decimal point location in relation to the total number of characters possible in one

word (see Fig. 3-36). For example, column 3 encoded with row 7 during time-slot 1 places a decimal point in location No. 3. As shown in Fig. 3-36, this displays a decimal point after the third character that can be displayed on the crt. (The first three time-slots produce a space whether data is encoded or not; see previous paragraph.)

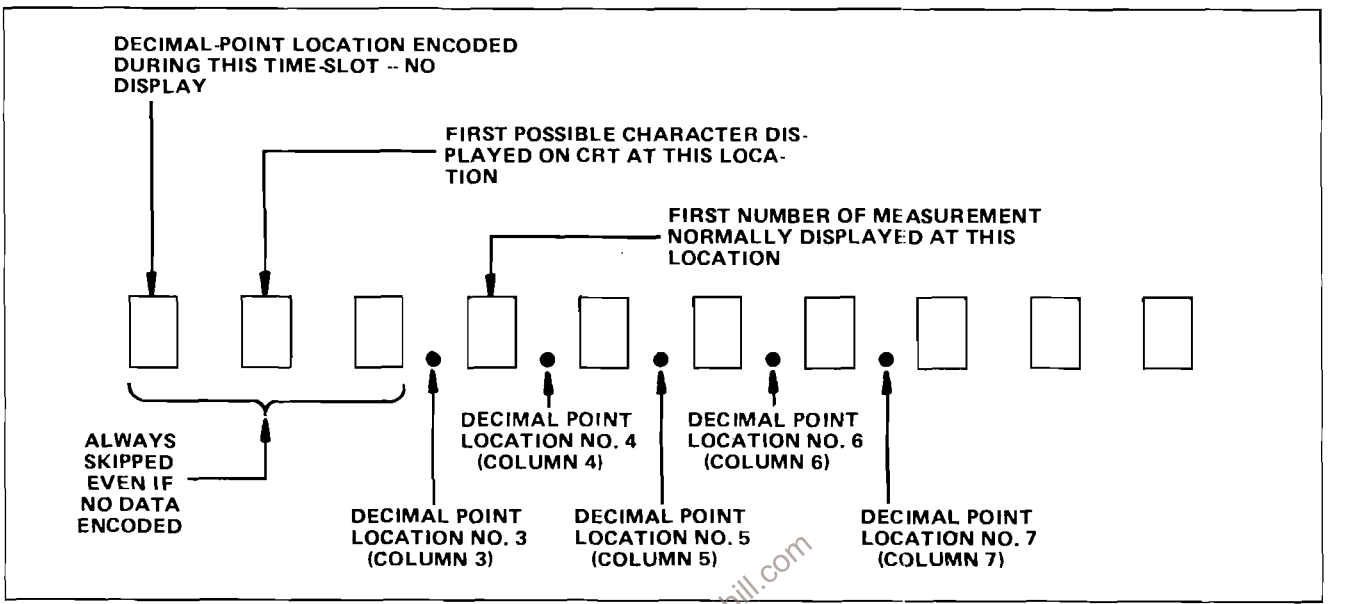

Figure 3-36. Readout word relating 10 possible character locations to the decimal point instructions that can be encoded, and the resultant crt display.

http://manoman.sqhill.com

When decimal-point data is encoded, the crt is unblanked so a readout display is presented. Since row 7 does not activate any of the five Character Generators, the crt beam is deflected vertically by the application of row-7 data to the Y input of the Format Generator through R2280. This places the decimal point between the characters along the bottom line of the readout word. After the decimal point is produced in the addressed location, the crt beam returns to the location indicated by the Character Position Counter to produce the remainder of the display.

FORMAT GENERATOR

The X- and Y- deflection signals produced by the Character Generator stage are connected to pins 2 and 7, respectively, of Format Generator U2284. The Channel Address Code from the Channel Counter is also connected to pins 1, 8, and 15 of this stage. The Channel Address Code directs the Format Generator to add current to the X and Y signals to deflect the crt beam to the area of the crt associated with the plug-in channel that originated the information (see Fig. 3-24). The Channel Address Code and the resultant word positions are shown in Table 3-3. The Ready signal at pin 13 (coincident with the Vertical and Horizontal OFF Command output) activates this stage when a character is to be displayed on the crt. R2274 and R2275 determine the horizontal and vertical size, respectively, of the displayed characters. R2273 is the Character Height adjustment. The character position current from the Decimal Point Logic and Character Position stage is added to the X (horizontal) input signal to space the characters horizontally on the crt (see previous discussion).

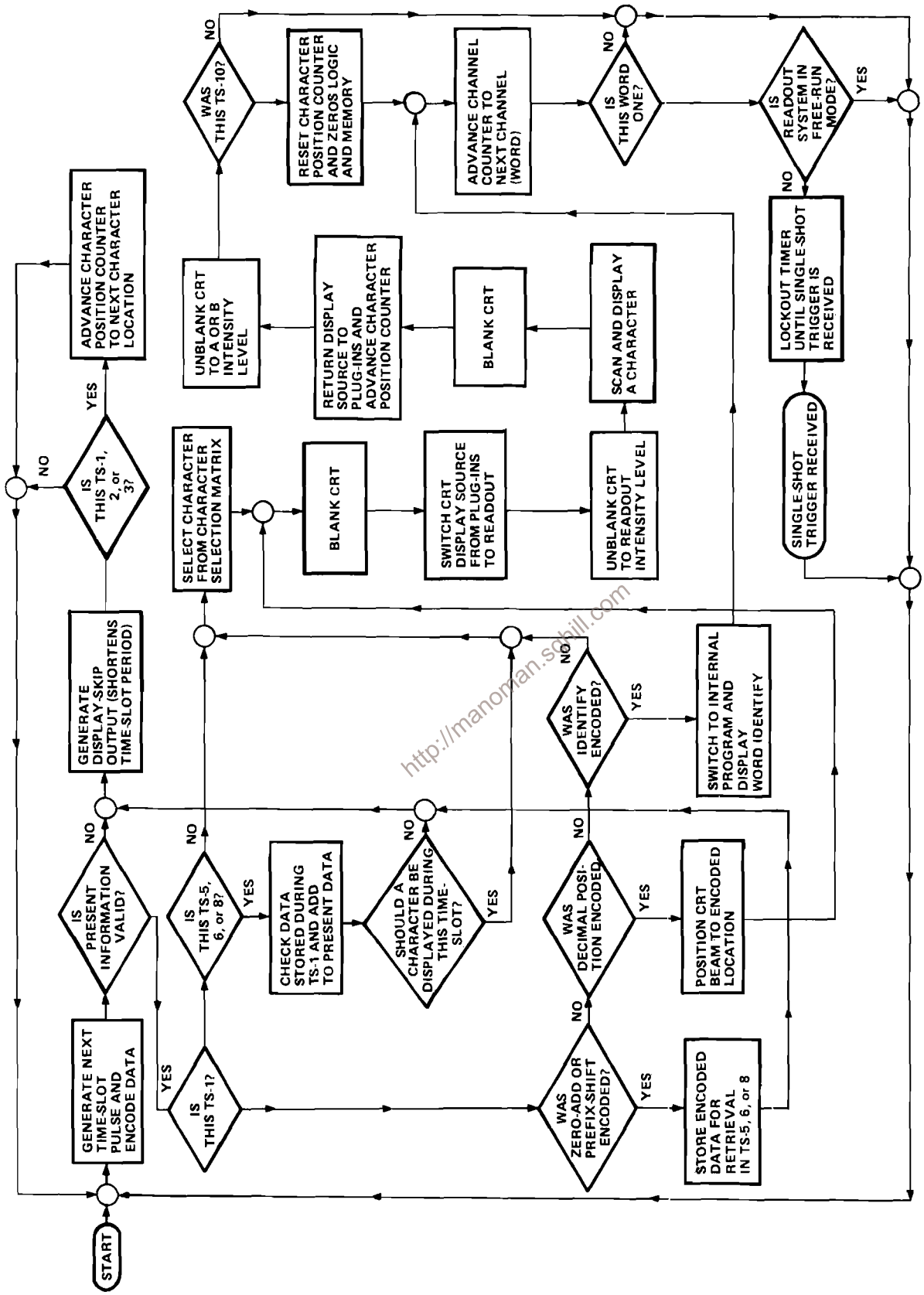

Figure 3-37. Flow chart for character generation by the Readout System.

Y-OUTPUT AMPLIFIER

The Y-output signal at pin 6 of Format Generator U2284 is connected to the Y-Output Amplifier Q2287-Q2299. This stage provides a low-impedance load for the Format Generator while providing isolation between the Readout System and the driven circuits. Vertical Separation adjustment R2291 changes the gain of this stage to control the vertical separation between the readout words displayed at the top and bottom of the graticule area.

X-OUTPUT AMPLIFIER

The X-Output Amplifier Q2286-Q2296 operates like the Y-Output Amplifier, to provide the horizontal deflection from the readout signal available at pin 4 of U2284. The gain of this stage is fixed by the values of the resistors in the circuit.

DISPLAY SEQUENCE

Figure 3-37 shows a flow chart for the Readout System. This chart illustrates the sequence of events that occurs in the Readout System each time a character is generated and displayed on the crt.

http://manoman.sqhill.com

STORAGE 10

As shown in the simplified block diagram (Figure 3-38), the front panel controls select and operate the various pulse producing (logic) circuits. These pulses are applied to the input circuits of the operational amplifiers connected to the storage elements of the crt. The operational amplifiers, controlled by the logic pulses, provide the voltage levels necessary for operation of these storage elements. The operational amplifier output levels for the different storage modes are illustrated in Figures 3-40, 3-41, 3-42, and 3-43.

LOGIC

The timing sequence of the major logic pulses is shown in Figure 3-29. Since most timing functions begin with an erase cycle, this portion will be discussed first.

When the MANual ERASE push button is pressed, a positive pulse is coupled to the base of Q1539. This turns on Q1539, which turns off Q1541, allowing pin 2 of U1545A go HI. When not in SAVE (pin 1 of U1545A is HI in SAVE), this triggers the one-shot to start the erase cycle. The erase pulse stays HI for 100 milliseconds, as determined by R1544 and C1544.

Grounding the REMOTE ERASE input couples a negative step to the cathode of CR1538, which turns off Q1541 and allows pin 2 of U1545A to go HI, starting an erase cycle.

PERIODIC ERASE is accomplished by charging C1517 to the firing voltage of Q1518 (a programmable-unijunction transistor). When Q1518 fires, it discharges C1517 through R1519, momentarily blocking the conduction of Q1541. This too, pulses pin 2 of U1545A HI, causing it to change state and output an erase pulse. The maximum time between erase cycles is set up by C1517 and R1517. This timing is varied by the amount of current flowing through Q1513. Current through Q1513 is adjusted by the PERIODIC ERASE control, R1488B. If a sweep gate is present on the base of Q1524, the gate of Q1518 is held at approximately eight volts to prevent Q1518 from firing until after the sweep gate ends.

The erase pulse, output of U1545A at pin 13, is connected to the emitters of Q1718 and Q1697. When the erase pulse goes HI, it causes the 600-volt erase waveform (through the switching action of Q1718)

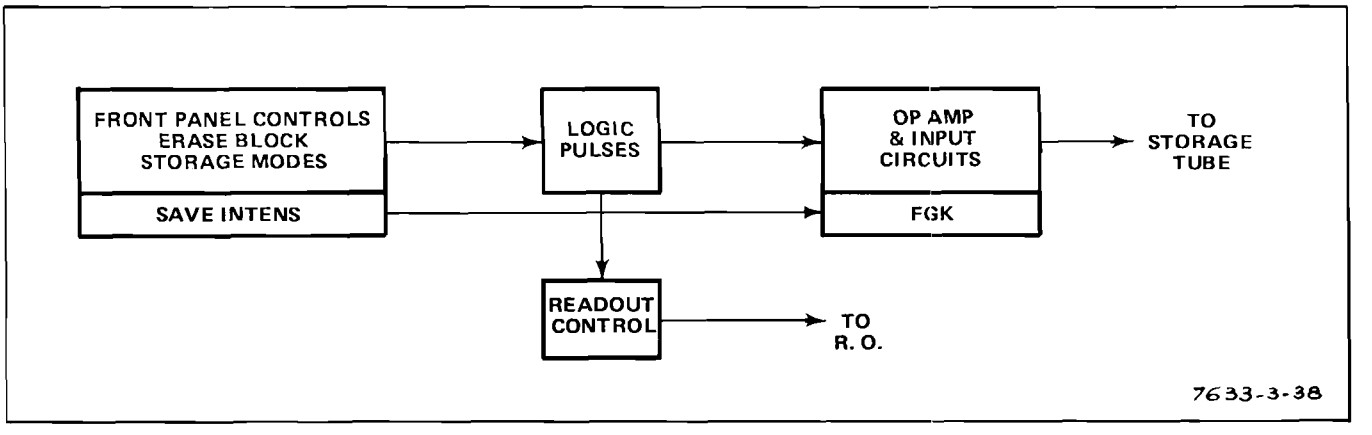

Figure 3-38. Storage circuit simplified block diagram.

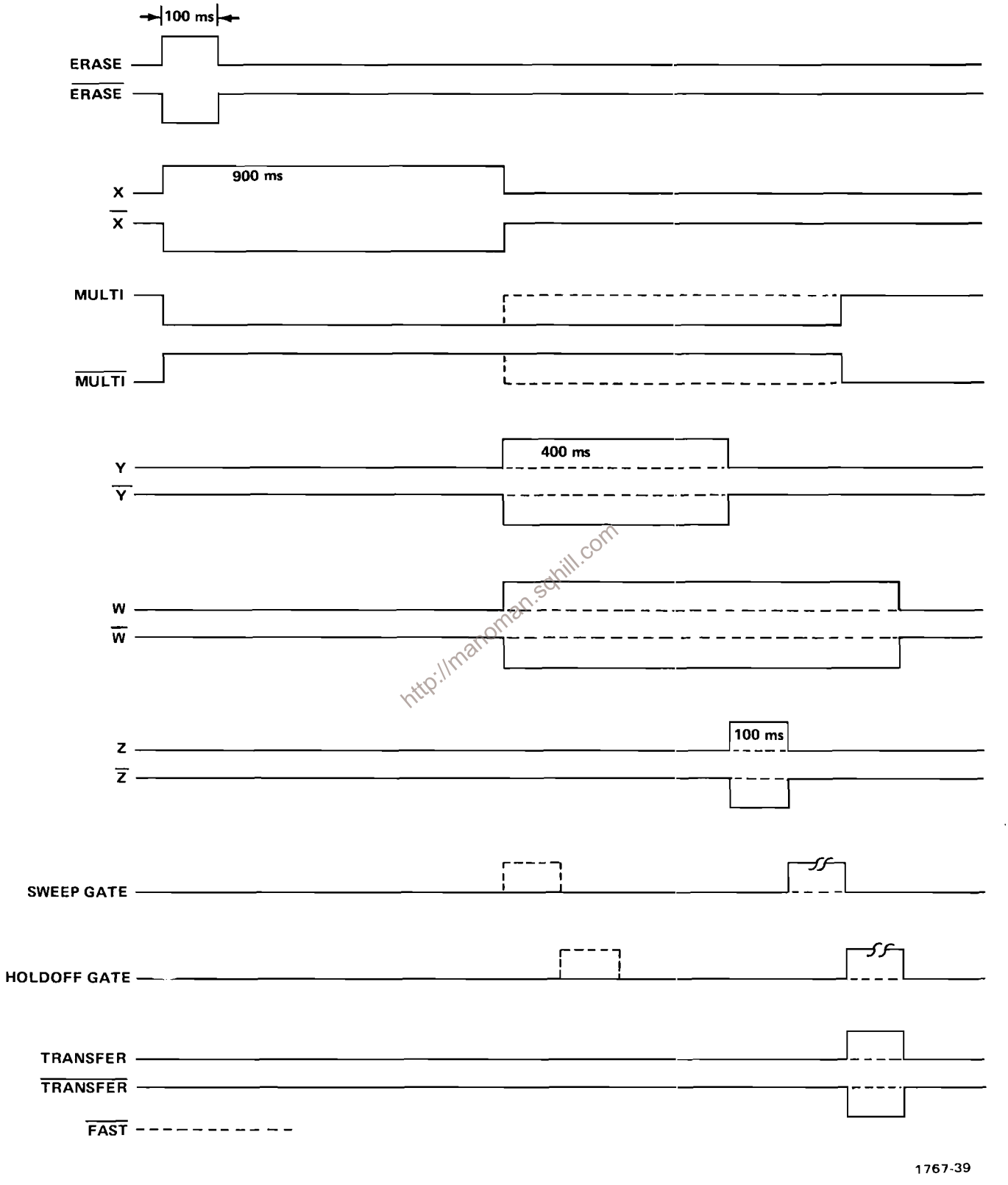

http://manoman.sqhill.com

Figure 3-39. Time relationship of Storage logic pulses.

then goes to −15V and ramps up to the Bistable level (through the switching action of Q1697) on the Front Mesh. This waveform is shown in Figure 3-42.

When it goes HI, the erase pulse also causes Q1569 to saturate. This pulls pin 1 of U1605A LO, causing it to change state. Therefore, pin 13 (the X output) of U1605A goes HI for a 900 millisecond interval. This timing interval is determined by R1601 and C1601.

In the FAST mode, when the output at pin 4 (the $\overline{X}$ output) of U1605A returns to a HI logic level (after 900 milliseconds), it causes U1605B to change state. The LO on the $\overline{Y}$ output of U1605B is connected

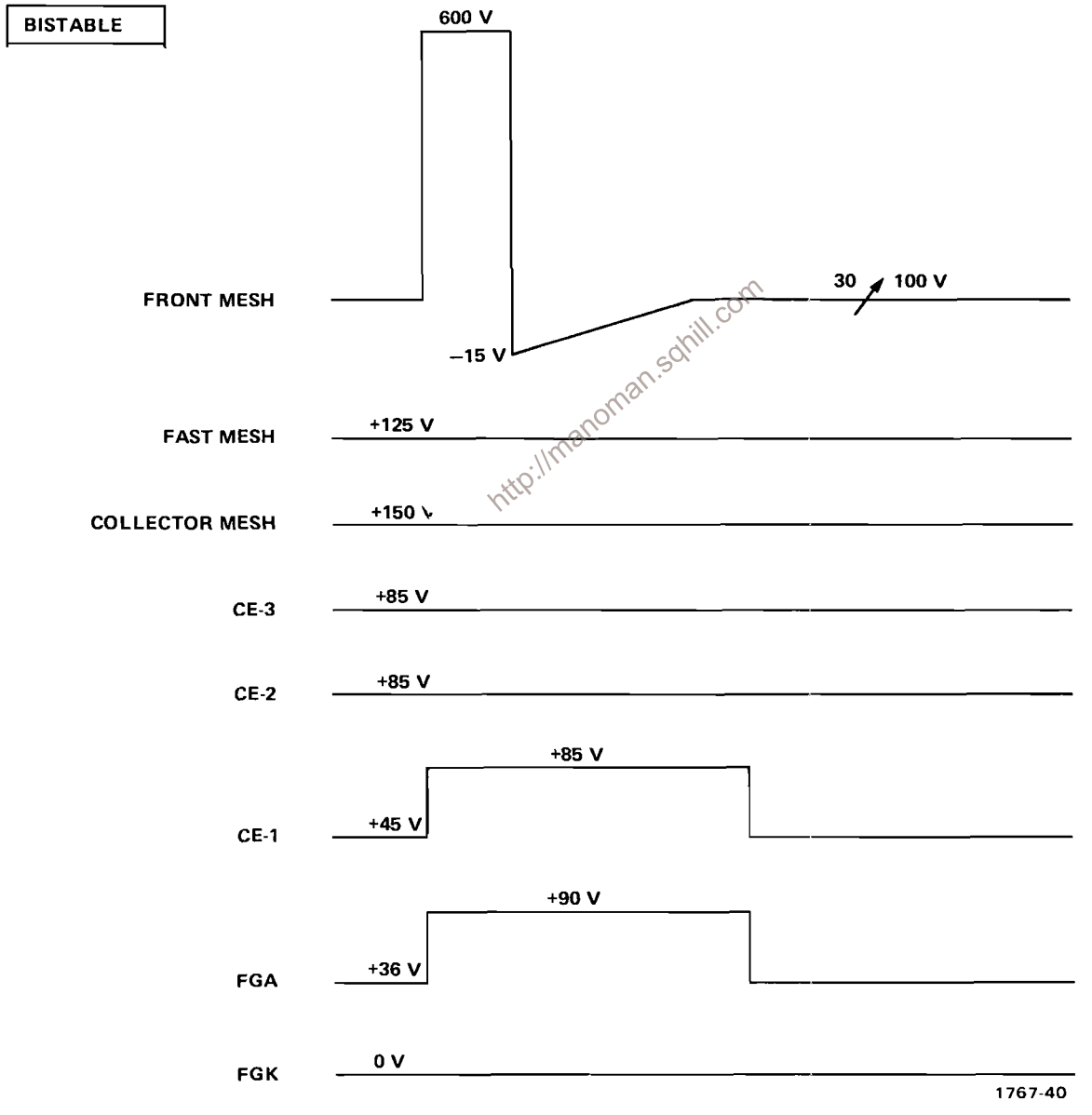

http://manoman.sqhill.com

Figure 3-40. BISTABLE mode Storage waveforms.

to pin 10 of U1555B, which presets the W output HI. When the $\overline{Y}$ output returns HI, after 400 milliseconds, it causes U1615B to change state. This, in turn, sets the Z output (pin 5 of U1615B) HI for 100 milliseconds.

During the time X and Y are HI, the sweep is locked out through U1495A and CR1500. During the time Z is HI, the sweep is locked out through CR1497.

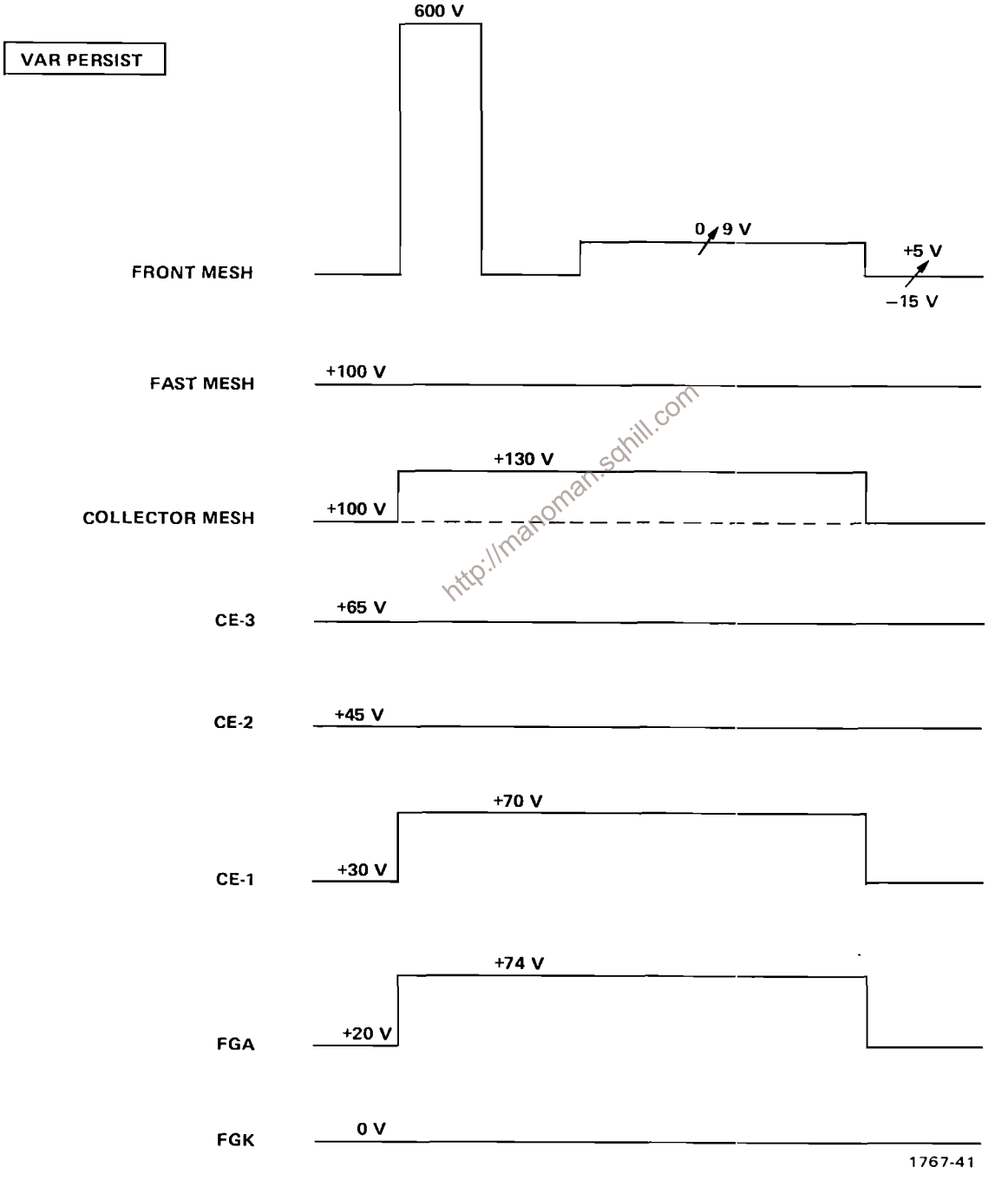

http://manoman.sqhill.com

Figure 3-41. VAR PERSIST mode Storage waveforms.

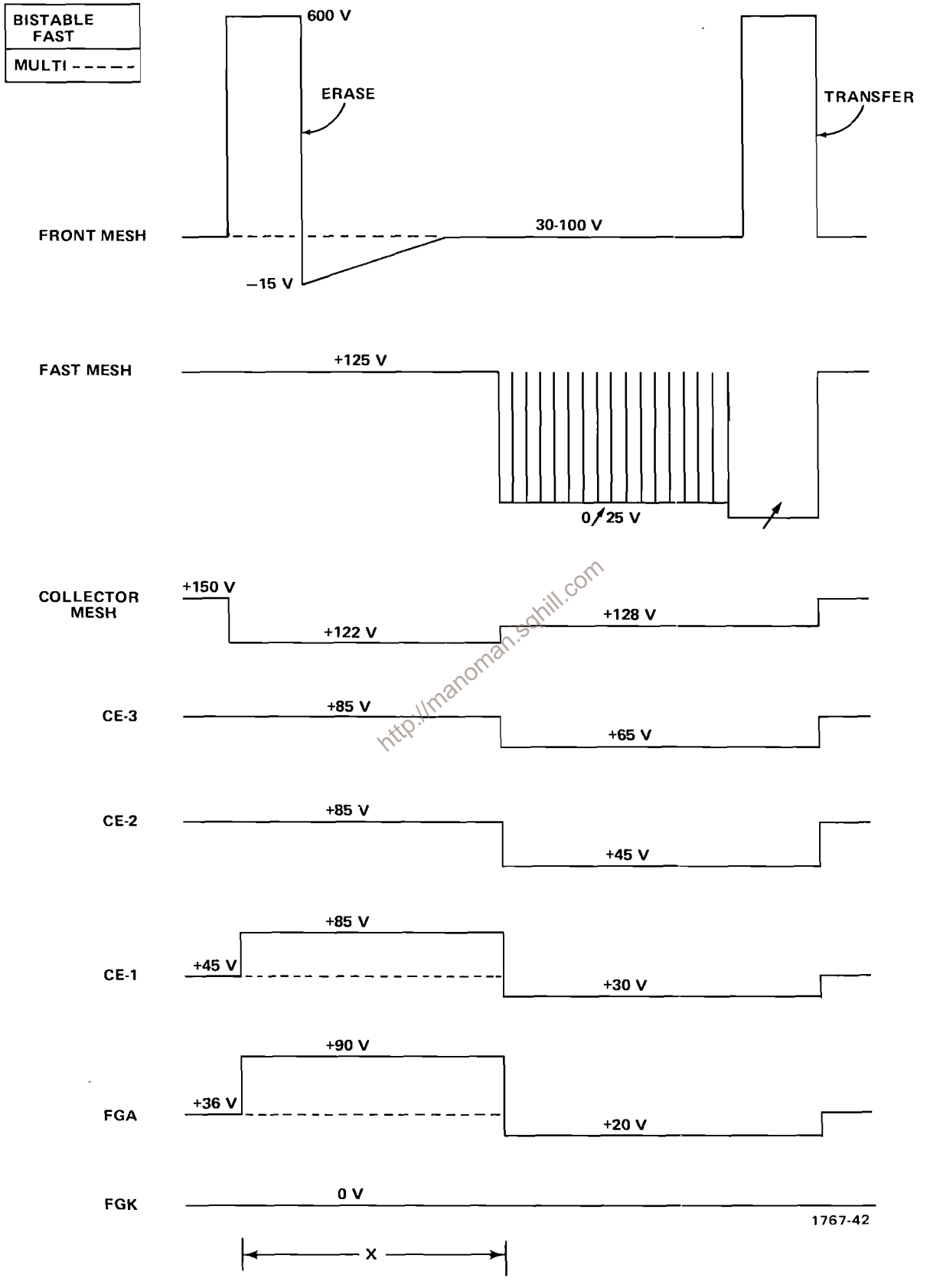

http://manoman.sghill.com

Figure 3-42. FAST BISTABLE mode Storage waveforms.

At the end of Z the sweep is free to run since it is no longer locked out. When a sweep occurs, a holdoff gate from the time-base unit indicates the end of sweep. This signal, through Q1553 and U1497B, causes U1545B to change state and output a 100-millisecond transfer pulse, and locks out the sweep through D1498. At the end of transfer, when W goes LO, the sweep is locked out through CR1496.

When $\overline{\text{TSFR}}$ returns HI after the 100-millisecond transfer pulse, it saturates Q1569 to start the timing sequence of X, Y, and Z over again. In single sweep this is prevented by the conduction of Q1564. In single sweep the sequence can only be started again by an erase pulse.

Q1587, Q1576, and Q1585 form the automatic single-sweep reset circuit. In the FAST mode, when $\overline{Z}$ returns HI after an erase pulse, it momentarily turns on Q1576, which turns off Q1587. This same signal turns on Q1585 to reset the time base. Pressing the time-base single-sweep reset button grounds the emitter of Q1587, causing it to saturate and restart the X, Y, and Z timing sequence. Since the X, Y, and Z timing sequence locks out the time base, the $\overline{Z}$ (when it goes HI) is again used to reset the time base by saturating Q1585.

When not in the FAST mode, a HI ($\overline{\text{FAST}}$) signal through R1591 to the base of Q1595 causes the clear inputs to U1605B and U1555B to be held LO, which prevents Y and W from going HI. This same HI signal keeps Q1576 saturated. This prevents Q1587 from turning on and tripping the one-shot when the time base single-sweep reset button is pressed.

http://manuals.sqhill.com

Q1621 (a programmable-unijunction transistor—P.U.T.) is the clock that provides the pump pulses, the save intensity pulses, and the persistence pulses. Its gate is tied to the gate of Q1631 so the two are synchronized. Q1631 provides the 10-kHz ramp to the Front Mesh.

From the time W goes HI until sweep starts, each time a clock pulse is applied to the input of U1615A, it fires a two microsecond pump pulse into the Fast Mesh operational amplifier through Q1775 (see Figures 3-42 and 3-43). The 100-Hertz clock gives the time between pulses while the R-C network (R1614 and C1614) determines the pulse width.

OPERATIONAL AMPLIFIERS

The voltage levels on the Front Mesh are controlled by an operational amplifier composed of Q1701, Q1704, Q1708, and Q1711. Input to the operational amplifier is the base of Q1701. Feedback is provided through R1713 and C1713. The bistable level is determined by Q1686 and R1689; the variable persistence prep level by Q1667, Q1673, and R1677; and the variable persistence op level by Q1661 and R1658. Q1644 and R1646 set the Fast variable persistence waiting level (see Figure 3-43). Q1652 locks out the 10 kHz ramp and the Storage Level control in the Bistable mode and when the Prep input is HI.

When an ERASE or TSFR pulse is applied to its emitter, Q1718 saturates, turning on Q1723, which cuts off Q1728 and Q1734. This allows the +600 volts at the collector of Q1734 to be routed, through Q1743 and Q1739, to the Front Mesh as a 100-millisecond erase or transfer pulse.

At the same time the 600-volt erase pulse is applied to the Front Mesh in the Bistable mode, the HI, ERASE logic level at its emitter causes Q1697 to saturate, discharging C1695. At the instant the erase pulse is over, Q1697 turns off and C1695 begins to charge from ground toward −30V. At the −15V level, the base and collector of Q1692 approach unity, preventing any further charging of C1695. This ramp causes the output of the operational amplifier to ramp from −15V to the Bistable op level.

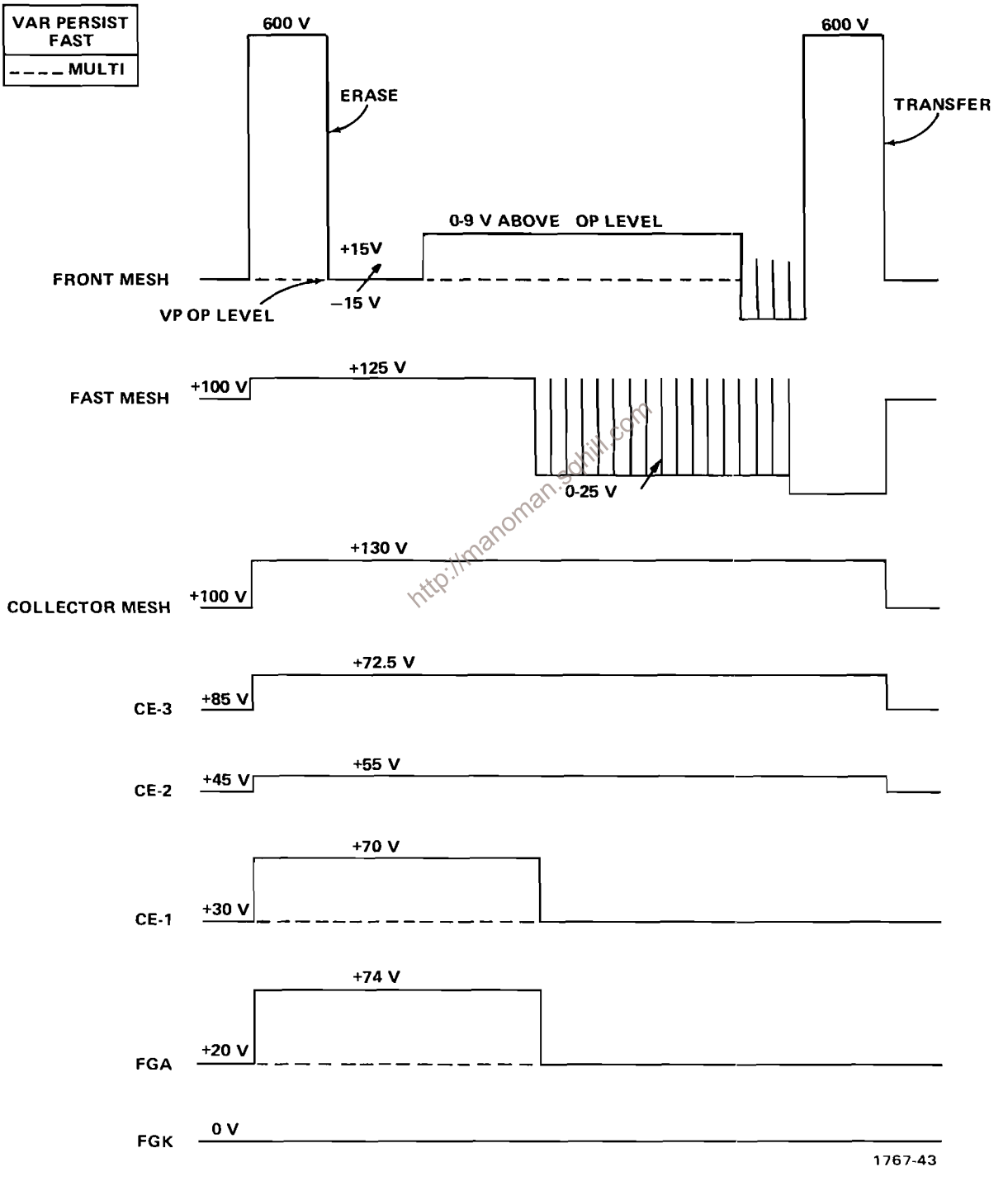

Figure 3-43. FAST VAR PERSIST mode Storage waveforms.

The operational amplifier, consisting of Q1788, Q1790, Q1795, and Q1798, connected to the Fast Mesh is essentially the same as that connected to the Front Mesh except for a smaller feedback resistor (R1792) and no feedback capacitor.

The 100 and 125 volt levels on the Fast Mesh are set by the current through CR1771. When the W logic pulse goes HI, the Fast Mesh voltage level drops and pump pulses are applied through Q1775. When the $\overline{\text{SWP +TSFR}}$ logic pulse goes LO, it turns off Q1761, which lowers the Fast Mesh level further, and, by clearing U1615A, stops the pump pulses.

Voltage levels on the Collector Mesh, CE3, CE2, CE1, and FGA are set in similar manner to those on the Front and Fast Meshes by logic pulses applied to the inputs of their respective operational amplifiers.

http://manoman.sqhill.com

MAINTENANCE

This section of the manual contains maintenance information for use in preventive maintenance, corrective maintenance, or troubleshooting of the 7633/R7633.

PRELIMINARY INFORMATION

PANEL REMOVAL

Panels and covers on both the 7633 and the R7633 should be removed in accordance with the procedures outlined below.

WARNING

Dangerous potentials exist at several points throughout this instrument. When the instrument is operated with the covers removed, do not touch exposed connections or components. Some transistors have voltages present on their cases. Disconnect power before cleaning the instrument or replacing parts.

http://manoman.sqhill.com

CABINET MODEL

The side panels of the 7633 are held in place by spring-action of the panels themselves. To remove the panels, push the panel toward the top of the instrument until the bottom of the panel is clear of the clot along the bottom rail of the instrument. Then, pull the panel out at the bottom and lift away from the instrument. The bottom panel is held in place with eight screws. The panels protect this instrument from dust in the interior, and also provide protection to personnel from the operating potentials present. They also reduce the emi radiation from this instrument or emi interference to the display due to other equipment.

RACK MODEL

The top cover is held in place with six screws. To remove the cover, the screws need only be loosened slightly to slide the cover out of the slots.

A panel on the left side of the instrument, held in place with six screws, allows access to the vertical amplifier circuit board.

A cover on the rear of the instrument, held in place with four screws, allows access to the power supply regulating transistors. It also allows access to three of the five screws holding the regulating circuit board assembly in the instrument.

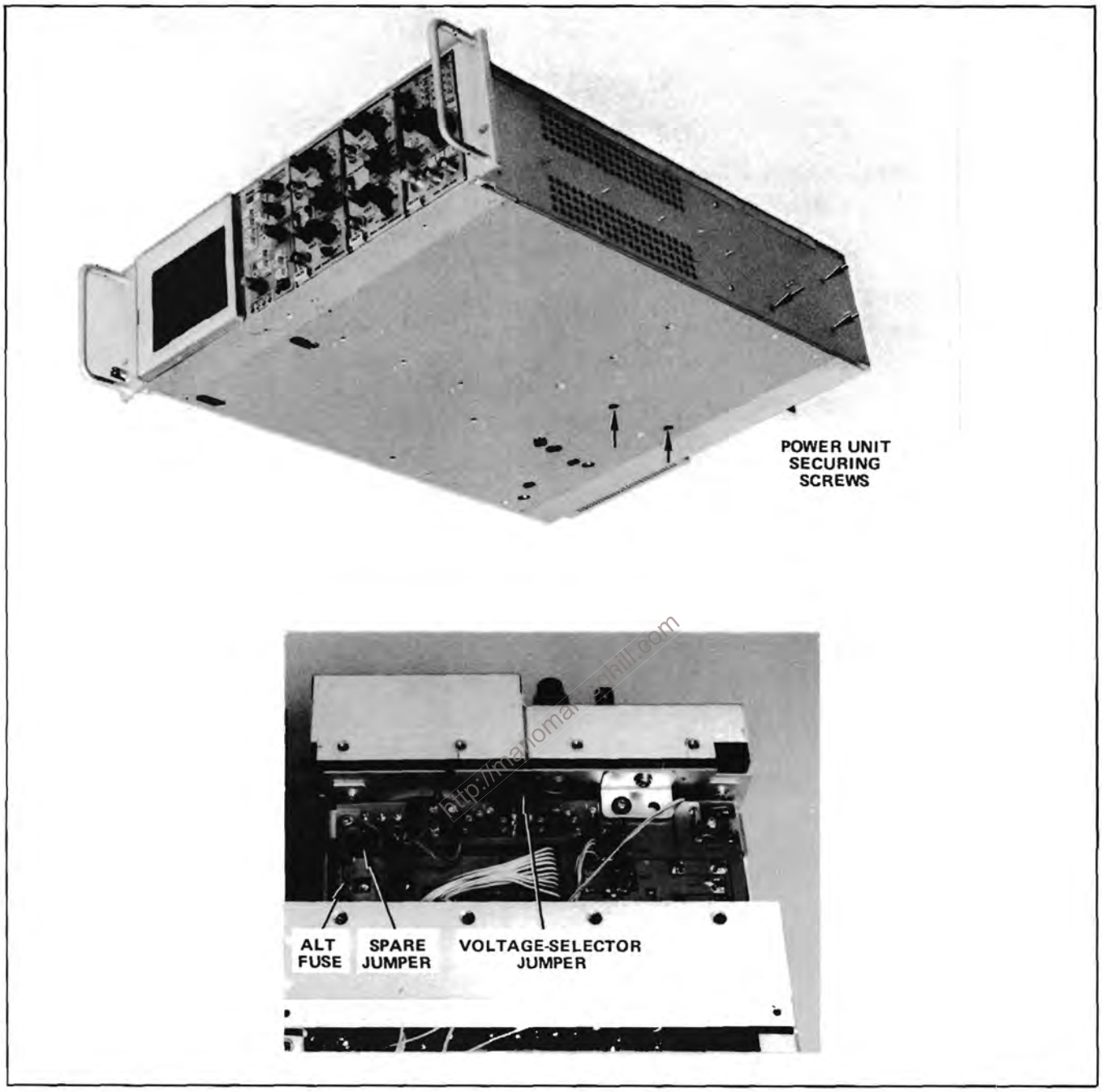

Figure 4-1. Power Unit removal.

POWER-UNIT REMOVAL

The power unit can be slid out of the back of the instrument to gain access to the Logic and Rectifier circuit boards and for power-unit maintenance. The power unit can be left connected to the rest of the instrument so that it can be operated in this position for troubleshooting. To remove the power unit, use the following procedure:

1. Remove the side panels (top panel for R7633.

2. Remove the six screws which secure the power unit to the sides of the instrument, (see Fig. 4-1 for locations of screws on R7633).

3. Slide the power unit out of the rear of the instrument until it can be set down on the work surface (guide the interconnecting cables so they do not catch on other parts of the instrument).

PREVENTIVE MAINTENANCE

Preventive maintenance consists of cleaning, visual inspection, lubrication, etc. Preventive maintenance performed on a regular basis may prevent instrument breakdown and will improve the reliability of this instrument. The severity of the environment to which the 7633/R7633 is subjected determines the frequency of maintenance is preceding recalibration of the instrument.

CLEANING

The 7633/R7633 should be cleaned as often as operating conditions require. Accumulation of dirt in the instrument can cause overheating and component breakdown. Dirt on components acts as an insulating blanket and prevents efficient heat dissipation. It also provides an electrical conduction path which may result in instrument failure. The side panels provide protection against dust in the interior of the instrument. Operation without the panels in place necessitates more frequent cleaning.

http://manoman.sqhill.com

CAUTION

Avoid the use of chemical cleaning agents which might damage the plastics used in this instrument. Avoid chemicals which contain benzene, toluene, xylene, acetone, or similar solvents.

EXTERIOR

Loose dust accumulated on the outside of the 7633/R7633 can be removed with a soft cloth or small brush. The brush is particularly useful for dislodging dirt on and around the front-panel controls. Dirt which remains can be removed with a soft cloth dampened in a mild detergent and water solution. Abrasive cleaners should not be used.

AIR FILTER (R7633 only)

The air filter should be visually checked every few weeks and cleaned or replaced if dirty. More frequent inspections are required under severe operating conditions. If the filter is to be replaced, order new air filters from your local Tektronix Field Office or representative; order by Tektronix Part No. 378-0041-01. The following procedure is suggested for cleaning the filter.

1. Remove the filter by pulling it out of the retaining frame on the rear panel. Be careful not to drop any of the accumulated dirt into the instrument.

2. Flush the loose dirt from the filter with a stream of hot water.

3. Place the filter in a solution of mild detergent and hot water and let it soak for several minutes.

4. Squeeze the filter to wash out any dirt which remains.

5. Rinse the filter in clean water and allow it to dry.

6. Coat the dry filter with an air-filter adhesive (available from air conditioner suppliers or order Tektronix Part No. 006-0580-00).

7. Let the adhesive dry thoroughly.

8. Re-install the filter in the retaining frame.

CRT

Clean the plastic light filter, faceplate protector, and the crt face with a soft, lint-free cloth dampened with denatured alcohol.

The optional crt mesh filter can be cleaned in the following manner:

1. Hold the mesh filter in a vertical position and brush lightly with a soft No. 7 water-color brush to remove light coatings of dust or lint.

2. Greasy residues or dried-on dirt can be removed with a solution of warm water and a neutral-pH liquid detergent. Use the brush to lightly scrub the filter.

3. Rinse the filter thoroughly in clean water and allow to air dry.

4. If any lint or dirt remains, use clean low-pressure air to remove it. Do not use tweezers or other hard cleaning tools on the filter, as the special finish may be damaged.

5. When not in use, store the mesh filter in a lint-free, dust-proof container such as a plastic bag.

http://manuals.sphill.com

INTERIOR

Dust in the interior of this instrument should be removed occasionally due to its electrical conductivity under high-humidity conditions. The best way to clean the interior is to blow off the accumulated dust with dry, low-pressure air. Remove any dirt which remains with a soft brush or a cloth dampened with a mild detergent and water solution. A cotton-tipped applicator is useful for cleaning in narrow spaces or for cleaning ceramic terminal strips and circuit boards.

The high-voltage circuits, particularly parts located in the high-voltage compartment and the area surrounding the post-deflection anode lead, should receive special attention. Excessive dirt in these areas may cause high-voltage arcing and result in improper instrument operation.

LUBRICATION

The reliability of potentiometers, switches, and other moving parts can be maintained if they are kept properly lubricated. However, over-lubrication is as detrimental as too little lubrication. A lubrication kit containing necessary lubricants and instructions is available from Tektronix, Inc. Order Part No. 003-0342-01.

VISUAL INSPECTION

The 7633/R7633 should be inspected occasionally for such defects as broken connections, improperly seated semiconductors, damaged or improperly installed circuit boards, and heat-damaged parts. The corrective procedure for most visible defects is obvious; however, particular care must be taken if heat-damaged components are found. Overheating usually indicates other trouble in the instrument; therefore, it is important that the cause of overheating be corrected to prevent recurrence of the damage.

SEMICONDUCTOR CHECKS

Periodic checks of the semiconductors in the 7633/R7633 are not recommended. The best check of semiconductor performance is actual operation in the instrument. More details on checking semiconductor operation are given under troubleshooting.

RECALIBRATION

To assure accurate measurements, check the calibration of this instrument after each 1000 hours of operation or every six months if used infrequently. In addition, replacement of components may necessitate recalibration of the affected circuits. The calibration procedure can also be helpful in localizing certain troubles in the instrument. In some cases, minor troubles may be revealed and/or corrected by recalibration.

http://manomanuals.mhill.com

TROUBLESHOOTING

The following information is provided to facilitate troubleshooting of the 7633/R7633. Information contained in other sections of this manual should be used along with the following information to aid in locating the defective component. An understanding of the circuit operation is very helpful in locating troubles, particularly where integrated circuits are used. See the Theory of Operation section for complete information.

TROUBLESHOOTING AIDS

DIAGRAMS

Complete circuit diagrams are given on foldout pages in the Diagrams section. The component number and electrical value of each component in this instrument are shown on these diagrams. Important voltages and waveforms are also shown on the diagrams. The portions of the circuit mounted on circuit boards are enclosed with blue lines.

CIRCUIT BOARDS

Fig. 4-2 shows the location of the circuit boards within the 7633; Fig. 4-3 shows the location of circuit boards in the R7633. These circuit boards are shown in Figs. 8-2 through 8-16 in the Diagrams section. Each electrical component on the boards is identified by its circuit number. A grid location guide is provided to aid in locating circuit components. The circuit boards are also outlined on the diagrams with a blue line to show which portions of the circuit are located on a circuit board.

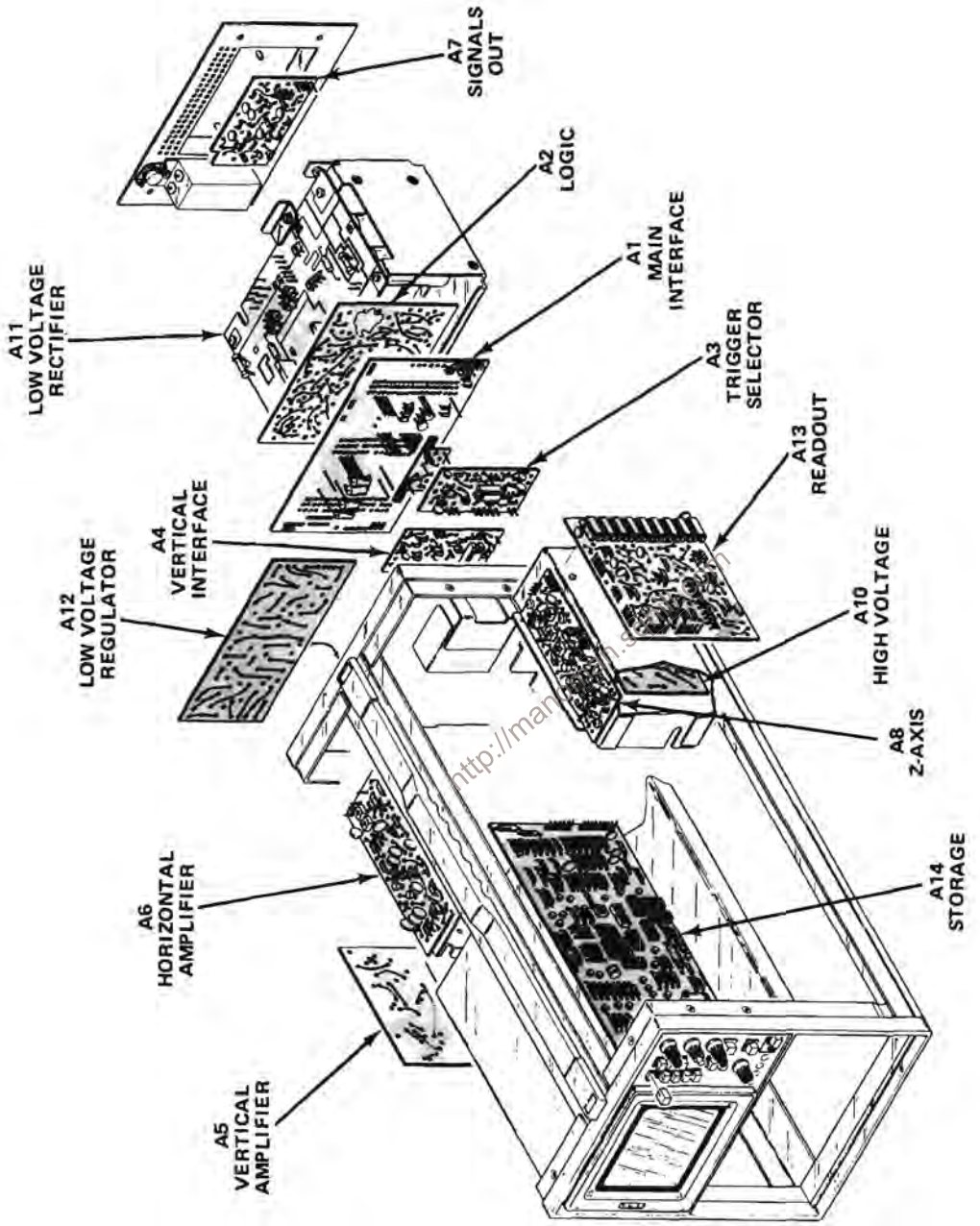

Figure 4-2. Location of circuit boards in the 7633.

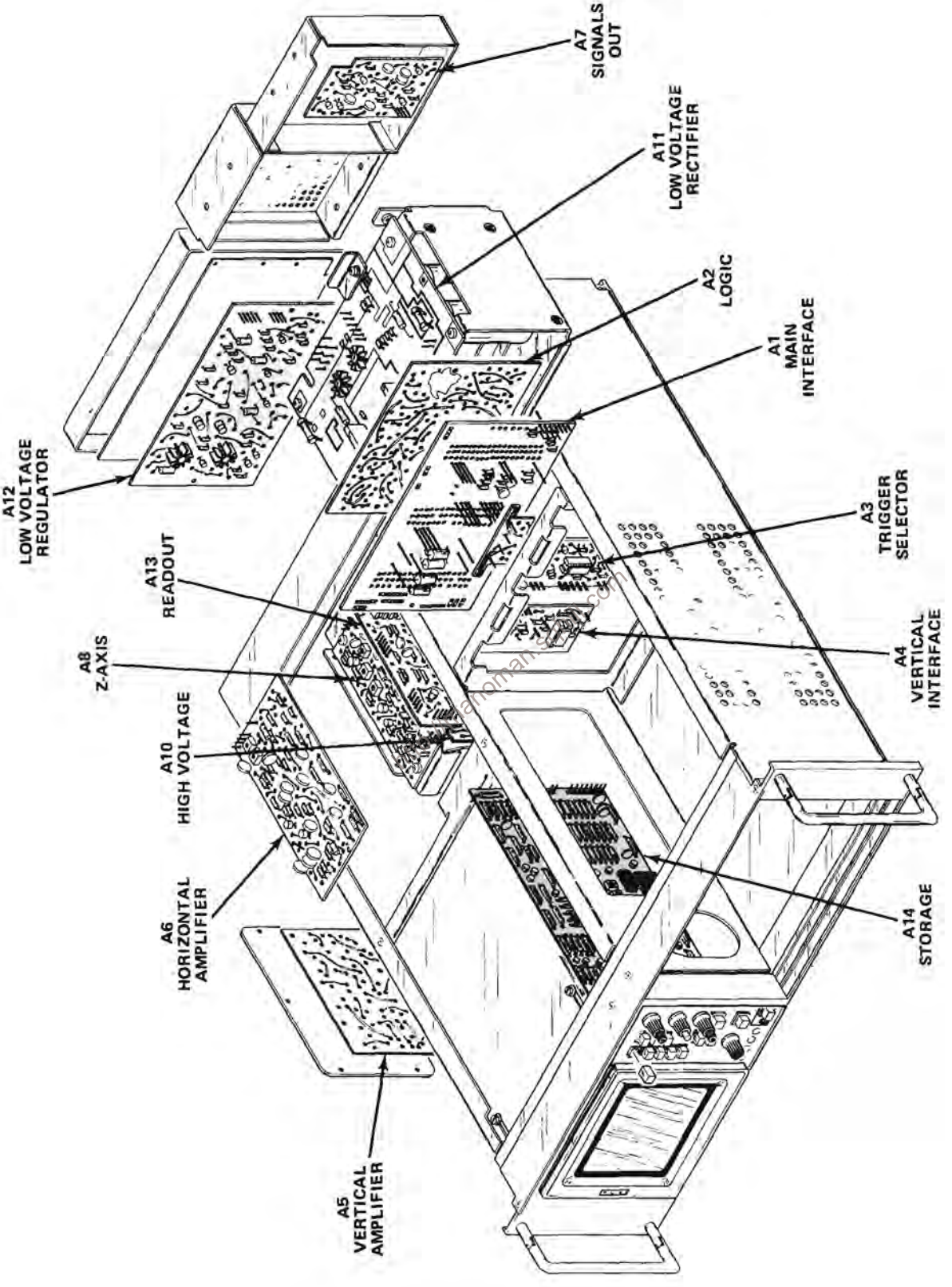

Figure 4-3. Location of circuit boards in the R7633.

MULTI-PIN CONNECTOR COLOR-CODE

The multi-pin connectors used for interconnection between circuit boards are color-coded to aid in circuit tracing. The color of the connector body matches the resistor color-code for the last digit of the circuit number; e.g., P601 is brown, P603 is orange, etc.

WIRING COLOR-CODE

All insulated wire and cable used in the 7633/R7633 is color-coded to facilitate circuit tracing.

TROUBLESHOOTING EQUIPMENT

The following equipment is useful for troubleshooting the 7633/R7633.

1. Transistor Tester

   Description: Tektronix Type 576 Transistor-Curve Tracer or equivalent.

   Purpose: To test the semiconductors used in this instrument.

2. Multimeters

   Description: Digital voltmeter, 10 megohm input impedance and 0 to 500 volts range; ohmmeter, 0 to 2 megohms. Accuracy, within 1%. Test probes must be insulated to prevent accidental shorting.

   Purpose: To check voltages and for general troubleshooting in this instrument.

NOTE

A 20,000 ohms/volt vom can be used to check the voltages in this instrument if allowances are made for the circuit loading of the vom at high-impedance points.

http://manoman.sqhi.com

3. Test Oscilloscope

   Description: Frequency response, dc to 50 megahertz; deflection factor, 50 volts/division. A 10X probe should be used to reduce circuit loading.

   Purpose: To check operating waveforms in this instrument.

TROUBLESHOOTING TECHNIQUES

This troubleshooting procedure is arranged in an order which checks the simple trouble possibilities before proceeding with extensive troubleshooting. The first few checks assure proper connection, operation, and calibration. If the trouble is not located by these checks, the remaining steps aid in locating the defective component. When the defective component is located, it should be replaced following the replacement procedures given under corrective maintenance.

1. Check Control Settings. Incorrect control settings can indicate a trouble that does not exist. If there is any question about the correct function or operation of any control, see the Operating Instructions section.

2. Check Associated Equipment. Before proceeding with troubleshooting of the 7633/R7633, check that the equipment used with this instrument is operating correctly. Check that the signal is properly connected and that the interconnecting cables are not defective. Also, check the power source. The associated plug-in units can be checked for proper operation by substituting other units which are known to be operating properly (preferably of the same types). If the trouble persists after substitution, the 7633/R7633 is probably at fault.

3. Visual Check. Visually check the portion of the instrument in which the trouble is located. Many troubles can be located by visual indications such as unsoldered connections, broken wires, damaged circuit boards, damaged components, etc.

4. Check Instrument Calibration. Check the calibration of this instrument, or the affected circuit if the trouble appears in one circuit. The apparent trouble may only be a result of misadjustment, or may be corrected by calibration. Complete calibration instructions are given in the Calibration section.

5. Isolate Trouble To A Circuit. To isolate trouble to a particular circuit, note the trouble symptom. The symptom often identifies the circuit in which the trouble is located. For example, poor focus indicates that the crt circuit (includes high-voltage supplies) is probably at fault. When trouble symptoms appear in more than one circuit, check affected circuits by taking voltage and waveform readings. Typical voltages and waveforms are given on the schematics in the Diagrams section.

http://manuals.sqhill.com

Incorrect operation of all circuits often indicates trouble in the power supply. Check first for correct voltage of the individual supplies. A defective component elsewhere in the instrument can appear as a power-supply trouble and may also affect the operation of other circuits. Table 4-1 lists the tolerances of the power supplies in this instrument. These voltages are measured between the power-supply test points and ground. If a power-supply voltage is within the listed tolerance, the supply can be assumed to be working correctly. If outside the tolerance, the supply may be misadjusted or operating incorrectly. Use the procedure given in the Calibration section to adjust the power supplies.

TABLE 4-1

Power Supply Tolerance and Ripple

Power Supply	Test Point	Output Voltage Tolerance	Maximum ripple (peak-to-peak)
–50 Volt	TP-50 (back of Main Interface board) on P1170-Pin 1	±0.1 volt	5 mV
–15 Volt	P1170-Pin 8	±0.3 volt	2 mV
+5 Volt	P1170-Pin 6	±0.15 volt	2 mV
+15 Volt	P1170-Pin 5	±0.3 volt	2 mV
+50 Volt	P1170-Pin 4	±0.6 volt	5 mV
+130 Volt	P1170-Pin 3	±5.2 volts	300 mV

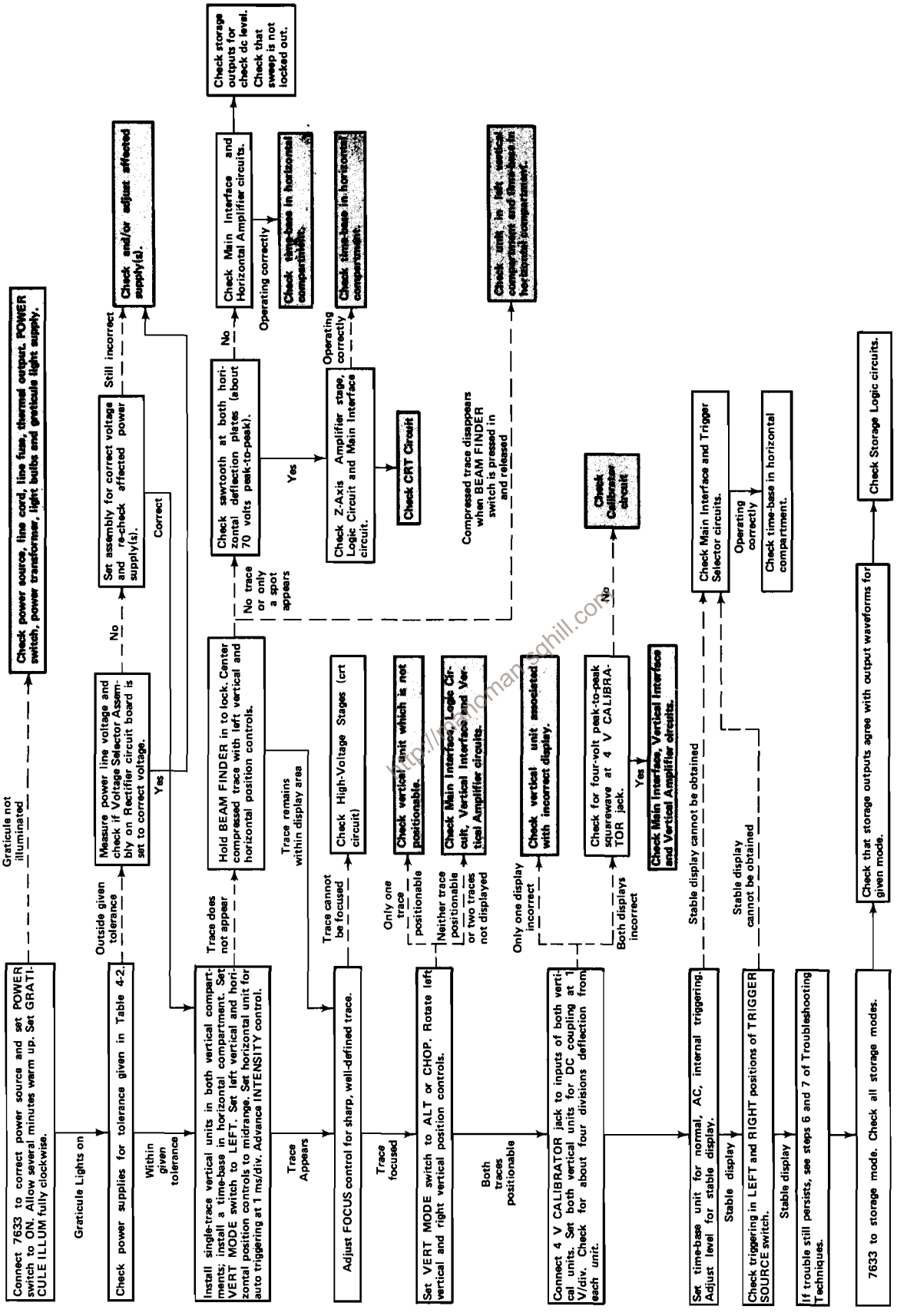

Figure 4-4. Circuit isolation troubleshooting chart.

Fig. 4-4 provides a guide for locating a defective circuit. This chart does not include checks for all possible defects; use steps 6 and 7 in such cases. Start from the top of the chart and perform the given checks on the left side of the page until a step is found which does not produce the indicated results. Further checks and/or the circuit in which the trouble is probably located are listed to the right of this step.

If incorrect operation of the power supplies is suspected, connect the 7633/R7633 to a variable autotransformer. Then, check for correct regulation with a dc voltmeter (0.1% accuracy) and correct ripple with a test oscilloscope while varying the autotransformer throughout the regulating range of this instrument.

After the defective circuit has been located, proceed with steps 6 and 7 to locate the defective component(s).

6. Check Voltages and Waveforms. Often the defective component can be located by checking for the correct voltage or waveform in the circuit. Typical voltages and waveforms are given on the diagrams.

NOTE

Voltages and waveforms given on the diagrams are not absolute and may vary slightly between instruments. To obtain operating conditions similar to those used to take these readings, see the first diagram page.

http://mamoman.sqhill.com

7. Check Individual Components. The following procedures describe methods of checking individual components in the 7633/R7633. Components which are soldered in place are best checked by first disconnecting one end. This isolates the measurement from the effects of surrounding circuitry.

A. SEMICONDUCTORS.

CAUTION

Power switch must be turned off before removing or replacing semiconductors.

A good check of transistor operation is actual performance under operating conditions. A transistor can most effectively be checked by substituting a new component for it (or one which has been checked previously). However, be sure that circuit conditions are not such that a replacement transistor might also be damaged. If substitute transistors are not available, use a dynamic tester. Static-type testers are not recommended, since they do not check operation under simulated operating conditions.

Integrated circuits can be checked with a voltmeter, test oscilloscope, or by direct substitution. A good understanding of the circuit operation is essential to troubleshooting circuits using integrated circuits. In addition, operating waveforms, logic levels, and other operating information for the integrated circuits are given in

the Theory of Operation section. Use care when checking voltages and waveforms around the integrated circuits so adjacent leads are not shorted together. A convenient means of clipping a test probe to the 14- and 16-pin integrated circuits is with an integrated-circuit test clip. This device also doubles as an integrated-circuit extraction tool.

B. DIODES.

A diode can be checked for an open or for a short circuit by measuring the resistance between terminals with an ohmmeter set to the R X 1k scale. The diode resistance should be very high in one direction and very low when the meter leads are reversed. Do not check tunnel diodes or back diodes with an ohmmeter.

CAUTION

Do not use an ohmmeter scale that has a high internal current. High currents may damage the diodes under test.

C. RESISTORS.

Check the resistors with the ohmmeter. See the Electrical Parts List for the tolerance of the resistors used in this instrument. Resistors normally do not need to be replaced unless the measured value varies widely from the specified value.

http://manualman.sqhill.com

D. INDUCTORS.

Check for open inductors by checking continuity with an ohmmeter. Shorted or partially shorted inductors can usually be found by checking the waveform response when high-frequency signals are passed through the circuit. Partial shorting often reduces high-frequency response (roll-off).

E. CAPACITORS.

A leaky or shorted capacitor can best be detected by checking resistance with an ohmmeter on the highest scale. Do not exceed the voltage rating of the capacitor. The resistance reading should be high after initial charge of the capacitor. An open capacitor can best be detected with a capacitance meter or by checking if the capacitor passes ac signals.

8. Repair and Readjust the Circuit. If any defective parts are located, follow the replacement procedures given in this section. Be sure to check the performance of any circuit that has been repaired or that has had any electrical components replaced.

CORRECTIVE MAINTENANCE

Corrective maintenance consists of component replacement and instrument repair. Special techniques required to replace components in this instrument are given here.

OBTAINING REPLACEMENT PARTS

STANDARD PARTS

All electrical and mechanical part replacements for the 7633/R7633 can be obtained through your local Tektronix Field Office or representative. However, many of the standard electronic components can be obtained locally in less time than is required to order them from Tektronix, Inc. Before purchasing or ordering replacement parts, check the parts list for value, tolerance, rating, and description.

NOTE

When selecting replacement parts, it is important to remember that the physical size and shape of a component may affect its performance in the instrument, particularly at high frequencies. All replacement parts should be direct replacements unless it is known that a different component will not adversely affect instrument performance.

http://mecomman.sqhill.com

SPECIAL PARTS

In addition to the standard electronic components, some special components are used in the 7633/R7633. These components are manufactured or selected by Tektronix, Inc. to meet specific performance requirements, or are manufactured for Tektronix, Inc. in accordance with our specifications. Most of the mechanical parts used in this instrument have been manufactured by Tektronix, Inc. Order all special parts directly from your local Tektronix Field Office or representative.

ORDERING PARTS

When ordering replacement parts from Tektronix, Inc., include the following information:

1. Instrument type.
2. Instrument serial number.
3. A description of the part (if electrical, include circuit number).
4. Tektronix part number.

SOLDERING TECHNIQUES

The reliability and accuracy of this instrument can be maintained only if proper soldering techniques are used when repairing or replacing parts.

WARNING

Disconnect the instrument from the power source before soldering.

General soldering techniques which apply to maintenance of any precision electronic equipment should be used when working on this instrument. Use only 60/40 rosin-core electronic-grade solder. The choice of soldering iron is determined by the repair to be made. When soldering on circuit boards, use a 35- to 40-watt pencil-type soldering iron with a 1/8-inch wide, wedge-shaped tip. Keep the tip properly tinned for best heat transfer to the solder joint. A higher wattage soldering iron may separate the wiring from the base material. Avoid excessive heat; apply only enough heat to remove the component or to make a good solder joint. Also, apply only enough solder to make a firm solder joint; do not apply too much solder.

For metal terminals (e.g., switch terminals, potentiometers, etc.) a higher wattage-rating soldering iron may be required. Match the soldering iron to the work being done. For example, if the component is connected to the chassis or other large heat-radiating surface, it will require a 75-watt or larger soldering iron. The pencil-type soldering iron used on the circuit board can be used for soldering to switch terminals, potentiometers, or metal terminals mounted in plastic holders.

After soldering is completed, clean the area around the solder connection with a flux-remover solvent. Be careful not to remove any information printed in the area.

COMPONENT REPLACEMENT

The exploded-view drawings associated with the Mechanical Parts List (located at rear of manual) may be helpful in the removal or disassembly of individual components or sub-assemblies.

http://manuman.stpill.com

WARNING

Disconnect the instrument from the power source before replacing components.

CIRCUIT BOARD REPLACEMENT

If a circuit board is damaged beyond repair, the entire assembly including all soldered-on components, can be replaced. Part numbers are given in the Mechanical Parts List.

NOTE

Even though unwired boards are available without components, use of the completely wired replacement board is recommended due to the large number of components mounted on most of the boards.

Most of the circuit boards in this instrument are mounted on the chassis; pin connectors are used for interconnection with other circuits. Use the following procedure to remove the chassis-mounted circuit boards (removal instructions for the exceptions will be given later).

A. CHASSIS-MOUNTED BOARDS.

1. Disconnect any pin connectors on the board or connected to other portions of the instrument. Note the order of these connectors so they can be correctly replaced.

2. Remove the securing screws.

3. Remove the board.

4. To replace the board, reverse the order of removal. Match the arrows on the multi-pin connectors to the arrows on the board. Correct location of the pin connectors is shown in the circuit board illustrations in the Diagrams section.

B. TRIGGER SELECTOR AND VERTICAL INTERFACE CIRCUIT BOARD REPLACEMENT.

The Trigger Selector and Vertical Interface circuit boards plug onto the front of the Main Interface circuit board. Use the following procedure to replace either board.

1. Remove the securing screws.

2. Pull out on the edges of the board until the board clears the interconnecting terminals. Hold the board parallel to the Main Interface board until the board is free, so as not to bend the interconnecting terminals.

3. To replace the circuit board, position it so the interconnecting pins and sockets mate properly.

4. Gently press the circuit board against the mounting surface. Be sure that all the interconnecting pins and sockets mate properly.

5. Replace the securing screws.

http://manuman.sqhill.com

C. LOGIC CIRCUIT BOARD REPLACEMENT.

1. Slide out the power unit as described previously.

2. Disengage the plastic snaps which secure the sides of the board.

3. Pull out on the edges of the board until the board clears the interconnecting terminals. Hold the board parallel to the Main Interface board until the board is free, so as not to bend the interconnecting terminals.

4. To replace the Logic board, position it so the guide holes in the board mate with the guide posts. Check that all the interconnecting pins and sockets mate properly.

5. Gently press the board against the Main Interface board until the plastic snaps secure the board.

D. MAIN INTERFACE CIRCUIT BOARD REPLACEMENT.

1. Slide out the power unit as described previously.

2. Remove all of the plug-on circuit boards from the Main Interface board (remove plug-in units to gain access to plug-on boards on front of Main Interface board).

3. Disconnect the multi-pin connectors from the rear of the Main Interface board. Note the order of these connectors so they can be correctly replaced.

4. Remove the three screws from inside each plug-in compartment which hold the plug-in interface connectors to the chassis (total of nine screws). Also remove the hexagonal posts which secure the ground straps to the Main Interface board.

5. Remove the Main Interface board assembly through the rear of the instrument.

6. To replace the Main Interface board, reverse the order of removal. Match the arrows on the multi-pin connectors to the arrows on the board. Correct location of the pin connectors is shown in the circuit board illustration in the Diagrams section.

E. LOW-VOLTAGE REGULATOR CIRCUIT BOARD REPLACEMENT.

1. Remove the four screws which secure the protective cover to the rear of the instrument. Remove the protective cover.

2. Disconnect the pin connectors.

3. Remove the four screws which secure the Regulator and Fan-Motor subassembly cover to the rear of the instrument.

4. Remove the two screws which secure the Fan Motor, and remove the Fan Motor.

5. Remove the four screws which secure the plate to the heat radiator. Remove the plate.

6. Remove the power transistors from the back of the heat radiator. Note the location of each power transistor.

7. To replace the Regulator board, reverse the order of removal.

http://manuman.stbill.com

NOTE

After replacing the power transistors, check that the transistor cases are not shorted to the heat radiator before applying power.

F. RECTIFIER BOARD REPLACEMENT.

To replace the Rectifier board, proceed as follows:

1. Slide out the power unit as described previously.
2. Disconnect the pin connectors from the board.
3. Disconnect the wires soldered to the top of the board.
4. Unsolder all of the power transformer wires connected to the top of the board. Use a vacuum-type desoldering tool to remove the solder from the hole in the circuit board.
5. Remove the screws holding each corner of the board to the chassis.
6. To replace the Rectifier board, reverse the order of removal. Be sure that all of the transformer wires are properly placed before resoldering. Match the arrows on the multi-pin connectors to the arrows on the board. Correct location of the pin connectors and the wire color code is shown on the circuit board illustration in the Diagrams section.

G. PLUG-IN INTERFACE CONNECTORS.

The individual contacts of the plug-in interface connectors can be replaced. However, it is recommended that the entire Main Interface board be replaced if a large number of the contacts are damaged. An alternative solution is to refer the maintenance of the damaged Main Interface board to your local Tektronix Field Office or representative. Use the following procedure to replace an individual contact of the plug-in interface connector.

1. Remove the Main Interface circuit board from the instrument as described previously.
2. Snap the connector cover (white plastic) off the side of the plug-in interface connector which needs repair.
3. Unsolder and remove the damaged contact.
4. Install the replacement contact. Carefully form it to the required shape to fit against the connector body.
5. Snap the connector cover back onto the plug-in interface connector. Check that the contact which was replaced is aligned with the other contacts.
6. Replace the Main Interface board.

H. ACCESS TO THE FAN MOTOR FOR THE 7633.

1. Remove the four screws holding the Low-Voltage Regulator sub-assembly to the main chassis (see Fig. 4-5).
2. Pull the Low-Voltage regulator sub-assembly out through the rear of the instrument as far as cables will permit.
3. Remove the two screws holding the motor to the bracket; be careful not to lose the spacers between the motor and the bracket.
4. To replace the motor, reverse the order of removal.

I. ACCESS TO THE FAN MOTOR FOR THE R7633.

1. Remove the eight screws holding the Signals-Out rear panel to the chassis. Pull rear panel out as far as cables will permit (see Fig. 4-6).
2. Remove the four corner bolts securing the motor to the chassis.
3. To replace the motor, reverse the order of removal.

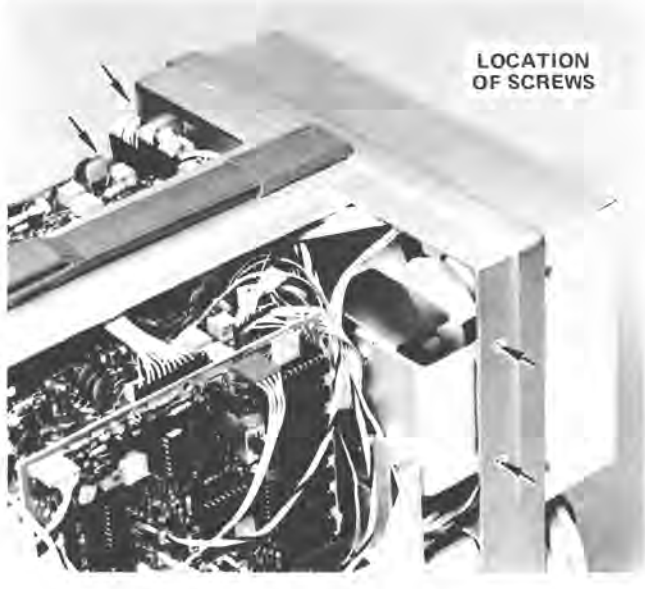

Figure 4-5. Location of screws holding Low-Voltage sub-chassis.

http://manuman.sqhill.com

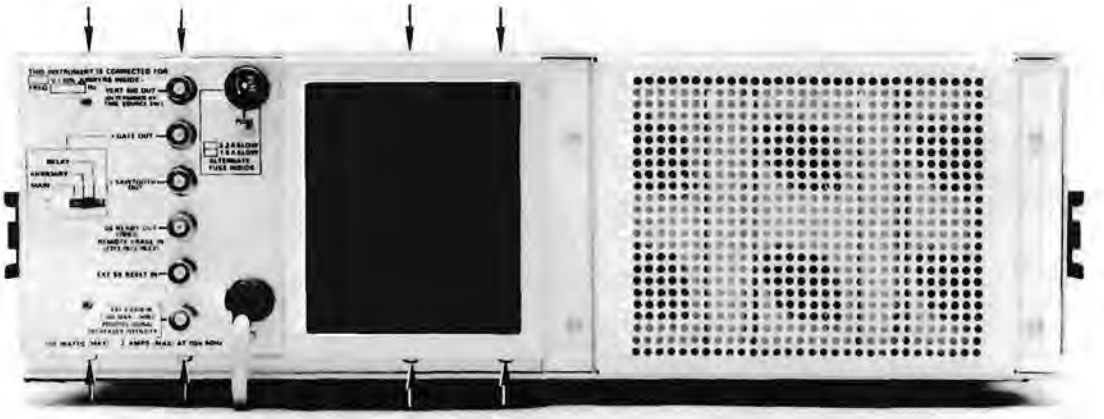

Figure 4-6. Location of screws holding Signals Out rear panel.

SEMICONDUCTOR REPLACEMENT

Semiconductors should not be replaced unless actually defective. If removed from their sockets during routine maintenance, return them to their original sockets. Unnecessary replacement of semi-conductors may affect the calibration of this instrument. When semi-conductors are replaced, check the operation of the part of the instrument which may be affected.

http://manoman.ohlm.com

An extracting tool should be used to remove the 14- and 16-pin integrated circuits to prevent damage to the pins. This tool is available from Tektronix, Inc. Order Tektronix Part No. 003-0619-00. If an extracting tool is not available when removing one of these integrated circuits, pull slowly and evenly on both ends of the device. Try to avoid having one end of the integrated circuit disengage from the socket before the other, as this may damage the pins.

CAUTION

POWER switch must be turned off before removing or replacing semiconductors.

Replacement semiconductors should be of the original type or a direct replacement. Fig 8-1 in the Diagrams Section shows the lead configuration of the semiconductors used in this instrument. Some plastic case transistors have lead configurations which do not agree with those shown here. If a replacement transistor is made by a different manufacturer than the original, check the manufacturer's basing diagram for correct basing. All transistor sockets in this instrument are wired for the standard basing as used for metal-cased transistors. Transistors which have heat radiators or are mounted on the chassis use silicone grease to increase heat transfer. Replace the silicone grease when replacing these transistors.

WARNING

Handle silicone grease with care. Avoid getting silicone grease in the eyes. Wash hands thoroughly after use.

ACCESS TO POWER TRANSISTORS

The power transistors associated with the Low-Voltage Power Supply are mounted on the heat radiator at the rear of the instrument. To gain access to these transistors, follow the procedure given previously for removing the Regulator circuit board. The power transistors can be removed from the heat radiator by taking out the screws in the mounting tabs (cases elevated above chassis; be sure power is off).

NOTE

After replacing a power transistor, check that the collector is not shorted to ground before applying power.

INTERCONNECTING PINS REPLACEMENT

Two methods of interconnection are used in this instrument to connect the circuit boards with other boards and components. When the interconnection is made with a coaxial cable, a special end-lead connector plugs into a socket on the board. Other interconnections are made with a pin soldered onto the board. Two types of mating connections are used for these interconnecting pins. If the mating connector is on the end of a lead, an end-lead pin connector is used which mates with the interconnecting pin. The following information provides the replacement procedure for the various types of interconnecting methods.

http://manuals.scopill.com

A. COAXIAL-TYPE END-LEAD CONNECTORS.

Replacement of the coaxial-type end-lead connectors requires special tools and techniques; only experienced maintenance personnel should attempt replacement of these connectors. It is recommended that the cable or wiring harness be replaced as a unit. Refer to your local Tektronix Field Office or representative for replacement cables.

B. CIRCUIT-BOARD PINS.

NOTE

A circuit-board pin replacement kit including necessary tool, instructions, and replacement pins is available from Tektronix, Inc. Order Tektronix Part No. 040-0542-00.

CAUTION

To replace a pin which is mounted on a circuit board, first disconnect any pin connectors. Then, unsolder the damaged pin and pull it out of the circuit board with a pair of pliers. Be careful not to damage the wiring on the board with too much heat. Ream out the hole in circuit board with a 0.031-inch drill. Remove the ferrule from the new interconnecting pin and press the new pin into the hole in the circuit board. Position the pin in the same manner as the old pin. Then, solder the pin on both sides of the circuit board. If the old pin was bent at an angle to mate with a connector, bend the new pin to match the associated pins.

C. CIRCUIT BOARD PIN SOCKETS.

The pin sockets on the circuit boards are soldered to the rear of the board. To replace one of these sockets, first unsolder the pin (use a vacuum-type desoldering tool to remove excess solder). Then straighten the tabs on the socket and remove it from the hole in the board. Place the new socket in the circuit board hole and press the tabs down against the board. Solder the tabs of the socket to the circuit board; be careful not to get solder into the socket.

NOTE

The spring tension of the pin sockets ensures a good connection between the circuit board and the pin. This spring tension can be destroyed by using the pin socket as a connecting point for spring-loaded probe tips, alligator clips, etc.

D. END-LEAD PIN CONNECTORS.

The pin connectors used to connect the wires to the interconnecting pins are clamped to the ends of the associated leads. To replace damaged end-lead pin-connectors, remove the old pin connector from the end of the lead and clamp the replacement connector to the lead.

Some of the pin connectors are grouped together and mounted in a plastic holder; the overall result is that these connectors are removed and installed as a multi-pin connector. To provide correct orientation of this multi-pin connector when it is replaced, an arrow is stamped on the circuit board and a matching arrow is molded into the plastic housing of the multi-pin connector. Be sure these arrows are aligned as the multi-pin connector is replaced. If the individual end-lead pin connectors are removed from the plastic holder, note the color of the individual wires for replacement.

http://manuals.sqhill.com

CATHODE-RAY TUBE REPLACEMENT

To replace the cathode-ray tube, proceed as follows:

WARNING

Use care when handling a crt. Protective clothing and safety glasses should be worn. Avoid striking it on any object which might cause it to crack or implode. When storing a crt, place it in a protective carton or set it face down in a protected location on a smooth surface with a soft mat under the faceplate to protect it from scratches.

A. REMOVAL.

1. Remove the heat radiator/Low-Voltage Regulator circuit board assembly as described previously.

2. Remove the crt base socket from the rear of the crt.

3. Loosen the two screws located on each side of the crt socket until the tension of the springs on these screws is released. Then, press in on the screws to be sure that the crt clamp is loose.

4. Disconnect the deflection-plate connectors. Be careful not to bend these pins.

5. Disconnect the P1830 plug (storage cable assembly).

6. Disconnect the crt anode plug from the jack located on the rear and left side of the crt shield. Ground this lead to the chassis to dissipate any stored charge.

7. Remove the four screws securing the crt bezel to the front panel. Remove the plastic faceplate protector, light filter, and the graticule light assembly.

8. Hold one hand on the crt faceplate and push forward on the crt base with the other. As the crt starts out of the shield, grasp it firmly. Guide the anode lead and the storage cable assembly through the cutout in the crt shield as the crt is removed.

B. REPLACEMENT.

1. Loosen clamp blocks located at each corner of crt shield. Insert the crt into the shield. Guide the anode lead through the hole in the crt shield.

2. Clean the crt faceplate, plastic faceplate protector, and the light filter with denatured alcohol.

3. Re-install the crt bezel, faceplate protector, and light filter. Firmly tighten the two screws.

4. Push forward on the crt base to be certain that the crt is as far forward as possible. Then tighten the two screws beside the crt base until the springs on the screws are fully compressed.

http://manoman.sqrill.com

5. Reposition and tighten down clamp blocks to hold the faceplate of the crt tightly against the implosion shield. The clamps are located at each corner of the crt shield.

6. Replace the crt base socket.

7. Reconnect the crt anode plug.

8. Re-install the heat radiator/Low-Voltage Regulator circuit board assembly.

9. Carefully reconnect the deflection-plate connectors. After each connector is installed, lightly pull on its lead to be sure that it will remain in its socket.

10. Check the calibration of the complete instrument. Calibration procedure is given in Section 2.

SWITCH REPLACEMENT

The push button switches used in the 7633/R7633 are not repairable and should be replaced as a unit if defective.

GRATICULE-BULB REPLACEMENT

To remove a graticule bulb, first remove the two screws (with tab), securing the crt bezel to the front panel. Pull the white tabs to remove the graticule light assembly. Slide the lamp retaining strip from the base of the bulb (turn to the side). Pull the bulb out of the assembly. Reverse the order of removal for replacement.

POWER TRANSFORMER REPLACEMENT

Replace the power transformer only with a direct replacement transformer. When removing the transformer, tag the leads with the corresponding terminal numbers to aid in connecting the new transformer. After the transformer has been replaced, check the performance of the complete instrument using the procedure given in the Calibration section.

HIGH-VOLTAGE COMPARTMENT

The components located in the high-voltage compartment can be reached for maintenance or replacement by using the following procedure. Diagram 7 shows the location of components in the high-voltage compartment and color-coding of the wires.

NOTE

All solder joints in the high-voltage compartment should have smooth surfaces. Any protrusions may cause high-voltage arcing at high altitudes.

http://manoman.sqhill.com

1. Remove the heat radiator/Low-Voltage Regulator assembly as described previously.

2. Disconnect the crt base socket.

3. Disconnect the crt anode plug and discharge it to the chassis. Using an insulated probe or wire, discharge the jack portion of the crt anode connector to chassis ground.

4. Disconnect the multi-pin connectors on the Z-Axis Amplifier board.

5. Remove the screw on the bottom of the high-voltage compartment and the two screws located at the top.

6. Guide the high-voltage compartment away from the instrument chassis. Be careful not to damage any of the components or the pin connectors on the High-Voltage or Z-Axis Amplifier circuit boards. Disconnect the multi-pin connectors on the High-Voltage board.

7. Using an insulated shorting strap, discharge the exposed connections to chassis ground.

8. Disconnect plug P1196 and the four screws which secure the High-Voltage board to the high-voltage compartment. Now, all of the circuitry in the high-voltage box can be reached for maintenance.

9. To replace the high-voltage compartment, reverse the above procedure. Be careful not to pinch any of the interconnecting wires when re-attaching the high-voltage compartment to the chassis.

FUSE REPLACEMENT

Table 4-2 gives the rating, location, and function of the fuses used in this instrument.

TABLE 4-2

Fuse Rating

Circuit Number	Rating	Location	Function
F1000	3.2 A Slow	Rear panel	110-volt line
F1000	1.6 A Slow	Rectifier board	220-volt line
F814	2 A Fast	Rectifier board	High voltage
F855	0.15 A Fast	Low-Voltage Regulator board	+130 volts

RECALIBRATION AFTER REPAIR

After any electrical component has been replaced, the calibration of that particular circuit should be checked, as well as the calibration of other closely related circuits. Since the low-voltage supply affects all circuits, calibration of the entire instrument should be checked if work has been done in the low-voltage supply or if the power transformer has been replaced.

http://manoman.shhh.com

INSTRUMENT REPACKAGING

If the 7633/R7633 is to be shipped for long distances by commercial means of transportation, it is recommended that it be repackaged in the original manner for maximum protection. The original shipping carton can be saved and used for this purpose. The repackaging illustration in the Mechanical Parts list shows how to repackage the 7633/R7633 and gives the part number for the packaging components. New shipping cartons can be obtained from Tektronix, Inc. Contact your local Tektronix Field Office or representative.

PERFORMANCE CHECK/CALIBRATION

PRELIMINARY INFORMATION

Calibration Interval

To ensure instrument accuracy, check the calibration of the 7633 every 1000 hours of operation, or every six months if used infrequently. Before complete calibration, thoroughly clean and inspect this instrument as outlined in the Maintenance section.

Tektronix Field Service

Tektronix, Inc. provides complete instrument repair and recalibration at local Field Service Centers and the Factory Service Center. Contact your local Tektronix Field Office or representative for further information.

Using This Procedure

Index. To aid in locating a step in the Performance Check or Calibration procedures, an index is given preceding Part I—Performance Check and Part II—Calibration.

Performance Check. The performance of this instrument can be checked, without removing the covers or making internal adjustments, by performing only Part I—Performance Check. This procedure checks the instrument against the tolerances listed as a Performance Requirement in the Specification section.

http://manoman.sohu.com

Calibration Procedure. Completion of each step in Part II—Calibration ensures that this instrument is correctly adjusted and performing within all given tolerances. Where possible, instrument performance is checked before an adjustment is made. For best overall performance when performing a complete calibration, make each adjustment to the exact setting, even if the CHECK— is within tolerance.

Partial Procedures. A partial performance check or calibration is often desirable after replacing components, or to touch up the adjustment of a portion of the instrument between major recalibrations. To check or adjust only part of the instrument, start with the Equipment Required list preceding the desired portion of the procedure. To prevent unnecessary recalibration of other parts of the instrument, re-adjust only if the tolerance given in the CHECK— part of the step is not met. If re-adjustment is necessary, also check any steps listed in the INTERACTION— part of the step.

TEST EQUIPMENT REQUIRED

The test equipment listed in Table 5-1, or equivalent, is required for complete calibration of the 7633. Specifications given for the equipment are the minimum necessary for accurate calibration. Therefore, the equipment used must meet or exceed the listed specifications. Detailed operating instructions for the test equipment are not given in this procedure. Refer to the appropriate instruction manual if more information is needed.

If only a Performance Check is to be performed, not all of the listed test equipment is required. Items used only for calibration are indicated by footnote 1. The remaining pieces of equipment are common to both procedures.

Special Calibration Fixtures

Special calibration fixtures are used only where they facilitate instrument calibration. These fixtures are available from Tektronix, Inc. Order by part number through your local Tektronix Field Office or representative.

Calibration Equipment Alternatives

All of the listed test equipment is required to completely check and calibrate this instrument. However, complete checking or calibration may not always be necessary or desirable. The user may be satisfied with checking only selected characteristics, thereby reducing the amount of test equipment actually required.

The Performance Check and Calibration procedures are based on the first item of equipment given as an example. When other equipment is substituted, control settings or calibration setup might need to be altered. If the exact item of equipment given as an example in the Test Equipment list is not available, first check the specifications column carefully to see if any other equipment might suffice. Then check the Usage column to see what this item is used for. If used for a check or adjustment that is of little or no importance to your measurement requirements, the item and corresponding step(s) can be deleted.

The following procedures are written to completely check and adjust the 7633 to the Performance Requirements listed in the Specifications section and in the Operators manual, and to allow interchangeability of plug-in units between mainframes without the need to completely recalibrate the instruments each time. If the applications for which you will use the 7633 do not require the full available performance from the 7633 and plug-in combinations, the procedures and the required equipment list can be shortened accordingly. For example, the basic measurement capabilities of this instrument can be verified by just checking vertical deflection accuracy and basic horizontal timing with 7000-Series real-time plug-in units and the 7633 Calibrator signal. Also, if the 7633 and plug-in combination is to be used as a fixed system without the need to interchange the plug-in units, all tests can be made by substituting amplifier plug-in units and applicable test signals for the 067-0587-01 Signal Standardizer Calibration Fixture.

http://manuals.tektronix.com

Signal Connections

Detailed signal-connection information is not given in this procedure except when critical for a particular test. In general, the rear-panel output connectors should be connected to other equipment with 50-ohm BNC cables. Use a BNC T connector to simultaneously connect a signal to two inputs. Signal-connection and termination information for the test equipment should be available in the associated instruction manual.

Warm-up and Temperature Requirements

Calibration of the 7633/R7633 should be performed after a 30-minute warm-up period in the BISTABLE Storage mode in an ambient temperature of +25°C., ±5°C.

TABLE 5-1

Test Equipment

Description	Minimum Specifications	Usage	Examples of Applicable Test Equipment
1. Precision DC voltmeter	Range, zero to 150 volts; accuracy, within 0.1%.	Calibrator output accuracy check and adjustment.	a. Tektronix DM 501 Digital Multimeter.[2] b. Fluke Model 825A Differential DC Voltmeter.
2. DC voltmeter (VOM)[1]	Range, zero to 4000 volts; accuracy, checked to within 1% at 1500 volts.	High-voltage power supply check. Z-Axis dc levels adjustment.	a. Triplett Model 630-NA. b. Simpson Model 262.
3. Time-Mark generator	Marker outputs, 10 nanoseconds to 0.1 second; marker accuracy, within 0.1%; trigger output, one millisecond.	Crt geometry check and adjustment. Horizontal timing check and adjustment.	a. Tektronix TG 501 Time-Mark Generator.[2] b. Tektronix 2901 Time-Mark Generator.
4. Medium-frequency signal generator	Frequency range from 2.5 MHz to 100 MHz with 50-ohm output, output amplitude 1 V p-p, and accuracy within 2%.	Used throughout Performance Check and Calibration procedure.	a. Tektronix SG 503 Signal Generator.[2] b. Tektronix Type 191 Constant Amplitude Signal Generator.
5. Low-frequency signal generator	Frequency, variable from 1.5 kHz to 2 MHz; output amplitude, variable from 50 mV to 2 V p-p into 50 Ω.	X-Y phase shift check and storage writing rate checks and adjustments.	a. Tektronix FG 502 Function Generator.[2] b. General Radio 1310-B Oscillator with a binding post to BNC adapter (274-QBJ General Radio).
6. Amplifier unit (two identical units required), and a dual display vertical unit	Tektronix 7A-series 65-megahertz bandwidth required for complete procedure as written.	Used throughout procedure to provide vertical input to the instrument under calibration. Identical units required only for X-Y phase shift check.	a. Tektronix 7A15A and a 7A26 Amplifier (may be shared with a 7000-Series test oscilloscope). b. Any 7A-Series plug-in unit (tolerances in some steps may be limited if low-frequency units used).

[1] **Used for calibration only; NOT used for performance check.**

[2] **Requires TM 500-Series Power Module.**

http://manoman.sgrh.com

TABLE 5-1 (cont)

Description	Minimum Specifications	Usage	Examples of Applicable Test Equipment
7. Time-base unit	Tektronix 7B-Series.	Used throughout procedure to provide sweep.	a. Tektronix 7B53A or 7B52 Time Base. b. Any 7B-Series plug-in unit.
8. Mainframe standardizer calibration fixure	Produces gain-check and pulse-response waveforms.	Used throughout procedure to standardize instrument so plug-in units can be interchanged without complete recalibration.	a. Tektronix Calibration Fixture 067-0587-01. b. Calibrated 7000-Series plug-in units with suitable signal sources may be substituted if lower performance is acceptable.
9. 10X passive probe[1]	Compatible with 7B-Series external trigger input.	Used throughout storage calibration.	a. Tektronix P6053B or P6054A Probe (may be shared with test oscilloscope).
10. 100X passive probe[1]	Compatible with test oscilloscope.	Used for storage calibration.	a. Tektronix P6009 Probe.
11. Test oscilloscope	Bandwidth, dc to 100 MHz; minimum deflection factor 10 mV/div; accuracy within 3%.	Used for performance check and calibration.	a. Tektronix 7603 Oscilloscope System with 7A15A Amplifier, 7B53A Time Base, and P6053B Probe. b. Tektronix 465 Oscilloscope with P6065A Probe.
12. T connector	Connectors, BNC.	External Z-axis operation check.	a. Tektronix Part Number 103-0030-00.
13. Termination	Impedance, 50-ohms; accuracy, ±2%; connectors, BNC.	Calibrator output check.	a. Tektronix Part Number 011-0049-01.
14. Cable (two required)	Impedance, 50 ohms; type, RG-58/U; length, 18 and 42 inches; connectors, BNC.	Used throughout procedure for signal interconnection.	a. Tektronix Part Number 012-0076-00 (18-inches). Tektronix Part Number 012-0057-01 (42-inches).
15. BNC to pin-jack cable	Adapts pin-jacks to BNC male connector.	Used for calibrator signal connections.	a. Tektronix Part Number 175-1178-00 (one supplied as standard accessory).

[1] Used for calibration only; NOT used for performance check.

http://manuals.mcgraw-hill.com

TABLE 5-1 (cont)

Description	Minimum Specifications	Usage	Examples of Applicable Test Equipment
16. Screwdriver	Three-inch shaft, 3/32-inch bit.	Used throughout adjustment procedure to adjust variable resistors.	a. Xcelite R-3323.
17. Low-capacitance screwdriver[1]	1.5-inch shaft.	Used throughout adjustment procedure to adjust variable capacitors.	a. Tektronix Part Number 003-0000-00.

http://manoman.sqhill.com

[1] Used for calibration only; NOT used for performance check.

PART I—PERFORMANCE CHECK

Introduction

The following procedure is intended to be used for incoming inspection to determine the acceptability of newly purchased or recently recalibrated instruments. This procedure does not check every facet of the instrument's calibration; rather, it is concerned primarily with those portions of the instrument essential to measurement accuracy and correct operation.

Outline for Part I—Performance Check

A. CRT and Z-Axis Check — Page 5-8

1. Check Focus — Page 5-8
2. Check TRACE ROTATION — Page 5-8
3. Check External Z Axis — Page 5-9

B. Vertical Deflection System Check — Page 5-10

1. Check Vertical Gain — Page 5-10
2. Check Vertical Linearity — Page 5-11
3. Check Bandwidth — Page 5-11
4. Check Channel Isolation — Page 5-12
5. Check BEAMFINDER Operation — Page 5-12
6. Check Vertical Modes — Page 5-12

C. Horizontal Deflection System Check — Page 5-14

1. Check Horizontal Linearity — Page 5-14
2. Check High-Frequency Timing — Page 5-14
3. Check X-Y Phase Shift — Page 5-15
4. Check Horizontal Bandwidth — Page 5-16

D. Calibrator Check — Page 5-17

1. Check Calibrator Output Voltage — Page 5-17
2. Check Calibrator Repetition Rate — Page 5-18

http://manoman.sqhill.com

E. Signals In/Out Check — Page 5-19

1. Check SS READY OUT—REMOTE ERASE — Page 5-19
2. Check EXT SS RESET IN — Page 5-19
3. Check VERT SIG OUT — Page 5-19
4. Check + SAWTOOTH OUT — Page 5-20
5. Check + GATE OUT — Page 5-20

F. Readout System Check — Page 5-21

1. Check READOUT Operation — Page 5-21
2. Check Readout Gate Trig'd Operation — Page 5-22

G. Storage System Check — Page 5-23

1. Check BISTABLE Writing Speed — Page 5-23
2. Check Periodic Erase — Page 5-24
3. Check SAVE and SAVE INTEN — Page 5-24
4. Check VAR PERSIST Writing Speed — Page 5-25
5. Check BISTABLE FAST Writing Speed — Page 5-25
6. Check VAR PERSIST FAST Writing Speed — Page 5-26

http://manoman.sqhill.com

A. CRT AND Z AXIS

Equipment Required:

1. Signal Standardizer
2. Time-base unit
3. Amplifier unit
4. Low-frequency signal generator
5. 50-ohm BNC cables (2)
6. BNC T connector
7. Three-inch screwdriver

Control Settings

Preset the 7633 controls as follows:

INTENSITY	Midrange
VERT MODE	LEFT
TRIG SOURCE	VERT MODE
Display Selection	NON STORE

http://manuals.tektronix.com

1. Check Focus

a. Install the signal standardizer in the left vertical compartment. Set the Test switch for Vert or Horiz Gain and the Rep Rate for one megahertz.

b. Install the time-base unit in the horizontal compartment. Set the sweep rate for 0.5 milliseconds/division with auto, ac-coupled, internal triggering.

c. CHECK—That the focus can be varied by turning the FOCUS control.

2. Check TRACE ROTATION

a. Set the signal standardizer Test switch to Aux In and adjust the Position control to center the trace over the center graticule line.

b. CHECK—That the trace can be made parallel with the center graticule line with the TRACE ROTATION adjustment.

c. Remove the signal standardizer from the left vertical compartment.

3. Check External Z-Axis

a. Install an amplifier unit in the left vertical compartment and set the deflection factor to one volt/division.

b. Connect the low-frequency signal generator to the input connector of the amplifier unit using the BNC T connector. Set the output frequency for one megahertz with an amplitude of two volts.

c. Connect a BNC cable to the EXT Z AXIS connector on the rear panel. Connect the other end of the cable to the BNC T connector on the input of the amplifier unit.

d. CHECK—That the positive slope of the sine wave is being blanked.

e. Disconnect the test equipment and remove the amplifier unit from the 7633.

http://manoman.sqhill.com

B. VERTICAL DEFLECTION SYSTEM

Equipment Required:

1. Signal Standardizer
2. Time-base unit
3. Amplifier unit
4. Medium-frequency signal generator
5. 50-ohm BNC cables (2)
6. BNC to calibrator pin cable
7. BNC T connector

Control Settings

Preset the 7633 controls as follows:

INTENSITY	Midrange
VERT MODE	LEFT
TRIG SOURCE	VERT MODE
Display Selection	NON STORE

http://manoman@ghill.com

1. Check Vertical Gain

a. Install a time-base unit in the horizontal compartment and set it for auto, internal, + slope triggering at a sweep rate of 50 microseconds/division.

b. Install the signal standardizer in the left vertical compartment and set the Test switch to Vert or Horiz Gain.

c. Position the bright center line of the display to the center horizontal graticule line.

d. CHECK—That the deflection of the seven center traces is six divisions ±0.06 division.

e. Pull the REDUCED SCAN switch on.

f. CHECK—That the deflection of the center seven traces is six Reduced Scan divisions ±0.06 division.

g. Push the REDUCED SCAN switch off.

h. Remove the signal standardizer from the left vertical compartment and insert it into the right vertical compartment.

i. Set the VERT MODE to RIGHT.

j. Repeat steps c through g.

k. Return the signal standardizer to the left vertical compartment and set the VERT MODE to LEFT.

2. Check Vertical Linearity

a. Set the signal standardizer Test switch to Vert or Horiz + Step Resp and the Rep Rate to 100 kilohertz.

b. Set the time-base unit for a triggered display at a sweep rate of one millisecond/division.

c. Set the signal standardizer Position control to center the trace while adjusting the Amplitude control for a two-division display.

d. CHECK—Position the two-division display vertically and check for not more than 0.1 division of compression or expansion anywhere within the graticule area.

3. Check Bandwidth

a. Set the signal standardizer Test switch for Vert or Horiz Freq Resp and turn the Amplitude control fully clockwise.

b. Connect the medium-frequency signal generator to the CW In connector of the signal standardizer.

c. Set the time-base unit for auto triggering at a sweep rate of five microseconds/division.

d. Set the signal generator to a reference frequency of three megahertz and adjust the output amplitude for an eight-division display.

http://manomanuals.com

e. Adjust the signal standardizer Position control to bring the top of the waveform down one division.

f. Adjust the amplitude of the signal generator to bring the top of the waveform back up to the top graticule line.

g. Adjust the signal standardizer Position and Amplitude controls to obtain a centered, six-division display. THE CW LEVELED LIGHT MUST STAY ON FOR THIS CHECK.

h. Set the signal generator to cover a range to 100 megahertz.

i. CHECK—That the 7633 display amplitude does not drop below 4.4 divisions as the signal generator frequency is adjusted upward to exactly 100 megahertz. (The signal standardizer CW LEVELED light must be on.)

j. Set the VERT MODE to RIGHT.

k. Remove the signal standardizer from the left vertical compartment and install it in the right vertical compartment.

l. Repeat steps g through i for the right vertical compartment.

m. Disconnect the signal generator and return the signal standardizer to the left vertical compartment.

4. Check Channel Isolation

a. Install an amplifier unit in the right vertical compartment.

b. Set the VERT MODE and TRIG SOURCE for RIGHT.

c. Connect the medium-frequency signal generator to the input of the amplifier unit. Set the signal generator for 100-megahertz output and adjust the amplitude for an eight-division display.

d. Set the time-base unit for a triggered display at a sweep rate of 0.5 microsecond/division.

e. Set the VERT MODE to LEFT.

f. CHECK—For a display of 0.1 division or less while adjusting the signal generator frequency dial from 100 megahertz to 50 megahertz. Do not include the trace width (line thickness) in this measurement.

g. Interchange the amplifier unit and the signal standardizer. Leave the signal generator connected to the amplifier unit.

h. Set the TRIG SOURCE for LEFT and adjust the amplitude for an eight-division display of the 100 megahertz input signal.

i. Set the VERT MODE to RIGHT.

j. Repeat step e.

k. Set the VERT MODE to LEFT and disconnect the signal generator.

http://manoman.sqhill.com

5. Check BEAMFINDER Operation

a. Set the position controls on the amplifier unit and the time-base unit clockwise.

b. Press the BEAMFINDER pushbutton.

c. CHECK—That the trace is within the graticule area.

d. Set the position control on the amplifier unit and the time-base unit counterclockwise and repeat steps b and c.

6. Check Vertical Modes

a. Connect the calibrator 4 V output to the inputs of both the amplifier unit and the signal standardizer (Aux In). Set the signal standardizer Test switch for Aux In.

b. Set the time-base unit for auto, internal triggering, at a sweep rate of 0.5 millisecond/division.

c. Adjust the amplitude of the signal standardizer for two divisions of display and position the trace on the second and forth graticule lines.

d. Set the VERT MODE and TRIG SOURCE to RIGHT.

e. Set the amplifier unit for about two divisions vertical deflection and position the trace on the sixth and eighth graticule lines.

f. Set the TRIG SOURCE to VERT MODE and the VERT MODE to ALT.

g. CHECK—That traces from both vertical compartments appear on the crt.

h. Set the VERT MODE to ADD.

i. CHECK—That the resultant trace is the algebraic sum of the two vertical signals. For example, if the traces in steps c and e were exactly two divisions each, the resultant trace will be exactly four divisions.

j. Set the VERT MODE to ALT and disconnect calibrator cables.

k. Position the two traces about two divisions apart.

l. Set the sweep rate to 50 milliseconds/division.

m. CHECK—That the two vertical traces are alternately displayed with sweeps.

n. Set VERT MODE to CHOP.

o. CHECK—That two separate traces appear simultaneously on the crt.

p. Disconnect all test equipment and remove the plug-in units.

http://manoman.sghill.com

C. HORIZONTAL DEFLECTION SYSTEM

Equipment Required:

1. Signal Standardizer
2. Time-base unit
3. Amplifier unit (2 identical)
4. Time-mark generator
5. Low-frequency signal generator
6. 50-ohm BNC cables (2)

Control Settings

Preset the 7633 controls as follows:

INTENSITY	Midrange
VERT MODE	LEFT
TRIG SOURCE	VERT MODE
Display Selection	NON STORE

http://manoman.sbbill.com

1. Check Horizontal Linearity

a. Install the signal standardizer in the horizontal compartment and a time-base unit in the left vertical compartment.

b. Set the signal standardizer Test switch to Vert or Horiz + Step Resp and adjust the Amplitude and Position controls for a centered, two-division display.

c. CHECK—That there is 0.1 division, or less, compression or expansion when the trace is positioned anywhere within the graticule area.

d. Remove the plug-in units.

2. Check High-Frequency Timing

a. Install an amplifier unit in the left vertical compartment and a time-base unit in the horizontal compartment.

b. Connect the time-mark generator to the input connector of the amplifier unit.

c. Set the time-mark generator for one-millisecond markers and set the deflection factor of the amplifier unit so the markers are at least two division in amplitude.

d. Set the time-base unit for auto, internal triggering at a sweep rate of one millisecond/division.

e. Position the first marker to the left vertical line of the graticule.

f. Set the time-base unit swp cal adjustment for one marker each major graticule division between the first and ninth lines.

g. Set the time-mark generator for 10-nanosecond markers.

h. Set the time-base unit for a sweep rate of 0.05 microsecond/division with the X10 magnifier on. Set the deflection factor of the amplifier unit so the markers are about two divisions in amplitude.

i. CHECK—Refer to the time-base unit instruction manual for performance check or calibration procedures for checking high-frequency timing and linearity. Use the procedures and limits given for the three fastest sweep rates that do not exceed five nanoseconds/division.

j. Pull the REDUCED SCAN switch on.

k. CHECK—That the deflection does not limit on screen.

l. Push the REDUCED SCAN switch off.

m. Disconnect the test equipment and remove the plug-in units from the 7633.

3. Check X-Y Phase Shift

a. Install identical amplifier units in the left vertical and horizontal compartments.

b. Set both amplifier units for 10 millivolts/division deflection factor with dc coupling.

c. Connect the low-frequency signal generator to the inputs of both amplifier units.

d. Set the low-frequency generator for an output of 35 kilohertz and adjust the amplitude for a horizontal and vertical deflection of eight divisions.

http://manofman.sqhill.com

e. CHECK—The lissajous display for an opening at the center vertical line of 0.28 division or less (indicates two degrees or less of phase shift; see Figure 5-1).

f. Disconnect the low-frequency signal generator and remove the amplifier unit from the left vertical compartment.

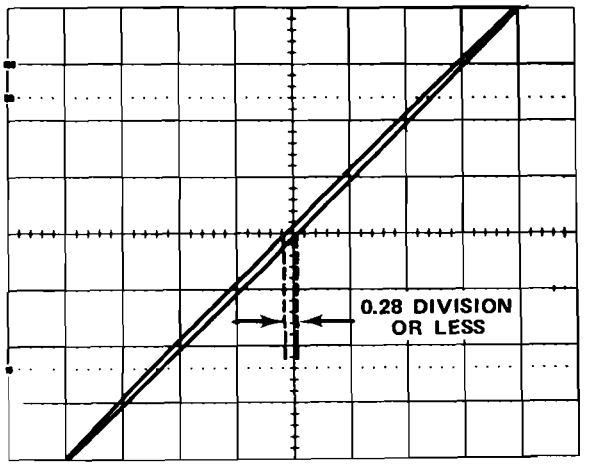

Figure 5-1. Typical crt display when checking X-Y phase shift.

4. Check Horizontal Bandwidth

a. Install a time-base unit in the left vertical compartment.

b. Set the time-base unit for auto triggering at a sweep rate of one millisecond/division (display will free-run).

c. Connect the low-frequency generator to the input of the amplifier unit in the horizontal compartment and adjust the amplitude and deflection factor for eight divisions of horizontal display of a 50-kilohertz reference frequency.

d. Without changing the output amplitude, increase the output frequency of the generator until the frequency is two megahertz.

e. CHECK—That the output horizontal amplitude is at least 5.6 divisions (amplitude is typically greater than seven divisions at two megahertz).

f. Disconnect all test equipment and remove the plug-in units from the 7633.

http://manoman.sqhill.com

D. CALIBRATOR

Equipment Required:

1. Precision dc voltmeter
2. Amplifier unit
3. Time-base unit
4. BNC to pin-jack cable
5. Three-inch screwdriver

Control Settings

Preset the 7633 controls as follows:

INTENSITY	Midrange
VERT MODE	LEFT
TRIG SOURCE	VERT MODE
Display Selection	NON STORE

http://manuman.sqhill.com

1. Check Calibrator Output Voltage

a. Change jumper P1440 to the DC position (see Figure 5-2).

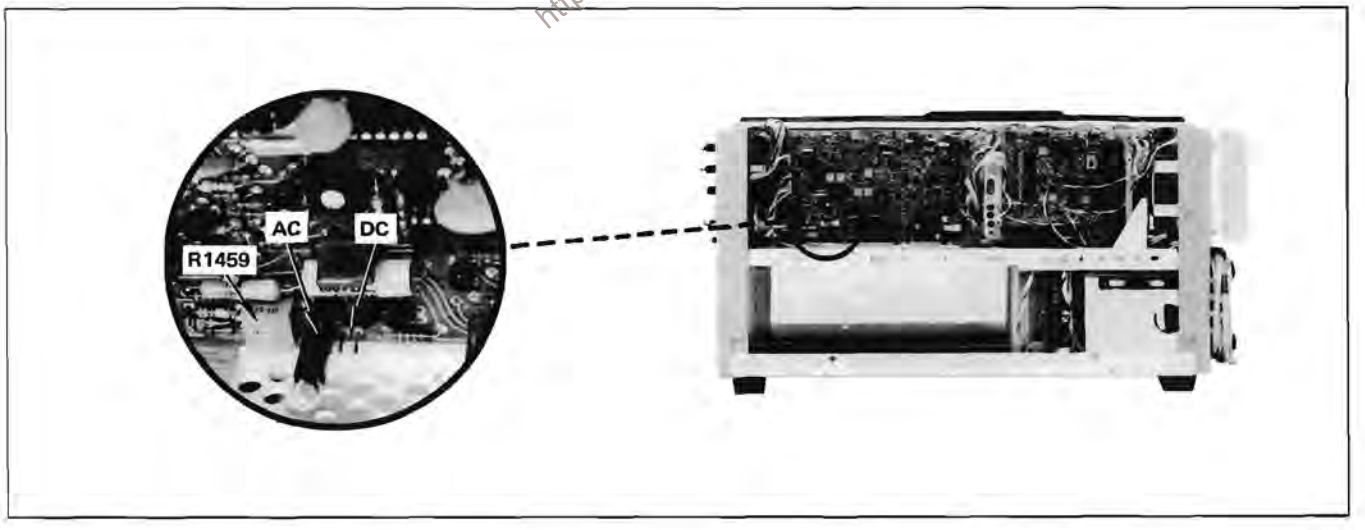

Figure 5-2. Location of Calibrator AC/DC jumper.

b. Connect the precision dc voltmeter between the 4 V and GND pin jacks.

c. CHECK—Meter reading; four volts ±0.04 volt (within ±0.08 volt if this measurement is made outside the +15°C to +35°C range).

d. Connect the precision dc voltmeter between the 0.4 Volt Calibrator pin-jack and pin ground.

e. CHECK—Meter reading; 0.4 volt ±0.004 volt (within 0.008 volt if this measurement is made outside the +15°C to +35°C range).

f. Connect the precision dc voltmeter between the 40 millivolt Calibrator pin-jack and pin ground.

g. CHECK—Meter reading; 40 millivolts ±0.4 millivolt (within 0.8 millivolt if this measurement is made outside the +15°C to +35°C range).

h. Disconnect the precision dc voltmeter.

2. Check Calibrator Repetition Rate

a. Change jumper P1440 to the AC position (see Figure 5-2).

b. Install the amplifier unit in the left vertical compartment and the time-base unit in the horizontal compartment.

c. Set the amplifier unit for a deflection factor of one volt/division.

d. Set the time-base unit for auto, internal triggering at a sweep rate of 0.2 millisecond/division.

e. Connect the four-volt calibrator pin-jack to the input of the amplifier unit with the BNC to pin-jack cable.

http://manoman.sqhit.com

f. Position the start of the square wave to the left line of the graticule.

g. CHECK—Crt display for length of one complete cycle between 4.2 and 6.3 divisions (one kilohertz ±20%).

E. SIGNALS IN/OUT

(Option 7 deletes this procedure)

Equipment Required:

1. Amplifier units (two)
2. Time-base unit
3. 50-ohm BNC termination
4. BNC to pin-jack cable
5. Test oscilloscope
6. 50-ohm BNC cable

Control Settings

Preset the 7633 controls as follows:

INTENSITY	Midrange
VERT MODE	LEFT
TRIG SOURCE	VERT MODE
Display Selection	NON STORE

http://manoman.mhill.com

1. Check SS READY OUT—REMOTE ERASE

a. Connect the calibrator signal to the input of the amplifier unit. Obtain a triggered display of two or more divisions.

b. Press the STORE and VAR PERSIST pushbuttons.

c. CHECK—That when the REMOTE ERASE input connector is grounded that an erase cycle is generated.

d. Press the NON STORE pushbutton.

2. Check EXT SS RESET IN

a. Set the time-base unit to Single Sweep at a sweep rate of 0.5 second/division.

b. CHECK—That when the EXT SS RESET IN input is grounded that the time-base single sweep function is reset.

3. Check VERT SIG OUT

a. Set the time-base unit for auto triggering and adjust the trigger level for a stable display at a sweep rate of one microsecond/division.

b. Connect a BNC cable to the VERT SIG OUT connector and to the amplifier unit in the right vertical compartment. Set the TRIG SOURCE to LEFT.

c. Connect the 0.4 volt CALIBRATOR signal to the input of the amplifier unit in the left vertical compartment. Set both vertical amplifiers for a deflection factor of 0.2 volt/division.

d. CHECK—That a two-division signal is displayed by the left vertical amplifier.

e. Set VERT MODE to RIGHT and check that a signal of about five divisions is displayed by the right vertical amplifier.

f. Interchange the connections to the vertical amplifiers (VERT SIG OUT to the left amplifier and the calibrator to the right amplifier unit). Set the TRIG SOURCE to RIGHT.

g. CHECK—That a two-division signal is displayed by the right vertical amplifier.

h. Set the VERT MODE to LEFT and check that a signal of about five divisions is displayed.

i. Install a 50-ohm termination between the VERT SIG OUT cable and the input of the left vertical amplifier.

j. Set the deflection factor of the left vertical to 10 millivolts/division. Check for a display of about five divisions.

k. Disconnect all cables.

4. Check + SAWTOOTH OUT

a. Connect the + SAWTOOTH OUT to the input of the left vertical amplifier. Set the deflection factor of the left vertical amplifier for two volts/division.

b. CHECK—For a sawtooth display of about five divisions in amplitude and greater than 10 divisions in length.

http://maanoman.mghill.com

5. Check + GATE OUT

a. Connect the + GATE OUT to the vertical input of the test oscilloscope and set the deflection factor for two volts/division. Set the time/division switch to 1 millisecond/division. Place the GATE selector switch in the MAIN GATE position.

b. CHECK—That the displayed signal is about five divisions in amplitude.

F. READOUT SYSTEM

(Option 1 deletes this procedure)

Equipment Required:

1. Dual trace vertical amplifier unit
2. Time-base unit

Control Settings

Preset the 7633 controls as follows:

INTENSITY	Midrange
READOUT	Midrange
VERT MODE	CHOP
TRIG SOURCE	VERT MODE
Display Selection	NON STORE

1. Check READOUT Operation

a. Install the amplifier unit, set for dual trace mode, in the left vertical compartment.

b. Push and hold the identify buttons on the amplifier unit. Switch S2110, located on the Readout circuit board, should be in the free-run position (see Figure 8-21).

c. CHECK—That the word IDENTIFY is within the top division and the bottom division of the graticule.

http://manoman.sqhill.com

d. CHECK—For completeness of characters without over-scanning (over-scanning causes a bright dot where the traces overlap) and check for correctness.

e. CHECK—That the words IDENTIFY are positioned within the left third of the graticule area.

f. Remove the amplifier unit from the left vertical compartment and install it in the right vertical compartment.

g. Repeat steps b, c, and d.

h. CHECK—That the words IDENTIFY are positioned within the center third of the graticule area.

i. Remove the amplifier unit from the right vertical compartment and install it in the horizontal compartment.

j. Repeat steps b, c, and d.

k. CHECK—That the words IDENTIFY are positioned within the right third of the graticule area.

l. Remove the amplifier unit from the horizontal compartment and install it in the left vertical compartment.

2. Check Readout Gate Trig'd Operation

a. Set switch S2110 to Gate Trig'd position (see Figure 8-21).

b. Install the time-base unit in the horizontal plug-in compartment and set the sweep rate to 0.1 second/division.

c. CHECK—That no readout information is displayed till after the sweep. At fast sweep rates, this is not noticeable.

d. Remove the plug-in units from the 7633.

http://manoman.sqhill.com

G. STORAGE SYSTEM

Equipment Required:

1. Time-base unit
2. Amplifier unit
3. Low-frequency sine-wave generator
4. Medium-frequency sine-wave generator
5. 50-ohm BNC cable

Control Settings

Preset the 7633 controls as follows:

INTENSITY	Midrange
VERT MODE	LEFT
TRIG SOURCE	VERT MODE
READOUT INTENSITY	CCW (off)
Display Selection	NON STORE
ERASE/PERIODIC	CCW (in detent, off)
PERSISTENCE	CCW (maximum)
Storage Selection	BI STABLE
SAVE INTEN	Clockwise
STORAGE LEVEL	Two o'clock position

http://manuals.sqhill.com

1. Check BISTABLE Writing Speed

a. Install a time-base unit in the horizontal compartment and an amplifier unit in the left vertical compartment.

b. Connect the low-frequency sine-wave generator to the amplifier unit and adjust for a 6.4-division display of a 1.5-kilohertz signal.

c. Set the time-base unit for a sweep rate of 0.5 millisecond/division, with auto, ac-coupled, internal triggering.

d. Adjust the INTENSITY to maximum without blooming trace.

e. Press the STORE pushbutton.

f. Set the time-base unit for single sweep.

g. Press the ERASE pushbutton.

h. CHECK—That the single-shot sine wave stores and does not fade up or down in one minute. This checks the Bistable writing speed at .03 division/microsecond.

i. Press the NON STORE pushbutton.

j. Pull the REDUCED SCAN switch on.

k. Set the time-base unit for X10 magnification and auto triggering.

l. Adjust the low-frequency sine-wave generator for 6.4 small divisions of a 10-kilohertz signal (writing speed 0.2 division/microsecond).

m. Set the time-base unit for single sweep.

n. Press the STORE pushbutton.

o. Press the ERASE pushbutton.

p. CHECK—That the 10-kilohertz signal will store in the Reduced Scan graticule area without fading up or down in one minute.

q. Press the REDUCED SCAN switch off.

http://manoman.sqhill.com

2. Check Periodic Erase

a. Set the time-base unit for single sweep.

b. Turn the PERIODIC ERASE knob fully clockwise (minimum time).

c. CHECK—That erase period is less than or equal to two seconds.

d. Turn the PERIODIC ERASE knob fully counterclockwise but not into the detent position (maximum time).

e. CHECK—That the erase period is 10 seconds or greater.

f. Turn the PERIODIC ERASE knob into the detent position.

g. CHECK—That the display no longer erases automatically.

3. Check SAVE and SAVE INTEN

a. Turn the SAVE INTEN knob fully clockwise and set the READOUT INTENSITY for a viewable display.

b. Press the ERASE pushbutton.

c. Press the SAVE pushbutton.

d. Press the ERASE pushbutton.

e. CHECK—That the display will not erase.

f. CHECK—That the screen goes dark as the SAVE INTEN control is turned counterclockwise.

g. With the SAVE INTEN control fully counterclockwise, press the STORE pushbutton.

h. Press the SAVE pushbutton.

i. CHECK—That the Readout is visible during STORE but goes dark in SAVE.

j. Press the NON STORE pushbutton and turn the READOUT INTENSITY off.

4. Check VAR PERSIST Writing Speed

a. Set the time-base unit in the 7633 for a sweep rate of 20 microseconds/division with auto, ac-coupled, internal triggering and set the amplifier unit for dc input.

b. Set the low-frequency sine-wave generator for a 6.4 divisions display of a 25-kilohertz signal (writing speed of 0.5 division/microsecond).

c. Set the INTENSITY to maximum without blooming trace.

d. Set the time-base unit to single sweep.

e. Press the STORE and VAR PERSIST pushbuttons.

f. CHECK—That the signal will store for 30 seconds in the center 6 x 8 divisions of the graticule area (the PERSISTENCE control is in the counterclockwise position and the STORAGE LEVEL is in the two o'clock position). Increasing STORAGE LEVEL will increase writing speed while decreasing view time and vice versa.

http://manoman.stohl.com

g. Press NON STORE.

h. Set the time-base unit for a sweep rate of 50 microseconds/division with auto triggering and X10 magnification.

i. Pull the REDUCED SCAN switch on.

j. Adjust the low-frequency sine-wave generator for 6.4 REDUCED SCAN divisions display of a 150-kilohertz signal (writing speed of three divisions/microsecond).

k. Set the time-base unit for single sweep.

l. Press the STORE pushbutton.

m. CHECK—That the signal will store for 30 seconds in the center 8 x 10 divisions of the Reduced Scan graticule area.

n. Push the REDUCED SCAN switch off.

5. BISTABLE FAST Writing Speed

a. Press the NON STORE, FAST, and BISTABLE pushbuttons.

b. Set the time-base unit for auto triggering and a sweep rate of two microseconds/division.

c. Connect the medium-frequency signal generator to the amplifier unit input and adjust the amplitude for a 6.4-division display of a 2.5-megahertz signal (writing speed is 50 divisions/microsecond).

d. Turn INTENSITY to maximum without blooming trace.

e. Set the time-base unit for single sweep.

f. Turn STORAGE LEVEL to the two o'clock position.

g. Press the STORE pushbutton.

h. Press the ERASE pushbutton.

i. CHECK—That the trace stores.

j. Press the NON STORE pushbutton.

k. Pull the REDUCED SCAN switch on and reduce the INTENSITY.

l. Set the time-base unit for a sweep rate of 0.2 microsecond/division and auto triggering.

m. Set the medium-frequency signal generator for 20 megahertz and adjust the amplitude for 6.4 REDUCED SCAN divisions of display (writing speed 400 divisions/microsecond).

n. Set the time-base unit for single sweep.

o. Press the STORE pushbutton.

p. CHECK—That the signal can be stored in the center 8 x 10 divisions of the Reduced Scan graticule area.

http://manoman.sqhill.com

q. Press REDUCED SCAN off.

6. Check VAR PERSIST FAST Writing Speed

a. Press NON STORE and set the time-base unit for auto triggering at a sweep rate of 0.1 microsecond/division.

b. Adjust the medium-frequency signal generator to display 6.4 divisions of a 7.5-megahertz signal (writing speed of 150 divisions/microsecond).

c. Turn the INTENSITY to maximum without blooming the trace.

d. Set the time-base unit for single sweep (triggered).

e. Press the VAR PERSIST and STORE pushbuttons.

f. Set the STORAGE LEVEL control to the two o'clock position.

g. CHECK—That the signal will store after an erase cycle.

h. Push the NON STORE pushbutton and pull the REDUCED SCAN switch on.

i. Set the time-base unit for 0.1 microsecond/division sweep rate, auto triggering, and X10 magnification.

j. Adjust the medium-frequency signal generator to display 7.1 Reduced Scan divisions of a 100-megahertz signal (writing speed of 2220 divisions/microsecond).

k. Set the time-base unit for single sweep.

l. Press the STORE pushbutton.

m. CHECK—That the waveform will store within the center 8 x 10 divisions of the Reduced Scan graticule area for 30 seconds.

n. Press the NON STORE pushbutton and the REDUCED SCAN switch.

o. Disconnect all test equipment. This completes the Performance Check procedure.

http://manoman.sqhill.com

PART II—CALIBRATION

Introduction

The following procedure returns the 7633 to correct calibration. All limits and tolerances given in this procedure are calibration guides and should not be interpreted as instrument specifications except as specified in the Specifications section of this manual.

Outline for Part II—Calibration

A. Low Voltage Power Supply — Page 5-31

1. Adjust −50 Volt Power Supply — Page 5-31
2. Check Remaining Power Supply Voltages — Page 5-31
3. Check High-Voltage Power Supply — Page 5-32

B. CRT and Z Axis — Page 5-33

1. Adjust Z-Axis DC Levels — Page 5-33
2. Adjust Z-Axis Compensation and Check Drive — Page 5-34
3. Adjust Focus and Astigmatism — Page 5-35
4. Adjust Trace Rotation — Page 5-35
5. Adjust Y-Axis Alignment — Page 5-35
6. Adjust Geometry — Page 5-35
7. Adjust Horizontal Gain — Page 5-35
8. Adjust Reduced Scan Focus and Astigmatism — Page 5-36
9. Adjust Reduced Scan Horizontal Gain — Page 5-36
10. Adjust Vertical Gain — Page 5-36
11. Adjust Auto Focus Compensation — Page 5-36
12. Adjust Auto Focus Bias and Gain — Page 5-37
13. Check External Z-Axis — Page 5-37

C. Vertical Deflection System — Page 5-38

1. Adjust Vertical Centering — Page 5-38
2. Adjust Vertical Gain — Page 5-38

http://manoman.sqhill.com

3. Adjust Thermal Balance — Page 5-39

4. Check Vertical Linearity — Page 5-39

5. Adjust Vertical High-Frequency Compensation — Page 5-40

6. Check Bandwidth — Page 5-41

7. Check Channel Isolation — Page 5-42

8. Check BEAMFINDER Operation — Page 5-43

9. Check Vertical Modes — Page 5-43

D. Horizontal Deflection System — Page 5-44

1. Adjust Limit Center — Page 5-44

2. Adjust Horizontal Gain — Page 5-45

3. Adjust DC Balance — Page 5-45

4. Check Horizontal Linearity — Page 5-45

5. Transient Response — Page 5-45

6. Adjust High-Frequency Timing — Page 5-46

7. Check X-Y Phase Shift — Page 5-47

8. Check Horizontal Bandwidth — Page 5-47

E. Calibrator — Page 5-49

1. Adjust Calibrator Output Voltage — Page 5-49

2. Check Calibrator Repetition Rate — Page 5-50

F. Signals In/Out — Page 5-51

1. Check SS READY OUT (REMOTE ERASE) — Page 5-51

2. Check EXT SS RESET IN — Page 5-51

3. Check VERT SIG OUT — Page 5-52

4. Check + SAWTOOTH OUT — Page 5-52

5. Check + GATE OUT — Page 5-52

http://manoman.sqhill.com

G. Readout Operation Page 5-53

1. Check READOUT Operation Page 5-53

2. Check Readout Gate Trig'd Operation Page 5-54

H. Storage System Page 5-55

1. Check NON STORE Voltage Levels Page 5-55

2. Check BISTABLE Voltage Levels Page 5-56

3. Check BISTABLE ERASE Waveforms Page 5-56

4. Adjust BISTABLE Op Level and Check BISTABLE Writing Speed Page 5-58

5. Check PERIODIC ERASE Page 5-59

6. Check SAVE Mode and SAVE INTEN Page 5-60

7. Check VAR PERSIST Voltage Levels Page 5-60

8. Adjust VAR PERSIST Op Level and Prep Level Page 5-61

9. Check Persistence Pulses Page 5-62

10. Check VAR PERSIST Writing Speed Page 5-63

11. Adjust VAR PERSIST FAST Front Mesh Stability Page 5-64

12. Adjust BISTABLE FAST Page 5-65

13. Adjust BISTABLE FAST Stability and Writing Speed Page 5-66

14. Check REDUCED SCAN BISTABLE FAST Writing Speed Page 5-67

15. Adjust VAR PERSIST FAST Page 5-67

16. Adjust VAR PERSIST FAST Stability and Writing Speed Page 5-68

http://manoman.sqhill.com

A. LOW VOLTAGE POWER SUPPLY

Equipment Required:

1. Dc voltmeter (VOM) precision
2. Three-inch screwdriver

Before you begin, see **ADJUSTMENT LOCATIONS** in the Diagrams section.

Control Settings

Preset the 7633 controls as follows:

INTENSITY	Counterclockwise (off)
VERT MODE	LEFT
TRIG SOURCE	LEFT
Display Selection	NON STORE
REDUCED SCAN	Off

1. Adjust —50 Volt Power Supply

a. Connect the voltmeter between —50 volts (see Figure 8-23) and chassis ground.

b. CHECK—Meter reading; —50 volts ±0.1 volt.

c. ADJUST— —50 volts adjustment R881 (see Figure 8-23) for a meter reading of exactly —50 volts.

d. INTERACTION—Any change in the setting of R881 can affect the operation of all other circuits in the 7633.

2. Check Remaining Power-Supply Voltages

a. CHECK—Each supply with the voltmeter to ensure that all output voltages are within the tolerances given in Table 5-2. Power supply test points are shown in Figure 8-17.

NOTE

Ripple and regulation of the individual power supplies can be checked using the procedure given under Troubleshooting Techniques in Section 4.

http://manoman.mghill.com

TABLE 5-2

Power Supply Tolerances

Power Supply	Test Point	Output Voltage Tolerance
−50 Volt	Pin 8 of P1171	±0.1 Volt
−15 Volt	Pin 1 of P1171	±0.1 Volt
+5 Volt	Pin 2 of P1171	±0.1 Volt
+15 Volt	Pin 3 of P1171	±0.1 Volt
+50 Volt	Pin 4 of P1171	±0.3 Volt
+130 Volt	Pin 6 of P1171	±5.0 Volts

3. Check High-Voltage Power Supply

a. Press the POWER switch to turn off the instrument.

b. Set the voltmeter to measure at least −1525 volts and connect it between the high-voltage test point (see Figure 5-3) and chassis ground.

c. Press the POWER switch to turn the instrument on.

d. CHECK—That the high-voltage test point measures −1475 volts ±45 volts.

e. Press the POWER switch to turn OFF the instrument before disconnecting the voltmeter.

f. Disconnect the voltmeter and press the POWER switch to turn the power back on.

http://manomanuals.com

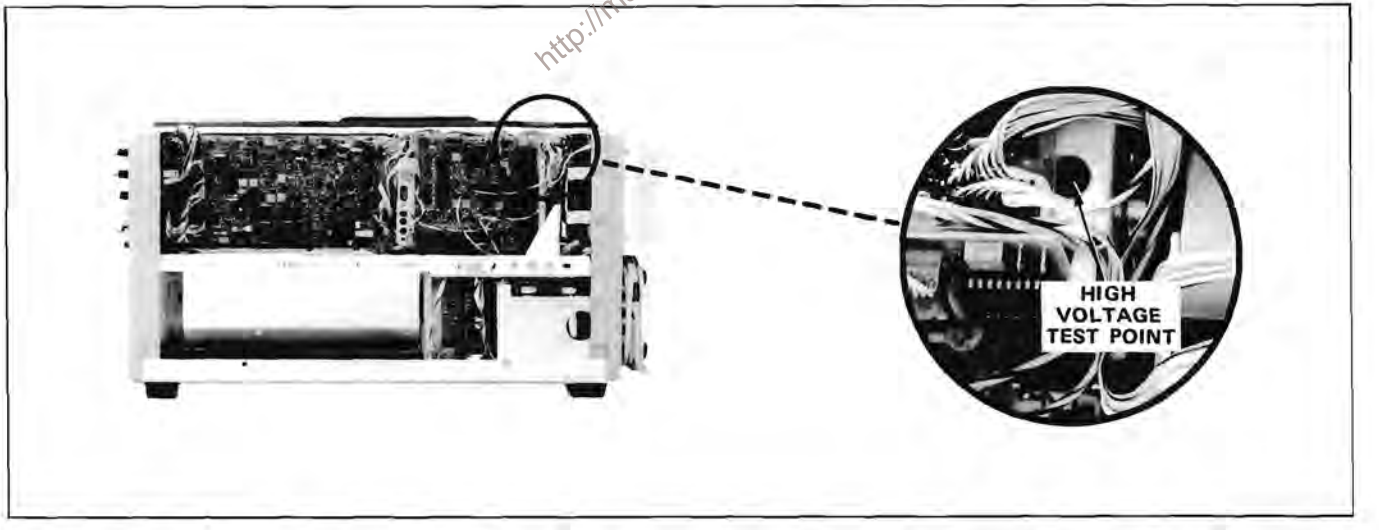

Figure 5-3. Location of High-Voltage Test Point.

B. CRT AND Z-AXIS

Equipment Required:

1. Signal standardizer
2. Time-base unit
3. Low-frequency signal generator
4. 10X probe
5. Time-mark generator
6. 50-ohm BNC cable
7. Low-capacitance screwdriver
8. Test oscilloscope

Before you begin, see ADJUSTMENT LOCATIONS in the Diagrams section.

http://manoman.sqhill.com

Control Settings

Preset the 7633 controls as follows:

INTENSITY	Counterclockwise (off)
VERT MODE	LEFT
TRIG SOURCE	LEFT
Display Selection	NON STORE
Storage Selection	VAR PERSIST
REDUCED SCAN	Off (pushed in)
READOUT INTENSITY	Off (in detent)

1. Adjust Z-Axis DC Levels

a. Install the signal standardizer set for Aux In, in the left vertical compartment and a time-base unit in the horizontal compartment.

b. Set the time-base unit for a sweep rate of 1.0 millisecond/division and auto triggering.

c. Set the test oscilloscope for a vertical deflection factor of 10 volts/division at probe tip with dc input at a sweep rate of one millisecond/division.

d. Connect the 10X probe from the test oscilloscope to the output of the Z-Axis amplifier at R1118 (inside lead, see Figure 8-17).

e. Turn the INTENSITY control on the 7633 to obtain a 15-volt signal amplitude on the test oscilloscope.

f. ADJUST—CRT Grid Bias adjustment R1248 (see Figure 5-4) until the trace on the 7633 just disappears.

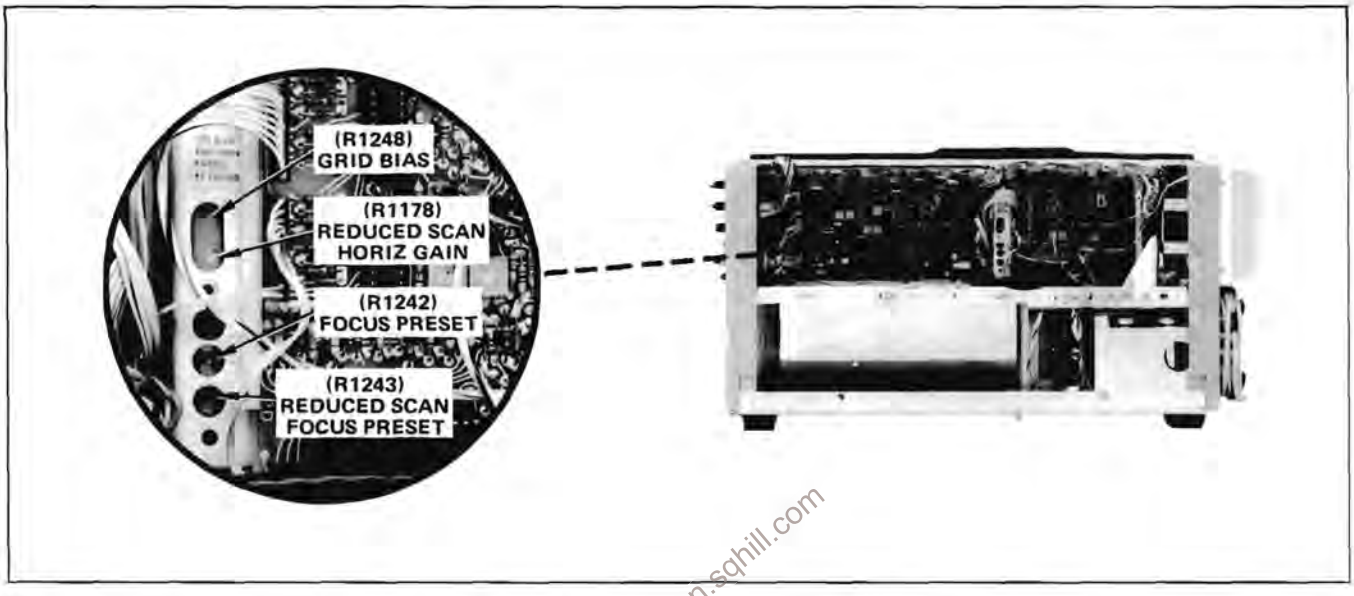

http://manoman.sqhill.com

Figure 5-4. Location of adjustments in High-Voltage cover.

g. Set the time-base unit for a sweep rate of 50 milliseconds/division.

h. Position the trace vertically off screen and turn the INTENSITY control fully clockwise.

i. CHECK—That the test oscilloscope display amplitude is 58 volts or greater. Note this reading.

j. Set the time-base unit for a sweep rate of 0.1 second/division.

k. CHECK—That the test oscilloscope display amplitude is between 20 and 30 volts less than the amplitude in step i.

2. Adjust Z-Axis Compensation and Check Drive

a. Set the time-base unit in the 7633 for a sweep rate of 0.5 microsecond/division.

b. Set the test oscilloscope for 0.5 volt/division (five volts/division at 10X probe tip) vertical deflection with dc coupling and for a sweep rate of 0.2 microsecond/division.

c. Position the 7633 trace off screen vertically.

d. Adjust the 7633 INTENSITY control for a six-division display (30 volts) on the test oscilloscope.

e. ADJUST—C1115 (see Figure 8-17) for optimum square leading corner and less than 1.5 volts (1.5 minor divisions) of aberration. Risetime should be less than 50 nanoseconds.

f. Set the INTENSITY to midrange and center the trace vertically on the crt.

g. Remove the 10X probe.

3. Adjust Focus and Astigmatism

a. Set the front panel FOCUS control to midrange.

b. Center the time-base unit Position control.

c. Set the INTENSITY for a usable display.

d. Set the signal standardizer to Aux In and connect the low-frequency signal generator to the Aux In connector. Adjust the amplitude for approximately one division vertical display of a 50-kilohertz sine wave.

e. Set the time-base unit to display about five complete cycles of the sine wave.

f. ADJUST—Focus Preset R1242 (see Figure 5-4) and Astigmatism adjustment R1274 (see Figure 8-17) for the best overall focus.

g. Disconnect the signal generator.

http://manoman.sqhk.com

4. Adjust Trace Rotation

a. Set the center of the trace on the center horizontal graticule line.

b. ADJUST—TRACE ROTATION so the trace is parallel with the center horizontal graticule line.

5. Adjust Y-Axis Alignment

a. Interchange the time-base unit and the signal standardizer.

b. Position the trace on the center vertical graticule line.

c. ADJUST—R1284 (see Figure 8-17) to align the trace with the center vertical line.

6. Adjust Geometry

a. Set the signal standardizer to Vert or Horiz Gain with a Rep Rate of 100 kilohertz.

b. ADJUST—Geometry adjustment R1292 for minimum bowing or tilt of the vertical traces.

c. CHECK—For less than 0.1 division of bowing or tilt of the vertical traces.

7. Adjust Horizontal Gain

a. ADJUST—R512 (see Figure 8-20) for exactly eight divisions between the second and eighth traces.

8. Adjust Reduced Scan Focus and Astigmatism

a. Pull REDUCED SCAN switch (on).

b. Set the signal standardizer to Aux In and connect the low-frequency signal generator to the Aux In connector. Adjust the amplitude for approximately one Reduced Scan division vertical display of a 50-kilohertz sine wave.

c. Set the time-base unit to display about five complete cycles (across the Reduced Scan graticule area) of the sine wave.

d. ADJUST—REDUCED SCAN Focus Preset R1243 (see Figure 5-4) and the REDUCED SCAN Astigmatism adjustment R1276 (see Figure 8-17) for the best overall focus of the sine wave.

9. Adjust Reduced Scan Horizontal Gain

a. Set the signal standardizer Test to Vert or Horiz Gain.

b. Adjust the INTENSITY for a usable display.

c. ADJUST—Reduced Scan Horizontal Gain adjustment R1178 (see Figure 5-4) for exactly eight reduced-scan divisions between the second and tenth traces.

d. Push REDUCED SCAN switch (off).

10. Adjust Vertical Gain

a. Interchange the time-base unit and the signal standardizer, placing the time-base unit into the horizontal compartment and the signal standardizer into the left vertical compartment.

b. Set the time-base unit for a free-running (nontriggered) sweep.

c. ADJUST—Vertical Gain adjustment R2446 (see Figure 8-19) for exactly six divisions between the second and eighth traces.

d. Pull REDUCED SCAN switch (on).

e. ADJUST—Reduced Scan Vertical Gain adjustment R1171 (see Figure 8-17) for exactly six Reduced Scan divisions between the third and ninth traces.

f. Push REDUCED SCAN switch (off).

11. Adjust Auto Focus Compensation

a. Connect the 10X probe to the front end (see Figure 8-17) of R1166.

b. Set the test oscilloscope for ac coupling and a vertical deflection factor of 0.5 volt/division (5 volts/division at probe tip).

c. Turn the READOUT control out of the detent position but leave it set to the counterclockwise end.

d. Remove Q2225 from the Readout Board (see Figure 8-21).

e. Adjust the 7633 INTENSITY for a six-division display on the test oscilloscope.

http://manoman.sqhill.com

f. Set the test oscilloscope for negative slope triggering and a 10 microseconds/division sweep rate.

g. ADJUST—C1159 (see Figure 8-17) for optimum square leading corner and less than 2.5 volts (2.5 minor divisions) of aberration.

h. Set the test oscilloscope time base for X10 magnification.

i. Check that the pulse falltime is 0.6 microsecond or less.

j. Remove the probe and replace Q2225.

k. Turn the READOUT off.

12. Adjust Auto Focus Bias and Gain

a. Remove the signal standardizer and replace it with an amplifier unit. Connect the low-frequency signal generator to the amplifier input connector using a BNC T connector.

b. Set the signal generator for one megahertz with approximately two volts amplitude and set the amplifier unit for a one-division display.

c. Set the INTENSITY for midrange.

d. RE-ADJUST—Reduced Scan Focus Preset adjustment R1243 (see Figure 5-4) and Reduced Scan Astigmatism adjustment R1276 (see Figure 8-17) for optimum focus.

e. Pull REDUCED SCAN switch (on).

f. Set the 7633 INTENSITY control to the three o'clock position.

g. ADJUST—Reduced Scan Focus Gain adjustment R1147 (see Figure 8-17) for optimum focus.

h. Push REDUCED SCAN switch (off).

i. ADJUST—Focus Gain adjustment R1141 for optimum focus.

j. Reduce INTENSITY to midrange.

13. Check External Z-Axis

a. Connect a BNC cable from the unused end of the BNC T connector (connected to the input connector of the amplifier unit) to the 7633 EXT Z-AXIS input located on the rear panel.

b. CHECK—That the positive slope of the sine wave is being blanked out.

c. Remove the signal generator and EXT Z-AXIS connections.

d. Remove the amplifier unit from the vertical compartment.

http://manoman.sqhit.com

C. VERTICAL DEFLECTION SYSTEM

Equipment Required:

1. Signal standardizer
2. Time-base unit
3. Amplifier unit
4. Low-capacitance screwdriver
5. Medium-frequency signal generator
6. 50-ohm BNC cable (2)
7. Calibrator-pin to BNC cable
8. BNC T connector

Before you begin, see ADJUSTMENT LOCATIONS in the Diagrams section.

Control Settings

Preset the 7633 controls as follows:

INTENSITY	Midrange
VERT MODE	ALT
TRIG SOURCE	VERT MODE
Display Selection	NON STORE
READOUT INTENSITY	Off
REDUCED SCAN	Off

http://manuman.sqhill.com

1. Adjust Vertical Centering

a. Install a time-base unit in the horizontal compartment and set it for auto, internal, + slope triggering at a sweep rate of one millisecond/division.

b. ADJUST—Vertical Centering adjustment R2433 (see Figure 8-19) to position the trace to the center horizontal graticule line.

c. Set the VERT MODE to LEFT.

2. Adjust Vertical Gain

a. Install the signal standardizer in the left vertical compartment. Set the Test switch for Vert or Horiz Gain and the Rep Rate to one kilohertz.

b. Set the time-base unit for a sweep rate of 50 microseconds/division.

c. Position the bright center line of the display to the center horizontal graticule line.

d. CHECK—That the deflection of the seven center traces is six divisions ±0.06 division.

e. ADJUST—Vertical Gain adjustment R2446 (see Figure 8-19) for exactly six divisions of deflection for the center seven traces.

f. Remove the signal standardizer from the left vertical compartment and insert it into the right vertical compartment.

g. Set the VERT MODE to RIGHT.

h. Repeat steps d and e.

i. READJUST—Vertical Gain adjustment R2446, if necessary, for the correct tolerances in both steps e and h.

j. Remove the signal standardizer from the right vertical compartment and insert it into the left vertical compartment.

3. Adjust Thermal Balance

NOTE

If the instrument being calibrated is not equipped with the readout feature, set the Thermal Balance control R2527 for a reading of +8.65 volts measured at the R2527 end of C2524 (see Figure 8-19), and omit this part.

http://manoman.sqhill.com

a. Set the signal standardizer Test switch to + Step Resp and Amplitude to minimum. Position the trace to the top graticule line.

b. Install an amplifier unit in the right vertical compartment.

c. Set the VERT MODE to ALT. Position the amplifier-unit trace on the bottom graticule line. Set the time-base unit for a sweep rate of 10 milliseconds/division.

d. Set the 7633 INTENSITY to midrange and advance the READOUT INTENSITY till the readout is viewable.

e. ADJUST—Thermal Balance control R2527 (see Figure 8-19) for minimum vertical movement of the displayed readout characters. If appreciable adjustment is required, recheck the Vertical Gain adjustment in step C-2.

4. Check Vertical Linearity

a. Remove the amplifier unit from the right vertical compartment.

b. Set the VERT MODE to LEFT.

c. Set the signal standardizer Test switch to Vert or Horiz + Step Resp and the Rep Rate to 100 kilohertz.

d. Set the time-base unit for a triggered display at a sweep rate of one millisecond/division.

e. Set the signal standardizer Position control to center the trace while adjusting the Amplitude control for a two-division display.

f. CHECK—Position the two-division display vertically and check for not more than 0.1 division of compression or expansion anywhere within the graticule area.

5. Adjust Vertical High-Frequency Compensation

a. Install the signal standardizer in the left vertical compartment.

b. Set the VERT MODE to LEFT.

c. Set the signal standardizer Amplitude and Position controls for a centered, six-division display. Set the Rep Rate for 100 kilohertz.

d. Set the time-base unit for a sweep rate of one microsecond/division and adjust the trigger level for a stable display.

e. CHECK—For optimum square corner and flat top on the displayed pulse with aberrations not to exceed ±0.1 division with total peak-to-peak aberrations not to exceed 0.2 division.

f. ADJUST—R2409 (4), shown in Figure 8-19, for a flat pulse top and mimimum aberrations in the first one-microsecond area.

g. Set the time-base unit for a sweep rate of 0.5 microsecond/division and adjust the trigger level for a stable display.

h. CHECK—For a flat top on the first 500-nanosecond portion of the pulse within the limits in step e.

http://manoman.sqhill.com

i. ADJUST—R2509 (5) for a flat pulse top in the first 500-nanosecond area.

j. Set the signal standardizer Rep Rate to one megahertz and the time base for a sweep rate of 0.1 microsecond/division. Adjust the trigger level for a stable display.

k. CHECK—For a flat first 120-nanosecond area of the pulse top within the aberration limits listed in step e.

l. ADJUST—R2511 (7) and C2511 (8) for flatness and minimum aberrations of the first 120-nanosecond area of the pulse top. R2511 adjusts tilt and C2511 adjusts for flatness.

m. Set the sweep rate to 0.05 microsecond/division and adjust the trigger level for a stable display.

n. CHECK—For a flat first 30-nanosecond area of the pulse top within the limits listed in step e.

o. ADJUST—R2411 (6) for flatness in the first 30-nanosecond area of the pulse top.

p. Set the sweep rate for 20 nanoseconds/division and adjust the trigger level for a stable display.

q. CHECK—For optimum leading corner and flat pulse top with minimum aberrations in the first 10-nanosecond area within the limits listed in step e.

r. ADJUST—Refer to Table 5-3 for settings and adjustments for the first two, five, and 10 nanoseconds of the pulse. Aberrations should remain within the limits listed in step e.

NOTE

Because the adjustments in Table 5-3 are interactive, it may be necessary to repeat various steps listed in this procedure to obtain optimum response with minimum aberrations.

TABLE 5-3

Signal Standardizer Rep Rate	Best Sweep Rate (time/division)	Adjustment	Primary Area of Pulse Affected
100 kHz	1 microsecond	R2409 (4)	First microsecond
100 kHz	0.5 microsecond	R2509 (5)	First 500 nanoseconds
1 MHz	0.1 microsecond	R2511 (7) C2511 (8)	First 120 nanoseconds
1 MHz	0.05 microsecond	R2411 (6)	First 30 nanoseconds
1 MHz	20 nanoseconds	C2416 (11) R2416 (12) R2519 (13)	First 10 nanoseconds
1 MHz	20 nanoseconds	C2418 (9) R2418 (10)	First 5 nanoseconds
1 MHz	5 nanoseconds	C2456 (14)	First 2 nanoseconds
Adjust C2469 (located off the board) for minimum overall aberrations, 20 nanoseconds/division.			

http://manoman.mghill.com

s. Remove the signal standardizer from the left vertical compartment and install it into the right vertical compartment.

t. Set the VERT MODE to RIGHT.

u. CHECK—For optimum square leading corner and flat top on the displayed pulse with aberrations not to exceed the limits listed in step e. Use the sweep rate and Rep Rate settings as listed in steps a through r.

v. ADJUST—If necessary, compromise the adjustments in steps a through r to obtain the best response for both left and right vertical compartments.

NOTE

C2456 should be adjusted for least aberration of the front corner. Then, as a final adjustment, the leading corner of the six-division trace should be vertically centered on the graticule and C2456 re-adjusted to obtain a peak-to-peak aberration of exactly 0.2 division on the front corner. The trace should be repositioned to check that the aberrations are within specifications over the graticule area.

6. Check Bandwidth

a. Install the signal standardizer in the left vertical compartment. Set the Test switch for Vert or Horiz Freq Resp and turn the Amplitude control fully clockwise.

b. Set the VERT MODE to LEFT.

c. Connect the medium-frequency signal generator to the CW In connector of the signal standardizer.

d. Set the time-base unit for auto triggering at a sweep rate of five microseconds/division.

e. Set the signal generator to a reference frequency of three megahertz and adjust the output for an eight-division display.

f. Adjust the signal standardizer Position control to bring the top of the waveform down one division.

g. Adjust the amplitude of the signal generator to bring the top of the waveform back up to the top graticule line.

h. Adjust the signal standardizer Position and Amplitude controls to obtain a centered, six-division display. THE CW LEVELED LIGHT MUST STAY ON FOR THIS CHECK.

i. Set the signal generator to cover a range to 100 megahertz.

j. CHECK—That the 7633 display amplitude does not drop below 4.5 divisions as the signal generator frequency is adjusted upward to exactly 100 megahertz. (The signal standardizer CW Leveled light must be on.)

k. Set the VERT MODE to RIGHT.

l. Remove the signal standardizer from the left vertical compartment and install it in the right vertical compartment.

m. Repeat steps c through j for the right vertical compartment.

http://manoman.sqhill.com

7. Check Channel Isolation

a. Install an amplifier unit in the right vertical compartment.

b. Set the VERT MODE and TRIG SOURCE for RIGHT.

c. Connect the medium-frequency signal generator to the input of the vertical amplifier unit. Set the generator for 100-megahertz output and adjust the amplitude for an eight-division display. Set the time-base unit for 0.5 microsecond/division sweep rate.

d. Set the VERT MODE to LEFT.

e. CHECK—For a display of 0.1 division or less while adjusting the signal generator frequency from 100 megahertz to 50 megahertz. Do not include the trace width (line thickness) in this measurement.

f. Interchange the amplifier unit and the signal standardizer. Leave the signal generator connected to the amplifier unit.

g. Set the TRIG SOURCE for LEFT and adjust the amplitude for an eight-division display of the 100-megahertz input signal.

h. Set the VERT MODE to RIGHT.

i. Repeat step e.

j. Set the VERT MODE to LEFT and disconnect the signal generator.

8. Check BEAMFINDER Operation

a. Set the position controls on the amplifier and time-base units clockwise.

b. Press the BEAMFINDER pushbutton.

c. CHECK—That the trace is within the graticule area.

d. Set the position controls on the amplifier and time-base units counterclockwise and repeat steps b and c.

9. Check Vertical Modes

a. Connect the calibrator, four-volt output to the inputs of both the amplifier unit and the signal standardizer (Aux In). Set the signal standardizer Test switch for Aux In.

b. Set the time-base unit for auto, internal triggering, at a sweep rate of 0.5 millisecond/division.

c. Adjust the amplitude of the signal standardizer for two divisions of display and position the trace on the second and fourth graticule lines.

d. Set the VERT MODE and TRIG SOURCE to RIGHT.

e. Set the amplifier unit for about two divisions vertical deflection and position the trace on the sixth and eighth graticule lines.

http://mem0mar.sqhill.com

f. Set the TRIG SOURCE to VERT MODE and the VERT MODE to ALT.

g. CHECK—That traces from both vertical compartments appear on the crt.

h. Set the VERT MODE to ADD.

i. CHECK—That the resultant trace is the algebraic sum of the two vertical signals. For example, if the traces in steps c and e were exactly two divisions each, the resultant trace will be exactly four divisions.

j. Set the VERT MODE to ALT and disconnect the calibration cables.

k. Position the traces about two divisions apart.

l. Set the sweep rate to 50 milliseconds/division.

m. CHECK—That the two vertical traces are alternately displayed with sweeps.

n. Set VERT MODE to CHOP.

o. CHECK—That two separate traces appear simultaneously on the crt.

p. Disconnect all test equipment and remove plug-in units.

D. HORIZONTAL DEFLECTION SYSTEM

Equipment Required:

1. Test oscilloscope
2. 10X probes (2)
3. Signal standardizer
4. Low-frequency signal generator
5. BNC cables (2)
6. BNC T connector
7. Time-mark generator
8. Amplifier unit

Before you begin, see ADJUSTMENT LOCATIONS in the Diagrams section.

http://manoman.sqhill.com

Control Settings

Preset the 7633 controls as follows:

INTENSITY	Midrange
READOUT INTENSITY	Off
VERT MODE	LEFT
TRIG SOURCE	VERT MODE
Storage Selection	NON STORE
REDUCED SCAN	Off

1. Adjust Limit Center

a. Install an amplifier unit, set for a vertical deflection factor 10 millivolts/division with dc coupling, into the horizontal compartment of the 7633. Set the Position control to center range.

b. Set the test oscilloscope for a 10-microsecond sweep rate with auto, ac-coupled, internal triggering. Set the vertical deflection factor for 0.5 volt/division (5 volts/division at probe tip) on both channel inputs, alternate display mode, and set the inputs to ground.

c. Connect 10X probes from the two vertical channel inputs of the test oscilloscope to the two horizontal deflection plate leads of the 7633 (see Figure 8-20).

d. Adjust the vertical Position controls of the test oscilloscope to set both traces on the top graticule line.

e. Set the test oscilloscope vertical inputs to dc.

f. Connect the low-frequency signal generator to the input of the amplifier unit.

g. Set the signal generator for 50-kilohertz output with 0.5 volt amplitude.

h. ADJUST—R535 to bring the lower edges of the two traces to the same level.

i. Disconnect the signal generator and remove the amplifier unit from the horizontal compartment.

2. Adjust Horizontal Gain

a. Install a time-base unit in the left vertical compartment and the signal standardizer in the horizontal compartment.

b. Set the signal standardizer Test switch to Vert or Horiz Gain and adjust the Position control to center the display.

c. ADJUST—Horizontal Gain adjustment R512 (see Figure 8-20) for exactly eight divisions between the second and eighth trace.

3. Adjust DC Balance

a. Set the signal standardizer Test switch to Triggering Gain.

b. ADJUST—DC Balance adjustment R525 (see Figure 8-20) to set the trace exactly on the center graticule line.

http://manoman.sqhill.com

4. Check Horizontal Linearity

a. Set the signal standardizer Test switch to Vert or Horiz + Step Resp. Adjust the Amplitude and Position controls for a centered, two-division display.

b. CHECK—That there is 0.1 division or less compression or expansion when the trace is positioned anywhere within the graticule area.

5. Transient Response

a. Set the signal standardizer Test switch to Vert or Horiz – Step Resp and set the Rep Rate to 1 megahertz.

b. Connect the signal standardizer Trig Out directly to the time-base unit Ext Trig In connector.

c. Set the time-base unit for external triggering, negative slope, with a sweep rate of 0.1 microsecond/division.

d. Set the signal standardizer Amplitude and Position controls for a centered, six-division display.

e. ADJUST—High-Frequency Compensation capacitors C588, C566, and C586 (see Figure 8-20) for optimum flat front corner (see Figure 5-5).

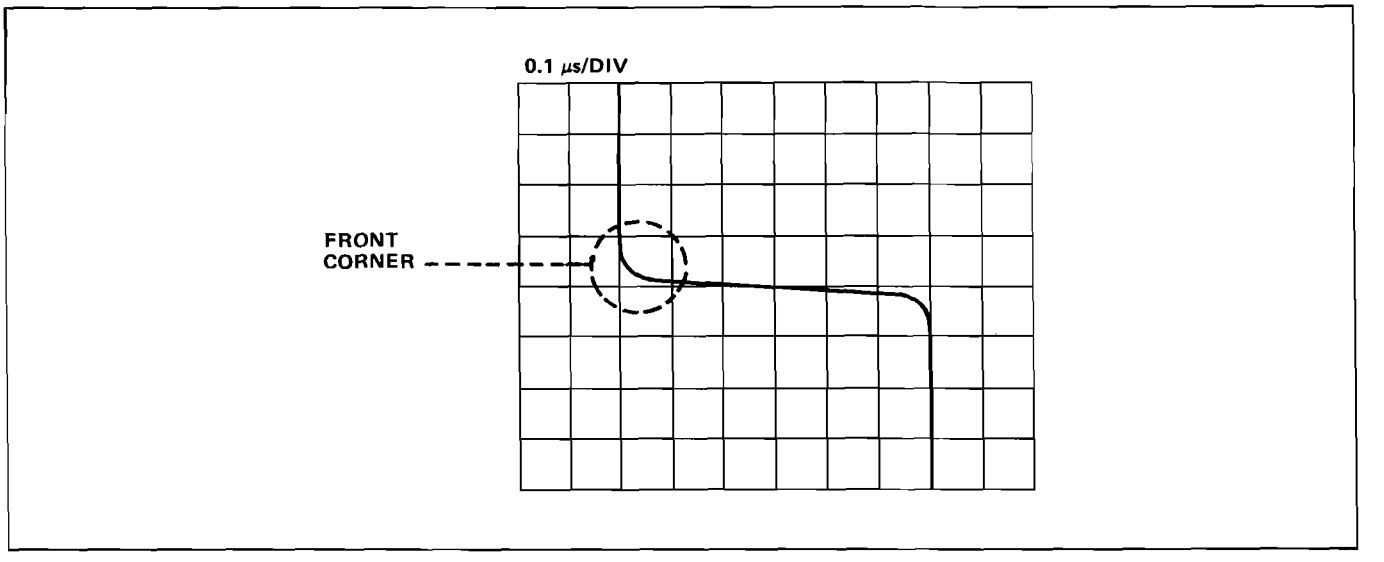

Figure 5-5. Typical display showing front corner of waveform for Horizontal system high-frequency compensation adjustment.

6. Adjust High-Frequency Timing

a. Install an amplifier unit in the left vertical compartment and a time-base unit in the horizontal compartment.

b. Connect the time-mark generator to the input connector of the amplifier unit.

c. Set the time-mark generator for one-millisecond markers. Set the deflection factor of the amplifier unit so the markers are at least two divisions in amplitude.

d. Set the time-base unit for auto, internal triggering at a sweep rate of one millisecond/division.

e. Position the first marker to the left vertical line of the graticule.

f. Set the time-base unit Swp Cal adjustment for one marker each major graticule division between the first and ninth lines.

g. Set the time-mark generator for 10-nanosecond markers.

h. Set the time-base unit for a sweep rate of 0.05 microsecond/division with the X10 magnifier on; set the deflection factor of the amplifier unit so the amplitude of the markers is about two divisions.

i. Pull the REDUCED SCAN switch on.

j. CHECK—That the deflection does not limit on screen.

k. Push the REDUCED SCAN switch off.

l. CHECK—Crt display for one marker for each two divisions over the center eight divisions. Refer to the time-base unit instruction manual for performance check or calibration procedures for checking high-frequency timing and linearity. Use the procedures and limits given for the three fastest sweep rates which do not exceed five nanoseconds/division.

http://manuals.sqhill.com

m. ADJUST—C588, C566, and C586 (see Figure 8-20), if necessary, for one marker for each two divisions over the center eight divisions (use low-capacitance screwdriver).

n. Remove the amplifier and time-base units.

7. Check X-Y Phase Shift

a. Install identical amplifier units in the left vertical and horizontal compartments.

b. Set both amplifier units for 10 millivolts/division deflection with dc coupling.

c. Connect the low-frequency signal generator to the inputs of both amplifier units.

d. Set the low-frequency generator for an output of 35 kilohertz and adjust the amplitude for a horizontal and vertical deflection of eight divisions.

e. CHECK—The lissajous display for an opening at the center vertical line of 0.28 division or less (indicates two degrees or less of phase shift; see Figure 5-6).

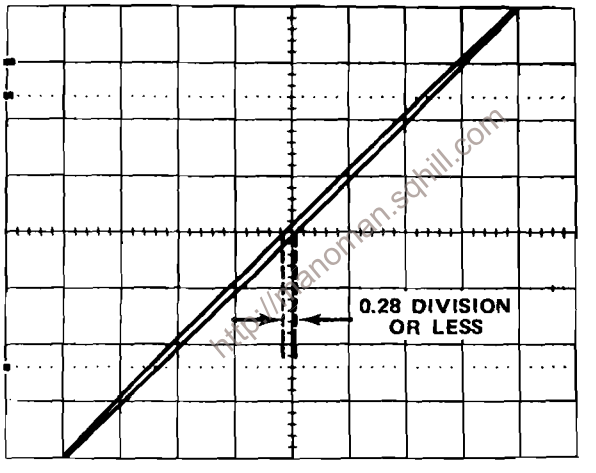

Figure 5-6. Typical crt display when checking X-Y phase shift.

f. Disconnect the low-frequency signal generator and remove the amplifier unit from the left vertical compartment.

8. Check Horizontal Bandwidth

a. Install a time-base unit in the left vertical compartment.

b. Set the time-base unit for auto triggering at a sweep rate of one millisecond/division (display will free-run).

c. Connect the low-frequency generator to the input of the amplifier unit in the horizontal compartment and adjust the amplitude and deflection factor for eight divisions of horizontal display of a 50-kilohertz reference frequency.

d. Without changing the output amplitude, increase the output frequency of the generator to two megahertz.

e. CHECK—That the horizontal amplitude is at least 5.6 divisions (amplitude is typically greater than seven divisions at two megahertz).

f. Disconnect all test equipment and remove the plug-in units from the 7633.

http://manoman.sqhill.com

E. CALIBRATOR

Equipment Required:

1. Precision dc voltmeter
2. Amplifier unit
3. Time-base unit
4. BNC to pin-jack cable
5. Three-inch screwdriver

Before you begin, see ADJUSTMENT LOCATIONS in the Diagrams section.

Control Settings

Preset the 7633 controls as follows:

INTENSITY	Midrange
VERT MODE	LEFT
TRIG SOURCE	VERT MODE
Display Selection	NON STORE
READOUT INTENSITY	Off (in detent)
REDUCED SCAN	Off (pressed in)

http://manuals.tequipment.com

1. Adjust Calibrator Output Voltage

a. Change jumper P1440 (see Figure 5-7) to the DC position.

b. Connect the precision dc voltmeter between the 4 V and GND pin-jacks.

c. CHECK—Meter reading; four volts ±0.04 volt (within ±0.08 volt if this measurement is made outside the +15°C to +35°C range).

d. ADJUST—Four volts adjustment R1459 (see Figure 5-7) for a meter reading of exactly four volts.

e. Connect the precision dc voltmeter between the 0.4-volt Calibrator pin-jack and pin ground.

f. CHECK—Meter reading; 0.4 volt ±0.004 volt (within 0.008 volt if this measurement is made outside the +15°C to +35°C range).

g. Connect the precision dc voltmeter between the 40-millivolt Calibrator pin-jack and pin ground.

h. CHECK—Meter reading; 40 millivolts ±0.4 millivolt (within 0.8 millivolt if this measurement is made outside the +15°C to +35°C range).

i. Disconnect the precision dc voltmeter.

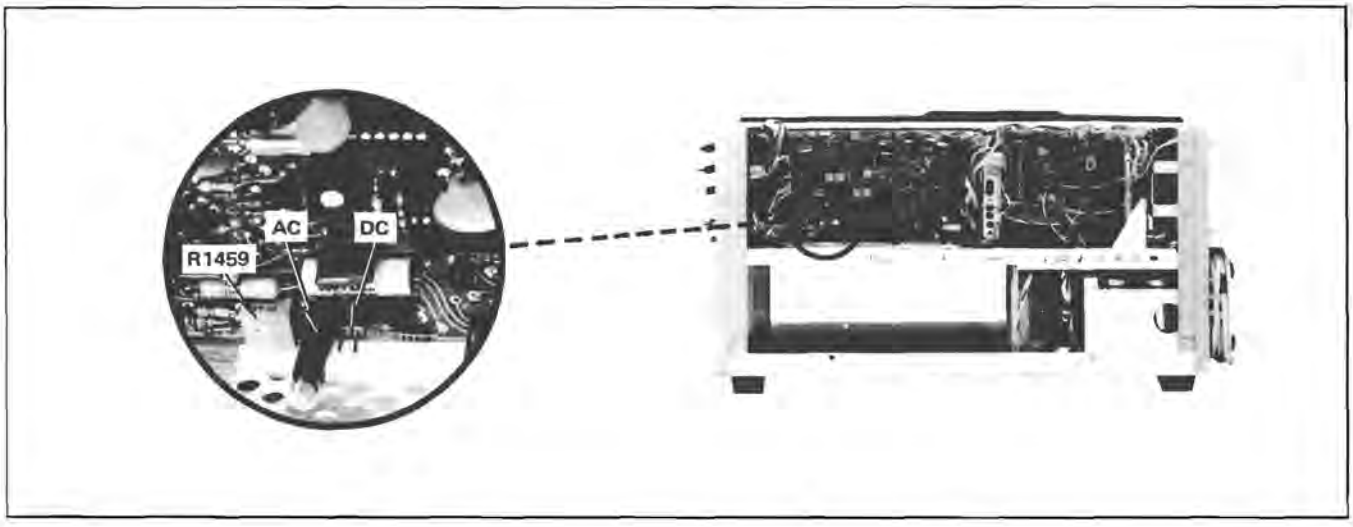

Figure 5-7. Location of Calibrator AC/DC jumper.

http://mb.boman.sqhill.com

2. Check Calibrator Repetition Rate

a. Change jumper P1440 to the AC position (see Figure 5-7).

b. Install the amplifier unit in the left vertical compartment and the time-base unit in the horizontal compartment.

c. Set the amplifier unit for a deflection factor of one volt/division.

d. Set the time-base unit for auto, internal triggering at a sweep rate of 0.2 millisecond/division.

e. Connect the four-volt calibrator pin-jack to the input of the amplifier unit with the BNC to pin-jack cable.

f. Position the start of the square wave to the left line of the graticule.

g. CHECK—Crt display for length of one complete cycle between 4.2 and 6.3 divisions (one kilohertz ±20%).

F. SIGNALS IN/OUT

Equipment Required:

1. Amplifier units (two)
2. Time-base unit
3. Dc voltmeter
4. BNC to pin-jack cable
5. Test oscilloscope
6. 50-ohm BNC cable

Before you begin, see ADJUSTMENT LOCATIONS in the Diagrams section.

Control Settings

Preset the 7633 controls as follows:

INTENSITY	Midrange
VERT MODE	LEFT
TRIG SOURCE	VERT MODE
Display Selection	NON STORE
READOUT INTENSITY	Off (in detent)
REDUCED SCAN	Off (pressed in)

http://manuman.sqhill.com

1. Check SS READY OUT—REMOTE ERASE

a. Connect the calibrator signal to the input of the amplifier unit. Obtain a triggered display of two or more divisions.

b. Press the STORE and VAR PERSIST pushbuttons.

c. CHECK—That when the REMOTE ERASE input connector is grounded, an erase cycle is generated.

d. Press the NON STORE pushbutton.

2. Check EXT SS RESET IN

a. Set the time-base unit to Single Sweep at a sweep rate of 0.5 second/division.

b. CHECK—That when the EXT SS RESET IN input is grounded, the time-base unit single sweep function is reset.

3. Check VERT SIG OUT

a. Set the time-base unit for auto triggering and adjust the trigger level for a stable display at a sweep rate of 1 millisecond/division.

b. Connect a BNC cable to the VERT SIG OUT connector and to the amplifier unit in the right vertical compartment. Set TRIG SOURCE to LEFT.

c. Connect the 0.4-volt CALIBRATOR signal to the input of the amplifier unit in the left vertical compartment. Set both vertical amplifiers for a deflection factor of 0.2 volt/division.

d. CHECK—That a two-division signal is displayed by the left vertical amplifier.

e. Set VERT MODE to RIGHT and check that a signal of about five divisions is displayed by the right vertical amplifier.

f. Interchange the connections to the vertical amplifiers. Set the TRIG SOURCE to RIGHT.

g. CHECK—That a two-division signal is displayed by the right vertical amplifier.

h. Set the VERT MODE to LEFT and check that a signal of about five divisions is displayed.

i. Install a 50-ohm termination between the cable and the input of the ~~right~~ LEFT vertical amplifier.

j. Set the deflection factor of the left vertical to 100 millivolts/division. Check for a display of about five divisions.

k. Disconnect all cables.

http://manoman.sqhlr.com

4. Check + SAWTOOTH OUT

a. Connect the + SAWTOOTH OUT to the input of the left vertical amplifier. Set the deflection factor of the left vertical amplifier for two volts/division.

b. CHECK—For a sawtooth display of about five divisions in amplitude and greater than 10 centimeters in length.

5. Check + GATE OUT

a. Connect the + GATE OUT to the vertical input of the test oscilloscope and set the deflection factor for two volts/division. Set the time/division switch to 1 millisecond/division. Set the GATE selector switch to the MAIN GATE position.

b. CHECK—That displayed signal is about five divisions in amplitude.

G. READOUT OPERATION

(Option 1 deletes this procedure)

Equipment Required:

1. Dual-trace vertical plug-in unit
2. Time-base unit
3. Three-inch screwdriver

Before you begin, see ADJUSTMENT LOCATIONS in the Diagrams section.

Control Settings

Preset the 7633 controls as follows:

INTENSITY	Midrange
READOUT INTENSITY	Midrange
VERT MODE	CHOP
TRIG SOURCE	VERT MODE
Storage Selection	NON STORE
REDUCED SCAN	Off (pressed in)

1. Check READOUT Operation

a. Install the amplifier unit, set for dual trace mode, in the left vertical compartment. Push and hold the identify buttons on the amplifier unit. (Switch S2110 should be in the free position.) Check that the word IDENTIFY is within the top division and the bottom division of the graticule. Check that the words IDENTIFY are positioned within the left third of the graticule. Check completeness of characters without over-scanning (over-scanning causes a bright dot where the traces overlap).

http://manuals.hill.com

b. ADJUST—Vertical Separation adjustment R2291 (see Figure 8-21) so the channel 1 characters are within the top division, and the channel 2 characters are within the bottom division of the graticule.

c. ADJUST—Character height adjustment R2273 (see Figure 8-21) as needed. Characters are typically 0.5 division in height.

d. ADJUST—Character scan adjustment R2128 (see Figure 8-21) if characters are over-scanned.

e. Remove the amplifier unit from the left vertical and install it in the right vertical compartment. Push and hold the identify buttons on the amplifier unit. Check that the words IDENTIFY are positioned within the center third of the graticule.

f. Remove the amplifier unit from the right vertical and install it in the horizontal compartment. Push and hold the identify buttons on the amplifier unit. Check that the words IDENTIFY are positioned within the right third of the graticule.

g. CHECK—That the correct characters are displayed.

h. ADJUST—Row Match adjustment R2183 (see Figure 8-21) and Column Match adjustment R2214, if necessary, for correct readout display.

i. Remove the dual trace plug-in unit.

2. Check Readout Gate Trig'd Operation

a. Set switch S2110 to Gate Trig'd position (see Figure 8-21).

b. Install the time-base unit in the horizontal plug-in compartment. Set sweep rate to one second/division.

c. CHECK—That no readout information is displayed till after the sweep. At fast sweep rates, this is not noticeable.

http://manoman.sqhill.com

H. STORAGE SYSTEM

Equipment Required:

1. Digital voltmeter (DVM)
2. 100X probe
3. Test oscilloscope
4. Low-frequency signal generator
5. Medium-frequency signal generator
6. 10X probe
7. 50-ohm BNC cables (two)
8. Amplifier unit
9. Time-base unit
10. Three-inch screwdriver

Before you begin, see ADJUSTMENT LOCATIONS in the Diagrams section.

http://manoman.sqhill.com

Control Settings

Preset the 7633 controls as follows:

VERT MODE	LEFT
TRIG SOURCE	VERT MODE
INTENSITY	CCW (off)
READOUT INTENSITY	Off (in detent)
Display Selection	NON STORE
ERASE/PERIODIC	CCW (in detent, off)
PERSISTENCE	CCW (maximum)
Storage Selection	BI STABLE
SAVE INTENSITY	CW
STORAGE LEVEL	CW

1. Check NON STORE Voltage Levels

a. Install a time-base unit in the horizontal compartment of the 7633 and an amplifier unit in the left vertical compartment.

b. Set the time-base unit for auto, ac-coupling, and line source at a sweep rate of 0.2 millisecond/division.

c. Set the amplifier unit for 0.5 volt/division vertical deflection and dc coupling.

d. Check the dc levels on the following test points (see Figure 8-24) with the DVM:

Front Mesh	More negative than −12 volts
Fast Mesh	125 volts ±4 volts
Collector	150 volts ±6 volts
CE 3	65 volts ±5 volts
CE 2	45 volts ±2 volts
CE 1	70 volts ±3 volts
FGA	36 volts ±1.5 volts
FGK	At least one volt but not more than three volts above FGA

2. Check BISTABLE Voltage Levels

a. Press the STORE pushbutton.

b. Check the dc levels on the following test points with the DVM:

Front Mesh	Adjustable from 45 volts to 95 volts with R1689. Preset to 70 volts.
Fast Mesh	125 volts ±5 volts
Collector	150 volts ±6 volts
CE 3	85 volts ±5 volts
CE 2	85 volts ±5 volts
CE 1	45 volts ±2.5 volts
FGA	36 volts ±3 volts
FGK	0 volts (approximately)

http://manoman.sqhill.com

c. Connect the DVM to CE 1.

d. Press the ERASE pushbutton.

e. Measure 85 volts ±4 volts during the erase cycle.

f. Remove the DVM probe from CE 1 and connect it to FGA.

g. Press the ERASE pushbutton.

h. Measure 90 volts ±4 volts during the erase cycle.

i. Disconnect the DVM.

3. Check BISTABLE ERASE Waveforms

a. Set the time-base unit for single sweep.

b. Connect a 100X probe from the test oscilloscope to the Front Mesh test point.

c. Adjust the test oscilloscope for a sweep rate of 100 milliseconds/division and a vertical deflection of one volt/division (100 volts/division at probe tip).

d. Press the ERASE pushbutton.

e. Check for a 100-millisecond, approximately 600-volt erase pulse. At the end of the erase pulse, the level should drop below zero volts and ramp up to the Op Level in less than 375 milliseconds (see Figure 5-8).

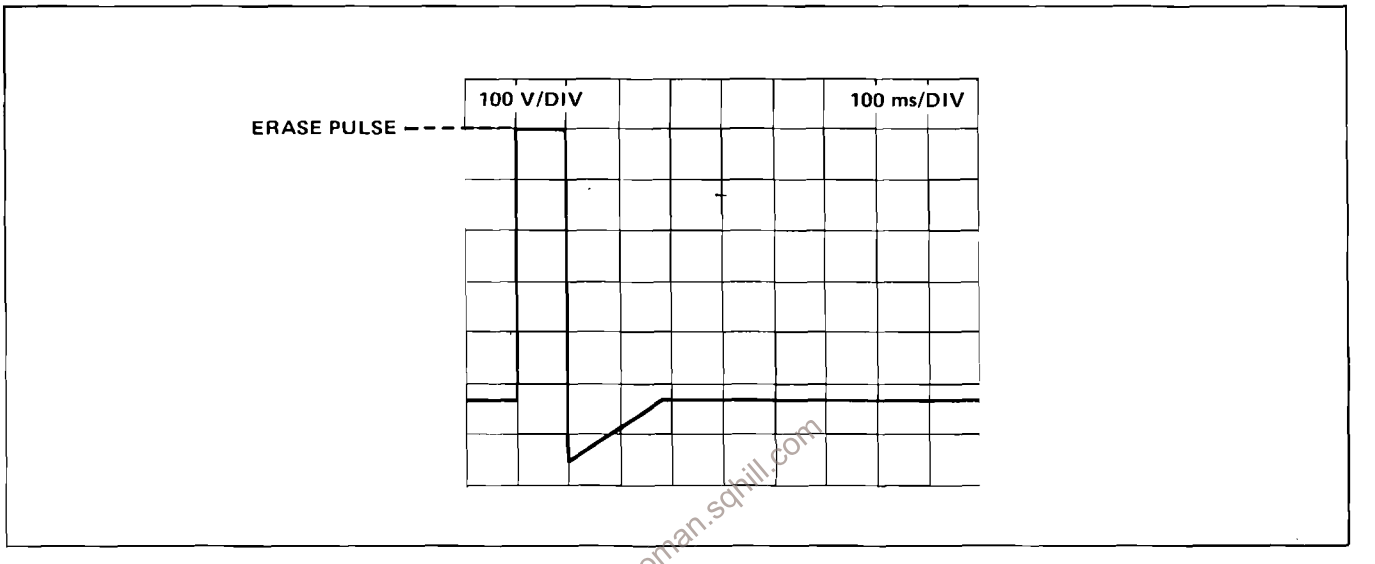

Figure 5-8. Idealized Erase waveform.

http://manoman.sqhill.com

f. Press the FAST pushbutton (on).

g. Press the ERASE pushbutton.

h. Check for the same waveform as in step e but with a 100-millisecond, 600-volt transfer pulse approximately one second after the erase pulse (see Figure 5-9).

i. Turn the READOUT INTENSITY on.

j. Press the ERASE pushbutton.

k. Check that the readout display is off during the erase cycle.

l. Turn off the READOUT INTENSITY.

m. Set the time-base unit in the 7633 for auto, ac-coupled, internal triggering.

n. Press the FAST pushbutton (off).

o. Remove the 100X probe from the Front Mesh test point and adjust the INTENSITY for a usable display.

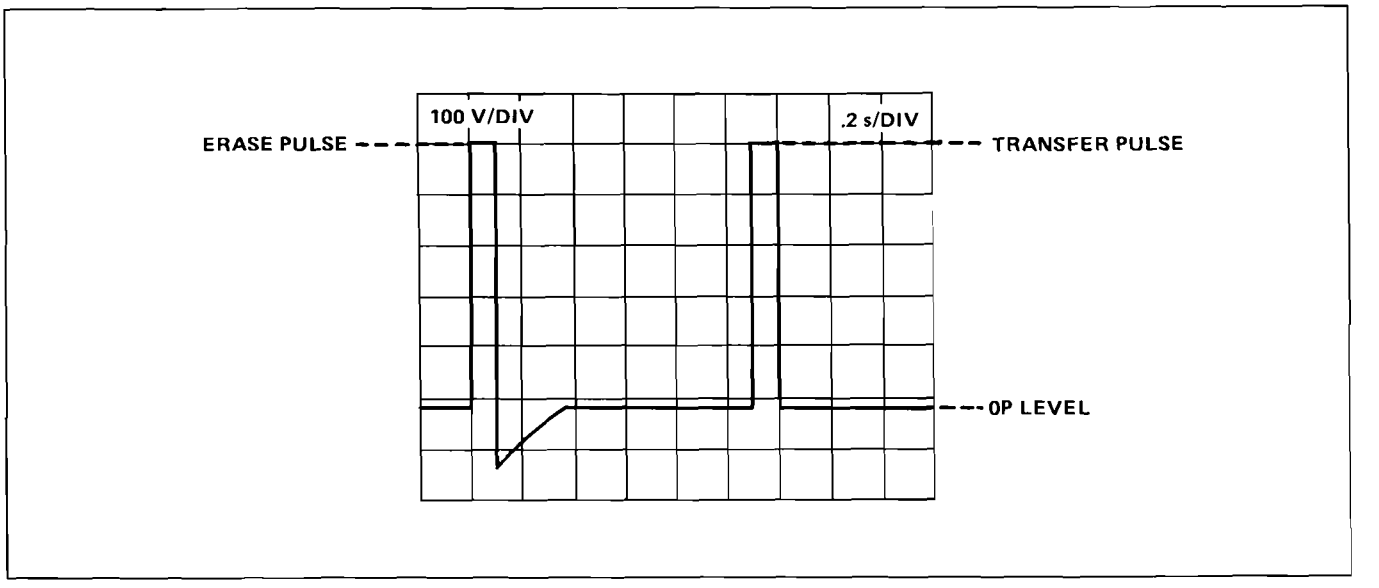

Figure 5-9. Idealized Erase and Transfer waveform.

p. Press the ERASE pushbutton.

q. Check that the trace is blanked during the erase cycle.

4. Adjust BISTABLE Op Level and check BISTABLE Writing Speed

a. Press NON STORE.

b. Connect the low-frequency signal generator to the amplifier unit in the 7633 and adjust for 6.4 divisions display of a 1.5-kilohertz signal.

c. Set the time-base unit for single sweep at a sweep rate of 0.5 millisecond/division.

d. Adjust INTENSITY to maximum without blooming trace.

e. Connect the DVM to the Front Mesh test point.

f. Press STORE.

g. Adjust Bistable Op Level adjustment (see Figure 8-24) R1689 (1) toward zero volts while erasing until part of the stored waveform starts to fade out after approximately 15 seconds.

h. Note the dc level. This is the lower writing threshold.

i. Adjust Bistable Op Level adjustment R1689 (1) toward +100 volts while erasing until part of the stored waveform begins to fade up (blend into the background) after about 15 seconds.

j. Note the dc level. This is the upper writing threshold.

k. ADJUST—The Bistable Op Level adjustment R1689 (1) to a voltage setting midway between the upper and lower writing thresholds. This is the Bistable Op Level.

http://manonline.sqhill.com

l. CHECK—That a single-shot, 1.5-kilohertz, 6.4-division sine wave, positioned up and down the screen (while erasing and single sweeping), will store anywhere within the center 6 x 8 divisions of the graticule area without fading up or down in one minute. This checks the Bistable writing speed at .03 division/microsecond.

m. Remove the DVM.

n. Set the time-base unit for X10 magnification, auto triggering.

o. Pull REDUCED SCAN switch on.

p. Adjust the low-frequency signal generator for a display of 6.4 Reduced Scan divisions of a 10-kilohertz signal (writing speed 0.2 division/microsecond).

q. Set the time-base unit for single sweep.

r. Press STORE.

s. CHECK—That the 10-kilohertz signal will store in the center 8 x 10 divisions of the Reduced Scan graticule area and will not fade up or down in one minute.

t. Push REDUCED SCAN off.

u. Set INTENSITY control to midrange.

v. Set time-base unit magnifier to X1.

http://manoman.sqhill.com

5. Check PERIODIC ERASE

a. Set the time-base unit for auto, ac-coupled, internal triggering.

b. Turn the PERIODIC ERASE control fully clockwise (minimum view time).

c. Set the test oscilloscope for dc input, 0.1 volt/division (one volt/division at probe tip) vertical deflection and 0.5 second/division sweep rate with auto, ac-coupled, internal triggering.

d. Connect the 10X probe from the test oscilloscope to the + end of C1517.

e. CHECK—For a ramp time of less than two seconds.

f. Set the test oscilloscope sweep rate to five seconds/division.

g. Turn the PERIODIC ERASE control fully counterclockwise (maximum view time) but do not turn into detent.

h. CHECK—For a ramp time of more than 10 seconds.

i. Disconnect probe and turn off PERIODIC ERASE (in detent).

6. Check SAVE Mode and SAVE INTEN

a. Set the time-base unit for single sweep and set the level control counterclockwise (untriggered).

b. Turn the READOUT INTENSITY to midrange.

c. Push the ERASE pushbutton.

d. Turn SAVE INTEN control fully counterclockwise.

e. Push the SAVE pushbutton.

f. CHECK—That the screen does not change. (This is the "Babysitting Mode".)

g. Turn the level control on the time-base unit to trigger a sweep.

h. CHECK—That the screen goes dark and that the readout is visible for a short time afterwards then turns off.

i. Connect a 10X probe from the test oscilloscope to the FGK test point.

j. Set the test oscilloscope for dc input and 0.5 volt/division (5 volts/division at probe tip) vertical deflection at a sweep rate of two milliseconds/division.

k. Set the ground reference on the bottom graticule line of the test oscilloscope.

l. CHECK—For a dc level of 37 volts ±3 volts.

m. Turn the SAVE INTEN control slowly clockwise.

n. CHECK—That as the SAVE INTEN control is turned, a 100-hertz pulse to zero volts appears and increases to approximately 90% duty cycle at the clockwise end of the control.

o. Remove the 10X probe.

7. Check VAR PERSIST Voltage Levels

a. Set the time-base unit for auto triggering.

b. CHECK—That the sweep is locked out (the 7633 is still in the SAVE mode from the previous part).

c. Press the STORE pushbutton.

d. CHECK—That the sweep appears.

e. Turn the INTENSITY off.

f. Turn the READOUT INTENSITY off (in detent).

http://hanoman.sqhn.com

g. Press the VAR PERSIST pushbutton and measure the voltages on the following test points with the DVM.

FAST MESH	100 volts ±4 volts
COLL	100 volts ±4 volts
CE 3	65 volts ±4 volts
CE 2	45 volts ±2 volts
CE 1	30 volts ±1.5 volts
FGA	20 volts ±1 volt
FGK	0 volt ±0.5 volt

h. Measure the voltages on the following test points during erase:

Test Point	Normal	During Erase
FAST MESH	100 volts	125 volts ±3 volts
COLL	100 volts	132 volts ±3 volts
CE 1	30 volts	68 volts ±3 volts
FGA	20 volts	74 volts ±3 volts

8. Adjust VAR PERSIST Op Level and Prep Level

a. Set the test oscilloscope for 0.1 volt/division (1 volt/division at probe tip) vertical deflection, ac input, and 0.1 millisecond/division sweep rate.

b. Connect a 10X probe from the test oscilloscope to the Front Mesh of the 7633.

c. Turn the STORAGE LEVEL fully clockwise.

d. CHECK—For a 10-kilohertz, approximately two-volt ramp on the front mesh (see Figure 5-10).

http://manoman.mcgraw-hill.com

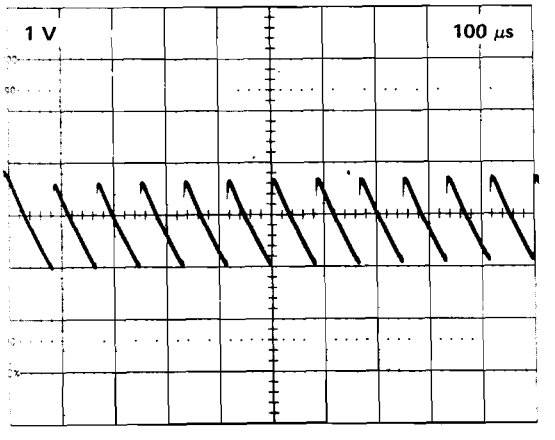

Figure 5-10. VAR PERSIST Front Mesh ramp.

e. Set the test oscilloscope amplifier unit for dc input, 0.5 volt/division (5 volts/division at probe tip) vertical deflection, and a sweep rate for one millisecond/division.

f. Adjust Variable Persistence Op Level adjustment R1658 for +15 volts ± .0 volt on the front mesh.

g. Adjust the Variable Persistence Prep Level adjustment R1677 (4), during the erase cycle, for no change in voltage on the front mesh during the erase cycle. (Disregard the 600-volt, 100-millisecond pulse at the beginning of the erase cycle.)

h. ADJUST—The Variable Persistence Op Level R1658 (3) as follows:

Push the ERASE pushbutton and observe the dark or shaded areas of the screen. . .

> If the screen is bright with no dark or shaded areas, increase the VP Op Level adjustment R1658 (3) to minus nine volts.
>
> If dark or shaded areas are noticeable, increase the VP Op Level adjustment R1658 (3) by one or two volts, erase, and observe screen. Repeat until a voltage is reached where the screen is bright with no shaded areas. Adjust R1658 to three volts above this voltage. (Final voltage must not be more negative than minus nine volts).

i. Adjust the Variable Persistence Prep Level adjustment R1677 (4) so that the screen is dark after an erase cycle.

http://manuals.sqhill.com

j. ADJUST—VP Prep Level adjustment R1677 (4) to decrease the voltage (in approximately one-volt steps) to the point where, after an erase cycle, approximately 80% of the screen has a light green background.

k. CHECK—That the Variable Persistence Op Level drops approximately five volts as the STORAGE LEVEL control is turned counterclockwise.

l. Turn the STORAGE LEVEL control fully clockwise.

9. Check Persistence Pulses

a. Turn the PERSISTENCE control fully clockwise.

b. CHECK—For a pulse, the same amplitude as the prep pulse, 1.2 milliseconds to 2.2 milliseconds wide riding on the VP Op Level (see Figure 5-11).

c. CHECK—For 7.5 to 12.5 milliseconds between leading edges (100-hertz repetition rate).

d. Press the SAVE pushbutton.

e. CHECK—That the persistence pulses stop.

f. Press the ERASE pushbutton.

g. CHECK—That the erase waveform does not occur.

h. Press the STORE pushbutton.

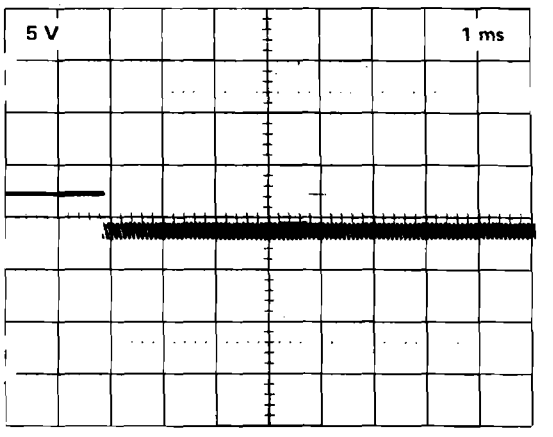

Figure 5-11. PERSISTENCE pulses.

i. Set the test oscilloscope sweep rate to five microseconds/division.

j. Turn the PERSISTENCE control slowly counterclockwise and check that the persistence pulse decreases to less than 15 microseconds near the counterclockwise end of the control and disappears at the counterclockwise end.

k. Remove the 10X probe and press the NON STORE pushbutton.

http://manoman.sqhill.com

10. Check VAR PERSIST Writing Speed

a. Set the time-base unit for a sweep rate of 20 microseconds/division with auto, ac-coupled, internal triggering and set the amplifier unit for dc input.

b. Connect the low-frequency signal generator to the amplifier unit input and adjust the amplitude for 6.4 divisions display of a 25-kilohertz signal (writing speed of 0.5 division/microsecond).

c. Set the INTENSITY to maximum without blooming trace.

d. Set the time-base unit to single sweep.

e. Press the STORE pushbutton.

f. CHECK—That the signal will store (and can be viewed for 30 seconds) in the center 6 x 8 divisions of the graticule area by erasing and repositioning the signal (the PERSISTENCE control is in the counterclockwise position and the STORAGE LEVEL is fully clockwise).

g. Press NON STORE.

h. Set the time-base unit for a sweep rate of 50 microseconds/division with auto triggering and X10 magnification.

i. Pull the REDUCED SCAN switch on.

j. Adjust the low-frequency signal generator for a display of 6.4 Reduced Scan divisions of a 150-kilohertz signal (writing speed of three divisions/microsecond).

k. Set the time-base unit for single sweep.

l. Press the STORE pushbutton.

m. CHECK—That the signal will store (and can be viewed for 30 seconds) in the center 8 x 10 divisions of the Reduced Scan graticule area by erasing and repositioning the signal.

n. Push the REDUCED SCAN switch off.

11. Adjust VAR PERSIST FAST Front Mesh Stability

a. Turn the INTENSITY off and press the FAST pushbutton.

b. Adjust the FAST LEVEL CENTER control fully counterclockwise.

c. Adjust the time-base unit Level control so that the triggered light is off.

d. Press the ERASE pushbutton.

e. Connect the DVM to the following test points and measure the voltage levels:

CE 3	72.5 volts ±4 volts
CE 2	55 volts ±2.5 volts

http://manuals.sqhl.com

f. Disconnect the low-frequency signal generator.

g. Connect the DVM to the Front Mesh test point.

h. Press the ERASE pushbutton (time-base unit should still be set for single sweep and untriggered).

i. Turn the time-base unit Level control to trigger a sweep (transfer sweep).

j. Measure and note the voltage level (Op Level) on the Front Mesh.

k. Set the time-base unit Level control for untriggered sweep (ccw).

l. Press the ERASE pushbutton.

m. ADJUST—VP Fast Stability (waiting level) adjustment R1646 (5) for a voltage level on the Front Mesh, six volts lower than that measured in step j.

n. Turn the time-base unit Level control to trigger a sweep.

o. Press the ERASE pushbutton.

p. Adjust the STORAGE LEVEL control till the screen has a very dim background (in bright light it will be necessary to use a viewing hood).

q. Turn the time-base unit Level control for untriggered sweep (ccw).

r. Press the ERASE pushbutton.

s. After one minute, turn the time-base unit Level control to trigger a sweep.

t. ADJUST—VP Fast Stability as follows: Compare the background transferred up after one minute to that transferred up immediately after the screen is erased when the sweep is triggered. When the backgrounds are the same brightness, the Variable Persistence Front Mesh stability is properly adjusted. . .

If the background is brighter after the waiting period, increase the waiting level by adjusting R1646 (5) a small amount and repeat steps p, q, r, and s to recheck.

If the background is darker after the waiting period, decrease the waiting level by adjusting R1646 (5) a small amount and repeat steps p, q, r, and s to recheck.

u. Remove the DVM.

12. Adjust BISTABLE FAST

a. Press the BISTABLE pushbutton.

b. Set the test oscilloscope for two volts/division (20 volts/division at probe tip) vertical deflection at a sweep rate of two microseconds/division.

c. Connect a 10X probe from the test oscilloscope to the Fast Mesh test point.

d. Turn the 7633 time-base unit Level control for untriggered sweep (time-base unit should still be set for single sweep).

http://manoman.schill.com

e. Press the ERASE pushbutton.

f. ADJUST—Bistable Fast Prep adjustment R1783 (2) for approximately 15 volts on the Fast Mesh test point.

g. CHECK—For pump pulses on the Fast Mesh test point that go from approximately 15 volts to approximately 125 volts. It may be necessary to increase the intensity of the test oscilloscope and trigger on the positive slope.

h. CHECK—That the pulse in step g is of approximately two microseconds duration.

i. Remove the 10X probe.

j. Press the ERASE pushbutton and measure the voltage levels on the following points using the DVM:

COLL	128 volts ±3 volts
CE 3	65 volts ±5 volts
CE 2	45 volts ±2 volts
CE 1	30 volts ±2 volts
FGA	20 volts ±2 volts

k. Connect the DVM to the Collector test point.

l. Press the ERASE pushbutton.

m. CHECK—That the voltage drops to approximately 115 volts during erase cycle.

n. Remove the DVM.

13. Adjust BISTABLE FAST Stability and Writing Speed

a. Press the NON STORE pushbutton.

b. Set the time-base unit for auto triggering and a sweep rate of two microseconds/division.

c. Connect the medium-frequency signal generator to the amplifier unit input and adjust the amplitude for a 6.4-division display of a 2.5-megahertz signal (writing speed is 50 divisions/microsecond).

d. Turn INTENSITY to midrange.

e. Set the time-base unit for single sweep.

f. Turn STORAGE LEVEL fully clockwise.

g. Press the STORE pushbutton.

h. Increase the FAST LEVEL CENTER slightly.

i. Press the ERASE pushbutton.

http://manoman.sqhill.com

j. Repeat steps h and i until the background just begins to fade up (spatter).

k. Press the ERASE pushbutton. Note the quality of the stored trace and background.

l. Set the time-base unit Level control for nontriggered sweep (ccw).

m. Press the ERASE pushbutton.

n. Wait one minute; then, trigger the sweep by turning the Level control. If the stored waveform and background are the same as that obtained in step k, the stability is properly adjusted.

o. If the waveform stored in step n is not the same as that stored in step k, connect the DVM to the Fast Mesh test point and set the time-base unit Level control for nontriggered sweep.

p. If the displayed waveform in step n has faded up, increase the Bistable Fast Prep voltage by adjusting R1783.

q. If the waveform in step n did not store, adjust R1783 to lower the Prep voltage and recheck step n.

r. Turn the STORAGE LEVEL fully counterclockwise.

s. Press the ERASE pushbutton.

t. CHECK—For either poor or no storage.

u. Turn the STORAGE LEVEL control to midrange.

v. Set the time-base unit for auto triggering.

w. CHECK—That multiple traces are stored by repositioning the trace vertically.

x. Set the time-base unit for single sweep.

y. With the STORAGE LEVEL control set at the two o'clock position, ADJUST—the FAST LEVEL CENTER adjustment till the background just begins to fade up.

z. CHECK—That the signal will store over the center 6 x 8 divisions of the graticule area by alternately repositioning and storing the waveform.

14. Check REDUCED SCAN BISTABLE FAST Writing Speed

a. Press the NON STORE pushbutton.

b. Pull the REDUCED SCAN switch on and reduce the INTENSITY.

c. Set the time-base unit for a sweep rate of 0.2 microsecond/division and auto triggering.

d. Set the medium-frequency signal generator for 20 megahertz output and adjust the amplitude for a display of 6.4 REDUCED SCAN divisions (writing speed 400 divisions/microsecond).

e. Set the time-base unit for single sweep.

f. Press the STORE pushbutton.

http://manoman.stores.com

g. CHECK—That the signal can be stored in the center 8 x 10 divisions of the Reduced Scan graticule area.

h. Press REDUCED SCAN off and press the NON STORE pushbutton.

15. Adjust VAR PERSIST FAST

a. Set the time-base unit for auto triggering at a sweep rate of 0.1 microsecond/division.

b. Adjust the medium-frequency signal generator to display 6.4 divisions of a 7.5-megahertz signal (writing speed of 150 divisions/microsecond).

c. Set the time-base unit for single sweep (triggered).

d. Press the VAR PERSIST pushbutton.

e. Press the STORE pushbutton.

f. Set the STORAGE LEVEL control to the two o'clock position.

g. ADJUST—Variable Persistence Fast Level Offset adjustment R1754 (7) to the point where, after an erase cycle, the background just begins to store. (If background does not store, center R1779 and repeat this step.)

h. Turn the INTENSITY to maximum without blooming the trace.

i. ADJUST—The Variable Persistence Fast Prep Level adjustment R1779 (6) so the signal is stored after an erase cycle.

16. Adjust VAR PERSIST FAST Stability and Writing Speed

a. Set the time-base unit Level control for non-triggered sweep (ccw).

b. Press the ERASE pushbutton and wait one minute before triggering a sweep by turning the time-base unit Level control.

c. Compare the trace stored in step b with a trace stored immediately after an erase cycle (time-base unit Level control set for triggered sweep). If both stored waveforms are the same, the Fast Variable Persistence stability is properly set.

d. If the stored waveforms are not the same, connect the DVM to the Fast Mesh test point.

e. Set the time-base unit Level control for nontriggered sweep.

f. Press the ERASE pushbutton and measure the voltage on the Fast Mesh test point (Prep voltage).

g. If the stored waveform (triggered after one minute) fades up, lower the Fast Prep voltage by adjusting R1779 (6). Check by repeating steps a, b, and c.

http://manoman.sqmt.com

h. If parts of the waveform did not store in step c, increase the Fast Prep voltage by adjusting R1779 (6) and check by repeating steps a, b, and c.

i. With the STORAGE LEVEL control set at the two o'clock position, adjust the VP Fast Level Offset adjustment R1754 till the background just begins to store.

j. CHECK—That the signal will store (and can be viewed for 30 seconds) over the center 6 x 8 divisions of the graticule area.

k. Push the NON STORE pushbutton and pull the REDUCED SCAN switch on.

l. Set the time-base unit for 0.1 microsecond/division sweep rate, auto triggering, and X10 magnification.

m. Adjust the medium-frequency signal generator to display 7.1 Reduced Scan divisions of a 100-megahertz signal (writing speed of 2220 divisions/microsecond).

n. Set the time-base unit for single sweep.

o. Press the STORE pushbutton.

p. CHECK—That the waveform will store within the center 8 x 10 divisions of the Reduced Scan graticule area and can be viewed for at least 30 seconds.

q. Press the NON STORE pushbutton and the REDUCED SCAN switch.

r. Disconnect all test equipment. This completes the calibration procedure.

http://manoman.sqhill.com

OPTIONS

The 7633/R7633 Storage Oscilloscope is available with the following options:

OPTION 1

This option deletes the Readout System. Operation of the instrument is unchanged except there is no alpha-numeric display on the crt.

OPTION 3

This option provides electro-magnetic interference (emi) shielding so the instrument will meet the emi specification given in Section 2.

OPTION 5

This option provides a special fan to allow operation from 50 Hertz to 400 Hertz line frequency.

http://manuals.sqhill.com

OPTION 7

This option deletes all rear panel connectors except the Z-AXIS input.

REPLACEABLE ELECTRICAL PARTS

PARTS ORDERING INFORMATION

Replacement parts are available from or through your local Tektronix, Inc. Field Office or representative.

Changes to Tektronix instruments are sometimes made to accommodate improved components as they become available, and to give you the benefit of the latest circuit improvements developed in our engineering department. It is therefore important, when ordering parts, to include the following information in your order: Part number, instrument type or number, serial number, and modification number if applicable.

If a part you have ordered has been replaced with a new or improved part, your local Tektronix, Inc. Field Office or representative will contact you concerning any change in part number.

Change information, if any, is located at the rear of this manual.

http://manomanuals.com

SPECIAL NOTES AND SYMBOLS

X000	Part first added at this serial number
00X	Part removed after this serial number

ITEM NAME

In the Parts List, an Item Name is separated from the description by a colon (:). Because of space limitations, an Item Name may sometimes appear as incomplete. For further Item Name identification, the U.S. Federal Cataloging Handbook H6-1 can be utilized where possible.

ABBREVIATIONS

ACTR	ACTUATOR	PLSTC	PLASTIC
ASSY	ASSEMBLY	QTZ	QUARTZ
CAP	CAPACITOR	RECP	RECEPTACLE
CER	CERAMIC	RES	RESISTOR
CKT	CIRCUIT	RF	RADIO FREQUENCY
COMP	COMPOSITION	SEL	SELECTED
CONN	CONNECTOR	SEMICOND	SEMICONDUCTOR
ELCTLT	ELECTROLYTIC	SENS	SENSITIVE
ELEC	ELECTRICAL	VAR	VARIABLE
INCAND	INCANDESCENT	WW	WIREWOUND
LED	LIGHT EMITTING DIODE	XFMR	TRANSFORMER
NONWIR	NON WIREWOUND	XTAL	CRYSTAL

CROSS INDEX MFR. CODE NUMBER TO MANUFACTURER

	MANUFACTURER	ADDRESS	CITY,STATE,ZIP
00853	SANGAMO ELECTRIC CO., S. CAROLINA DIV.	P. O. BOX 128	PICKENS, SC 29671
01002	GENERAL ELECTRIC CO., INDUSTRIAL AND POWER CAPACITOR PRODUCTS DEPT.	JOHN ST.	HUDSON FALLS, NY 12839
01121	ALLEN-BRADLEY CO.	1201 2ND ST. SOUTH	MILWAUKEE, WI 53204
01295	TEXAS INSTRUMENTS, INC., SEMICONDUCTOR GROUP	P. O. BOX 5012	DALLAS, TX 75222
02735	RCA CORP., SOLID STATE DIVISION	ROUTE 202	SOMERVILLE, NY 08876
03508	GENERAL ELECTRIC CO., SEMI-CONDUCTOR PRODUCTS DEPT.	ELECTRONICS PARK	SYRACUSE, NY 13201
03877	TRANSITRON ELECTRONIC CORP.	168 ALBION ST.	WAKEFIELD, MA 01880
04713	MOTOROLA, INC., SEMICONDUCTOR PRODUCTS DIV.	5005 E. MCDOWELL RD.	PHOENIX, AZ 85036
05624	BARBER-COLMAN CO.	1300 ROCK ST.	ROCKFORD, IL 61101
07263	FAIRCHILD SEMICONDUCTOR, A DIV. OF FAIRCHILD CAMERA AND INSTRUMENT CORP.	464 ELLIS ST.	MOUNTAIN VIEW, CA 94042
07910	TELEDYNE SEMICONDUCTOR	12515 CHADRON AVE.	HAWTHORNE, CA 90250
08806	GENERAL ELECTRIC CO., MINIATURE LAMP PRODUCTS DEPT.	NELA PK.	CLEVELAND, OH 44112
12040	NATIONAL SEMICONDUCTOR CORP.	COMMERCE DRIVE	DANBURY, CT 06810
12697	CLAROSTAT MFG. CO., INC.	LOWER WASHINGTON ST.	DOVER, NH 03820
12954	DICKSON ELECTRONICS CORP.	8700 E. THOMAS RD.	SCOTTSDALE, AZ 85252
12969	UNITRODE CORP.	580 PLEASANT ST.	WATERTOWN, MA 02172
13715	FAIRCHILD SEMICONDUCTOR, A DIV. OF FAIRCHILD CAMERA AND INSTRUMENT CORP.	4300 REDWOOD HWY.	SAN RAFAEL, CA 94903
14099	SEMTECH CORP.	652 MITCHELL ROAD	NEWBURY PARK, CA 91320
14193	CAL-R, INC.	1601 OLYMPIC BlVD.	SANTA MONICA, CA 90404
14752	ELECTRO CUBE INC.	1710 S. DEL MAR AVE.	SAN GABRIEL, CA 91776
14936	GENERAL INSTRUMENT CORP., SEMICONDUCTOR PRODUCTS GROUP	600 W. JOHN ST.	HICKSVILLE, NY 11802
21845	SOLITRON DEVICES, INC., TRANSISTOR DIV.	1177 BLUE HERON BlVD.	RIVIERA BEACH, FL 33404
22526	BERG ELECTRONICS, INC.	YOUK EXPRESSWAY	NEW CUMBERLAND, PA 17070
24931	SPECIALTY CONNECTOR CO., INC.	3560 MADISON AVE.	INDIANAPOLIS, IN 46227
27014	NATIONAL SEMICONDUCTOR CORP.	2900 SAN YSIDRO WAY	SANTA CLARA, CA 95051
50157	N. L. INDUSTRIES, INC., ELECTRONICS DEPT.	P. O. BOX 787	MUSKEGON, MI 49443
56289	SPRAGUE ELECTRIC CO.		NORTH ADAMS, MA 01247
71400	BUSSMAN MFG., DIVISION OF MCGRAW-EDISON CO.	2536 W. UNIVERSITY ST.	ST. LOUIS, MO 63107
71590	CENTRALAB ELECTRONICS, DIV. OF GLOBE-UNION, INC.	5757 N. GREEN BAY AVE.	MILWAUKEE, WI 53201
71707	COTO COIL CO., INC.	65 PAVILION AVE.	PROVIDENCE, RI 02905
72982	ERIE TECHNOLOGICAL PRODUCTS, INC.	644 W. 12TH ST.	ERIE, PA 16512
73138	BECKMAN INSTRUMENTS, INC., HELIPOT DIV.	2500 HARBOR BlVD.	FULLERTON, CA 92634
75042	TRW ELECTRONIC COMPONENTS, IRC FIXED RESISTORS, PHILADELPHIA DIVISION	401 N. BROAD ST.	PHILADELPHIA, PA 19108
76493	BELL INDUSTRIES, INC., MILLER, J. W., DIV.	19070 REYES AVE.	COMPTON, CA 90224
79727	C-W INDUSTRIES	550 DAVISVILLE RD.	WARMINSTER, PA 18974
80009	TEKTRONIX, INC.	P. O. BOX 500	BEAVERTON, OR 97077
80031	ELECTRA-MIDLAND CORP., MEPCO DIV., A NORTH AMERICAN PHILLIPS CO.	22 COLUMBIA RD.	MORRISTOWN, NJ 07960
80294	BOURNS, INC., INSTRUMENT DIV.	6135 MAGNOLIA AVE.	RIVERSIDE, CA 92506
82647	TEXAS INSTRUMENTS, INC., CONTROL PRODUCTS DIV.	34 FOREST ST.	ATTLEBORO, MA 02703
83003	VARO, INC.	800 W. GARLAND AVE.	GARLAND, TX 75040
86684	RCA CORP., ELECTRONIC COMPONENTS	415 S. 5TH ST.	HARRISON, NJ 07029
90201	MALLORY CAPACITOR CO., DIV. OF P. R. MALLORY CO., INC.	3029 E. WASHINGTON ST.	INDIANAPOLIS, IN 46206
91637	DALE ELECTRONICS, INC.	P. O. BOX 609	COLUMBUS, NB 68601
93410	ESSEX INTERNATIONAL, INC., CONTROLS DIV. MANSFIELD PLANT	P. O. BOX 1007	MANSFIELD, OH 44903
99942	CENTRALAB SEMICONDUCTOR, CENTRALAB ELECTRONICS, DIV. OF GLOBE-UNION, INC.	4501 N. ARDEN DR.	EL MONTE, CA 91734

http://manuals.hillcom

Ckt No.	Tektronix Part No.	Serial/Model No. Eff	Dscont	Name & Description	Mfr Code	Mfr Part Number
A1	670-1956-01			CKT BOARD ASSY:MAIN INTERFACE	80009	670-1956-01
A2	670-1370-04			CKT BOARD ASSY:LOGIC	80009	670-1370-04
A3	670-1371-05			CKT BOARD ASSY:TRIGGER SELECT	80009	670-1371-05
A4	670-3186-00			CKT BOARD ASSY:VERTICAL INTERFACE	80009	670-3186-00
A5	670-3154-01			CKT BOARD ASSY:VERTICAL AMPLIFIER	80009	670-3154-01
A6	670-3017-00			CKT BOARD ASSY:HORIZONTAL AMPLIFIER	80009	670-3017-00
A7	670-1961-00			CKT BOARD ASSY:OUTPUT SIGNALS	80009	670-1961-00
A8	670-2846-00	B010100	B129999	CKT BOARD ASSY:Z-AXIS	80009	670-2846-00
A8	670-2846-02	B130000		CKT BOARD ASSY:Z-AXIS	80009	670-2846-02
A9	670-2844-00	B010100	B059999	CKT BOARD ASSY:ANODE	80009	670-2844-00
A9	670-2844-01	B060000		CKT BOARD ASSY:ANODE	80009	670-2844-01
A10	670-2843-00			CKT BOARD ASSY:HIGH VOLTAGE	80009	670-2843-00
A11	670-1382-05	B010100	B119999	CKT BOARD ASSY:RECTIFIER	80009	670-1382-05
A11	670-1382-06	B120000		CKT BOARD ASSY:RECTIFIER	80009	670-1382-06
A12	670-1376-10	B010100	B109999	CKT BOARD ASSY:REGULATOR	80009	670-1376-10
A12	670-1376-16	B110000		CKT BOARD ASSY:REGULATOR	80009	670-1376-16
A13	670-1900-03			CKT BOARD ASSY:READOUT	80009	670-1900-03
A14	670-2845-00	B010100	B149999	CKT BOARD ASSY:STORAGE	80009	670-2845-00
A14	670-2845-01	B150000		CKT BOARD ASSY:STORAGE	80009	670-2845-01
A15	670-1374-00			CKT BOARD ASSY:VERTICAL INTERCONNECT	80009	670-1374-00
A16	670-0702-03			CKT BOARD ASSY:GRATICULE LIGHTS	80009	670-0702-03
A17	670-2847-00			CKT BOARD ASSY:MODE SWITCH	80009	670-2847-00
A18	670-4346-00	XB140000		CKT BOARD ASSY:PROTECTION	80009	670-4346-00
B1001	147-0008-00			MOTOR AC:BARBER COLMAN	05624	AYAA13080
C1	290-0271-00			CAP.,FXD,ELCTLT:9UF,+20-15%,125V	56289	109D905C2125F2
C3	290-0302-00			CAP.,FXD,ELCTLT:100UF,10%,20V	56289	150D107X9020S2
C5	290-0302-00			CAP.,FXD,ELCTLT:100UF,10%,20V	56289	150D107X9020S2
C7	290-0302-00			CAP.,FXD,ELCTLT:100UF,10%,20V	56289	150D107X9020S2
C9	290-0271-00			CAP.,FXD,ELCTLT:9UF,+20-15%,125V	56289	109D905C2125F2
C16	283-0068-00			CAP.,FXD,CER DI:0.01UF,+100-0%,500V	56289	19C241
C18	283-0068-00			CAP.,FXD,CER DI:0.01UF,+100-0%,500V	56289	19C241
C44	283-0081-00			CAP.,FXD,CER DI:0.1UF,+80-20%,25V	56289	36C600
C48	283-0081-00			CAP.,FXD,CER DI:0.1UF,+80-20%,25V	56289	36C600
C55	283-0003-00			CAP.,FXD,CER DI:0.01UF,+80-20%,150V	72982	855-547E103Z
C58	283-0003-00			CAP.,FXD,CER DI:0.01UF,+80-20%,150V	72982	855-547E103Z
C59	283-0672-00			CAP.,FXD,MICA D:200PF,1%,500V	00853	D155F201F0
C60	281-0564-00			CAP.,FXD,CER DI:24PF,5%,500V	72982	301-000C0G0240J
C67	281-0605-00			CAP.,FXD,CER DI:200PF,10%,500V	72982	301-000Y5D0201K
C76	283-0000-00			CAP.,FXD,CER DI:0.001UF,+100-0%,500V	72982	831-516E102P
C89	283-0003-00			CAP.,FXD,CER DI:0.01UF,+80-20%,150V	72982	855-547E103Z
C136	281-0547-00			CAP.,FXD,CER DI:2.7PF,10%,500V	72982	301-000C0J0279C
C137	283-0000-00			CAP.,FXD,CER DI:0.001UF,+100-0%,500V	72982	831-516E102P
C138	281-0503-00			CAP.,FXD,CER DI:8PF,+/-0.5PF,500V	72982	301-000C0H0809D
C146	281-0547-00			CAP.,FXD,CER DI:2.7PF,10%,500V	72982	301-000C0J0279C
C148	281-0503-00			CAP.,FXD,CER DI:8PF,+/-0.5PF,500V	72982	301-000C0H0809D
C149	283-0000-00			CAP.,FXD,CER DI:0.001UF,+100-0%,500V	72982	831-516E102P
C152	283-0000-00			CAP.,FXD,CER DI:0.001UF,+100-0%,500V	72982	831-516E102P
C166	281-0547-00			CAP.,FXD,CER DI:2.7PF,10%,500V	72982	301-000C0J0279C
C168	281-0503-00			CAP.,FXD,CER DI:8PF,+/-0.5PF,500V	72982	301-000C0H0809D
C193	283-0026-00			CAP.,FXD,CER DI:0.2UF,+80-20%,25V	56289	274C3
C195	283-0003-00			CAP.,FXD,CER DI:0.01UF,+80-20%,150V	72982	855-547E103Z
C196	283-0026-00			CAP.,FXD,CER DI:0.2UF,+80-20%,25V	56289	274C3
C198	283-0026-00			CAP.,FXD,CER DI:0.2UF,+80-20%,25V	56289	274C3
C301	283-0003-00			CAP.,FXD,CER DI:0.01UF,+80-20%,150V	72982	855-547E103Z
C305	283-0004-00			CAP.,FXD,CER DI:0.02UF,+80-20%,150V	72982	855016Z5V0203Z
C322	281-0572-00			CAP.,FXD,CER DI:6.8PF,+/-0.5PF,500V	72982	301-000C0H0689D

http://tekroman.com

Ckt No.	Tektronix Part No.	Serial/Model No. Eff	Dscont	Name & Description	Mfr Code	Mfr Part Number
C329	281-0572-00			CAP.,FXD,CER DI:6.8PF,+/-0.5PF,500V	72982	301-000C0H0689D
C342	283-0000-00			CAP.,FXD,CER DI:0.001UF,+100-0%,500V	72982	831-516E102P
C348	283-0000-00			CAP.,FXD,CER DI:0.001UF,+100-0%,500V	72982	831-516E102P
C545	281-0550-00			CAP.,FXD,CER DI:120PF,10%,500V	72982	301-000X5P0121K
C552	283-0002-00			CAP.,FXD,CER DI:0.01UF,+80-20%,500V	72982	811-546E103Z
C555	283-0083-00			CAP.,FXD,CER DI:0.0047UF,20%,500V	72982	811-565C472J
C566	281-0064-00			CAP.,VAR,PLSTC:0.25-1.5PF,600V	72982	530-002
C571	283-0002-00			CAP.,FXD,CER DI:0.01UF,+80-20%,500V	72982	811-546E103Z
C574	283-0002-00			CAP.,FXD,CER DI:0.01UF,+80-20%,500V	72982	811-546E103Z
C575	283-0083-00			CAP.,FXD,CER DI:0.0047UF,20%,500V	72982	811-565C472J
C584	281-0546-00			CAP.,FXD,CER DI:330PF,10%,500V	72982	301-000X5P0331K
C586	281-0064-00			CAP.,VAR,PLSTC:0.25-1.5PF,600V	72982	530-002
C588	281-0091-00			CAP.,VAR,CER DI:2-8PF	72982	538-011-89A
C591	283-0002-00			CAP.,FXD,CER DI:0.01UF,+80-20%,500V	72982	811-546E103Z
C593	283-0002-00			CAP.,FXD,CER DI:0.01UF,+80-20%,500V	72982	811-546E103Z
C595	283-0081-00			CAP.,FXD,CER DI:0.1UF,+80-20%,25V	56289	36C600
C597	283-0081-00			CAP.,FXD,CER DI:0.1UF,+80-20%,25V	56289	36C600
C598	283-0111-00			CAP.,FXD,CER DI:0.1UF,20%,50V	72982	8131N075651104M
C599	283-0081-00			CAP.,FXD,CER DI:0.1UF,+80-20%,25V	56289	36C600
C605	281-0612-00	B010100	B139999	CAP.,FXD,CER DI:5.6PF,+/-0.5PF,500V	72982	374-001C0H0569D
C605	281-0584-00	B140000		CAP.,FXD,CER DI:100PF,5%,500V	72982	301-000Y5D0101J
C610	283-0000-00			CAP.,FXD,CER DI:0.001UF,+100-0%,500V	72982	831-516E102P
C615	281-0513-00			CAP.,FXD,CER DI:27PF,+/-5.4PF,500V	72982	301-000P2G0270M
C619	283-0000-00			CAP.,FXD,CER DI:0.001UF,+100-0%,500V	72982	831-516E102P
C622	283-0003-00			CAP.,FXD,CER DI:0.01UF,+80-20%,150V	72982	855-547E103Z
C637	281-0510-00			CAP.,FXD,CER DI:22PF,+/-4.4PF,500V	72982	301-000C0G0220M
C639	283-0111-00			CAP.,FXD,CER DI:0.1UF,20%,50V	72982	8131N075651104M
C643	283-0111-00			CAP.,FXD,CER DI:0.1UF,20%,50V	72982	8131N075651104M
C662	283-0080-00			CAP.,FXD,CER DI:0.022UF,+80-20%,25V	56289	19C611
C667	283-0000-00			CAP.,FXD,CER DI:0.001UF,+100-0%,500V	72982	831-516E102P
C669	283-0111-00			CAP.,FXD,CER DI:0.1UF,20%,50V	72982	8131N075651104M
C679	283-0111-00			CAP.,FXD,CER DI:0.1UF,20%,50V	72982	8131N075651104M
C806	290-0468-00			CAP.,FXD,ELCTLT:250UF,+75-10%,150V	56289	68D10470
C808	290-0507-00			CAP.,FXD,ELCTLT:1800UF,+75-10%,75V	56289	68D10472
C809	290-0507-00			CAP.,FXD,ELCTLT:1800UF,+75-10%,75V	56289	68D10472
C810	285-0555-00			CAP.,FXD,PLSTC:0.1UF,20%,100V	56289	417P10401
C811	290-0581-00			CAP.,FXD,ELCTLT:14,000UF,+75-10%,25V	56289	68D10489
C813	290-0506-00			CAP.,FXD,ELCTLT:9600UF,+100-10%,25V	56289	68D10471
C814	290-0506-00			CAP.,FXD,ELCTLT:9600UF,+100-10%,25V	56289	68D10471
C820	285-0555-00			CAP.,FXD,PLSTC:0.1UF,20%,100V	56289	417P10401
C821	290-0508-00			CAP.,FXD,ELCTLT:18,000UF,+100-1%,15V	56289	68D10444
C823	283-0004-00			CAP.,FXD,CER DI:0.02UF,+80-20%,150V	72982	855016Z5V0203Z
C827	283-0077-00			CAP.,FXD,CER DI:330PF,5%,500V	56289	40C94A3
C858	283-0078-00			CAP.,FXD,CER DI:0.001UF,20%,500V	56289	20C114A8
C866	283-0078-00			CAP.,FXD,CER DI:0.001UF,20%,500V	56289	20C114A8
C876	283-0328-00			CAP.,FXD,CER DI:0.03UF,+80-20%,200V	72982	8131N225651303Z
C880	283-0638-00			CAP.,FXD,MICA D:130PF,1%,100V	00853	D151E131F0
C889	290-0415-00			CAP.,FXD,ELCTLT:5.6UF,10%,35V	56289	150D565X9035B2
C923	281-0591-00			CAP.,FXD,CER DI:5600PF,20%,200V	72982	3930-01Z5V0562Z
C936	283-0178-00			CAP.,FXD,CER DI:0.1UF,+80-20%,100V	72982	8131N145651104Z
C943	283-0078-00			CAP.,FXD,CER DI:0.001UF,20%,500V	56289	20C114A8
C950	283-0083-00			CAP.,FXD,CER DI:0.0047UF,20%,500V	72982	811-565C472J
C975	283-0000-00			CAP.,FXD,CER DI:0.001UF,+100-0%,500V	72982	831-516E102P
C979	281-0591-00			CAP.,FXD,CER DI:5600PF,20%,200V	72982	3930-01Z5V0562Z

http://manuals.sqrl.com

Ckt No.	Tektronix Part No.	Serial/Model No. Eff	Dscont	Name & Description	Mfr Code	Mfr Part Number
C985	283-0083-00			CAP.,FXD,CER DI:0.0047UF,20%,500V	72982	811-565C472J
C1107	283-0003-00			CAP.,FXD,CER DI:0.01UF,+80-20%,150V	72982	855-547E103Z
C1109	283-0004-00			CAP.,FXD,CER DI:0.02UF,+80-20%,150V	72982	855016Z5V0203Z
C1115	281-0064-00			CAP.,VAR,PLSTC:0.25-1.5PF,600V	72982	530-002
C1120	283-0004-00			CAP.,FXD,CER DI:0.02UF,+80-20%,150V	72982	855016Z5V0203Z
C1124	283-0004-00			CAP.,FXD,CER DI:0.02UF,+80-20%,150V	72982	855016Z5V0203Z
C1127	283-0111-00			CAP.,FXD,CER DI:0.1UF,20%,50V	72982	8131N075651104M
C1138	283-0000-00			CAP.,FXD,CER DI:0.001UF,+100-0%,500V	72982	831-516E102P
C1158	281-0512-00			CAP.,FXD,CER DI:27PF,+/-2.7PF,500V	72982	308-000C0G0270K
C1159	281-0064-00			CAP.,VAR,PLSTC:0.25-1.5PF,600V	72982	530-002
C1163	283-0004-00	B010100	B129999	CAP.,FXD,CER DI:0.02UF,+80-20%,150V	72982	855016Z5V0203Z
C1163	283-0068-00	B130000		CAP.,FXD,CER DI:0.01UF,+100-0%,500V	56289	19C241
C1164	283-0057-00			CAP.,FXD,CER DI:0.1UF,+80-20%,200V	56289	274C10
C1168	283-0111-00			CAP.,FXD,CER DI:0.1UF,20%,50V	72982	8131N075651104M
C1177	283-0010-00			CAP.,FXD,CER DI:0.05UF,+100-20%,50V	56289	273C20
C1178	290-0527-00			CAP.,FXD,ELCTLT:15UF,20%,20V	90201	TDC156M020FL
C1185	281-0524-00			CAP.,FXD,CER DI:150PF,+/-30PF,500V	72982	301-000X5U0151M
C1193	285-0629-00			CAP.,FXD,PLSTC:0.047UF,20%,100V	01002	64F19AB473
C1198	290-0287-00			CAP.,FXD,ELCTLT:47UF,20%,25V	01002	76F02KK470
C1201	283-0345-00			CAP.,FXD,CER DI:1000PF,10%,10,000V	80009	283-0345-00
C1202	283-0345-00			CAP.,FXD,CER DI:1000PF,10%,10,000V	80009	283-0345-00
C1206	283-0345-00			CAP.,FXD,CER DI:1000PF,10%,10,000V	80009	283-0345-00
C1210	283-0111-00			CAP.,FXD,CER DI:0.1UF,20%,50V	72982	8131N075651104M
C1211	283-0105-00			CAP.,FXD,CER DI:0.01UF,+80-20%,2000V	56289	41C316
C1213	283-0082-00			CAP.,FXD,CER DI:0.01UF,+80-20%,4000V	56289	112C29
C1214	283-0082-00			CAP.,FXD,CER DI:0.01UF,+80-20%,4000V	56289	112C29
C1217	283-0105-00			CAP.,FXD,CER DI:0.01UF,+80-20%,2000V	56289	41C316
C1219	285-1077-00			CAP.,FXD,PLSTC:0.10UF,20%,600V	14752	230B1F104
C1224	290-0135-00			CAP.,FXD,ELCTLT:15UF,20%,20V	12954	D15820MI
C1225	283-0203-00			CAP.,FXD,CER DI:0.47UF,20%,50V	72982	8131N075651474M
C1228	283-0271-00			CAP.,FXD,CER DI:0.001UF,20%,4000V	72982	828552Y550102M
C1232	290-0164-00			CAP.,FXD,ELCTLT:1UF,+50-10%,150V	56289	30D105F150BA4
C1235	281-0513-00			CAP.,FXD,CER DI:27PF,+/-5.4PF,500V	72982	301-000P2G0270M
C1237	283-0271-00			CAP.,FXD,CER DI:0.001UF,20%,4000V	72982	828552Y550102M
C1238	283-0271-00			CAP.,FXD,CER DI:0.001UF,20%,4000V	72982	828552Y550102M
C1240	283-0013-00			CAP.,FXD,CER DI:0.01UF,+100-0%,1000V	56289	33C29A7
C1245	283-0003-00			CAP.,FXD,CER DI:0.01UF,+80-20%,150V	72982	855-547E103Z
C1250	290-0164-00			CAP.,FXD,ELCTLT:1UF,+50-10%,150V	56289	30D105F150BA4
C1253	281-0513-00			CAP.,FXD,CER DI:27PF,+/-5.4PF,500V	72982	301-000P2G0270M
C1255	283-0261-00			CAP.,FXD,CER DI:0.01UF,20%,4000V	72982	3888-510E103H
C1256	283-0271-00			CAP.,FXD,CER DI:0.001UF,20%,4000V	72982	828552Y550102M
C1263	281-0543-00			CAP.,FXD,CER DI:270PF,10%,500V	72982	301-055X5P1271K
C1264	283-0271-00			CAP.,FXD,CER DI:0.001UF,20%,4000V	72982	828552Y550102M
C1270	283-0003-00			CAP.,FXD,CER DI:0.01UF,+80-20%,150V	72982	855-547E103Z
C1273	283-0003-00			CAP.,FXD,CER DI:0.01UF,+80-20%,150V	72982	855-547E103Z
C1292	283-0003-00			CAP.,FXD,CER DI:0.01UF,+80-20%,150V	72982	855-547E103Z
C1415	283-0003-00			CAP.,FXD,CER DI:0.01UF,+80-20%,150V	72982	855-547E103Z
C1424	290-0530-00			CAP.,FXD,ELCTLT:68UF,20%,6V	90201	TDC686M006FL
C1444	285-0703-00			CAP.,FXD,PLSTC:0.1UF,5%,100V	01002	64F24AC104
C1461	281-0605-00			CAP.,FXD,CER DI:200PF,10%,500V	72982	301-000Y5D0201K
C1476	283-0058-00			CAP.,FXD,CER DI:0.027UF,10%,100V	72982	8131N147W5R273K
C1491	283-0041-00			CAP.,FXD,CER DI:0.0033UF,5%,500V	72982	841-541B332J
C1501	283-0003-00			CAP.,FXD,CER DI:0.01UF,+80-20%,150V	72982	855-547E103Z
C1517	290-0114-00			CAP.,FXD,ELCTLT:47UF,20%,6V	56289	150D476X0006B2
					56289	1500396X9010B2

http://manuals.sqrl.com

Ckt No.	Tektronix Part No.	Serial/Model No. Eff	Dscont	Name & Description	Mfr Code	Mfr Part Number
C1524	283-0003-00			CAP.,FXD,CER DI:0.01UF,+80-20%,150V	72982	855-547E103Z
C1534	283-0111-00			CAP.,FXD,CER DI:0.1UF,20%,50V	72982	8131N075651104M
C1537	283-0111-00			CAP.,FXD,CER DI:0.1UF,20%,50V	72982	8131N075651104M
C1542	283-0111-00			CAP.,FXD,CER DI:0.1UF,20%,50V	72982	8131N075651104M
C1544	290-0297-00			CAP.,FXD,ELCTLT:39UF,10%,10V	56289	150D396X9010B2
C1548	290-0297-00			CAP.,FXD,ELCTLT:39UF,10%,10V	56289	150D396X9010B2
C1550	281-0519-00			CAP.,FXD,CER DI:47PF,+/-4.7PF,500V	72982	308-000C0G0470K
C1565	283-0003-00			CAP.,FXD,CER DI:0.01UF,+80-20%,150V	72982	855-547E103Z
C1574	283-0059-00			CAP.,FXD,CER DI:1UF,+80-20%,25V	72982	8141N038651105Z
C1580	281-0605-00	B010100	B149999	CAP.,FXD,CER DI:200PF,10%,500V	72982	301-000Y5D0201K
C1580	283-0023-00	B150000		CAP.,FXD,CER DI:0.1UF,+80-20%,10V	91418	MX104Z120180
C1583	283-0059-00			CAP.,FXD,CER DI:1UF,+80-20%,25V	72982	8141N038651105Z
C1597	283-0003-00			CAP.,FXD,CER DI:0.01UF,+80-20%,150V	72982	855-547E103Z
C1601	290-0114-00			CAP.,FXD,ELCTLT:47UF,20%,6V	56289	150D476X0006B2
C1606	283-0003-00			CAP.,FXD,CER DI:0.01UF,+80-20%,150V	72982	855-547E103Z
C1608	290-0114-00			CAP.,FXD,ELCTLT:47UF,20%,6V	56289	150D476X0006B2
C1611	290-0297-00			CAP.,FXD,ELCTLT:39UF,10%,10V	56289	150D396X9010B2
C1614	283-0088-00	B010100	B149999	CAP.,FXD,CER DI:1000PF,5%,500V	56289	20C285
C1614	283-0116-00	B150000		CAP.,FXD,CER DI:820PF,5%,500V	72982	801-5478B21J
					72982	8131N147W5R104K
C1622	290-0244-00			CAP.,FXD,ELCTLT:0.47UF,5%,35V	56289	162D474X5035BC2
C1636	283-0150-00			CAP.,FXD,CER DI:650PF,5%,200V	72982	835-515B651J
C1637	281-0584-00			CAP.,FXD,CER DI:100PF,5%,500V	72982	301-000Y5D0101J
C1678	283-0065-00			CAP.,FXD,CER DI:0.001UF,5%,100V	72982	805-505B102J
C1695	290-0187-00			CAP.,FXD,ELCTLT:4.7UF,20%,35V	90201	TAS475M035PIC
C1703	283-0003-00			CAP.,FXD,CER DI:0.01UF,+80-20%,150V	72982	855-547E103Z
C1707	283-0111-00			CAP.,FXD,CER DI:0.1UF,20%,50V	72982	8131N075651104M
C1711	283-0003-00			CAP.,FXD,CER DI:0.01UF,+80-20%,150V	72982	855-547E103Z
C1713	281-0557-00			CAP.,FXD,CER DI:1.8PF,10%,500V	72982	301-000C0K0189B
C1730	281-0523-00			CAP.,FXD,CER DI:100PF,+/-20PF,350V	72982	301-000U2M0101M
C1731	281-0523-00			CAP.,FXD,CER DI:100PF,+/-20PF,350V	72982	301-000U2M0101M
C1736	290-0164-00			CAP.,FXD,ELCTLT:1UF,+50-10%,150V	56289	30D105F150BA4
C1743	283-0111-00			CAP.,FXD,CER DI:0.1UF,20%,50V	72982	8131N075651104M
C1783	283-0111-00			CAP.,FXD,CER DI:0.1UF,20%,50V	72982	8131N075651104M
C1789	283-0003-00			CAP.,FXD,CER DI:0.01UF,+80-20%,150V	72982	855-547E103Z
C1793	283-0111-00			CAP.,FXD,CER DI:0.1UF,20%,50V	72982	8131N075651104M
C1796	283-0000-00			CAP.,FXD,CER DI:0.001UF,+100-0%,500V	72982	831-516E102P
C1798	283-0092-00			CAP.,FXD,CER DI:0.03UF,+80-20%,200V	72982	845-534E303Z
C1831	283-0092-00			CAP.,FXD,CER DI:0.03UF,+80-20%,200V	72982	845-534E303Z
C1838	283-0000-00			CAP.,FXD,CER DI:0.001UF,+100-0%,500V	72982	831-516E102P
C1924	290-0536-00			CAP.,FXD,ELCTLT:10UF,20%,25V	90201	TDC106M025FL
C1925	290-0536-00			CAP.,FXD,ELCTLT:10UF,20%,25V	90201	TDC106M025FL
C1926	290-0535-00			CAP.,FXD,ELCTLT:33UF,20%,10V	56289	196D336X0010KA1
C1948	285-1077-00			CAP.,FXD,PLSTC:0.10UF,20%,600V	14752	230B1F104
C1981	283-0092-00			CAP.,FXD,CER DI:0.03UF,+80-20%,200V	72982	845-534E303Z
C1983	283-0111-00			CAP.,FXD,CER DI:0.1UF,20%,50V	72982	8131N075651104M
C1985	290-0531-00			CAP.,FXD,ELCTLT:100UF,20%,10V	90201	TDC107M010CL
C1987	283-0111-00			CAP.,FXD,CER DI:0.1UF,20%,50V	72982	8131N075651104M
C1989	283-0111-00			CAP.,FXD,CER DI:0.1UF,20%,50V	72982	8131N075651104M
C2101	283-0004-00			CAP.,FXD,CER DI:0.02UF,+80-20%,150V	72982	855016Z5V0203Z
C2109	283-0003-00			CAP.,FXD,CER DI:0.01UF,+80-20%,150V	72982	855-547E103Z
C2112	283-0077-00			CAP.,FXD,CER DI:330PF,5%,500V	56289	40C94A3
C2115	290-0534-00			CAP.,FXD,ELCTLT:1UF,20%,35V	56289	196D105X0035HA1
C2117	290-0534-00			CAP.,FXD,ELCTLT:1UF,20%,35V	56289	196D105X0035HA1
C2119	290-0534-00			CAP.,FXD,ELCTLT:1UF,20%,35V	56289	196D105X0035HA1
C2121	283-0594-00			CAP.,FXD,MICA D:0.001UF,1%,100V	00853	D151F102F0

http://manuman.com

Ckt No.	Tektronix Part No.	Serial/Model No. Eff	Dscont	Name & Description	Mfr Code	Mfr Part Number
C2135	285-0698-00			CAP.,FXD,PLSTC:0.0082UF,5%,100V	01002	64F10AC682
C2140	283-0103-00			CAP.,FXD,CER DI:180PF,5%,500V	56289	40C638
C2144	281-0544-00			CAP.,FXD,CER DI:5.6PF,10%,500V	72982	301-000C0H0569D
C2145	290-0534-00			CAP.,FXD,ELCTLT:1UF,20%,35V	56289	196D105X0035HA1
C2155	283-0103-00			CAP.,FXD,CER DI:180PF,5%,500V	56289	40C638
C2183	283-0032-00			CAP.,FXD,CER DI:470PF,5%,500V	72982	831-500Z5D471J
C2185	283-0004-00			CAP.,FXD,CER DI:0.02UF,+80-20%,150V	72982	855016Z5V0203Z
C2214	283-0032-00			CAP.,FXD,CER DI:470PF,5%,500V	72982	831-500Z5D471J
C2242	283-0000-00			CAP.,FXD,CER DI:0.001UF,+100-0%,500V	72982	831-516E102P
C2244	283-0004-00			CAP.,FXD,CER DI:0.02UF,+80-20%,150V	72982	855016Z5V0203Z
C2255	283-0000-00			CAP.,FXD,CER DI:0.001UF,+100-0%,500V	72982	831-516E102P
C2281	283-0054-00	XB040000		CAP.,FXD,CER DI:150PF,5%,200V	72982	855-535U2J151J
C2341	283-0177-00			CAP.,FXD,CER DI:1UF,+80-20%,25V	72982	8131N039651105Z
C2345	283-0159-00			CAP.,FXD,CER DI:18PF,5%,50V	72982	8111A058C0G180J
C2347	281-0627-00			CAP.,FXD,CER DI:1PF,+/-0.25PF,500V	72982	301-000C0G0109C
C2348	283-0185-00			CAP.,FXD,CER DI:2.5PF,5%,50V	72982	8101A058C0K259B
C2355	283-0159-00			CAP.,FXD,CER DI:18PF,5%,50V	72982	8111A058C0G180J
C2357	281-0627-00			CAP.,FXD,CER DI:1PF,+/-0.25PF,500V	72982	301-000C0G0109C
C2358	283-0185-00			CAP.,FXD,CER DI:2.5PF,5%,50V	72982	8101A058C0K259B
C2366	281-0562-00			CAP.,FXD,CER DI:39PF,10%,500V	72982	301-000U2J0390K
C2376	281-0562-00			CAP.,FXD,CER DI:39PF,10%,500V	72982	301-000U2J0390K
C2387	281-0509-00			CAP.,FXD,CER DI:15PF,+/-1.5PF,500V	72982	301-000C0G0150K
C2397	281-0509-00			CAP.,FXD,CER DI:15PF,+/-1.5PF,500V	72982	301-000C0G0150K
C2403	283-0003-00			CAP.,FXD,CER DI:0.01UF,+80-20%,150V	72982	855-547E103Z
C2409	283-0077-00			CAP.,FXD,CER DI:330PF,5%,500V	56289	40C94A3
C2411	281-0564-00			CAP.,FXD,CER DI:24PF,5%,500V	72982	301-000C0G0240J
C2416	281-0123-00			CAP.,VAR,CER DI:5-25PF,100V	72982	518-000A5-25
C2418	281-0158-00			CAP.,VAR,CER DI:7-45PF,50V	72982	518-000G7-45
C2429	283-0000-00			CAP.,FXD,CER DI:0.001UF,+100-0%,500V	72982	831-516E102P
C2445	283-0000-00			CAP.,FXD,CER DI:0.001UF,+100-0%,500V	72982	831-516E102P
C2448	281-0661-00			CAP.,FXD,CER DI:0.8PF,+/-0.1PF,500V	72982	301-000C0G0808B
C2456	281-0122-00			CAP.,VAR,CER DI:2.5-9PF,100V	72982	518-000A2.5-9
C2465	283-0103-00			CAP.,FXD,CER DI:180PF,5%,500V	56289	40C638
C2469	281-0167-00			CAP.,VAR,CER DI:9-45PF,200V	72982	538-011-D 9-45
C2509	283-0649-00			CAP.,FXD,MICA D:105PF,1%,300V	00853	D153F1050F0
C2511	281-0205-00			CAP.,VAR,PLSTC:5.5-65PF,100V	80031	C010GA/60E
C2524	283-0000-00			CAP.,FXD,CER DI:0.001UF,+100-0%,500V	72982	831-516E102P
C2545	283-0000-00			CAP.,FXD,CER DI:0.001UF,+100-0%,500V	72982	831-516E102P
C2548	281-0661-00			CAP.,FXD,CER DI:0.8PF,+/-0.1PF,500V	72982	301-000C0G0808B
C2565	283-0103-00			CAP.,FXD,CER DI:180PF,5%,500V	56289	40C638
C2593	283-0111-00			CAP.,FXD,CER DI:0.1UF,20%,50V	72982	8131N075651104M
C2595	290-0527-00			CAP.,FXD,ELCTLT:15UF,20%,20V	90201	TDC156M020FL
C2597	290-0527-00			CAP.,FXD,ELCTLT:15UF,20%,20V	90201	TDC156M020FL
CR26	152-0141-02			SEMICOND DEVICE:SILICON,30V,150MA	07910	1N4152
CR27	152-0141-02			SEMICOND DEVICE:SILICON,30V,150MA	07910	1N4152
CR33	152-0141-02			SEMICOND DEVICE:SILICON,30V,150MA	07910	1N4152
CR44	152-0141-02			SEMICOND DEVICE:SILICON,30V,150MA	07910	1N4152
CR48	152-0141-02			SEMICOND DEVICE:SILICON,30V,150MA	07910	1N4152
CR84	152-0333-00			SEMICOND DEVICE:SILICON,55V,200MA	80009	152-0333-00
CR85	152-0333-00			SEMICOND DEVICE:SILICON,55V,200MA	80009	152-0333-00
CR93	152-0141-02			SEMICOND DEVICE:SILICON,30V,150MA	07910	1N4152
CR124	152-0141-02			SEMICOND DEVICE:SILICON,30V,150MA	07910	1N4152
CR125	152-0141-02			SEMICOND DEVICE:SILICON,30V,150MA	07910	1N4152

http://easycoder.sqdl.com

Ckt No.	Tektronix Part No.	Serial/Model No. Eff	Dscont	Name & Description	Mfr Code	Mfr Part Number
CR126	152-0141-02			SEMICOND DEVICE:SILICON,30V,150MA	07910	1N4152
CR130	152-0141-02			SEMICOND DEVICE:SILICON,30V,150MA	07910	1N4152
CR140	152-0141-02			SEMICOND DEVICE:SILICON,30V,150MA	07910	1N4152
CR155	152-0141-02			SEMICOND DEVICE:SILICON,30V,150MA	07910	1N4152
CR160	152-0141-02			SEMICOND DEVICE:SILICON,30V,150MA	07910	1N4152
CR341	152-0141-02			SEMICOND DEVICE:SILICON,30V,150MA	07910	1N4152
CR349	152-0141-02			SEMICOND DEVICE:SILICON,30V,150MA	07910	1N4152
CR530	152-0153-00			SEMICOND DEVICE:SILICON,15V,50MA	13715	FD7003
CR531	152-0141-02			SEMICOND DEVICE:SILICON,30V,150MA	07910	1N4152
CR532	152-0141-02			SEMICOND DEVICE:SILICON,30V,150MA	07910	1N4152
CR533	152-0153-00			SEMICOND DEVICE:SILICON,15V,50MA	13715	FD7003
CR543	152-0141-02			SEMICOND DEVICE:SILICON,30V,150MA	07910	1N4152
CR544	152-0141-02			SEMICOND DEVICE:SILICON,30V,150MA	07910	1N4152
CR549	152-0153-00			SEMICOND DEVICE:SILICON,15V,50MA	13715	FD7003
CR621	152-0141-02			SEMICOND DEVICE:SILICON,30V,150MA	07910	1N4152
CR622	152-0141-02			SEMICOND DEVICE:SILICON,30V,150MA	07910	1N4152
CR635	152-0141-02			SEMICOND DEVICE:SILICON,30V,150MA	07910	1N4152
CR641	152-0141-02			SEMICOND DEVICE:SILICON,30V,150MA	07910	1N4152
CR672	152-0141-02			SEMICOND DEVICE:SILICON,30V,150MA	07910	1N4152
CR674	152-0141-02			SEMICOND DEVICE:SILICON,30V,150MA	07910	1N4152
CR676	152-0141-02			SEMICOND DEVICE:SILICON,30V,150MA	07910	1N4152
CR806	152-0488-00			SEMICOND DEVICE:SILICON,200V,1500MA	14936	KBP02-8
CR808	152-0488-00			SEMICOND DEVICE:SILICON,200V,1500MA	14936	KBP02-8
CR811	152-0406-00			SEMICOND DEVICE:SILICON,200V,3A	83003	W601
CR820	152-0423-00			SEMICOND DEVICE:SILICON,300V,3A	04713	1N5000
CR821	152-0423-00			SEMICOND DEVICE:SILICON,300V,3A	04713	1N5000
CR852	152-0141-02			SEMICOND DEVICE:SILICON,30V,150MA	07910	1N4152
CR861	152-0141-02			SEMICOND DEVICE:SILICON,30V,150MA	07910	1N4152
CR867	152-0061-00			SEMICOND DEVICE:SILICON,175V,100MA	80009	152-0061-00
CR868	152-0061-00			SEMICOND DEVICE:SILICON,175V,100MA	80009	152-0061-00
CR875	152-0066-00			SEMICOND DEVICE:SILICON,400V,750MA	02735	37304
CR883	152-0141-02			SEMICOND DEVICE:SILICON,30V,150MA	07910	1N4152
CR885	152-0141-02			SEMICOND DEVICE:SILICON,30V,150MA	07910	1N4152
CR888	152-0141-02			SEMICOND DEVICE:SILICON,30V,150MA	07910	1N4152
CR891	152-0141-02			SEMICOND DEVICE:SILICON,30V,150MA	07910	1N4152
CR894	152-0141-02			SEMICOND DEVICE:SILICON,30V,150MA	07910	1N4152
CR895	152-0141-02	XB110000		SEMICOND DEVICE:SILICON,30V,150MA	07910	UN4152
CR896	152-0141-02			SEMICOND DEVICE:SILICON,30V,150MA	07910	1N4152
CR903	152-0066-00			SEMICOND DEVICE:SILICON,400V,750MA	02735	37304
CR920	152-0141-02			SEMICOND DEVICE:SILICON,30V,150MA	07910	1N4152
CR924	152-0061-00			SEMICOND DEVICE:SILICON,175V,100MA	80009	152-0061-00
CR925	152-0061-00			SEMICOND DEVICE:SILICON,175V,100MA	80009	152-0061-00
CR935	152-0066-00			SEMICOND DEVICE:SILICON,400V,750MA	02735	37304
CR941	152-0141-02			SEMICOND DEVICE:SILICON,30V,150MA	07910	1N4152
CR950	152-0141-02			SEMICOND DEVICE:SILICON,30V,150MA	07910	1N4152
CR951	152-0141-02			SEMICOND DEVICE:SILICON,30V,150MA	07910	1N4152
CR952	152-0141-02			SEMICOND DEVICE:SILICON,30V,150MA	07910	1N4152
CR958	152-0066-00			SEMICOND DEVICE:SILICON,400V,750MA	02735	37304
CR961	152-0141-02			SEMICOND DEVICE:SILICON,30V,150MA	07910	1N4152
CR973	152-0061-00			SEMICOND DEVICE:SILICON,175V,100MA	80009	152-0061-00
CR980	152-0141-02			SEMICOND DEVICE:SILICON,30V,150MA	07910	1N4152
CR981	152-0141-02			SEMICOND DEVICE:SILICON,30V,150MA	07910	1N4152
CR989	152-0066-00			SEMICOND DEVICE:SILICON,400V,750MA	02735	37304

http://www.tonar.sqlit.com

Ckt No.	Tektronix Part No.	Serial/Model No. Eff	Dscont	Name & Description	Mfr Code	Mfr Part Number
CR1021	152-0141-02			SEMICOND DEVICE:SILICON,30V,150MA	07910	1N4152
CR1023	152-0141-02			SEMICOND DEVICE:SILICON,30V,150MA	07910	1N4152
CR1024	152-0141-02			SEMICOND DEVICE:SILICON,30V,150MA	07910	1N4152
CR1026	152-0141-02			SEMICOND DEVICE:SILICON,30V,150MA	07910	1N4152
CR1131	152-0141-02			SEMICOND DEVICE:SILICON,30V,150MA	07910	1N4152
CR1133	152-0141-02			SEMICOND DEVICE:SILICON,30V,150MA	07910	1N4152
CR1174	152-0141-02			SEMICOND DEVICE:SILICON,30V,150MA	07910	1N4152
CR1178	152-0141-02			SEMICOND DEVICE:SILICON,30V,150MA	07910	1N4152
CR1180	152-0141-02	XB110948		SEMICOND DEVICE:SILICON,30V,150MA	07910	1N4152
CR1190	152-0141-02			SEMICOND DEVICE:SILICON,30V,150MA	07910	1N4152
CR1202	152-0409-00			SEMICOND DEVICE:SILICON,1200V,5MA	83003	VG-12X
CR1203	152-0409-00			SEMICOND DEVICE:SILICON,1200V,5MA	83003	VG-12X
CR1210	152-0409-00			SEMICOND DEVICE:SILICON,1200V,5MA	83003	VG-12X
CR1213	152-0409-00			SEMICOND DEVICE:SILICON,1200V,5MA	83003	VG-12X
CR1216	152-0331-00			SEMICOND DEVICE:SILICON,800V,25MA	80009	152-0331-00
CR1219	152-0331-00			SEMICOND DEVICE:SILICON,800V,25MA	80009	152-0331-00
CR1223	152-0141-02			SEMICOND DEVICE:SILICON,30V,150MA	07910	1N4152
CR1233	152-0242-00			SEMICOND DEVICE:SILICON,225V,200MA	12969	NDP341
CR1234	152-0242-00			SEMICOND DEVICE:SILICON,225V,200MA	12969	NDP341
CR1238	152-0242-00			SEMICOND DEVICE:SILICON,225V,200MA	12969	NDP341
CR1239	152-0242-00			SEMICOND DEVICE:SILICON,225V,200MA	12969	NDP341
CR1251	152-0242-00			SEMICOND DEVICE:SILICON,225V,200MA	12969	NDP341
CR1255	152-0242-00			SEMICOND DEVICE:SILICON,225V,200MA	12969	NDP341
CR1257	152-0242-00			SEMICOND DEVICE:SILICON,225V,200MA	12969	NDP341
CR1258	152-0242-00			SEMICOND DEVICE:SILICON,225V,200MA	12969	NDP341
CR1412	152-0008-00			SEMICOND DEVICE:GERMANIUM,75V,60MA	03877	T12G
CR1413	152-0008-00			SEMICOND DEVICE:GERMANIUM,75V,60MA	03877	T12G
CR1414	152-0008-00			SEMICOND DEVICE:GERMANIUM,75V,60MA	03877	T12G
CR1424	152-0141-02			SEMICOND DEVICE:SILICON,30V,150MA	07910	1N4152
CR1425	152-0141-02			SEMICOND DEVICE:SILICON,30V,150MA	07910	1N4152
CR1478	152-0141-02			SEMICOND DEVICE:SILICON,30V,150MA	07910	1N4152
CR1496	152-0141-02			SEMICOND DEVICE:SILICON,30V,150MA	07910	1N4152
CR1497	152-0141-02			SEMICOND DEVICE:SILICON,30V,150MA	07910	1N4152
CR1498	152-0141-02			SEMICOND DEVICE:SILICON,30V,150MA	07910	1N4152
CR1499	152-0141-02			SEMICOND DEVICE:SILICON,30V,150MA	07910	1N4152
CR1500	152-0141-02			SEMICOND DEVICE:SILICON,30V,150MA	07910	1N4152
CR1513	152-0141-02	XB150000		SEMICOND DEVICE:SILICON,30V,150MA	07910	1N4152
CR1515	152-0141-02	XB150000		SEMICOND DEVICE:SILICON,30V,150MA	07910	1N4152
CR1538	152-0141-02			SEMICOND DEVICE:SILICON,30V,150MA	07910	1N4152
CR1579	152-0141-02			SEMICOND DEVICE:SILICON,30V,150MA	07910	1N4152
					07910	1N4152
CR1621	152-0141-02			SEMICOND DEVICE:SILICON,30V,150MA	07910	1N4152
					07910	1N4152
					07910	1N4152
CR1663	152-0141-02			SEMICOND DEVICE:SILICON,30V,150MA	07910	1N4152
CR1682	152-0141-02			SEMICOND DEVICE:SILICON,30V,150MA	07910	1N4152
CR1710	152-0141-02			SEMICOND DEVICE:SILICON,30V,150MA	07910	1N4152
CR1727	152-0040-00			SEMICOND DEVICE:SILICON,600V,1A	14099	SC6
CR1733	152-0040-00			SEMICOND DEVICE:SILICON,600V,1A	14099	SC6
CR1737	152-0040-00			SEMICOND DEVICE:SILICON,600V,1A	14099	SC6
CR1738	152-0141-02			SEMICOND DEVICE:SILICON,30V,150MA	07910	1N4152
CR1744	152-0040-00			SEMICOND DEVICE:SILICON,600V,1A	14099	SC6
CR1769	152-0141-02			SEMICOND DEVICE:SILICON,30V,150MA	07910	1N4152
CR1771	152-0141-02			SEMICOND DEVICE:SILICON,30V,150MA	07910	1N4152
CR1772	152-0141-02			SEMICOND DEVICE:SILICON,30V,150MA	07910	1N4152
CR1797	152-0141-02			SEMICOND DEVICE:SILICON,30V,150MA	07910	1N4152
CR1821	152-0141-02			SEMICOND DEVICE:SILICON,30V,150MA	07910	1N4152
CR1822	152-0141-02			SEMICOND DEVICE:SILICON,30V,150MA	07910	1N4152

http://manuals.sqnu.com

Ckt No.	Tektronix Part No.	Serial/Model No. Eff	Dscont	Name & Description	Mfr Code	Mfr Part Number
CR1836	152-0141-02			SEMICOND DEVICE:SILICON,30V,150MA	07910	1N4152
CR1855	152-0141-02			SEMICOND DEVICE:SILICON,30V,150MA	07910	1N4152
CR1856	152-0141-02			SEMICOND DEVICE:SILICON,30V,150MA	07910	1N4152
CR1874	152-0141-02			SEMICOND DEVICE:SILICON,30V,150MA	07910	1N4152
CR1875	152-0141-02			SEMICOND DEVICE:SILICON,30V,150MA	07910	1N4152
CR1896	152-0141-02			SEMICOND DEVICE:SILICON,30V,150MA	07910	1N4152
CR1898	152-0141-02			SEMICOND DEVICE:SILICON,30V,150MA	07910	1N4152
CR1912	152-0061-00			SEMICOND DEVICE:SILICON,175V,100MA	80009	152-0061-00
CR1921	152-0141-02			SEMICOND DEVICE:SILICON,30V,150MA	07910	1N4152
CR1924	152-0141-02			SEMICOND DEVICE:SILICON,30V,150MA	07910	1N4152
CR1926	152-0141-02			SEMICOND DEVICE:SILICON,30V,150MA	07910	1N4152
CR2124	152-0141-02			SEMICOND DEVICE:SILICON,30V,150MA	07910	1N4152
CR2125	152-0141-02			SEMICOND DEVICE:SILICON,30V,150MA	07910	1N4152
CR2127	152-0141-02			SEMICOND DEVICE:SILICON,30V,150MA	07910	1N4152
CR2140	152-0141-02			SEMICOND DEVICE:SILICON,30V,150MA	07910	1N4152
CR2141	152-0141-02			SEMICOND DEVICE:SILICON,30V,150MA	07910	1N4152
CR2142	152-0141-02			SEMICOND DEVICE:SILICON,30V,150MA	07910	1N4152
CR2145	152-0141-02			SEMICOND DEVICE:SILICON,30V,150MA	07910	1N4152
CR2146	152-0141-02			SEMICOND DEVICE:SILICON,30V,150MA	07910	1N4152
CR2156	152-0141-02			SEMICOND DEVICE:SILICON,30V,150MA	07910	1N4152
CR2157	152-0141-02			SEMICOND DEVICE:SILICON,30V,150MA	07910	1N4152
CR2162	152-0141-02			SEMICOND DEVICE:SILICON,30V,150MA	07910	1N4152
CR2163	152-0141-02			SEMICOND DEVICE:SILICON,30V,150MA	07910	1N4152
CR2166	152-0141-02			SEMICOND DEVICE:SILICON,30V,150MA	07910	1N4152
CR2167	152-0141-02			SEMICOND DEVICE:SILICON,30V,150MA	07910	1N4152
CR2170	152-0141-02			SEMICOND DEVICE:SILICON,30V,150MA	07910	1N4152
CR2171	152-0141-02			SEMICOND DEVICE:SILICON,30V,150MA	07910	1N4152
CR2174	152-0141-02			SEMICOND DEVICE:SILICON,30V,150MA	07910	1N4152
CR2175	152-0141-02			SEMICOND DEVICE:SILICON,30V,150MA	07910	1N4152
CR2192	152-0141-02			SEMICOND DEVICE:SILICON,30V,150MA	07910	1N4152
CR2193	152-0141-02			SEMICOND DEVICE:SILICON,30V,150MA	07910	1N4152
CR2196	152-0141-02			SEMICOND DEVICE:SILICON,30V,150MA	07910	1N4152
CR2198	152-0141-02			SEMICOND DEVICE:SILICON,30V,150MA	07910	1N4152
CR2226	152-0141-02			SEMICOND DEVICE:SILICON,30V,150MA	07910	1N4152
CR2235	THRU					
CR2266	152-0333-00	XB140000		SEMICOND DEVICE:SILICON,55V,200MA	80009	152-0333-00
CR2331	152-0141-02			SEMICOND DEVICE:SILICON,30V,150MA	07910	1N4152
CR2414	152-0612-00			SEMICOND DEVICE:VAR V CAP,4V,17.5PF	80009	152-0612-00
CR2456	152-0612-00			SEMICOND DEVICE:VAR V CAP,4V,17.5PF	80009	152-0612-00
CR2514	152-0612-00			SEMICOND DEVICE:VAR V CAP,4V,17.5PF	80009	152-0612-00
CR2556	152-0612-00			SEMICOND DEVICE:VAR V CAP,4V,17.5PF	80009	152-0612-00
DL2400	119-0368-00			DELAY LINE,ELEC:	80009	119-0368-00
DS1001	150-0121-02			LAMP,INDICATOR:GREEN,5V,60MA	80009	150-0121-02
DS1090	150-0029-00			LAMP,INCAND:6.3V,0.20A	08806	349
DS1091	150-0029-00			LAMP,INCAND:6.3V,0.20A	08806	349
DS1092	150-0029-00			LAMP,INCAND:6.3V,0.20A	08806	349
DS1176	150-0123-01			LAMP,INCAND:14V,23MA	80009	150-0123-01
F814	159-0021-00			FUSE,CARTRIDGE:3AG,2A,250V,FAST-BLOW	71400	AGC2
F855	159-0083-00			FUSE,CARTRIDGE:0.15A,250V,FAST-BLOW	71400	AGC15-100
F1000	159-0026-00			FUSE,CARTRIDGE:3AG,3.2A,125V,SLOW-BLOW	71400	MDX3-2
J1	131-0767-08			CONNECTOR,RCPT,:PLUG-IN CKT BD,70 CONTACT	80009	131-0767-08
J2	131-0767-08			CONNECTOR,RCPT,:PLUG-IN CKT BD,70 CONTACT	80009	131-0767-08
J3	131-0767-07			CONNECTOR,RCPT,:PLUG-IN CKT BD,70 CONTACT	80009	131-0767-07
J26	131-1003-00			CONNECTOR BODY,:CKT BD MT,3 PRONG	80009	131-1003-00

http://manuals.sqhl.com

Ckt No.	Tektronix Part No.	Serial/Model No. Eff	Dscont	Name & Description	Mfr Code	Mfr Part Number
J27	131-1003-00			CONNECTOR BODY,:CKT BD MT,3 PRONG	80009	131-1003-00
J503	131-1003-00			CONNECTOR BODY,:CKT BD MT,3 PRONG	80009	131-1003-00
J508	131-1003-00			CONNECTOR BODY,:CKT BD MT,3 PRONG	80009	131-1003-00
J601	131-1003-00			CONNECTOR BODY,:CKT BD MT,3 PRONG	80009	131-1003-00
J603	131-1003-00			CONNECTOR BODY,:CKT BD MT,3 PRONG	80009	131-1003-00
J629	131-0955-00			CONNECTOR,RCPT,:BNC,FEMALE	24931	28JR200-1
J649	131-0955-00			CONNECTOR,RCPT,:BNC,FEMALE	24931	28JR200-1
J679	131-0955-00			CONNECTOR,RCPT,:BNC,FEMALE	24931	28JR200-1
J1047	131-0955-00			CONNECTOR,RCPT,:BNC,FEMALE	24931	28JR200-1
J1049	131-0955-00			CONNECTOR,RCPT,:BNC,FEMALE	24931	28JR200-1
J1050	131-0955-00			CONNECTOR,RCPT,:BNC,FEMALE	24931	28JR200-1
J1103	131-1003-00			CONNECTOR BODY,:CKT BD MT,3 PRONG	80009	131-1003-00
J1134	131-1003-00			CONNECTOR BODY,:CKT BD MT,3 PRONG	80009	131-1003-00
J1135	131-1003-00			CONNECTOR BODY,:CKT BD MT,3 PRONG	80009	131-1003-00
J2132	131-1003-00			CONNECTOR BODY,:CKT BD MT,3 PRONG	80009	131-1003-00
J2138	131-1003-00			CONNECTOR BODY,:CKT BD MT,3 PRONG	80009	131-1003-00
J2139	131-1003-00			CONNECTOR BODY,:CKT BD MT,3 PRONG	80009	131-1003-00
J2192	131-1003-00			CONNECTOR BODY,:CKT BD MT,3 PRONG	80009	131-1003-00
J2296	131-1003-00			CONNECTOR BODY,:CKT BD MT,3 PRONG	80009	131-1003-00
J2299	131-1003-00			CONNECTOR BODY,:CKT BD MT,3 PRONG	80009	131-1003-00
J2401	131-1003-00			CONNECTOR BODY,:CKT BD MT,3 PRONG	80009	131-1003-00
J2501	131-1003-00			CONNECTOR BODY,:CKT BD MT,3 PRONG	80009	131-1003-00
J2534	131-1003-00			CONNECTOR BODY,:CKT BD MT,3 PRONG	80009	131-1003-00
K1177	108-0663-00			COIL,REED SW:12V,20MA	71707	SP-12-P
K1177S1	260-1726-00			SWITCH,REED:	80009	260-1726-00
L1198	108-0646-00			COIL,RF:80UH	80009	108-0646-00
L1284	108-0605-00			COIL,TUBE DEFLE:Y AXIS ALIGNMENT	80009	108-0605-00
L1295, L1929[1]	108-0721-00			COIL,TUBE DEFL:TRACE ROTATOR	80009	108-0721-00
L1985	108-0538-00			COIL,RF:2.7UH	76493	70F276A1
L2283	108-0331-00			COIL,RF:0.75UH	80009	108-0331-00
L2386	108-0606-00			COIL,RF:50NH	80009	108-0606-00
L2396	108-0606-00			COIL,RF:50NH	80009	108-0606-00
L2441	276-0528-00			SHIELDING BEAD,:0.1UH	80009	276-0528-00
L2448	108-0579-00			TRANSFORMER,RF:120NH	80009	108-0579-00
L2519	108-0707-00			COIL,RF:150NH	80009	108-0707-00
L2541	276-0528-00			SHIELDING BEAD,:0.1UH	80009	276-0528-00
L2548	108-0579-00			TRANSFORMER,RF:120NH	80009	108-0579-00
L2595	108-0538-00			COIL,RF:2.7UH	76493	70F276A1
LR55	108-0245-00	XB020000		COIL,RF:3.9UH	80009	108-0245-00
LR193	108-0604-00	B010100	B019999	COIL,RF:3.2UH	80009	108-0604-00
LR193	108-0245-00	B020000		COIL,RF:3.9UH	80009	108-0245-00
LR195	108-0604-00	B010100	B019999	COIL,RF:3.2UH	80009	108-0604-00
LR195	108-0245-00	B020000		COIL,RF:3.9UH	80009	108-0245-00
LR198	108-0604-00	B010100	B019999	COIL,RF:3.2UH	80009	108-0604-00
LR198	108-0245-00	B020000		COIL,RF:3.9UH	80009	108-0245-00
LR2472	108-0777-00			COIL,RF:100NH	80009	108-0777-00
LR2572	108-0777-00			COIL,RF:100NH	80009	108-0777-00
P1260	131-0589-00			CONTACT,ELEC:0.46 INCH LONG	22526	47350
Q90A,B	151-0232-00			TRANSISTOR:SILICON,NPN,DUAL	12040	NS7348
Q108	151-0199-00			TRANSISTOR:SILICON,PNP	04713	MPS3640

[1]Furnished with CRT Socket Cable.

http://manuman.sqrill.com

Ckt No.	Tektronix Part No.	Serial/Model No. Eff	Dscont	Name & Description	Mfr Code	Mfr Part Number
Q132	151-0199-00			TRANSISTOR:SILICON,PNP	04713	MPS3640
Q137	151-0223-00			TRANSISTOR:SILICON,NPN	80009	151-0223-00
Q142	151-0199-00			TRANSISTOR:SILICON,PNP	04713	MPS3640
Q147	151-0223-00			TRANSISTOR:SILICON,NPN	80009	151-0223-00
Q150	151-0223-00			TRANSISTOR:SILICON,NPN	80009	151-0223-00
Q162	151-0199-00			TRANSISTOR:SILICON,PNP	04713	MPS3640
Q167	151-0223-00			TRANSISTOR:SILICON,NPN	80009	151-0223-00
Q314	151-0190-00			TRANSISTOR:SILICON,NPN	04713	2N3904
Q334	151-0190-00			TRANSISTOR:SILICON,NPN	04713	2N3904
Q336	151-0190-00			TRANSISTOR:SILICON,NPN	04713	2N3904
Q344	151-0221-00			TRANSISTOR:SILICON,PNP	07263	S24849
Q346	151-0221-00			TRANSISTOR:SILICON,PNP	07263	S24849
Q516	151-1022-00			TRANSISTOR:SILICON,JFE,SEL FROM 2N4392	80009	151-1022-00
Q539	151-0301-00			TRANSISTOR:SILICON,PNP	04713	2N2907A
Q547	151-0301-00			TRANSISTOR:SILICON,PNP	04713	2N2907A
Q551	151-0103-00			TRANSISTOR:SILICON,NPN	04713	2N2219A
Q553	151-0103-00			TRANSISTOR:SILICON,NPN	04713	2N2219A
Q558	151-0406-00			TRANSISTOR:SILICON,PNP	07263	S37880
Q560	151-0347-00			TRANSISTOR:SILICON,NPN	80009	151-0347-00
Q578	151-0406-00			TRANSISTOR:SILICON,PNP	07263	S37880
Q580	151-0347-00			TRANSISTOR:SILICON,NPN	80009	151-0347-00
Q606	151-0221-00			TRANSISTOR:SILICON,PNP	07263	S24849
Q618	151-0221-00			TRANSISTOR:SILICON,PNP	07263	S24849
Q620	151-0220-00	B010100	B139999	TRANSISTOR:SILICON,PNP	80009	151-0220-00
Q620	151-0221-00	B140000		TRANSISTOR:SILICON,PNP	07263	S24849
Q631	151-0190-00			TRANSISTOR:SILICON,NPN	04713	2N3904
Q634	151-0190-00			TRANSISTOR:SILICON,NPN	04713	2N3904
Q640	151-0220-00			TRANSISTOR:SILICON,PNP	80009	151-0220-00
Q662	151-0190-00			TRANSISTOR:SILICON,NPN	04713	2N3904
Q666	151-0190-00			TRANSISTOR:SILICON,NPN	04713	2N3904
Q672	151-0188-00			TRANSISTOR:SILICON,PNP	04713	2N3906
Q827	151-0223-00			TRANSISTOR:SILICON,NPN	80009	151-0223-00
Q829	151-0223-00			TRANSISTOR:SILICON,NPN	80009	151-0223-00
Q835	151-0334-00			TRANSISTOR:SILICON,NPN	80009	151-0334-00
Q850	151-0337-00			TRANSISTOR:SILICON,NPN	21845	93SX287
Q852	151-0276-00			TRANSISTOR:SILICON,PNP	04713	2N5087
Q860	151-0347-00			TRANSISTOR:SILICON,NPN	80009	151-0347-00
Q863	151-0347-00			TRANSISTOR:SILICON,NPN	80009	151-0347-00
Q869	151-0347-00			TRANSISTOR:SILICON,NPN	80009	151-0347-00
Q872	151-0279-00			TRANSISTOR:SILICON,NPN	07263	S25381
Q874	151-0336-00	B010100	B090758	TRANSISTOR:SILICON,NPN	21845	93SX288
Q874	151-0487-00	B090759		TRANSISTOR:SILICON,NPN	80009	151-0487-00
Q876A,B	151-0232-00			TRANSISTOR:SILICON,NPN,DUAL	12040	NS7348
Q886A,B	151-0232-00			TRANSISTOR:SILICON,NPN,DUAL	12040	NS7348
Q896	151-0228-00			TRANSISTOR:SILICON,PNP,SEL FROM 2N4888	07263	S21862
Q900	151-0347-00			TRANSISTOR:SILICON,NPN	80009	151-0347-00
Q903	151-0336-00	B010100	B090578	TRANSISTOR,SILICON,NPN	21845	93SX288
Q903	151-0487-00	B090759		TRANSISTOR,SILICON,NPN	80009	151-0487-00
Q908	151-0292-00			TRANSISTOR:SILICON,NPN	01295	TIS100
Q909	151-0292-00			TRANSISTOR:SILICON,NPN	01295	TIS100
Q910	151-0292-00			TRANSISTOR:SILICON,NPN	01295	TIS100
Q919A,B	151-0232-00			TRANSISTOR:SILICON,NPN,DUAL	12040	NS7348
Q926	151-0347-00			TRANSISTOR:SILICON,NPN	80009	151-0347-00
Q931	151-0260-02			TRANSISTOR:SILICON,NPN	04713	2N5859

http://scopes.com

Ckt No.	Tektronix Part No.	Serial/Model No. Eff	Dscont	Name & Description	Mfr Code	Mfr Part Number
Q933	151-0337-00	B010100	B090758	TRANSISTOR:SILICON,NPN	21845	93SX287
Q933	151-0487-00	B090759		TRANSISTOR:SILICON,NPN	80009	151-0487-00
Q936A,B	151-0232-00			TRANSISTOR:SILICON,NPN,DUAL	12040	NS7348
Q943A,B	151-0232-00			TRANSISTOR:SILICON,NPN,DUAL	12040	NS7348
Q952	151-0134-00			TRANSISTOR:SILICON,PNP	04713	2N2905A
Q956	151-0260-02			TRANSISTOR:SILICON,NPN	04713	2N5859
Q958	151-0337-00	B010100	B090758	TRANSISTOR:SILICON,NPN	21845	93SX287
Q958	151-0487-00	B090759		TRANSISTOR:SILICON,NPN	80009	151-0487-00
Q964A,B	151-0232-00			TRANSISTOR:SILICON,NPN,DUAL	12040	NS7348
Q985	151-0136-00			TRANSISTOR:SILICON,NPN	02735	35495
Q988	151-0337-00			TRANSISTOR:SILICON,NPN	21845	93SX287
Q1105	151-0190-00			TRANSISTOR:SILICON,NPN	04713	2N3904
Q1111	151-0192-00			TRANSISTOR:SILICON,NPN,SEL FROM MPS6521	80009	151-0192-00
Q1113	151-0347-00			TRANSISTOR:SILICON,NPN	80009	151-0347-00
Q1122	151-0406-00			TRANSISTOR:SILICON,PNP	07263	S37880
Q1127	151-0188-00			TRANSISTOR:SILICON,PNP	04713	2N3906
Q1136	151-0190-00			TRANSISTOR:SILICON,NPN	04713	2N3904
Q1140	151-0188-00			TRANSISTOR:SILICON,PNP	04713	2N3906
Q1145	151-0190-00			TRANSISTOR:SILICON,NPN	04713	2N3904
Q1150	151-0188-00			TRANSISTOR:SILICON,PNP	04713	2N3906
Q1155	151-0188-00			TRANSISTOR:SILICON,PNP	04713	2N3906
Q1164	151-0406-00			TRANSISTOR:SILICON,PNP	07263	S37880
Q1167	151-0347-00			TRANSISTOR:SILICON,NPN	80009	151-0347-00
Q1184	151-0126-00			TRANSISTOR:SILICON,NPN	07263	2N2484
Q1187	151-0188-00			TRANSISTOR:SILICON,PNP	04713	2N3906
Q1190	151-0136-00			TRANSISTOR:SILICON,NPN	02735	35495
Q1195	151-0140-00			TRANSISTOR:SILICON,NPN	02735	36568
Q1280	151-0188-00			TRANSISTOR:SILICON,PNP	04713	2N3906
Q1287	151-0190-00			TRANSISTOR:SILICON,NPN	04713	2N3904
Q1416	151-0223-00			TRANSISTOR:SILICON,NPN	80009	151-0223-00
Q1426	151-0342-00			TRANSISTOR:SILICON,PNP	07263	2N4249
Q1428	151-0342-00			TRANSISTOR:SILICON,PNP	07263	2N4249
Q1440	151-0190-00			TRANSISTOR:SILICON,NPN	04713	2N3904
Q1446	151-0190-00			TRANSISTOR:SILICON,NPN	04713	2N3904
Q1450	151-0410-00			TRANSISTOR:SILICON,PNP	04713	SPS6765
Q1453	151-0410-00			TRANSISTOR:SILICON,PNP	04713	SPS6765
Q1475	151-0410-00			TRANSISTOR:SILICON,PNP	04713	SPS6765
Q1478	151-0192-00			TRANSISTOR:SILICON,NPN,SEL FROM MPS6521	80009	151-0192-00
Q1481	151-0410-00			TRANSISTOR:SILICON,PNP	04713	SPS6765
Q1485	151-0410-00			TRANSISTOR:SILICON,PNP	04713	SPS6765
Q1493	151-0192-00			TRANSISTOR:SILICON,NPN,SEL FROM MPS6521	80009	151-0192-00
Q1513	151-0410-00			TRANSISTOR:SILICON,PNP	04713	SPS6765
Q1518	151-0508-00			TRANSISTOR:SILICON,NPN,UNIJUNCTION	03508	X13T520
Q1524	151-0342-00			TRANSISTOR:SILICON,PNP	07263	2N4249
Q1539	151-0341-00			TRANSISTOR:SILICON,NPN	07263	2N3565
Q1541	151-0341-00			TRANSISTOR:SILICON,NPN	07263	2N3565
Q1553	151-0341-00			TRANSISTOR:SILICON,NPN	07263	2N3565
Q1564	151-0341-00			TRANSISTOR:SILICON,NPN	07263	2N3565
Q1569	151-0341-00			TRANSISTOR:SILICON,NPN	07263	2N3565
Q1576	151-0341-00			TRANSISTOR:SILICON,NPN	07263	2N3565
Q1585	151-0341-00			TRANSISTOR:SILICON,NPN	07263	2N3565
Q1587	151-0341-00			TRANSISTOR:SILICON,NPN	07263	2N3565
Q1595	151-0341-00			TRANSISTOR:SILICON,NPN	07263	2N3565

http://manuals.sqlit.com

Ckt No.	Tektronix Part No.	Serial/Model No. Eff	Dscont	Name & Description	Mfr Code	Mfr Part Number
Q1613	151-0341-00	B010100	B149999X	TRANSISTOR:SILICON,NPN	07263	2N3565
Q1621	151-0508-00			TRANSISTOR:SILICON,NPN,UNIJUNCTION	03508	X13T520
Q1625	151-0341-00			TRANSISTOR:SILICON,NPN	07263	2N3565
Q1631	151-0508-00			TRANSISTOR:SILICON,NPN,UNIJUNCTION	03508	X13T520
Q1644	151-0341-00			TRANSISTOR:SILICON,NPN	07263	2N3565
Q1652	151-0341-00			TRANSISTOR:SILICON,NPN	07263	2N3565
Q1661	151-0342-00			TRANSISTOR:SILICON,PNP	07263	2N4249
Q1667	151-0342-00			TRANSISTOR:SILICON,PNP	07263	2N4249
Q1673	151-0342-00			TRANSISTOR:SILICON,PNP	07263	2N4249
Q1686	151-0342-00			TRANSISTOR:SILICON,PNP	07263	2N4249
Q1692	151-0342-00			TRANSISTOR:SILICON,PNP	07263	2N4249
Q1697	151-0342-00			TRANSISTOR:SILICON,PNP	07263	2N4249
Q1701	151-0410-00			TRANSISTOR:SILICON,PNP	04713	SPS6765
Q1704	151-0410-00			TRANSISTOR:SILICON,PNP	04713	SPS6765
Q1708	151-0347-00			TRANSISTOR:SILICON,NPN	80009	151-0347-00
Q1711	151-0347-00			TRANSISTOR:SILICON,NPN	80009	151-0347-00
Q1718	151-0188-00			TRANSISTOR:SILICON,PNP	04713	2N3906
Q1723	151-0347-00			TRANSISTOR:SILICON,NPN	80009	151-0347-00
Q1728	151-0444-00			TRANSISTOR:SILICON,NPN	80009	151-0444-00
Q1734	151-0444-00			TRANSISTOR:SILICON,NPN	80009	151-0444-00
Q1739	151-0444-00			TRANSISTOR:SILICON,NPN	80009	151-0444-00
Q1743	151-0444-00			TRANSISTOR:SILICON,NPN	80009	151-0444-00
Q1761	151-0341-00			TRANSISTOR:SILICON,NPN	07263	2N3565
Q1775	151-0342-00			TRANSISTOR:SILICON,PNP	07263	2N4249
Q1788	151-0410-00			TRANSISTOR:SILICON,PNP	04713	SPS6765
Q1790	151-0410-00			TRANSISTOR:SILICON,PNP	04713	SPS6765
Q1795	151-0347-00			TRANSISTOR:SILICON,NPN	80009	151-0347-00
Q1798	151-0347-00			TRANSISTOR:SILICON,NPN	80009	151-0347-00
Q1805	151-0341-00			TRANSISTOR:SILICON,NPN	07263	2N3565
Q1810	151-0341-00			TRANSISTOR:SILICON,NPN	07263	2N3565
Q1825	151-0410-00			TRANSISTOR:SILICON,PNP	04713	SPS6765
Q1828	151-0347-00			TRANSISTOR:SILICON,NPN	80009	151-0347-00
Q1835	151-0347-00			TRANSISTOR:SILICON,NPN	80009	151-0347-00
Q1844	151-0341-00			TRANSISTOR:SILICON,NPN	07263	2N3565
Q1847	151-0341-00			TRANSISTOR:SILICON,NPN	07263	2N3565
Q1859	151-0410-00			TRANSISTOR:SILICON,PNP	04713	SPS6765
Q1862	151-0347-00			TRANSISTOR:SILICON,NPN	80009	151-0347-00
Q1880	151-0410-00			TRANSISTOR:SILICON,PNP	04713	SPS6765
Q1883	151-0347-00			TRANSISTOR:SILICON,NPN	80009	151-0347-00
Q1903	151-0410-00			TRANSISTOR:SILICON,PNP	04713	SPS6765
Q1906	151-0347-00			TRANSISTOR:SILICON,NPN	80009	151-0347-00
Q1925	151-0410-00			TRANSISTOR:SILICON,PNP	04713	SPS6765
Q1928	151-0347-00			TRANSISTOR:SILICON,NPN	80009	151-0347-00
Q2108	151-0223-00			TRANSISTOR:SILICON,NPN	80009	151-0223-00
Q2112	151-0221-00			TRANSISTOR:SILICON,PNP	07263	S24849
Q2138	151-0188-00			TRANSISTOR:SILICON,PNP	04713	2N3906
Q2153	151-0192-00			TRANSISTOR:SILICON,NPN,SEL FROM MPS6521	80009	151-0192-00
Q2159	151-0190-00			TRANSISTOR:SILICON,NPN	04713	2N3904
Q2215A,B	151-0232-00			TRANSISTOR:SILICON,NPN,DUAL	12040	NS7348
Q2223	151-0190-00			TRANSISTOR:SILICON,NPN	04713	2N3904
Q2225	151-0188-00			TRANSISTOR:SILICON,PNP	04713	2N3906
Q2229	151-0190-00			TRANSISTOR:SILICON,NPN	04713	2N3904
Q2240	151-0190-00			TRANSISTOR:SILICON,NPN	04713	2N3904

http://manuals.sqlink.com

Ckt No.	Tektronix Part No.	Serial/Model No. Eff	Dscont	Name & Description	Mfr Code	Mfr Part Number
Q2286	151-0188-00			TRANSISTOR:SILICON,PNP	04713	2N3906
Q2287	151-0188-00			TRANSISTOR:SILICON,PNP	04713	2N3906
Q2296	151-0188-00			TRANSISTOR:SILICON,PNP	04713	2N3906
Q2299	151-0188-00			TRANSISTOR:SILICON,PNP	04713	2N3906
Q2365A,B	151-0232-00			TRANSISTOR:SILICON,NPN,DUAL	12040	NS7348
Q2386	151-0447-00			TRANSISTOR:SILICON,NPN	80009	151-0447-00
Q2390	151-0190-00			TRANSISTOR:SILICON,NPN	04713	2N3904
Q2396	151-0447-00			TRANSISTOR:SILICON,NPN	80009	151-0447-00
Q2405	151-0447-00			TRANSISTOR:SILICON,NPN	80009	151-0447-00
Q2423	151-0302-00			TRANSISTOR:SILICON,NPN	04713	2N2222A
Q2427	151-0302-00			TRANSISTOR:SILICON,NPN	04713	2N2222A
Q2430	151-0192-00			TRANSISTOR:SILICON,NPN,SEL FROM MPS6521	80009	151-0192-00
Q2439	151-1022-00			TRANSISTOR:SILICON,JFE,SEL FROM 2N4392	80009	151-1022-00
Q2441	151-0271-00			TRANSISTOR:SILICON,PNP	01295	SKA4504
Q2455	151-0448-00			TRANSISTOR:SILICON,NPN	80009	151-0448-00
Q2468	151-0451-00			TRANSISTOR:SILICON,NPN	80009	151-0451-00
Q2505	151-0447-00			TRANSISTOR:SILICON,NPN	80009	151-0447-00
Q2530	151-0192-00			TRANSISTOR:SILICON,NPN,SEL FROM MPS6521	80009	151-0192-00
Q2541	151-0271-00			TRANSISTOR:SILICON,PNP	01295	SKA4504
Q2552	151-0301-00			TRANSISTOR:SILICON,PNP	04713	2N2907A
Q2555	151-0448-00			TRANSISTOR:SILICON,NPN	80009	151-0448-00
Q2568	151-0451-00			TRANSISTOR:SILICON,NPN	80009	151-0451-00
R12	321-0260-00			RES.,FXD,FILM:4.99K OHM,1%,0.125W	75042	CEAT0-4991F
R14	321-0260-00			RES.,FXD,FILM:4.99K OHM,1%,0.125W	75042	CEAT0-4991F
R20	315-0103-00			RES.,FXD,COMP:10K OHM,5%,0.25W	01121	CB1035
R21	315-0103-00			RES.,FXD,COMP:10K OHM,5%,0.25W	01121	CB1035
R26	315-0122-00			RES.,FXD,COMP:1.2K OHM,5%,0.25W	01121	CB1225
R28	315-0510-00			RES.,FXD,COMP:51 OHM,5%,0.25W	01121	CB5105
R29	315-0510-00			RES.,FXD,COMP:51 OHM,5%,0.25W	01121	CB5105
R31	315-0122-00			RES.,FXD,COMP:1.2K OHM,5%,0.25W	01121	CB1225
R33	315-0682-00			RES.,FXD,COMP:6.8K OHM,5%,0.25W	01121	CB6825
R34	315-0122-00			RES.,FXD,COMP:1.2K OHM,5%,0.25W	01121	CB1225
R35	315-0122-00			RES.,FXD,COMP:1.2K OHM,5%,0.25W	01121	CB1225
R36	321-0231-00			RES.,FXD,FILM:2.49K OHM,1%,0.125W	75042	CEAT0-2491F
R37	315-0152-00			RES.,FXD,COMP:1.5K OHM,5%,0.25W	01121	CB1525
R38	315-0152-00			RES.,FXD,COMP:1.5K OHM,5%,0.25W	01121	CB1525
R39	315-0152-00			RES.,FXD,COMP:1.5K OHM,5%,0.25W	01121	CB1525
R42	315-0105-00			RES.,FXD,COMP:1M OHM,5%,0.25W	01121	CB1055
R44	315-0152-00			RES.,FXD,COMP:1.5K OHM,5%,0.25W	01121	CB1525
R47	315-0243-00			RES.,FXD,COMP:24K OHM,5%,0.25W	01121	CB2435
R48	315-0152-00			RES.,FXD,COMP:1.5K OHM,5%,0.25W	01121	CB1525
R49	315-0104-00			RES.,FXD,COMP:100K OHM,5%,0.25W	01121	CB1045
R50	315-0223-00			RES.,FXD,COMP:22K OHM,5%,0.25W	01121	CB2235
R51	321-0193-00			RES.,FXD,FILM:1K OHM,1%,0.125W	75042	CEAT0-1001F
R53	315-0223-00			RES.,FXD,COMP:22K OHM,5%,0.25W	01121	CB2235
R54	321-0193-00			RES.,FXD,FILM:1K OHM,1%,0.125W	75042	CEAT0-1001F
R55	315-0470-00	B010100	B019999X	RES.,FXD,COMP:47 OHM,5%,0.25W	01121	CB4705
R56	315-0471-00	B010100	B019999	RES.,FXD,COMP:470 OHM,5%,0.25W	01121	CB4715
R56	321-0169-00	B020000		RES.,FXD,FILM:562 OHM,1%,0.125W	75042	CEAT0-5620F
R57	315-0682-00	B010100	B019999	RES.,FXD,COMP:6.8K OHM,5%,0.25W	01121	CB6825
R57	321-0266-00	B020000		RES.,FXD,FILM:5.76K OHM,1%,0.125W	75042	CEAT0-5761F
R58	315-0101-00			RES.,FXD,COMP:100 OHM,5%,0.25W	01121	CB1015

http://manuals.hill.com

Ckt No.	Tektronix Part No.	Serial/Model No. Eff	Dscont	Name & Description	Mfr Code	Mfr Part Number
R59	315-0103-00	B010100	B019999	RES.,FXD,COMP:10K OHM,5%,0.25W	01121	CB1035
R59	321-0282-00	B020000		RES.,FXD,FILM:8.45K OHM,1%,0.125W	75042	CEAT0-8451F
R61	315-0512-00			RES.,FXD,COMP:5.1K OHM,5%,0.25W	01121	CB5125
R62	315-0103-00			RES.,FXD,COMP:10K OHM,5%,0.25W	01121	CB1035
R63	315-0102-00			RES.,FXD,COMP:1K OHM,5%,0.25W	01121	CB1025
R67	315-0512-00			RES.,FXD,COMP:5.1K OHM,5%,0.25W	01121	CB5125
R74	315-0510-00			RES.,FXD,COMP:51 OHM,5%,0.25W	01121	CB5105
R76	315-0222-00			RES.,FXD,COMP:2.2K OHM,5%,0.25W	01121	CB2225
R77	315-0362-00			RES.,FXD,COMP:3.6K OHM,5%,0.25W	01121	CB3625
R78	315-0392-00			RES.,FXD,COMP:3.9K OHM,5%,0.25W	01121	CB3925
R80	321-0258-00			RES.,FXD,FILM:4.75K OHM,1%,0.125W	75042	CEAT0-4751F
R82	315-0510-00			RES.,FXD,COMP:51 OHM,5%,0.25W	01121	CB5105
R83	315-0510-00			RES.,FXD,COMP:51 OHM,5%,0.25W	01121	CB5105
R84	315-0510-00			RES.,FXD,COMP:51 OHM,5%,0.25W	01121	CB5105
R85	315-0471-00			RES.,FXD,COMP:470 OHM,5%,0.25W	01121	CB4715
R86	315-0100-00			RES.,FXD,COMP:10 OHM,5%,0.25W	01121	CB1005
R88	321-0230-00			RES.,FXD,FILM:2.43K OHM,1%,0.125W	75042	CEAT0-2431F
R89	315-0910-00			RES.,FXD,COMP:91 OHM,5%,0.25W	01121	CB9105
R90	315-0362-00			RES.,FXD,COMP:3.6K OHM,5%,0.25W	01121	CB3625
R92	321-0202-00			RES.,FXD,FILM:1.24K OHM,1%,0.125W	75042	CEAT0-1241F
R93	315-0102-00			RES.,FXD,COMP:1K OHM,5%,0.25W	01121	CB1025
R95	315-0152-00			RES.,FXD,COMP:1.5K OHM,5%,0.25W	01121	CB1525
R96	315-0511-00			RES.,FXD,COMP:510 OHM,5%,0.25W	01121	CB5115
R98	315-0511-00			RES.,FXD,COMP:510 OHM,5%,0.25W	01121	CB5115
R99	315-0221-00			RES.,FXD,COMP:220 OHM,5%,0.25W	01121	CB2215
R101	315-0302-00			RES.,FXD,COMP:3K OHM,5%,0.25W	01121	CB3025
R104	315-0103-00			RES.,FXD,COMP:10K OHM,5%,0.25W	01121	CB1035
R105	315-0472-00			RES.,FXD,COMP:4.7K OHM,5%,0.25W	01121	CB4725
R106	315-0273-00			RES.,FXD,COMP:27K OHM,5%,0.25W	01121	CB2735
R109	321-0243-00			RES.,FXD,FILM:3.32K OHM,1%,0.125W	75042	CEAT0-3321F
R110	321-0097-00			RES.,FXD,FILM:100 OHM,1%,0.125W	75042	CEAT0-1000F
R112	321-0097-00			RES.,FXD,FILM:100 OHM,1%,0.125W	75042	CEAT0-1000F
R115	317-0392-00	XB130000		RES.,FXD,COMP:3.9K OHM,5%,0.125W	01121	BB3925
R123	315-0102-00			RES.,FXD,COMP:1K OHM,5%,0.25W	01121	CB1025
R124	315-0511-00			RES.,FXD,COMP:510 OHM,5%,0.25W	01121	CB5115
R125	315-0102-00			RES.,FXD,COMP:1K OHM,5%,0.25W	01121	CB1025
R126	315-0102-00			RES.,FXD,COMP:1K OHM,5%,0.25W	01121	CB1025
R130	315-0102-00			RES.,FXD,COMP:1K OHM,5%,0.25W	01121	CB1025
R132	315-0222-00			RES.,FXD,COMP:2.2K OHM,5%,0.25W	01121	CB2225
R133	315-0102-00			RES.,FXD,COMP:1K OHM,5%,0.25W	01121	CB1025
R134	315-0821-00			RES.,FXD,COMP:820 OHM,5%,0.25W	01121	CB8215
R135	315-0123-00			RES.,FXD,COMP:12K OHM,5%,0.25W	01121	CB1235
R136	315-0681-00			RES.,FXD,COMP:680 OHM,5%,0.25W	01121	CB6815
R137	315-0221-00			RES.,FXD,COMP:220 OHM,5%,0.25W	01121	CB2215
R138	315-0472-00			RES.,FXD,COMP:4.7K OHM,5%,0.25W	01121	CB4725
R140	315-0391-00			RES.,FXD,COMP:390 OHM,5%,0.25W	01121	CB3915
R141	315-0122-00			RES.,FXD,COMP:1.2K OHM,5%,0.25W	01121	CB1225
R142	315-0222-00			RES.,FXD,COMP:2.2K OHM,5%,0.25W	01121	CB2225
R143	315-0102-00			RES.,FXD,COMP:1K OHM,5%,0.25W	01121	CB1025
R144	315-0821-00			RES.,FXD,COMP:820 OHM,5%,0.25W	01121	CB8215
R145	315-0123-00			RES.,FXD,COMP:12K OHM,5%,0.25W	01121	CB1235
R146	315-0681-00			RES.,FXD,COMP:680 OHM,5%,0.25W	01121	CB6815
R147	315-0181-00			RES.,FXD,COMP:180 OHM,5%,0.25W	01121	CB1815
R148	315-0472-00			RES.,FXD,COMP:4.7K OHM,5%,0.25W	01121	CB4725

http://manuals.hpmuseum.com

Ckt No.	Tektronix Part No.	Serial/Model No. Eff	Dscont	Name & Description	Mfr Code	Mfr Part Number
R149	315-0100-00			RES.,FXD,COMP:10 OHM,5%,0.25W	01121	CB1005
R150	315-0103-00			RES.,FXD,COMP:10K OHM,5%,0.25W	01121	CB1035
R152	315-0101-00			RES.,FXD,COMP:100 OHM,5%,0.25W	01121	CB1015
R154	315-0223-00			RES.,FXD,COMP:22K OHM,5%,0.25W	01121	CB2235
R155	315-0391-00			RES.,FXD,COMP:390 OHM,5%,0.25W	01121	CB3915
R157	315-0102-00			RES.,FXD,COMP:1K OHM,5%,0.25W	01121	CB1025
R159	315-0510-00			RES.,FXD,COMP:51 OHM,5%,0.25W	01121	CB5105
R160	315-0391-00			RES.,FXD,COMP:390 OHM,5%,0.25W	01121	CB3915
R161	315-0122-00			RES.,FXD,COMP:1.2K OHM,5%,0.25W	01121	CB1225
R162	315-0222-00			RES.,FXD,COMP:2.2K OHM,5%,0.25W	01121	CB2225
R163	315-0102-00			RES.,FXD,COMP:1K OHM,5%,0.25W	01121	CB1025
R164	315-0821-00			RES.,FXD,COMP:820 OHM,5%,0.25W	01121	CB8215
R165	315-0123-00			RES.,FXD,COMP:12K OHM,5%,0.25W	01121	CB1235
R166	315-0681-00			RES.,FXD,COMP:680 OHM,5%,0.25W	01121	CB6815
R168	315-0472-00			RES.,FXD,COMP:4.7K OHM,5%,0.25W	01121	CB4725
R301	307-0106-00			RES.,FXD,COMP:4.7 OHM,5%,0.25W	01121	CB47G5
R303	307-0106-00			RES.,FXD,COMP:4.7 OHM,5%,0.25W	01121	CB47G5
R305	307-0103-00			RES.,FXD,COMP:2.7 OHM,5%,0.25W	01121	CB27G5
R307	321-0069-00			RES.,FXD,FILM:51.1 OHM,1%,0.125W	75042	CEAT0-51R10F
R308	321-0069-00			RES.,FXD,FILM:51.1 OHM,1%,0.125W	75042	CEAT0-51R10F
R310	315-0103-00			RES.,FXD,COMP:10K OHM,5%,0.25W	01121	CB1035
R312	315-0562-00			RES.,FXD,COMP:5.6K OHM,5%,0.25W	01121	CB5625
R314	315-0103-00			RES.,FXD,COMP:10K OHM,5%,0.25W	01121	CB1035
R315	315-0513-00			RES.,FXD,COMP:51K OHM,5%,0.25W	01121	CB5135
R317	321-0069-00			RES.,FXD,FILM:51.1 OHM,1%,0.125W	75042	CEAT0-51R10F
R319	321-0069-00			RES.,FXD,FILM:51.1 OHM,1%,0.125W	75042	CEAT0-51R10F
R320	321-0218-00			RES.,FXD,FILM:1.82K OHM,1%,0.125W	75042	CEAT0-1821F
R321	321-0061-00			RES.,FXD,FILM:42.2 OHM,1%,0.125W	75042	CEAT0-42R20F
R322	315-0101-00			RES.,FXD,COMP:100 OHM,5%,0.25W	01121	CB1015
R323	321-0061-00			RES.,FXD,FILM:42.2 OHM,1%,0.125W	75042	CEAT0-42R20F
R324	322-0184-00			RES.,FXD,FILM:806 OHM,1%,0.25W	75042	CEBT0-8060F
R326	321-0061-00			RES.,FXD,FILM:42.2 OHM,1%,0.125W	75042	CEAT0-42R20F
R327	322-0184-00			RES.,FXD,FILM:806 OHM,1%,0.25W	75042	CEBT0-8060F
R328	321-0061-00			RES.,FXD,FILM:42.2 OHM,1%,0.125W	75042	CEAT0-42R20F
R329	315-0101-00			RES.,FXD,COMP:100 OHM,5%,0.25W	01121	CB1015
R330	321-0049-00			RES.,FXD,FILM:31.6 OHM,1%,0.125W	75042	CEAT0-31R60F
R332	321-0220-00			RES.,FXD,FILM:1.91K OHM,1%,0.125W	75042	CEAT0-1911F
R333	321-0143-00			RES.,FXD,FILM:301 OHM,1%,0.125W	75042	CEAT0-3010F
R334	321-0082-00			RES.,FXD,FILM:69.8 OHM,1%,0.125W	75042	CEAT0-69R80F
R335	321-0049-00			RES.,FXD,FILM:31.6 OHM,1%,0.125W	75042	CEAT0-31R60F
R336	321-0129-00			RES.,FXD,FILM:215 OHM,1%,0.125W	75042	CEAT0-2150F
R337	321-0129-00			RES.,FXD,FILM:215 OHM,1%,0.125W	75042	CEAT0-2150F
R338	321-0069-00			RES.,FXD,FILM:51.1 OHM,1%,0.125W	75042	CEAT0-51R10F
R339	321-0069-00			RES.,FXD,FILM:51.1 OHM,1%,0.125W	75042	CEAT0-51R10F
R340	321-0214-00			RES.,FXD,FILM:1.65K OHM,1%,0.125W	75042	CEAT0-1651F
R341	315-0680-00			RES.,FXD,COMP:68 OHM,5%,0.25W	01121	CB6805
R342	315-0331-00			RES.,FXD,COMP:330 OHM,5%,0.25W	01121	CB3315
R344	321-0040-00			RES.,FXD,FILM:25.5 OHM,1%,0.125W	75042	CEAT0-25R5F
R345	315-0561-00			RES.,FXD,COMP:560 OHM,5%,0.25W	01121	CB5615
R346	321-0040-00			RES.,FXD,FILM:25.5 OHM,1%,0.125W	75042	CEAT0-25R5F
R348	315-0331-00			RES.,FXD,COMP:330 OHM,5%,0.25W	01121	CB3315
R349	315-0680-00			RES.,FXD,COMP:68 OHM,5%,0.25W	01121	CB6805
R350	321-0214-00			RES.,FXD,FILM:1.65K OHM,1%,0.125W	75042	CEAT0-1651F

http://manuals.tar.sqhilltop.com

Ckt No.	Tektronix Part No.	Serial/Model No. Eff	Dscont	Name & Description	Mfr Code	Mfr Part Number
R352	315-0430-00			RES.,FXD,COMP:43 OHM,5%,0.25W	01121	CB4305
R501	321-1068-01			RES.,FXD,FILM:50.5 OHM,0.5%,0.125W	75042	CEAT0-50R50D
R502	315-0100-00			RES.,FXD,COMP:10 OHM,5%,0.25W	01121	CB1005
R503	321-1068-01			RES.,FXD,FILM:50.5 OHM,0.5%,0.125W	75042	CEAT0-50R50D
R505	321-0291-00	B010100	B069999	RES.,FXD,FILM:10.5K OHM,1%,0.125W	75042	CEAT0-1052F
R505	321-0297-00	B070000		RES.,FXD,FILM:12.1K OHM,1%,0.125W	75042	CEAT0-1212F
R506	321-0069-00			RES.,FXD,FILM:51.1 OHM,1%,0.125W	75042	CEAT0-51R10F
R508	321-0184-00			RES.,FXD,FILM:806 OHM,1%,0.125W	75042	CEAT0-8060F
R509	321-0069-00			RES.,FXD,FILM:51.1 OHM,1%,0.125W	75042	CEAT0-51R10F
R511	321-0155-00			RES.,FXD,FILM:402 OHM,1%,0.125W	75042	CEAT0-4020F
R512	311-1224-00			RES.,VAR,NONWIR:500 OHM,20%,0.50W	80294	3389F-P31-501
R513	321-0150-00			RES.,FXD,FILM:357 OHM,1%,0.125W	75042	CEAT0-3570F
R514	323-0253-00			RES.,FXD,FILM:4.22K OHM,1%,0.50W	75042	CECT0-4221F
R515	323-0253-00			RES.,FXD,FILM:4.22K OHM,1%,0.50W	75042	CECT0-4221F
R516	315-0151-00			RES.,FXD,COMP:150 OHM,5%,0.25W	01121	CB1515
R517	321-0212-00			RES.,FXD,FILM:1.58K OHM,1%,0.125W	75042	CEAT0-1581F
R518	315-0683-00			RES.,FXD,COMP:68K OHM,5%,0.25W	01121	CB6835
R519	321-0119-00			RES.,FXD,FILM:169 OHM,(NOM VALUE),SEL	75042	CEAT0-1690F
R520	315-0104-00			RES.,FXD,COMP:100K OHM,5%,0.25W	01121	CB1045
R521	321-0261-00			RES.,FXD,FILM:5.11K OHM,1%,0.125W	75042	CEAT0-5111F
R522	321-0261-00			RES.,FXD,FILM:5.11K OHM,1%,0.125W	75042	CEAT0-5111F
R524	321-0236-00			RES.,FXD,FILM:2.8K OHM,1%,0.125W	75042	CEAT0-2801F
R525	311-1223-00			RES.,VAR,NONWIR:250 OHM,10%,0.50W	80294	3389F-P32-251
R526	321-0236-00			RES.,FXD,FILM:2.8K OHM,1%,0.125W	75042	CEAT0-2801F
R529	315-0473-00			RES.,FXD,COMP:47K OHM,5%,0.25W	01121	CB4735
R531	323-0253-00			RES.,FXD,FILM:4.22K OHM,1%,0.50W	75042	CECT0-4221F
R532	323-0253-00			RES.,FXD,FILM:4.22K OHM,1%,0.50W	75042	CECT0-4221F
R534	321-0269-00			RES.,FXD,FILM:6.19K OHM,1%,0.125W	75042	CEAT0-6191F
R535	311-1225-00			RES.,VAR,NONWIR:1K OHM,20%,0.50W	80294	3389F-P31-102
R536	321-0269-00			RES.,FXD,FILM:6.19K OHM,1%,0.125W	75042	CEAT0-6191F
R540	321-0236-00			RES.,FXD,FILM:2.8K OHM,1%,0.125W	75042	CEAT0-2801F
R542	315-0300-00			RES.,FXD,COMP:30 OHM,5%,0.25W	01121	CB3005
R543	321-0193-00			RES.,FXD,FILM:1K OHM,1%,0.125W	75042	CEAT0-1001F
R544	315-0300-00			RES.,FXD,COMP:30 OHM,5%,0.25W	01121	CB3005
R548	321-0236-00			RES.,FXD,FILM:2.8K OHM,1%,0.125W	75042	CEAT0-2801F
R549	315-0102-00			RES.,FXD,COMP:1K OHM,5%,0.25W	01121	CB1025
R551	308-0243-00			RES.,FXD,WW:240 OHM,5%,3W	91637	RS2B-B240R0J
R555	315-0470-00			RES.,FXD,COMP:47 OHM,5%,0.25W	01121	CB4705
R556	301-0393-00			RES.,FXD,COMP:39K OHM,5%,0.50W	01121	EB3935
R558	323-0231-00			RES.,FXD,FILM:2.49K OHM,1%,0.50W	75042	CECT0-2491F
R559	315-0100-00			RES.,FXD,COMP:10 OHM,5%,0.25W	01121	CB1005
R560	315-0104-00			RES.,FXD,COMP:100K OHM,5%,0.25W	01121	CB1045
R561	315-0100-00			RES.,FXD,COMP:10 OHM,5%,0.25W	01121	CB1005
R562	323-0114-00			RES.,FXD,FILM:150 OHM,1%,0.50W	75042	CECT0-1500F
R563	323-0066-00			RES.,FXD,FILM:47.5 OHM,1%,0.50W	75042	CECT0-47R50F
R565	315-0101-00			RES.,FXD,COMP:100 OHM,5%,0.25W	01121	CB1015
R566	323-0301-00			RES.,FXD,FILM:13.3K OHM,1%,0.50W	75042	CECT0-1332F
R567	323-0300-00			RES.,FXD,FILM:13K OHM,1%,0.50W	75042	CECT0-1302F
R569	321-0143-00			RES.,FXD,FILM:301 OHM,1%,0.125W	75042	CEAT0-3010F
R570	321-0314-00			RES.,FXD,FILM:18.2K OHM,1%,0.125W	75042	CEAT0-1822F
R571	321-0246-00			RES.,FXD,FILM:3.57K OHM,1%,0.125W	75042	CEAT0-3571F
R573	321-0273-00			RES.,FXD,FILM:6.81K OHM,1%,0.125W	75042	CEAT0-6811F
R574	323-0352-00			RES.,FXD,FILM:45.3K OHM,1%,0.50W	75042	CECT0-4532F

http://manuals.sqhl.com

Ckt No.	Tektronix Part No.	Serial/Model No. Eff	Dscont	Name & Description	Mfr Code	Mfr Part Number
R575	315-0470-00			RES.,FXD,COMP:47 OHM,5%,0.25W	01121	CB4705
R576	301-0393-00			RES.,FXD,COMP:39K OHM,5%,0.50W	01121	EB3935
R578	323-0231-00			RES.,FXD,FILM:2.49K OHM,1%,0.50W	75042	CECT0-2491F
R579	315-0100-00			RES.,FXD,COMP:10 OHM,5%,0.25W	01121	CB1005
R580	315-0104-00			RES.,FXD,COMP:100K OHM,5%,0.25W	01121	CB1045
R581	315-0100-00			RES.,FXD,COMP:10 OHM,5%,0.25W	01121	CB1005
R582	323-0114-00			RES.,FXD,FILM:150 OHM,1%,0.50W	75042	CECT0-1500F
R583	323-0066-00			RES.,FXD,FILM:47.5 OHM,1%,0.50W	75042	CECT0-47R50F
R584	315-0684-00			RES.,FXD,COMP:680K OHM,5%,0.25W	01121	CB6845
R585	315-0101-00			RES.,FXD,COMP:100 OHM,5%,0.25W	01121	CB1015
R586	323-0301-00			RES.,FXD,FILM:13.3K OHM,1%,0.50W	75042	CECT0-1332F
R587	323-0300-00			RES.,FXD,FILM:13K OHM,1%,0.50W	75042	CECT0-1302F
R589	321-0143-00			RES.,FXD,FILM:301 OHM,1%,0.125W	75042	CEAT0-3010F
R593	315-0100-00			RES.,FXD,COMP:10 OHM,5%,0.25W	01121	CB1005
R595	307-0106-00			RES.,FXD,COMP:4.7 OHM,5%,0.25W	01121	CB47G5
R597	315-0100-00			RES.,FXD,COMP:10 OHM,5%,0.25W	01121	CB1005
R598	307-0106-00			RES.,FXD,COMP:4.7 OHM,5%,0.25W	01121	CB47G5
R599	307-0103-00			RES.,FXD,COMP:2.7 OHM,5%,0.25W	01121	CB27G5
R602	315-0101-00			RES.,FXD,COMP:100 OHM,5%,0.25W	01121	CB1015
R605	315-0561-00			RES.,FXD,COMP:560 OHM,5%,0.25W	01121	CB5615
R607	321-0020-00			RES.,FXD,FILM:15.8 OHM,1%,0.125W	75042	CEAT0-15R80F
R608	321-0089-00			RES.,FXD,FILM:82.5 OHM,1%,0.125W	75042	CEAT0-82R50F
R610	307-0106-00			RES.,FXD,COMP:4.7 OHM,5%,0.25W	01121	CB47G5
R612	321-0193-00	B010100	B139999	RES.,FXD,FILM:1K OHM,1%,0.125W	75042	CEAT0-1001F
R612	321-0612-00	B140000		RES.,FXD,FILM:500 OHM,1%,0.125W	91637	MFF1816D500F
R613	321-0222-00	B010100	B139999	RES.,FXD,FILM:2K OHM,1%,0.125W	75042	CEAT0-2001F
R613	321-0193-00	B140000		RES.,FXD,FILM:1K OHM,1%,0.125W	75042	CEAT0-1001F
R615	315-0240-00			RES.,FXD,COMP:24 OHM,5%,0.25W	01121	CB2405
R617	321-0020-00			RES.,FXD,FILM:15.8 OHM,1%,0.125W	75042	CEAT0-15R80F
R619	315-0101-00			RES.,FXD,COMP:100 OHM,5%,0.25W	01121	CB1015
R622	321-0208-00			RES.,FXD,FILM:1.43K OHM,1%,0.125W	75042	CEAT0-1431F
R623	307-0106-00			RES.,FXD,COMP:4.7 OHM,5%,0.25W	01121	CB47G5
R625	321-0224-00			RES.,FXD,FILM:2.1K OHM,1%,0.125W	75042	CEAT0-2101F
R627	315-0101-00			RES.,FXD,COMP:100 OHM,5%,0.25W	01121	CB1015
R630	315-0101-00			RES.,FXD,COMP:100 OHM,5%,0.25W	01121	CB1015
R633	315-0222-00			RES.,FXD,COMP:2.2K OHM,5%,0.25W	01121	CB2225
R636	315-0241-00			RES.,FXD,COMP:240 OHM,5%,0.25W	01121	CB2415
R637	315-0152-00			RES.,FXD,COMP:1.5K OHM,5%,0.25W	01121	CB1525
R639	315-0101-00			RES.,FXD,COMP:100 OHM,5%,0.25W	01121	CB1015
R641	315-0272-00			RES.,FXD,COMP:2.7K OHM,5%,0.25W	01121	CB2725
R643	315-0220-00			RES.,FXD,COMP:22 OHM,5%,0.25W	01121	CB2205
R645	321-0260-00			RES.,FXD,FILM:4.99K OHM,1%,0.125W	75042	CEAT0-4991F
R647	321-0190-00			RES.,FXD,FILM:931 OHM,1%,0.125W	75042	CEAT0-9310F
R651	315-0201-00			RES.,FXD,COMP:200 OHM,5%,0.25W	01121	CB2015
R652	315-0123-00			RES.,FXD,COMP:12K OHM,5%,0.25W	01121	CB1235
R654	315-0201-00			RES.,FXD,COMP:200 OHM,5%,0.25W	01121	CB2015
R655	315-0123-00			RES.,FXD,COMP:12K OHM,5%,0.25W	01121	CB1235
R657	315-0201-00			RES.,FXD,COMP:200 OHM,5%,0.25W	01121	CB2015
R658	315-0123-00			RES.,FXD,COMP:12K OHM,5%,0.25W	01121	CB1235
R660	315-0101-00			RES.,FXD,COMP:100 OHM,5%,0.25W	01121	CB1015
R662	315-0821-00			RES.,FXD,COMP:820 OHM,5%,0.25W	01121	CB8215
R663	321-0193-00			RES.,FXD,FILM:1K OHM,1%,0.125W	75042	CEAT0-1001F
R667	315-0561-00			RES.,FXD,COMP:560 OHM,5%,0.25W	01121	CB5615
R669	307-0106-00			RES.,FXD,COMP:4.7 OHM,5%,0.25W	01121	CB47G5
R670	321-0143-00			RES.,FXD,FILM:301 OHM,1%,0.125W	75042	CEAT0-3010F

http://www.tekscopes.com

Ckt No.	Tektronix Part No.	Serial/Model No. Eff	Dscont	Name & Description	Mfr Code	Mfr Part Number
R672	321-0180-00			RES.,FXD,FILM:732 OHM,1%,0.125W	75042	CEAT0-7320F
R673	321-0226-00			RES.,FXD,FILM:2.21K OHM,1%,0.125W	75042	CEAT0-2211F
R675	321-0189-00			RES.,FXD,FILM:909 OHM,1%,0.125W	75042	CEAT0-9090F
R677	315-0390-00			RES.,FXD,COMP:39 OHM,5%,0.25W	01121	CB3905
R679	307-0106-00			RES.,FXD,COMP:4.7 OHM,5%,0.25W	01121	CB47G5
R805	307-0113-00	B010100	B029999X	RES.,FXD,COMP:5.1 OHM,5%,0.25W	01121	CB51G5
R806	302-0473-00			RES.,FXD,COMP:47K OHM,10%,0.50W	01121	EB4731
R808	302-0223-00			RES.,FXD,COMP:22K OHM,10%,0.50W	01121	EB2231
R809	302-0223-00			RES.,FXD,COMP:22K OHM,10%,0.50W	01121	EB2231
R811	302-0472-00			RES.,FXD,COMP:4.7K OHM,10%,050W	01121	EB4721
R814	302-0472-00			RES.,FXD,COMP:4.7K OHM,10%,050W	01121	EB4721
R821	302-0472-00			RES.,FXD,COMP:4.7K OHM,10%,050W	01121	EB4721
R822	315-0102-00			RES.,FXD,COMP:1K OHM,5%,0.25W	01121	CB1025
R823	315-0151-00			RES.,FXD,COMP:150 OHM,5%,0.25W	01121	CB1515
R824	315-0470-00			RES.,FXD,COMP:47 OHM,5%,0.25W	01121	CB4705
R826	315-0302-00			RES.,FXD,COMP:3K OHM,5%,0.25W	01121	CB3025
R827	315-0472-00			RES.,FXD,COMP:4.7K OHM,5%,0.25W	01121	CB4725
R830	315-0911-00			RES.,FXD,COMP:910 OHM,5%,0.25W	01121	CB9115
R831	315-0392-00			RES.,FXD,COMP:3.9K OHM,5%,0.25W	01121	CB3925
R833	315-0683-00			RES.,FXD,COMP:68K OHM,5%,0.25W	01121	CB6835
R837	307-0054-00			RES.,FXD,COMP:3.6 OHM,5%,0.50W	01121	EB36GB
R838	307-0054-00			RES.,FXD,COMP:3.6 OHM,5%,0.50W	01121	EB36GB
R853	315-0473-00			RES.,FXD,COMP:47K OHM,5%,0.25W	01121	CB4735
R855	323-0309-00			RES.,FXD,FILM:16.2K OHM,1%,0.50W	75042	CECT0-1622F
R856	323-0289-00			RES.,FXD,FILM:10K OHM,1%,0.50W	75042	CECT0-1002F
R858	321-0924-07			RES.,FXD,FILM:40K OHM,0.1%,0.125W	75042	CEAT9-4002B
R859	321-0924-07			RES.,FXD,FILM:40K OHM,0.1%,0.125W	75042	CEAT9-4002B
R860	315-0684-00			RES.,FXD,COMP:680K OHM,5%,0.25W	01121	CB6845
R862	315-0204-00			RES.,FXD,COMP:200K OHM,5%,0.25W	01121	CB2045
R864	315-0203-00			RES.,FXD,COMP:20K OHM,5%,0.25W	01121	CB2035
R866	315-0332-00			RES.,FXD,COMP:3.3K OHM,5%,0.25W	01121	CB3325
R867	315-0824-00			RES.,FXD,COMP:820K OHM,5%,0.25W	01121	CB8245
R870	315-0122-00			RES.,FXD,COMP:1.2K OHM,5%,0.25W	01121	CB1225
R872	315-0151-00			RES.,FXD,COMP:150 OHM,5%,0.25W	01121	CB1515
R875	308-0677-00			RES.,FXD,WW:1 OHM,5%,3W	75042	BWH1R000J
R876	315-0154-00			RES.,FXD,COMP:150K OHM,5%,0.25W	01121	CB1545
R877	315-0511-00			RES.,FXD,COMP:510 OHM,5%,0.25W	01121	CB5115
R878	315-0104-00			RES.,FXD,COMP:100K OHM,5%,0.25W	01121	CB1045
R879	315-0124-00			RES.,FXD,COMP:120K OHM,5%,0.25W	01121	CB1245
R880	323-0272-00			RES.,FXD,FILM:6.65K OHM,1%,0.50W	75042	CECT0-6651F
R881	311-1223-00			RES.,VAR,NONWIR:250 OHM,10%,0.50W	80294	3389F-P32-251
R882	323-0206-00			RES.,FXD,FILM:1.37K OHM,1%,0.50W	75042	CECT0-1371F
R883	321-0223-00			RES.,FXD,FILM:2.05K OHM,1%,0.125W	75042	CEAT0-2051F
R884	323-0306-00			RES.,FXD,FILM:15K OHM,1%,0.50W	75042	CECT0-1502F
R886	315-0224-00			RES.,FXD,COMP:220K OHM,5%,0.25W	01121	CB2245
R889	315-0911-00			RES.,FXD,COMP:910 OHM,5%,0.25W	01121	CB9115
R890	323-0264-00			RES.,FXD,FILM:5.49K OHM,1%,0.50W	75042	CECT0-5491F
R891	315-0473-00			RES.,FXD,COMP:47K OHM,5%,0.25W	01121	CB4735
R892	315-0682-00			RES.,FXD,COMP:6.8K OHM,5%,0.25W	01121	CB6825
R894	315-0245-00			RES.,FXD,COMP:2.4M OHM,5%,0.25W	01121	CB2455
R896	301-0363-00			RES.,FXD,COMP:36K OHM,5%,0.50W	01121	EB3635
R898	315-0182-00			RES.,FXD,COMP:1.8K OHM,5%,0.25W	01121	CB1825
R901	315-0151-00			RES.,FXD,COMP:150 OHM,5%,0.25W	01121	CB1515

http://manuals.sqhl.com

Ckt No.	Tektronix Part No.	Serial/Model No. Eff	Dscont	Name & Description	Mfr Code	Mfr Part Number
R903	308-0677-00			RES.,FXD,WW:1 OHM,5%,3W	75042	BWH1R000J
R904	308-0679-00			RES.,FXD,WW:0.51 OHM,5%,2W	75042	BWHR5100J
R906	315-0304-00			RES.,FXD,COMP:300K OHM,5%,0.25W	01121	CB3045
R907	315-0753-00			RES.,FXD,COMP:75K OHM,5%,0.25W	01121	CB7535
R908	315-0431-00			RES.,FXD,COMP:430 OHM,5%,0.25W	01121	CB4315
R910	315-0681-00			RES.,FXD,COMP:680 OHM,5%,0.25W	01121	CB6815
R911	315-0563-00			RES.,FXD,COMP:56K OHM,5%,0.25W	01121	CB5635
R912	315-0182-00			RES.,FXD,COMP:1.8K OHM,5%,0.25W	01121	CB1825
R915	321-1296-07			RES.,FXD,FILM:12K OHM,0.1%,0.125W	75042	CEAT9-1202B
R916	321-0924-07			RES.,FXD,FILM:40K OHM,0.1%,0.125W	75042	CEAT9-4002B
R918	301-0683-00			RES.,FXD,COMP:68K OHM,5%,0.50W	01121	EB6835
R921	315-0912-00			RES.,FXD,COMP:9.1K OHM,5%,0.25W	01121	CB9125
R922	315-0623-00			RES.,FXD,COMP:62K OHM,5%,0.25W	01121	CB6235
R923	315-0512-00			RES.,FXD,COMP:5.1K OHM,5%,0.25W	01121	CB5125
R924	315-0623-00			RES.,FXD,COMP:62K OHM,5%,0.25W	01121	CB6235
R927	315-0472-00			RES.,FXD,COMP:4.7K OHM,5%,0.25W	01121	CB4725
R932	315-0182-00			RES.,FXD,COMP:1.8K OHM,5%,0.25W	01121	CB1825
R935	308-0678-00			RES.,FXD,WW:0.1 OHM,5%,2W	75042	BWHR1000J
R936	301-0273-00			RES.,FXD,COMP:27K OHM,5%,0.50W	01121	EB2735
R937	321-0151-00			RES.,FXD,FILM:365 OHM,1%,0.125W	75042	CEAT0-3650F
R938	321-0330-00			RES.,FXD,FILM:26.7K OHM,1%,0.125W	75042	CEAT0-2672F
R939	321-0409-00			RES.,FXD,FILM:178K OHM,1%,0.125W	75042	CEAT0-1783F
R940	315-0822-00			RES.,FXD,COMP:8.2K OHM,5%,0.25W	01121	CB8225
R942	315-0154-00			RES.,FXD,COMP:150K OHM,5%,0.25W	01121	CB1545
R945	321-0332-07			RES.,FXD,FILM:28K OHM,0.1%,0.125W	75042	CEAT9-2802B
R946	321-1296-07			RES.,FXD,FILM:12K OHM,0.1%,0.125W	75042	CEAT9-1202B
R948	315-0914-00			RES.,FXD,COMP:910K OHM,5%,0.25W	01121	CB9145
R950	315-0681-00			RES.,FXD,COMP:680 OHM,5%,0.25W	01121	CB6815
R952	301-0303-00			RES.,FXD,COMP:30K OHM,5%,0.50W	01121	EB3035
R954	315-0472-00			RES.,FXD,COMP:4.7K OHM,5%,0.25W	01121	CB4725
R956	307-0103-00			RES.,FXD,COMP:2.7 OHM,5%,0.25W	01121	CB27G5
R957	315-0151-00			RES.,FXD,COMP:150 OHM,5%,0.25W	01121	CB1515
R958	308-0678-00			RES.,FXD,WW:0.1 OHM,5%,2W	75042	BWHR1000J
R959	308-0680-00			RES.,FXD,WW:0.045 OHM,10%,3W	91637	LVR2-DR0450K
R961	315-0221-00			RES.,FXD,COMP:220 OHM,5%,0.25W	01121	CB2215
R963	315-0682-00			RES.,FXD,COMP:6.8K OHM,5%,0.25W	01121	CB6825
R966	315-0123-00			RES.,FXD,COMP:12K OHM,5%,0.25W	01121	CB1235
R967	315-0364-00			RES.,FXD,COMP:360K OHM,5%,0.25W	01121	CB3645
R970	321-0926-07			RES.,FXD,FILM:4K OHM,0.1%,0.125W	75042	CEAT9-4001B
R971	321-0924-07			RES.,FXD,FILM:40K OHM,0.1%,0.125W	75042	CEAT9-4002B
R973	315-0683-00			RES.,FXD,COMP:68K OHM,5%,0.25W	01121	CB6835
R974	315-0303-00			RES.,FXD,COMP:30K OHM,5%,0.25W	01121	CB3035
R975	315-0362-00			RES.,FXD,COMP:3.6K OHM,5%,0.25W	01121	CB3625
R977	315-0184-00			RES.,FXD,COMP:180K OHM,5%,0.25W	01121	CB1845
R979	315-0822-00			RES.,FXD,COMP:8.2K OHM,5%,0.25W	01121	CB8225
R980	315-0164-00			RES.,FXD,COMP:160K OHM,5%,0.25W	01121	CB1645
R983	315-0472-00			RES.,FXD,COMP:4.7K OHM,5%,0.25W	01121	CB4725
R985	304-0470-00			RES.,FXD,COMP:47 OHM,10%,1W	01121	GB4701
R986	315-0122-00			RES.,FXD,COMP:1.2K OHM,5%,0.25W	01121	CB1225
R989	308-0678-00			RES.,FXD,WW:0.1 OHM,5%,2W	75042	BWHR1000J
R991	315-0753-00			RES.,FXD,COMP:75K OHM,5%,0.25W	01121	CB7535
R993	315-0241-00			RES.,FXD,COMP:240 OHM,5%,0.25W	01121	CB2415
R994	315-0124-00			RES.,FXD,COMP:120K OHM,5%,0.25W	01121	CB1245

http://manuals.solar-sqm.com

Ckt No.	Tektronix Part No.	Serial/Model No. Eff	Dscont	Name & Description	Mfr Code	Mfr Part Number
R995	315-0562-00			RES.,FXD,COMP:5.6K OHM,5%,0.25W	01121	CB5625
R1018	315-0102-00			RES.,FXD,COMP:1K OHM,5%,0.25W	01121	CB1025
R1019	315-0102-00			RES.,FXD,COMP:1K OHM,5%,0.25W	01121	CB1025
R1020	315-0150-00	B010100	B060000	RES.,FXD,COMP:15 OHM,5%,0.25W	01121	CB1505
R1020	307-0107-00	B070000		RES.,FXD,COMP:5.6 OHM,5%,0.25W	01121	CB56G5
R1022	315-0303-00			RES.,FXD,COMP:30K OHM,5%,0.25W	01121	CB3035
R1095[1]	311-1055-00			RES.,VAR,NONWIR:1K OHM 20%,0.50W	12697	CM-40034
R1101	315-0470-00			RES.,FXD,COMP:47 OHM,5%,0.25W	01121	CB4705
R1103	315-0471-00			RES.,FXD,COMP:470 OHM,5%,0.25W	01121	CB4715
R1106	315-0103-00			RES.,FXD,COMP:10K OHM,5%,0.25W	01121	CB1035
R1107	315-0123-00			RES.,FXD,COMP:12K OHM,5%,0.25W	01121	CB1235
R1115	317-0392-00			RES.,FXD,COMP:3.9K OHM,5%,0.125W	01121	CB3925
R1116	323-0312-00			RES.,FXD,FILM:17.4K OHM,1%,0.50W	75042	CECT0-1742F
R1118	315-0121-00			RES.,FXD,COMP:120 OHM,5%,0.25W	01121	CB1215
R1120	315-0203-00			RES.,FXD,COMP:20K OHM,5%,0.25W	01121	CB2035
R1121	315-0562-00			RES.,FXD,COMP:5.6K OHM,5%,0.25W	01121	CB5625
R1123	315-0392-00			RES.,FXD,COMP:3.9K OHM,5%,0.25W	01121	CB3925
R1124	315-0100-00			RES.,FXD,COMP:10 OHM,5%,0.25W	01121	CB1005
R1125	315-0102-00			RES.,FXD,COMP:1K OHM,5%,0.25W	01121	CB1025
R1127	315-0102-00			RES.,FXD,COMP:1K OHM,5%,0.25W	01121	CB1025
R1130	321-0325-00			RES.,FXD,FILM:23.7K OHM,1%,0.125W	75042	CEAT0-2372F
R1131	315-0513-00			RES.,FXD,COMP:51K OHM,5%,0.25W	01121	CB5135
R1133	321-0311-00			RES.,FXD,FILM:16.9K OHM,1%,0.125W	75042	CEAT0-1692F
R1135	315-0470-00			RES.,FXD,COMP:47 OHM,5%,0.25W	01121	CB4705
R1138	315-0104-00			RES.,FXD,COMP:100K OHM,5%,0.25W	01121	CB1045
R1141	311-1233-00			RES.,VAR,NONWIR:50K OHM,10%,0.50W	80294	3389F-P34-503
R1142	315-0472-00			RES.,FXD,COMP:4.7K OHM,5%,0.25W	01121	CB4725
R1144	315-0623-00			RES.,FXD,COMP:62K OHM,5%,0.25W	01121	CB6235
R1147	311-1228-00			RES.,VAR,NONWIR:10K OHM,20%,0.50W	80294	3389F-P31-103
R1148	315-0472-00			RES.,FXD,COMP:4.7K OHM,5%,0.25W	01121	CB4725
R1152	315-0621-00			RES.,FXD,COMP:620 OHM,5%,0.25W	01121	CB6215
R1154	315-0183-00			RES.,FXD,COMP:18K OHM,5%,0.25W	01121	CB1835
R1157	321-0336-00			RES.,FXD,FILM:30.9 OHM,1%,0.125W	75042	CEAT0-3092F
R1158	321-0362-00			RES.,FXD,FILM:57.6K OHM,1%,0.125W	75042	CEAT0-5762F
R1159	321-0441-00			RES.,FXD,FILM:383K OHM,1%,0.125W	75042	CEAT0-3833F
R1161	315-0103-00			RES.,FXD,COMP:10K OHM,5%,0.25W	01121	CB1035
R1162	315-0244-00			RES.,FXD,COMP:240K OHM,5%,0.25W	01121	CB2445
R1164	315-0822-00			RES.,FXD,COMP:8.2K OHM,5%,0.25W	01121	CB8225
R1166	315-0121-00			RES.,FXD,COMP:120 OHM,5%,0.25W	01121	CB1215
R1168	315-0101-00			RES.,FXD,COMP:100 OHM,5%,0.25W	01121	CB1015
R1171	311-1233-00			RES.,VAR,NONWIR:50K OHM,10%,0.50W	80294	3389F-P34-503
R1173	316-0225-00			RES.,FXD,COMP:2.2M OHM,10%,0.25W	01121	CB2251
R1174	315-0475-00			RES.,FXD,COMP:4.7M OHM,5%,0.25W	01121	CB4755
R1175	307-0106-00			RES.,FXD,COMP:4.7 OHM,5%,0.25W	01121	CB47G5
R1176	315-0101-00			RES.,FXD,COMP:100 OHM,5%,0.25W	01121	CB1015
R1178	311-1233-00			RES.,VAR,NONWIR:50K OHM,10%,0.50W	80294	3389F-P34-503
R1179	321-0424-00	B010100	B079999	RES.,FXD,FILM:255K OHM,1%,0.125W	75042	CEAT0-3013F
R1179	321-0431-00	B080000	B110947	RES.,FXD,FILM:301K OHM,1%,0.125W	75042	CEAT0-3013F
R1179	321-0429-00	B110948		RES.,FXD,FILM:287K OHM,1%,0.125W		
R1180	315-0754-00	B010100	B110947	RES.,FXD,COMP:750K OHM,5%,0.25W	01121	CB7545
R1180	315-0624-00	B110948		RES.,FXD,COMP:620K OHM,5%,0.25W		
R1181	315-0244-00	B010100	B110947	RES.,FXD,COMP:240K OHM,5%,0.25W	01121	CB2445
R1181	315-0164-00	B110948		RES.,FXD,COMP:160K OHM,5%,0.25W	01121	CB1605

[1]Furnished as a unit with S1095.

http://manuals.sqhl.com

Ckt No.	Tektronix Part No.	Serial/Model No. Eff	Dscont	Name & Description	Mfr Code	Mfr Part Number
R1182	315-0103-00			RES.,FXD,COMP:10K OHM,5%,0.25W	01121	CB1035
R1183	315-0102-00			RES.,FXD,COMP:1K OHM,5%,0.25W	01121	CB1025
R1184	315-0473-00			RES.,FXD,COMP:47K OHM,5%,0.25W	01121	CB4735
R1185	315-0474-00			RES.,FXD,COMP:470K OHM,5%,0.25W	01121	CB4745
R1188	315-0102-00			RES.,FXD,COMP:1K OHM,5%,0.25W	01121	CB1025
R1189	315-0104-00			RES.,FXD,COMP:100K OHM,5%,0.25W	01121	CB1045
R1192	315-0562-00			RES.,FXD,COMP:5.6K OHM,5%,0.25W	01121	CB5625
R1204	301-0305-00			RES.,FXD,COMP:3M OHM,5%,0.50W	01121	EB3055
R1205	301-0305-00			RES.,FXD,COMP:3M OHM,5%,0.50W	01121	EB3055
R1206	301-0305-00			RES.,FXD,COMP:3M OHM,5%,0.50W	01121	EB3055
R1207	301-0305-00			RES.,FXD,COMP:3M OHM,5%,0.50W	01121	EB3055
R1208	301-0305-00			RES.,FXD,COMP:3M OHM,5%,0.50W	01121	EB3055
R1210	315-0102-00			RES.,FXD,COMP:1K OHM,5%,0.25W	01121	CB1025
R1211	315-0103-00			RES.,FXD,COMP:10K OHM,5%,0.25W	01121	CB1035
R1214	315-0103-00			RES.,FXD,COMP:10K OHM,5%,0.25W	01121	CB1035
R1216	315-0102-00			RES.,FXD,COMP:1K OHM,5%,0.25W	01121	CB1025
R1217	315-0103-00			RES.,FXD,COMP:10K OHM,5%,0.25W	01121	CB1035
R1219	315-0302-00			RES.,FXD,COMP:3K OHM,5%,0.25W	01121	CB3025
R1221	316-0825-00			RES.,FXD,COMP:8.2M OHM,10%,0.25W	01121	CB8251
R1223	315-0434-00			RES.,FXD,COMP:430K OHM,5%,0.25W	01121	CB4345
R1224	315-0101-00			RES.,FXD,COMP:100 OHM,5%,0.25W	01121	CB1015
R1226A,B R1226C,D	307-0386-03			RES.,FXD,FILM:HYBRID	80009	307-0386-03
R1230	311-1584-00			RES.,VAR,NONWIR:50K OHM,10%,0.50W	12697	382-CM40221
R1232	315-0103-00			RES.,FXD,COMP:10K OHM,5%,0.25W	01121	CB1035
R1233	315-0103-00			RES.,FXD,COMP:10K OHM,5%,0.25W	01121	CB1035
R1235	315-0754-00			RES.,FXD,COMP:750K OHM,5%,0.25W	01121	CB7545
R1236	315-0754-00			RES.,FXD,COMP:750K OHM,5%,0.25W	01121	CB7545
R1239	315-0915-00			RES.,FXD,COMP:9.1M OHM,5%,0.25W	01121	CB9155
R1240	315-0103-00			RES.,FXD,COMP:10K OHM,5%,0.25W	01121	CB1035
R1242	311-1257-00			RES.,VAR,NONWIR:5M OHM,20%,0.50W	80294	3389F-P32-505
R1243	311-1257-00			RES.,VAR,NONWIR:5M OHM,20%,0.50W	80294	3389F-P32-505
R1245	321-0486-00			RES.,FXD,FILM:1.13M OHM,+/-1%,0.125W	75042	CEAT0-1134F
R1246[1]						
R1248	311-1233-00			RES.,VAR,NONWIR:50K OHM,10%,0.50W	80294	3389F-P34-503
R1250	315-0103-00			RES.,FXD,COMP:10K OHM,5%,0.25W	01121	CB1035
R1251	315-0103-00			RES.,FXD,COMP:10K OHM,5%,0.25W	01121	CB1035
R1253	315-0754-00			RES.,FXD,COMP:750K OHM,5%,0.25W	01121	CB7545
R1254	315-0754-00			RES.,FXD,COMP:750K OHM,5%,0.25W	01121	CB7545
R1258	315-0915-00			RES.,FXD,COMP:9.1M OHM,5%,0.25W	01121	CB9155
R1259	315-0103-00			RES.,FXD,COMP:10K OHM,5%,0.25W	01121	CB1035
R1261	315-0104-00			RES.,FXD,COMP:100K OHM,5%,0.25W	01121	CB1045
R1263	315-0474-00			RES.,FXD,COMP:470K OHM,5%,0.25W	01121	CB4745
R1270	315-0362-00			RES.,FXD,COMP:3.6K OHM,5%,0.25W	01121	CB3625
R1271	315-0362-00			RES.,FXD,COMP:3.6K OHM,5%,0.25W	01121	CB3625
R1272						
R1274	311-1235-00			RES.,VAR,NONWIR:100K OHM,20%,0.50W	80294	3389F-P31-104
R1276	311-1235-00			RES.,VAR,NONWIR:100K OHM,20%,0.50W	80294	3389F-P31-104
R1282	315-0133-00			RES.,FXD,COMP:13K OHM,5%,0.25W	01121	CB1335
R1283	315-0472-00			RES.,FXD,COMP:4.7K OHM,5%,0.25W	01121	CB4725
R1284	311-1227-00			RES.,VAR,NONWIR:5K OHM,20%,0.50W	80294	3389F-P31-502
R1286	311-1583-00			RES.,VAR,NONWIR:5K OHM,10%,0.50W	01121	F-8195
R1288	315-0133-00			RES.,FXD,COMP:13K OHM,5%,0.25W	01121	CB1335

[1]Furnished with CRT Socket Cable.

http://manuals.sqrill.com

Ckt No.	Tektronix Part No.	Serial/Model No. Eff	Dscont	Name & Description	Mfr Code	Mfr Part Number
R1289[1]	315-0472-00			RES.,FXD,COMP:4.7K OHM,5%,0.25W	01121	CB4725
R1291						
R1292	311-1235-00			RES.,VAR,NONWIR:100K OHM,20%,0.50W	80294	3389F-P31-104
R1410	315-0103-00			RES.,FXD,COMP:10K OHM,5%,0.25W	01121	CB1035
R1411	315-0274-00			RES.,FXD,COMP:270K OHM,5%,0.25W	01121	CB2745
R1412	315-0472-00			RES.,FXD,COMP:4.7K OHM,5%,0.25W	01121	CB4725
R1414	315-0472-00			RES.,FXD,COMP:4.7K OHM,5%,0.25W	01121	CB4725
R1415	315-0103-00			RES.,FXD,COMP:10K OHM,5%,0.25W	01121	CB1035
R1416	315-0332-00			RES.,FXD,COMP:3.3K OHM,5%,0.25W	01121	CB3325
R1418	315-0471-00			RES.,FXD,COMP:470 OHM,5%,0.25W	01121	CB4715
R1419	315-0471-00			RES.,FXD,COMP:470 OHM,5%,0.25W	01121	CB4715
R1421	315-0103-00			RES.,FXD,COMP:10K OHM,5%,0.25W	01121	CB1035
R1422	315-0103-00			RES.,FXD,COMP:10K OHM,5%,0.25W	01121	CB1035
R1425	315-0103-00			RES.,FXD,COMP:10K OHM,5%,0.25W	01121	CB1035
R1427	315-0474-00			RES.,FXD,COMP:470K OHM,5%,0.25W	01121	CB4745
R1430[2]	311-1580-00			RES.,VAR,NONWIR:5K OHM,10%	01121	11M752
R1440	315-0223-00			RES.,FXD,COMP:22K OHM,5%,0.25W	01121	CB2235
R1441	315-0362-00			RES.,FXD,COMP:3.6K OHM,5%,0.25W	01121	CB3625
R1443	315-0433-00			RES.,FXD,COMP:43K OHM,5%,0.25W	01121	CB4335
R1445	315-0433-00			RES.,FXD,COMP:43K OHM,5%,0.25W	01121	CB4335
R1447	315-0183-00			RES.,FXD,COMP:18K OHM,5%,0.25W	01121	CB1835
R1448	315-0513-00			RES.,FXD,COMP:51K OHM,5%,0.25W	01121	CB5135
R1452	323-0258-00			RES.,FXD,FILM:4.75K OHM,1%,0.50W	91637	MFF1226G47500F
R1455	315-0202-00			RES.,FXD,COMP:2K OHM,5%,0.25W	01121	CB2025
R1456	315-0202-00			RES.,FXD,COMP:2K OHM,5%,0.25W	01121	CB2025
R1457	315-0752-00			RES.,FXD,COMP:7.5K OHM,5%,0.25W	01121	CB7525
R1459	311-1227-00			RES.,VAR,NONWIR:5K OHM,20%,0.50W	80294	3389F-P31-502
R1461	321-0318-00			RES.,FXD,FILM:20K OHM,1%,0.125W	75042	CEAT0-2002F
R1463	321-0812-07			RES.,FXD,FILM:455 OHM,0.1%,0.125W	75042	CEAT9-4550B
R1464	321-1068-07			RES.,FXD,FILM:50.5 OHM,0.1%,0.125W	75042	CEAT9-50R50B
R1466	321-0816-07			RES.,FXD,FILM:5K OHM,0.1%,0.125W	75042	CEAT9-5001B
R1467	321-1068-07			RES.,FXD,FILM:50.5 OHM,0.1%,0.125W	75042	CEAT9-50R50B
R1468	308-0679-00			RES.,FXD,WW:0.51 OHM,5%,2W	75042	BWHR5100J
R1472A,B	311-1581-00			RES.,VAR,NONWIR:2 X 10K OHM,10%	01121	12M106
R1474	315-0103-00			RES.,FXD,COMP:10K OHM,5%,0.25W	01121	CB1035
R1476	315-0472-00			RES.,FXD,COMP:4.7K OHM,5%,0.25W	01121	CB4725
R1478	315-0562-00			RES.,FXD,COMP:5.6K OHM,5%,0.25W	01121	CB5625
R1483	315-0301-00			RES.,FXD,COMP:300 OHM,5%,0.25W	01121	CB3015
R1486	321-0251-00			RES.,FXD,FILM:4.02K OHM,1%,0.125W	75042	CEAT0-4021F
R1488A,B[3]	311-1582-00			RES.,VAR,NONWIR:2 X 10K OHM,10%	01121	12M448
R1491	321-0210-00			RES.,FXD,FILM:1.5K OHM,1%,0.125W	75042	CEAT0-1501F
R1493	315-0103-00			RES.,FXD,COMP:10K OHM,5%,0.25W	01121	CB1035
R1501	315-0152-00			RES.,FXD,COMP:1.5K OHM,5%,0.25W	01121	CB1525
R1502	315-0154-00			RES.,FXD,COMP:150K OHM,5%,0.25W	01121	CB1545
R1510	315-0101-00			RES.,FXD,COMP:100 OHM,5%,0.25W	01121	CB1015
R1511	315-0273-00			RES.,FXD,COMP:27K OHM,5%,0.25W	01121	CB2735
R1513	315-0124-00			RES.,FXD,COMP:120K OHM,5%,0.25W	01121	CB1245
R1515	315-0304-00	B010100	B149999	RES.,FXD,COMP:300K OHM,5%,0.25W	01121	CB3045
R1515	315-0123-00	B150000		RES.,FXD,COMP:12K OHM,5%,0.25W	01121	CB1235
R1517	315-0155-00			RES.,FXD,COMP:1.5M OHM,5%,0.25W	01121	CB1555
R1519	315-0300-00			RES.,FXD,COMP:30 OHM,5%,0.25W	01121	CB3005
R1521	321-0263-00			RES.,FXD,FILM:5.36K OHM,1%,0.125W	75042	CEAT0-5361F
R1522	321-0210-00			RES.,FXD,FILM:1.5K OHM,1%,0.125W	75042	CEAT0-1501F
R1523	315-0271-00			RES.,FXD,COMP:270 OHM,5%,0.25W	01121	CB2715

[1]Furnished with CRT Socket Cable.
[2]Furnished as a unit with S1430 and S1282.
[3]Furnished as a unit with S1488B and S1488C.

http://manuals.sqhl.com

Ckt No.	Tektronix Part No.	Serial/Model No. Eff	Dscont	Name & Description	Mfr Code	Mfr Part Number
R1531	315-0564-00			RES.,FXD,COMP:560K OHM,5%,0.25W	01121	CB5645
R1532	315-0223-00			RES.,FXD,COMP:22K OHM,5%,0.25W	01121	CB2235
R1534	315-0473-00			RES.,FXD,COMP:47K OHM,5%,0.25W	01121	CB4735
R1536	315-0333-00			RES.,FXD,COMP:33K OHM,5%,0.25W	01121	CB3335
R1537	315-0104-00			RES.,FXD,COMP:100K OHM,5%,0.25W	01121	CB1045
R1539	315-0203-00			RES.,FXD,COMP:20K OHM,5%,0.25W	01121	CB2035
R1541	315-0823-00			RES.,FXD,COMP:82K OHM,5%,0.25W	01121	CB8235
R1542	315-0103-00			RES.,FXD,COMP:10K OHM,5%,0.25W	01121	CB1035
R1544	321-0280-00			RES.,FXD,FILM:8.06K OHM,1%,0.125W	75042	CEAT0-8061F
R1548	321-0280-00			RES.,FXD,FILM:8.06K OHM,1%,0.125W	75042	CEAT0-8061F
R1549	315-0361-00			RES.,FXD,COMP:360 OHM,5%,0.25W	01121	CB3615
R1551	315-0103-00			RES.,FXD,COMP:10K OHM,5%,0.25W	01121	CB1035
R1553	315-0682-00			RES.,FXD,COMP:6.8K OHM,5%,0.25W	01121	CB6825
R1556	315-0361-00			RES.,FXD,COMP:360 OHM,5%,0.25W	01121	CB3615
R1561	315-0103-00			RES.,FXD,COMP:10K OHM,5%,0.25W	01121	CB1035
R1562	315-0103-00			RES.,FXD,COMP:10K OHM,5%,0.25W	01121	CB1035
R1564	315-0472-00			RES.,FXD,COMP:4.7K OHM,5%,0.25W	01121	CB4725
R1565	315-0472-00			RES.,FXD,COMP:4.7K OHM,5%,0.25W	01121	CB4725
R1567	315-0103-00			RES.,FXD,COMP:10K OHM,5%,0.25W	01121	CB1035
R1571	315-0203-00			RES.,FXD,COMP:20K OHM,5%,0.25W	01121	CB2035
R1572	315-0203-00			RES.,FXD,COMP:20K OHM,5%,0.25W	01121	CB2035
R1573	315-0203-00			RES.,FXD,COMP:20K OHM,5%,0.25W	01121	CB2035
R1574	315-0472-00			RES.,FXD,COMP:4.7K OHM,5%,0.25W	01121	CB4725
R1576	315-0332-00			RES.,FXD,COMP:3.3K OHM,5%,0.25W	01121	CB3325
R1579	315-0471-00			RES.,FXD,COMP:470 OHM,5%,0.25W	01121	CB4715
R1580	315-0152-00			RES.,FXD,COMP:1.5K OHM,5%,0.25W	01121	CB1525
R1582	315-0202-00			RES.,FXD,COMP:2K OHM,5%,0.25W	01121	CB2025
R1584	315-0203-00			RES.,FXD,COMP:20K OHM,5%,0.25W	01121	CB2035
R1589	315-0102-00			RES.,FXD,COMP:1K OHM,5%,0.25W	01121	CB1025
R1591	315-0752-00			RES.,FXD,COMP:7.5K OHM,5%,0.25W	01121	CB7525
R1592	315-0752-00			RES.,FXD,COMP:7.5K OHM,5%,0.25W	01121	CB7525
R1593	315-0752-00			RES.,FXD,COMP:7.5K OHM,5%,0.25W	01121	CB7525
R1595	315-0103-00			RES.,FXD,COMP:10K OHM,5%,0.25W	01121	CB1035
R1597	315-0241-00			RES.,FXD,COMP:240 OHM,5%,0.25W	01121	CB2415
R1599	315-0472-00	B010100	B149999	RES.,FXD,COMP:4.7K OHM,5%,0.25W	01121	CB4725
R1599	315-0822-00	B150000		RES.,FXD,COMP:8.2K OHM,5%,0.25W	75042	CEAT0-6192F
R1601	321-0365-00			RES.,FXD,FILM:61.9K OHM,1%,0.125W	01121	CB7515
R1603	315-0751-00			RES.,FXD,COMP:750 OHM,5%,0.25W		
R1606	315-0471-00			RES.,FXD,COMP:470 OHM,5%,0.25W	01121	CB4715
R1608	321-0330-00			RES.,FXD,FILM:26.7K OHM,1%,0.125W	75042	CEAT0-2672F
R1611	321-0280-00			RES.,FXD,FILM:8.06K OHM,1%,0.125W	75042	CEAT0-8061F
R1614	321-0273-00	B010100	B149999	RES.,FXD,FILM:6.81K OHM,1%,0.125W	75042	CEAT0-6811F
R1614	321-0268-00	B150000		RES.,FXD,FILM:6.04K OHM,1%,0.125W	75042	CEAT0-6041F
R1617	321-0248-00			RES.,FXD,FILM:3.74K OHM,1%,0.125W	75042	CEAT0-3741F
R1620	315-0683-00			RES.,FXD,COMP:68K OHM,5%,0.25W	01121	CB6835
R1621	315-0183-00			RES.,FXD,COMP:18K OHM,5%,0.25W	01121	CB1835
R1622	315-0471-00			RES.,FXD,COMP:470 OHM,5%,0.25W	01121	CB4715
					01121	CB2215
R1626	315-0472-00			RES.,FXD,COMP:4.7K OHM,5%,0.25W	01121	CB4725
R1627	315-0303-00			RES.,FXD,COMP:30K OHM,5%,0.25W	01121	CB3035
R1629	315-0242-00			RES.,FXD,COMP:2.4K OHM,5%,0.25W	01121	CB2425
R1631	315-0151-00			RES.,FXD,COMP:150 OHM,5%,0.25W	01121	CB1515
R1633	315-0394-00			RES.,FXD,COMP:390K OHM,5%,0.25W	01121	CB3945
R1635	315-0202-00			RES.,FXD,COMP:2K OHM,5%,0.25W	01121	CB2025
R1637	321-0425-00			RES.,FXD,FILM:261K OHM,1%,0.125W	75042	CEAT0-2613F
R1639	321-0452-00			RES.,FXD,FILM:499K OHM,1%,0.125W	75042	CEAT0-4993F
R1641	315-0203-00			RES.,FXD,COMP:20K OHM,5%,0.25W	01121	CB2035

http://manuals.tektronix.com

Ckt No.	Tektronix Part No.	Serial/Model No. Eff	Dscont	Name & Description	Mfr Code	Mfr Part Number
R1642	315-0203-00			RES.,FXD,COMP:20K OHM,5%,0.25W	01121	CB2035
R1644	321-0277-00			RES.,FXD,FILM:7.5K OHM,1%,0.125W	75042	CEAT0-7501F
R1646	311-1235-00			RES.,VAR,NONWIR:100K OHM,20%,0.50W	80294	3389F-P31-104
R1647	321-0402-00			RES.,FXD,FILM:150K OHM,1%,0.125W	75042	CEAT0-1503F
R1648	315-0104-00			RES.,FXD,COMP:100K OHM,5%,0.25W	01121	CB1045
R1649	315-0203-00			RES.,FXD,COMP:20K OHM,5%,0.25W	01121	CB2035
R1650	315-0203-00			RES.,FXD,COMP:20K OHM,5%,0.25W	01121	CB2035
R1651	315-0154-00	XB150000		RES.,FXD,COMP:150K OHM,5%,0.25W	01121	CB1545
R1653	321-0385-00			RES.,FXD,FILM:100K OHM,1%,0.125W	75042	CEAT0-1003F
R1654	321-0414-00			RES.,FXD,FILM:200K OHM,1%,0.125W	75042	CEAT0-2003F
R1656	321-0375-00			RES.,FXD,FILM:78.7K OHM,1%,0.125W	75042	CEAT0-7872F
R1658	311-1231-00			RES.,VAR,NONWIR:25K OHM,20%,0.50W	80294	3389F-P31-253
R1660	321-0320-00			RES.,FXD,FILM:21K OHM,1%,0.125W	75042	CEAT0-2102F
R1661	315-0433-00			RES.,FXD,COMP:43K OHM,5%,0.25W	01121	CB4335
R1662	315-0392-00			RES.,FXD,COMP:3.9K OHM,5%,0.25W	01121	CB3925
R1663	315-0472-00			RES.,FXD,COMP:4.7K OHM,5%,0.25W	01121	CB4725
R1665	315-0222-00			RES.,FXD,COMP:2.2K OHM,5%,0.25W	01121	CB2225
R1666	315-0332-00			RES.,FXD,COMP:3.3K OHM,5%,0.25W	01121	CB3325
R1668	315-0472-00			RES.,FXD,COMP:4.7K OHM,5%,0.25W	01121	CB4725
R1671	315-0103-00			RES.,FXD,COMP:10K OHM,5%,0.25W	01121	CB1035
R1672	315-0683-00			RES.,FXD,COMP:68K OHM,5%,0.25W	01121	CB6835
R1675	321-0356-00			RES.,FXD,FILM:49.9K OHM,1%,0.125W	75042	CEAT0-4992F
R1677	311-1232-00			RES.,VAR,NONWIR:50K OHM,20%,0.50W	80294	3389F-P31-503
R1678	321-0364-00			RES.,FXD,FILM:60.4K OHM,1%,0.125W	75042	CEAT0-6042F
R1679	321-0402-00			RES.,FXD,FILM:150K OHM,1%,0.125W	75042	CEAT0-1503F
R1680	321-0248-00			RES.,FXD,FILM:3.74K OHM,1%,0.125W	75042	CEAT0-3741F
R1681	315-0333-00			RES.,FXD,COMP:33K OHM,5%,0.25W	01121	CB3335
R1682	315-0103-00			RES.,FXD,COMP:10K OHM,5%,0.25W	01121	CB1035
R1683	315-0224-00			RES.,FXD,COMP:220K OHM,5%,0.25W	01121	CB2245
R1685	321-0414-00			RES.,FXD,FILM:200K OHM,1%,0.125W	75042	CEAT0-2003F
R1687	321-0349-00			RES.,FXD,FILM:42.2K OHM,1%,0.125W	75042	CEAT0-4222F
R1689	311-1231-00			RES.,VAR,NONWIR:25K OHM,20%,0.50W	80294	3389F-P31-253
R1690	321-0378-00			RES.,FXD,FILM:84.5K OHM,1%,0.125W	75042	CEAT0-8452F
R1693	315-0302-00			RES.,FXD,COMP:3K OHM,5%,0.25W	01121	CB3025
R1694	315-0204-00			RES.,FXD,COMP:200K OHM,5%,0.25W	01121	CB2045
R1695	315-0154-00			RES.,FXD,COMP:150K OHM,5%,0.25W	01121	CB1545
R1698	315-0202-00			RES.,FXD,COMP:2K OHM,5%,0.25W	01121	CB2025
R1699	315-0202-00			RES.,FXD,COMP:2K OHM,5%,0.25W	01121	CB2025
R1701	315-0153-00			RES.,FXD,COMP:15K OHM,5%,0.25W	01121	CB1535
R1704	315-0391-00			RES.,FXD,COMP:390 OHM,5%,0.25W	01121	CB3915
R1705	315-0163-00			RES.,FXD,COMP:16K OHM,5%,0.25W	01121	CB1635
R1707	315-0221-00			RES.,FXD,COMP:220 OHM,5%,0.25W	01121	CB2215
R1709	315-0154-00			RES.,FXD,COMP:150K OHM,5%,0.25W	01121	CB1545
R1711	315-0102-00			RES.,FXD,COMP:1K OHM,5%,0.25W	01121	CB1025
R1713	321-0414-00			RES.,FXD,FILM:200K OHM,1%,0.125W	75042	CEAT0-2003F
R1716	315-0332-00			RES.,FXD,COMP:3.3K OHM,5%,0.25W	01121	CB3325
R1717	315-0332-00			RES.,FXD,COMP:3.3K OHM,5%,0.25W	01121	CB3325
R1719	315-0154-00			RES.,FXD,COMP:150K OHM,5%,0.25W	01121	CB1545
R1721	315-0683-00			RES.,FXD,COMP:68K OHM,5%,0.25W	01121	CB6835
R1723	301-0753-00			RES.,FXD,COMP:75K OHM,5%,0.50W	01121	EB7535
R1725	315-0472-00			RES.,FXD,COMP:4.7K OHM,5%,0.25W	01121	CB4725
R1726	315-0433-00			RES.,FXD,COMP:43K OHM,5%,0.25W	01121	CB4335
R1730	315-0335-00			RES.,FXD,COMP:3.3M OHM,5%,0.25W	01121	CB3355
R1731	315-0335-00			RES.,FXD,COMP:3.3M OHM,5%,0.25W	01121	CB3355

http://manuals.sqhill.com

Ckt No.	Tektronix Part No.	Serial/Model No. Eff	Dscont	Name & Description	Mfr Code	Mfr Part Number
R1733	301-0753-00			RES.,FXD,COMP:75K OHM,5%,0.50W	01121	EB7535
R1737	315-0334-00			RES.,FXD,COMP:330K OHM,5%,0.25W	01121	CB3345
R1739	315-0125-00			RES.,FXD,COMP:1.2M OHM,5%,0.25W	01121	CB1255
R1741	315-0155-00			RES.,FXD,COMP:1.5M OHM,5%,0.25W	01121	CB1555
R1742	301-0305-00			RES.,FXD,COMP:3M OHM,5%,0.50W	01121	EB3055
R1750	311-1584-00	B010100	B149999	RES.,VAR,NONWIR:50K OHM,10%,0.50W	12697	382-CM40221
R1750	311-1271-00	B150000		RES.,VAR,NONWIR:50K OHM,10%,0.50W	73138	62PT-354-0
R1752	321-0354-00			RES.,FXD,FILM:47.5K OHM,1%,0.125W	75042	CEAT0-4752F
R1754	311-1232-00			RES.,VAR,NONWIR:50K OHM,20%,0.50W	80294	3389F-P31-503
R1756	321-0356-00			RES.,FXD,FILM:49.9K OHM,1%,0.125W	75042	CEAT0-4992F
R1758	321-0289-00			RES.,FXD,FILM:10K OHM,1%,0.125W	75042	CEAT0-1002F
R1759	321-0335-00			RES.,FXD,FILM:30.1K OHM,1%,0.125W	75042	CEAT0-3012F
R1762	315-0203-00			RES.,FXD,COMP:20K OHM,5%,0.25W	01121	CB2035
R1764	321-0452-00			RES.,FXD,FILM:499K OHM,1%,0.125W	75042	CEAT0-4993F
R1766	321-0414-00			RES.,FXD,FILM:200K OHM,1%,0.125W	75042	CEAT0-2003F
R1768	321-0280-00			RES.,FXD,FILM:8.06K OHM,1%,0.125W	75042	CEAT0-8061F
R1769	321-0354-00			RES.,FXD,FILM:47.5K OHM,1%,0.125W	75042	CEAT0-4752F
R1770	321-0346-00			RES.,FXD,FILM:39.2K OHM,1%,0.125W	75042	CEAT0-3922F
R1773	321-0193-00			RES.,FXD,FILM:1K OHM,1%,0.125W	75042	CEAT0-1001F
R1774	321-0300-00			RES.,FXD,FILM:13K OHM,1%,0.125W	75042	CEAT0-1302F
R1777	321-0306-00			RES.,FXD,FILM:15K OHM,1%,0.125W	75042	CEAT0-1502F
R1779	311-1225-00			RES.,VAR,NONWIR:1K OHM,20%,0.50W	80294	3389F-P31-102
R1781	321-0306-00			RES.,FXD,FILM:15K OHM,1%,0.125W	75042	CEAT0-1502F
R1783	311-1228-00			RES.,VAR,NONWIR:10K OHM,20%,0.50W	80294	3389F-P31-103
R1785	321-0323-00			RES.,FXD,FILM:22.6K OHM,1%,0.125W	75042	CEAT0-2262F
R1787	315-0222-00			RES.,FXD,COMP:2.2K OHM,5%,0.25W	01121	CB2225
R1788	315-0752-00			RES.,FXD,COMP:7.5K OHM,5%,0.25W	01121	CB7525
R1791	315-0822-00			RES.,FXD,COMP:8.2K OHM,5%,0.25W	01121	CB8225
R1792	322-0385-00			RES.,FXD,FILM:100K OH,,1%,0.25W	75042	CEBT0-1003F
R1793	315-0201-00			RES.,FXD,COMP:200 OHM,5%,0.25W	01121	CB2015
R1795	315-0103-00			RES.,FXD,COMP:10K OHM,5%,0.25W	01121	CB1035
R1796	315-0203-00			RES.,FXD,COMP:20K OHM,5%,0.25W	01121	CB2035
R1798	315-0102-00			RES.,FXD,COMP:1K OHM,5%,0.25W	01121	CB1025
R1799	315-0471-00			RES.,FXD,COMP:470 OHM,5%,0.25W	01121	CB4715
R1801	315-0153-00	B010100	B149999X	RES.,FXD,COMP:15K OHM,5%,0.25W	01121	CB1535
R1802	315-0153-00			RES.,FXD,COMP:15K OHM,5%,0.25W	01121	CB1535
R1803	315-0153-00			RES.,FXD,COMP:15K OHM,5%,0.25W	01121	CB1535
R1806	321-0382-00			RES.,FXD,FILM:93.1K OHM,1%,0.125W	75042	CEAT0-9312F
R1808	315-0203-00			RES.,FXD,COMP:20K OHM,5%,0.25W	01121	CB2035
R1809	315-0623-00			RES.,FXD,COMP:62K OHM,5%,0.25W	01121	CB6235
R1811	321-0337-00			RES.,FXD,FILM:31.6K OHM,1%,0.125W	75042	CEAT0-3162F
R1812	321-0424-00			RES.,FXD,FILM:255K OHM,1%,0.125W	75042	CEAT0-2553F
R1814	315-0304-00			RES.,FXD,COMP:300K OHM,5%,0.25W	01121	CB3045
R1817	315-0333-00			RES.,FXD,COMP:33K OHM,5%,0.25W	01121	CB3335
R1818	315-0103-00			RES.,FXD,COMP:10K OHM,5%,0.25W	01121	CB1035
R1819	315-0103-00			RES.,FXD,COMP:10K OHM,5%,0.25W	01121	CB1035
R1820	315-0104-00			RES.,FXD,COMP:100K OHM,5%,0.25W	01121	CB1045
R1822	321-0457-00			RES.,FXD,FILM:562K OHM,1%,0.125W	91637	MFF1816G56202F
R1823	321-0382-00			RES.,FXD,FILM:93.1K OHM,1%,0.125W	75042	CEAT0-9312F
R1826	315-0223-00			RES.,FXD,COMP:22K OHM,5%,0.25W	01121	CB2235
R1829	315-0471-00			RES.,FXD,COMP:470 OHM,5%,0.25W	01121	CB4715
R1830	315-0753-00			RES.,FXD,COMP:75K OHM,5%,0.25W	01121	CB7535
R1832	303-0823-00			RES.,FXD,COMP:82K OHM,5%,1W	01121	GB8235
R1833	303-0823-00			RES.,FXD,COMP:82K OHM,5%,1W	01121	GB8235

http://manuals.sphil.com

Ckt No.	Tektronix Part No.	Serial/Model No. Eff	Dscont	Name & Description	Mfr Code	Mfr Part Number
R1835	315-0471-00			RES.,FXD,COMP:470 OHM,5%,0.25W	01121	CB4715
R1838	321-0423-00			RES.,FXD,FILM:249K OHM,1%,0.125W	75042	CEAT0-2493F
R1840	315-0203-00			RES.,FXD,COMP:20K OHM,5%,0.25W	01121	CB2035
R1841	315-0623-00			RES.,FXD,COMP:62K OHM,5%,0.25W	01121	CB6235
R1842	315-0203-00			RES.,FXD,COMP:20K OHM,5%,0.25W	01121	CB2035
R1844	315-0203-00			RES.,FXD,COMP:20K OHM,5%,0.25W	01121	CB2035
R1847	321-0297-00			RES.,FXD,FILM:12.1K OHM,1%,0.125W	75042	CEAT0-1212F
R1849	321-0406-00			RES.,FXD,FILM:165K OHM,1%,0.125W	75042	CEAT0-1653F
R1851	315-0103-00			RES.,FXD,COMP:10K OHM,5%,0.25W	01121	CB1035
R1852	315-0103-00			RES.,FXD,COMP:10K OHM,5%,0.25W	01121	CB1035
R1855	315-0104-00			RES.,FXD,COMP:100K OHM,5%,0.25W	01121	CB1045
R1856	321-0466-00			RES.,FXD,FILM:698K OHM,1%,0.125W	75042	CEAT0-6983F
R1857	321-0379-00			RES.,FXD,FILM:86.6K OHM,1%,0.125W	75042	CEAT0-8662F
R1859	315-0104-00			RES.,FXD,COMP:100K OHM,5%,0.25W	01121	CB1045
R1862	301-0393-00			RES.,FXD,COMP:39K OHM,5%,0.50W	01121	EB3935
R1863	321-0452-00			RES.,FXD,FILM:499K OHM,1%,0.125W	75042	CEAT0-4993F
R1865	321-0352-00			RES.,FXD,FILM:45.3K OHM,1%,0.125W	75042	CEAT0-4532F
R1866	321-0358-00			RES.,FXD,FILM:52.3K OHM,1%,0.125W	75042	CEAT0-5232F
R1867	321-0385-00			RES.,FXD,FILM:100K OHM,1%,0.125W	75042	CEAT0-1003F
R1869	315-0222-00			RES.,FXD,COMP:2.2K OHM,5%,0.25W	01121	CB2225
R1871	321-0444-00			RES.,FXD,FILM:412K OHM,1%,0.125W	75042	CEAT0-4123F
R1873	321-0445-00			RES.,FXD,FILM:422K OHM,1%,0.125W	75042	CEAT0-4223F
R1875	321-0409-00			RES.,FXD,FILM:178K OHM,1%,0.125W	75042	CEAT0-1783F
R1876	321-0379-00			RES.,FXD,FILM:86.6K OHM,1%,0.125W	75042	CEAT0-8662F
R1878	321-0411-00			RES.,FXD,FILM:187K OHM,1%,0.125W	75042	CEAT0-1873F
R1880	315-0104-00			RES.,FXD,COMP:100K OHM,5%,0.25W	01121	CB1045
R1883	315-0393-00			RES.,FXD,COMP:39K OHM,5%,0.25W	01121	CB3935
R1885	321-0452-00			RES.,FXD,FILM:499K OHM,1%,0.125W	75042	CEAT0-4993F
R1886	315-0222-00			RES.,FXD,COMP:2.2K OHM,5%,0.25W	01121	CB2225
R1890	321-0449-00			RES.,FXD,FILM:464K OHM,1%,0.125W	75042	CEAT0-4643F
R1892	315-0392-00			RES.,FXD,COMP:3.9K OHM,5%,0.25W	01121	CB3925
R1893	315-0392-00			RES.,FXD,COMP:3.9K OHM,5%,0.25W	01121	CB3925
R1895	315-0393-00			RES.,FXD,COMP:39K OHM,5%,0.25W	01121	CB3935
R1897	321-0397-00			RES.,FXD,FILM:133K OHM,1%,0.125W	75042	CEAT0-1333F
R1900	321-0400-00			RES.,FXD,FILM:143K OHM,1%,0.125W	75042	CEAT0-1433F
R1903	315-0824-00			RES.,FXD,COMP:820K OHM,5%,0.25W	01121	CB8245
R1906	301-0363-00			RES.,FXD,COMP:36K OHM,5%,0.50W	01121	EB3635
R1908	321-0452-00			RES.,FXD,FILM:499K OHM,1%,0.125W	75042	CEAT0-4993F
R1910	315-0102-00			RES.,FXD,COMP:1K OHM,5%,0.25W	01121	CB1025
R1911						
R1912	315-0102-00			RES.,FXD,COMP:1K OHM,5%,0.25W	01121	CB1025
R1917	315-0472-00			RES.,FXD,COMP:4.7K OHM,5%,0.25W	01121	CB4725
R1919	315-0472-00			RES.,FXD,COMP:4.7K OHM,5%,0.25W	01121	CB4725
R1920	315-0472-00			RES.,FXD,COMP:4.7K OHM,5%,0.25W	01121	CB4725
R1922	315-0105-00			RES.,FXD,COMP:1M OHM,5%,0.25W	01121	CB1055
R1923	315-0473-00			RES.,FXD,COMP:47K OHM,5%,0.25W	01121	CB4735
R1924	315-0912-00			RES.,FXD,COMP:9.1K OHM,5%,0.25W	01121	CB9125
R1925	315-0302-00			RES.,FXD,COMP:3K OHM,5%,0.25W	01121	CB3025
R1926	315-0911-00			RES.,FXD,COMP:910 OHM,5%,0.25W	01121	CB9115
R1928	315-0823-00			RES.,FXD,COMP:82K OHM,5%,0.25W	01121	CB8235
R1929[1]						
R1930	308-0290-00			RES.,FXD,WW:8 OHM,5%,5W	91637	H11205Z7820R0J
R1942	301-0564-00			RES.,FXD,COMP:560K OHM,5%,0.50W	01121	EB5645

[1]Furnished with CRT Socket Cable.

http://mo.tan.sqhil.com

Ckt No.	Tektronix Part No.	Serial/Model No. Eff	Dscont	Name & Description	Mfr Code	Mfr Part Number
R1981	307-0106-00			RES.,FXD,COMP:4.7 OHM,5%,0.25W	01121	CB47G5
R1983	307-0103-00			RES.,FXD,COMP:2.7 OHM,5%,0.25W	01121	CB27G5
R1987	307-0103-00			RES.,FXD,COMP:2.7 OHM,5%,0.25W	01121	CB27G5
R1989	315-0100-00			RES.,FXD,COMP:10 OHM,5%,0.25W	01121	CB1005
R2101	315-0682-00			RES.,FXD,COMP:6.8K OHM,5%,0.25W	01121	CB6825
R2102	315-0103-00			RES.,FXD,COMP:10K OHM,5%,0.25W	01121	CB1035
R2104	315-0333-00			RES.,FXD,COMP:33K OHM,5%,0.25W	01121	CB3335
R2105	315-0153-00			RES.,FXD,COMP:15K OHM,5%,0.25W	01121	CB1535
R2107	315-0510-00			RES.,FXD,COMP:51 OHM,5%,0.25W	01121	CB5105
R2108	315-0512-00			RES.,FXD,COMP:5.1K OHM,5%,0.25W	01121	CB5125
R2109	315-0221-00			RES.,FXD,COMP:220 OHM,5%,0.25W	01121	CB2215
R2112	315-0102-00			RES.,FXD,COMP:1K OHM,5%,0.25W	01121	CB1025
R2113	315-0301-00			RES.,FXD,COMP:300 OHM,5%,0.25W	01121	CB3015
R2122	315-0432-00			RES.,FXD,COMP:4.3K OHM,5%,0.25W	01121	CB4325
R2123	315-0683-00			RES.,FXD,COMP:68K OHM,5%,0.25W	01121	CB6835
R2127	315-0302-00			RES.,FXD,COMP:3K OHM,5%,0.25W	01121	CB3025
R2128	311-1263-00			RES.,VAR,NONWIR:1K OHM,10%,0.50W	73138	62PT-347-0
R2129	315-0183-00			RES.,FXD,COMP:18K OHM,5%,0.25W	01121	CB1835
R2135	315-0393-00			RES.,FXD,COMP:39K OHM,5%,0.25W	01121	CB3935
R2137	315-0752-00			RES.,FXD,COMP:7.5K OHM,5%,0.25W	01121	CB7525
R2139	315-0242-00			RES.,FXD,COMP:2.4K OHM,5%,0.25W	01121	CB2425
R2144	315-0104-00			RES.,FXD,COMP:100K OHM,5%,0.25W	01121	CB1045
R2146	315-0152-00			RES.,FXD,COMP:1.5K OHM,5%,0.25W	01121	CB1525
R2148	315-0103-00			RES.,FXD,COMP:10K OHM,5%,0.25W	01121	CB1035
R2150	321-0403-00			RES.,FXD,FILM:154K OHM,1%,0.125W	75042	CEAT0-1543F
R2151	321-0372-00			RES.,FXD,FILM:73.2K OHM,1%,0.125W	75042	CEAT0-7322F
R2153	315-0103-00			RES.,FXD,COMP:10K OHM,5%,0.25W	01121	CB1035
R2155	315-0512-00			RES.,FXD,COMP:5.1K OHM,5%,0.25W	01121	CB5125
R2158	315-0152-00			RES.,FXD,COMP:1.5K OHM,5%,0.25W	01121	CB1525
R2161	315-0102-00			RES.,FXD,COMP:1K OHM,5%,0.25W	01121	CB1025
R2162	315-0751-00			RES.,FXD,COMP:750 OHM,5%,0.25W	01121	CB7515
R2163	315-0751-00			RES.,FXD,COMP:750 OHM,5%,0.25W	01121	CB7515
R2165	315-0102-00			RES.,FXD,COMP:1K OHM,5%,0.25W	01121	CB1025
R2166	315-0751-00			RES.,FXD,COMP:750 OHM,5%,0.25W	01121	CB7515
R2167	315-0751-00			RES.,FXD,COMP:750 OHM,5%,0.25W	01121	CB7515
R2169	315-0102-00			RES.,FXD,COMP:1K OHM,5%,0.25W	01121	CB1025
R2170	315-0751-00			RES.,FXD,COMP:750 OHM,5%,0.25W	01121	CB7515
R2171	315-0751-00			RES.,FXD,COMP:750 OHM,5%,0.25W	01121	CB7515
R2173	315-0102-00			RES.,FXD,COMP:1K OHM,5%,0.25W	01121	CB1025
R2174	315-0751-00			RES.,FXD,COMP:750 OHM,5%,0.25W	01121	CB7515
R2175	315-0751-00			RES.,FXD,COMP:750 OHM,5%,0.25W	01121	CB7515
R2177	315-0511-00			RES.,FXD,COMP:510 OHM,5%,0.25W	01121	CB5115
R2178	315-0511-00			RES.,FXD,COMP:510 OHM,5%,0.25W	01121	CB5115
R2179	315-0511-00			RES.,FXD,COMP:510 OHM,5%,0.25W	01121	CB5115
R2182	321-0262-00			RES.,FXD,FILM:5.23K OHM,1%,0.125W	75042	CEAT0-5231F
R2183	311-1224-00			RES.,VAR,NONWIR:500 OHM,20%,0.50W	80294	3389F-P31-501
R2191	315-0513-00			RES.,FXD,COMP:51K OHM,5%,0.25W	01121	CB5135
R2192	315-0133-00			RES.,FXD,COMP:13K OHM,5%,0.25W	01121	CB1335
R2193	315-0133-00			RES.,FXD,COMP:13K OHM,5%,0.25W	01121	CB1335
R2194	315-0753-00			RES.,FXD,COMP:75K OHM,5%,0.25W	01121	CB7535
R2196	321-0308-00			RES.,FXD,FILM:15.8K OHM,1%,0.125W	75042	CEAT0-1582F
R2197	315-0513-00			RES.,FXD,COMP:51K OHM,5%,0.25W	01121	CB5135
R2198	321-0319-00			RES.,FXD,FILM:20.5K OHM,1%,0.125W	75042	CEAT0-2052F

http://tekscan.squiley.com

Ckt No.	Tektronix Part No.	Serial/Model No. Eff	Dscont	Name & Description	Mfr Code	Mfr Part Number
R2199	321-0335-00			RES.,FXD,FILM:30.1K OHM,1%,0.125W	75042	CEAT0-3012F
R2201	315-0154-00			RES.,FXD,COMP:150K OHM,5%,0.25W	01121	CB1545
R2202	321-0335-00			RES.,FXD,FILM:30.1K OHM,1%,0.125W	75042	CEAT0-3012F
R2203	321-0344-00			RES.,FXD,FILM:37.4K OHM,1%,0.125W	75042	CEAT0-3742F
R2204	321-0335-00			RES.,FXD,FILM:30.1K OHM,1%,0.125W	75042	CEAT0-3012F
R2206	315-0513-00			RES.,FXD,COMP:51K OHM,5%,0.25W	01121	CB5135
R2207	315-0154-00			RES.,FXD,COMP:150K OHM,5%,0.25W	01121	CB1545
R2208	321-0335-00			RES.,FXD,FILM:30.1K OHM,1%,0.125W	75042	CEAT0-3012F
R2209	321-0335-00			RES.,FXD,FILM:30.1K OHM,1%,0.125W	75042	CEAT0-3012F
R2211	315-0752-00			RES.,FXD,COMP:7.5K OHM,5%,0.25W	01121	CB7525
R2213	321-0259-00			RES.,FXD,FILM:4.87K OHM,1%,0.125W	75042	CEAT0-4871F
R2214	311-1224-00			RES.,VAR,NONWIR:500 OHM,20%,0.50W	80294	3389F-P31-501
R2215	315-0133-00			RES.,FXD,COMP:13K OHM,5%,0.25W	01121	CB1335
R2217	315-0124-00			RES.,FXD,COMP:120K OHM,5%,0.25W	01121	CB1245
R2219	315-0751-00			RES.,FXD,COMP:750 OHM,5%,0.25W	01121	CB7515
R2220	321-0299-00			RES.,FXD,FILM:12.7K OHM,1%,0.125W	75042	CEAT0-1272F
R2221	321-0212-00			RES.,FXD,FILM:1.58K OHM,1%,0.125W	75042	CEAT0-1581F
R2226	315-0222-00			RES.,FXD,COMP:2.2K OHM,5%,0.25W	01121	CB2225
R2227	321-0268-00			RES.,FXD,FILM:6.04K OHM,1%,0.125W	75042	CEAT0-6041F
R2229	321-0210-00			RES.,FXD,FILM:1.5K OHM,1%,0.125W	75042	CEAT0-1501F
R2231	315-0303-00			RES.,FXD,COMP:30K OHM,5%,0.25W	01121	CB3035
R2235	315-0203-00			RES.,FXD,COMP:20K OHM,5%,0.25W	01121	CB2035
R2236	315-0203-00			RES.,FXD,COMP:20K OHM,5%,0.25W	01121	CB2035
R2237	315-0203-00			RES.,FXD,COMP:20K OHM,5%,0.25W	01121	CB2035
R2238	315-0203-00			RES.,FXD,COMP:20K OHM,5%,0.25W	01121	CB2035
R2241	321-0326-00			RES.,FXD,FILM:24.3K OHM,1%,0.125W	75042	CEAT0-2432F
R2251	315-0102-00			RES.,FXD,COMP:1K OHM,5%,0.25W	01121	CB1025
R2252	315-0102-00			RES.,FXD,COMP:1K OHM,5%,0.25W	01121	CB1025
R2253	315-0102-00			RES.,FXD,COMP:1K OHM,5%,0.25W	01121	CB1025
R2254	315-0303-00			RES.,FXD,COMP:30K OHM,5%,0.25W	01121	CB3035
R2261	315-0272-00			RES.,FXD,COMP:2.7K OHM,5%,0.25W	01121	CB2725
R2262	315-0102-00			RES.,FXD,COMP:1K OHM,5%,0.25W	01121	CB1025
R2265	315-0512-00			RES.,FXD,COMP:5.1K OHM,5%,0.25W	01121	CB5125
R2266	315-0912-00			RES.,FXD,COMP:9.1K OHM,5%,0.25W	01121	CB9125
R2268	321-0296-00			RES.,FXD,FILM:11.8K OHM,1%,0.125W	75042	CEAT0-1182F
R2273	311-1226-00			RES.,VAR,NONWIR:2.5K OHM,20%,0.50W	80294	3389F-P31-252
R2274	321-0153-00			RES.,FXD,FILM:383 OHM,1%,0.125W	75042	CEAT0-3830F
R2275	321-0170-00			RES.,FXD,FILM:576 OHM,1%,0.125W	75042	CEAT0-5760F
R2276	315-0223-00			RES.,FXD,COMP:22K OHM,5%,0.25W	01121	CB2235
R2277	321-0250-00			RES.,FXD,FILM:3.92K OHM,1%,0.125W	75042	CEAT0-3921F
R2278	315-0823-00			RES.,FXD,COMP:82K OHM,5%,0.25W	01121	CB8235
R2279	321-0222-00			RES.,FXD,FILM:2K OHM,1%,0.125W	75042	CEAT0-2001F
R2280	315-0823-00			RES.,FXD,COMP:82K OHM,5%,0.25W	01121	CB8235
R2281	315-0101-00	XB040000		RES.,FXD,COMP:100 OHM,5%,0.25W	01121	CB1015
R2282	315-0332-00			RES.,FXD,COMP:3.3K OHM,5%,0.25W	01121	CB3325
R2283	315-0753-00			RES.,FXD,COMP:75K OHM,5%,0.25W	01121	CB7535
R2284	321-0216-00			RES.,FXD,FILM:1.74K OHM,1%,0.125W	75042	CEAT0-1741F
R2285	321-0245-00			RES.,FXD,FILM:3.48K OHM,1%,0.125W	75042	CEAT0-3481F
R2286	321-0209-00			RES.,FXD,FILM:1.47K OHM,1%,0.125W	75042	CEAT0-1471F
R2287	321-0199-00			RES.,FXD,FILM:1.15K OHM,1%,0.125W	75042	CEAT0-1151F
R2288	321-0273-00			RES.,FXD,FILM:6.81K OHM,1%,0.125W	75042	CEAT0-6811F
R2289	321-0193-00			RES.,FXD,FILM:1K OHM,1%,0.125W	75042	CEAT0-1001F
R2291	311-1225-00			RES.,VAR,NONWIR:1K OHM,20%,0.50W	80294	3389F-P31-102

http://manuals.sqlabs.com

Ckt No.	Tektronix Part No.	Serial/Model No. Eff	Dscont	Name & Description	Mfr Code	Mfr Part Number
R2292	315-0132-00			RES.,FXD,COMP:1.3K OHM,5%,0.25W	01121	CB1325
R2293	321-0245-00			RES.,FXD,FILM:3.48K OHM,1%,0.125W	75042	CEAT0-3481F
R2294	321-0255-00			RES.,FXD,FILM:4.42K OHM,1%,0.125W	75042	CEAT0-4421F
R2295	321-0241-00			RES.,FXD,FILM:3.16K OHM,1%,0.125W	75042	CEAT0-3161F
R2297	315-0152-00			RES.,FXD,COMP:1.5K OHM,5%,0.25W	01121	CB1525
R2298	315-0102-00			RES.,FXD,COMP:1K OHM,5%,0.25W	01121	CB1025
R2299	315-0431-00			RES.,FXD,COMP:430 OHM,5%,0.25W	01121	CB4315
R2329	323-0131-00			RES.,FXD,FILM:226 OHM,1%,0.50W	75042	CECT0-2260F
R2331	315-0912-00			RES.,FXD,COMP:9.1K OHM,5%,0.25W	01121	CB9125
R2333	321-1068-01			RES.,FXD,FILM:50.5 OHM,0.5%,0.125W	75042	CEAT0-50R50D
R2335	321-1068-01			RES.,FXD,FILM:50.5 OHM,0.5%,0.125W	75042	CEAT0-50R50D
R2337	321-1068-01			RES.,FXD,FILM:50.5 OHM,0.5%,0.125W	75042	CEAT0-50R50D
R2339	321-1068-01			RES.,FXD,FILM:50.5 OHM,0.5%,0.125W	75042	CEAT0-50R50D
R2341	315-0100-00			RES.,FXD,COMP:10 OHM,5%,0.25W	01121	CB1005
R2343	321-0082-02			RES.,FXD,FILM:69.8 OHM,0.5%,0.125W	91637	MFF1816D69R80D
R2345	315-0622-00			RES.,FXD,COMP:6.2K OHM,5%,0.25W	01121	CB6225
R2347	321-0193-01			RES.,FXD,FILM:1K OHM,0.5%,0.125W	75042	CEAT0-1001D
R2349	321-0193-01			RES.,FXD,FILM:1K OHM,0.5%,0.125W	75042	CEAT0-1001D
R2351	322-0212-00			RES.,FXD,FILM:1.58K OHM,1%,0.25W	75042	CEBT0-1581F
R2353	321-0082-02			RES.,FXD,FILM:69.8 OHM,0.5%,0.125W	91637	MFF1816D69R80D
R2355	315-0622-00			RES.,FXD,COMP:6.2K OHM,5%,0.25W	01121	CB6225
R2357	321-0193-01			RES.,FXD,FILM:1K OHM,0.5%,0.125W	75042	CEAT0-1001D
R2359	321-0193-01			RES.,FXD,FILM:1K OHM,0.5%,0.125W	75042	CEAT0-1001D
R2362	321-0044-00			RES.,FXD,FILM:28 OHM,1%,0.125W	75042	CEAT0-28R00F
R2364	321-0069-00			RES.,FXD,FILM:51.1 OHM,1%,0.125W	75042	CEAT0-51R10F
R2366	315-0240-00			RES.,FXD,COMP:24 OHM,5%,0.25W	01121	CB2405
R2368	315-0911-00			RES.,FXD,COMP:910 OHM,5%,0.25W	01121	CB9115
R2369	322-0182-00			RES.,FXD,FILM:768 OHM,1%,0.25W	91637	MFF1421G768R0F
R2372	321-0044-00			RES.,FXD,FILM:28 OHM,1%,0.125W	75042	CEAT0-28R00F
R2374	321-0069-00			RES.,FXD,FILM:51.1 OHM,1%,0.125W	75042	CEAT0-51R10F
R2376	315-0240-00			RES.,FXD,COMP:24 OHM,5%,0.25W	01121	CB2405
R2378	315-0911-00			RES.,FXD,COMP:910 OHM,5%,0.25W	01121	CB9115
R2379	322-0182-00			RES.,FXD,FILM:768 OHM,1%,0.25W	91637	MFF1421G768R0F
R2384	321-0203-00			RES.,FXD,FILM:1.27K OHM,1%,0.125W	75042	CEAT0-1271F
R2386	321-0141-00			RES.,FXD,FILM:287 OHM,1%,0.125W	75042	CEAT0-2870F
R2387	321-0062-00			RES.,FXD,FILM:43.2 OHM,1%,0.125W	75042	CEAT0-43R20F
R2390	321-0227-00			RES.,FXD,FILM:2.26K OHM,1%,0.125W	75042	CEAT0-2261F
R2393	323-0085-00			RES.,FXD,FILM:75 OHM,1%,0.5W	75042	CECT0-75R00F
R2394	321-0203-00			RES.,FXD,FILM:1.27K OHM,1%,0.125W	75042	CEAT0-1271F
R2396	321-0141-00			RES.,FXD,FILM:287 OHM,1%,0.125W	75042	CEAT0-2870F
R2397	321-0062-00			RES.,FXD,FILM:43.2 OHM,1%,0.125W	75042	CEAT0-43R20F
R2402	322-0645-00			RES.,FXD,FILM:52.5 OHM,0.5%,0.25W	75042	CEBT0-52R50D
R2403	323-0079-00			RES.,FXD,FILM:64.9 OHM,1%,0.50W	75042	CECT0-64R90F
R2405	323-0093-00			RES.,FXD,FILM:90.9 OHM,1%,0.50W	75042	CECT0-90R90F
R2407	315-0511-00			RES.,FXD,COMP:510 OHM,5%,0.25W	01121	CB5115
R2409	311-1231-00			RES.,VAR,NONWIR:25K OHM,20%,0.50W	80294	3389F-P31-253
R2411	311-1466-00			RES.,VAR,NONWIR:2K OHM,20%,0.50W	73138	72PM-08-0-202
R2412	315-0470-00			RES.,FXD,COMP:47 OHM,5%,0.25W	01121	CB4705
R2416	311-1260-00			RES.,VAR,NONWIR:250 OHM,10%,0.50W	73138	62PT-345-0
R2418	311-1259-00			RES.,VAR,NONWIR:100 OHM,10%,0.50W	80294	3329P-L58-101
R2419	321-0117-00			RES.,FXD,FILM:162 OHM,1%,0.125W	75042	CEAT0-1620F
R2421	323-0134-00			RES.,FXD,FILM:243 OHM,1%,0.50W	91637	MFF1226G243R0F
R2423	321-0163-00			RES.,FXD,FILM:487 OHM,1%,0.125W	75042	CEAT0-4870F

http://service.tektronix.com

Ckt No.	Tektronix Part No.	Serial/Model No. Eff	Dscont	Name & Description	Mfr Code	Mfr Part Number
R2425	315-0223-00			RES.,FXD,COMP:22K OHM,5%,0.25W	01121	CB2235
R2426	315-0562-00			RES.,FXD,COMP:5.6K OHM,5%,0.25W	01121	CB5625
R2427	315-0562-00			RES.,FXD,COMP:5.6K OHM,5%,0.25W	01121	CB5625
R2429	315-0432-00			RES.,FXD,COMP:4.3K OHM,5%,0.25W	01121	CB4325
R2430	315-0471-00			RES.,FXD,COMP:470 OHM,5%,0.25W	01121	CB4715
R2432	321-0297-00			RES.,FXD,FILM:12.1K OHM,1%,0.125W	75042	CEAT0-1212F
R2433	311-1224-00			RES.,VAR,NONWIR:500 OHM,20%,0.50W	80294	3389F-P31-501
R2434	315-0221-00			RES.,FXD,COMP:220 OHM,5%,0.25W	01121	CB2215
R2436	321-0068-00			RES.,FXD,FILM:49.9 OHM,1%,0.125W	75042	CEAT0-49R90F
R2438	315-0121-00			RES.,FXD,COMP:120 OHM,5%,0.25W	01121	CB1215
R2439	315-0104-00			RES.,FXD,COMP:100K OHM,5%,0.25W	01121	CB1045
R2442	315-0101-00			RES.,FXD,COMP:100 OHM,5%,0.25W	01121	CB1015
R2445	315-0201-00			RES.,FXD,COMP:200 OHM,5%,0.25W	01121	CB2015
R2446	311-1266-00			RES.,VAR,NONWIR:2.5K OHM,10%,0.50W	73138	62PT-349-0
R2448	321-0093-00			RES.,FXD,FILM:90.9 OHM,1%,0.125W	75042	CEAT0-90R90F
R2455	323-0105-00			RES.,FXD,FILM:121 OHM,1%,0.50W	75042	CECT0-1210F
R2456	321-0067-00			RES.,FXD,FILM:48.7 OHM,1%,0.125W	75042	CEAT0-48R70F
R2458	315-0103-00			RES.,FXD,COMP:10K OHM,5%,0.25W	01121	CB1035
R2461	315-0104-00			RES.,FXD,COMP:100K OHM,5%,0.25W	01121	CB1045
R2463	315-0622-00			RES.,FXD,COMP:6.2K OHM,5%,0.25W	01121	CB6225
R2465	315-0330-00			RES.,FXD,COMP:33 OHM,5%,0.25W	01121	CB3305
R2466	315-0330-00			RES.,FXD,COMP:33 OHM,5%,0.25W	01121	CB3305
R2468	315-0820-00			RES.,FXD,COMP:82 OHM,5%,0.25W	01121	CB8205
R2470	308-0758-00			RES.,FXD,WW:430 OHM,1%,7W	14193	SAX70-430R0F
R2501	322-0645-00			RES.,FXD,FILM:52.5 OHM,0.5%,0.25W	75042	CEBT0-52R50D
R2505	323-0093-00			RES.,FXD,FILM:90.9 OHM,1%,0.50W	75042	CECT0-90R90F
R2507	315-0201-00			RES.,FXD,COMP:200 OHM,5%,0.25W	01121	CB2015
R2509	311-1228-00			RES.,VAR,NONWIR:10K OHM,20%,0.50W	80294	3389F-P31-103
R2510	315-0112-00			RES.,FXD,COMP:1.1K OHM,5%,0.25W	01121	CB1125
R2511	311-1225-00			RES.,VAR,NONWIR:1K OHM,20%,0.50W	80294	3389F-P31-102
R2512	315-0470-00			RES.,FXD,COMP:47 OHM,5%,0.25W	01121	CB4705
R2514	315-0474-00			RES.,FXD,COMP:470K OHM,5%,0.25W	01121	CB4745
R2515	315-0103-00			RES.,FXD,COMP:10K OHM,5%,0.25W	01121	CB1035
R2516	315-0124-00			RES.,FXD,COMP:120K OHM,5%,0.25W	01121	CB1245
R2517	315-0104-00			RES.,FXD,COMP:100K OHM,5%,0.25W	01121	CB1045
R2519	311-1260-00			RES.,VAR,NONWIR:250 OHM,10%,0.50W	73138	62PT-345-0
R2521	323-0134-00			RES.,FXD,FILM:243 OHM,1%,0.50W	91637	MFF1226G243R0F
R2523	323-0176-00			RES.,FXD,FILM:665 OHM,1%,0.50W	75042	CECT0-6650F
R2524	321-0204-00			RES.,FXD,FILM:1.3K OHM,1%,0.125W	75042	CEAT0-1301F
R2526	321-0143-00			RES.,FXD,FILM:301 OHM,1%,0.125W	75042	CEAT0-3010F
R2527	311-1222-00			RES.,VAR,NONWIR:100 OHM,20%,0.50W	80294	3389F-P31-101
R2530	315-0391-00			RES.,FXD,COMP:390 OHM,5%,0.25W	01121	CB3915
R2532	321-0331-00			RES.,FXD,FILM:27.4K OHM,1%,0.125W	75042	CEAT0-2742F
R2533	321-0172-00			RES.,FXD,FILM:604 OHM,1%,0.125W	75042	CEAT0-6040F
R2534	321-0233-00			RES.,FXD,FILM:2.61K OHM,1%,0.125W	75042	CEAT0-2611F
R2536	321-0068-00			RES.,FXD,FILM:49.9 OHM,1%,0.125W	75042	CEAT0-49R90F
R2537	323-0177-00			RES.,FXD,FILM:680 OHM,1%,0.50W	75042	CECT0-6810F
R2538	315-0121-00			RES.,FXD,COMP:120 OHM,5%,0.25W	01121	CB1215
R2539	315-0683-00			RES.,FXD,COMP:68K OHM,5%,0.25W	01121	CB6835
R2542	315-0101-00			RES.,FXD,COMP:100 OHM,5%,0.25W	01121	CB1015
R2545	315-0201-00			RES.,FXD,COMP:200 OHM,5%,0.25W	01121	CB2015
R2548	321-0093-00			RES.,FXD,FILM:90.9 OHM,1%,0.125W	75042	CEAT0-90R90F
R2550	321-0181-00			RES.,FXD,FILM:750 OHM,1%,0.125W	75042	CEAT0-7500F

http://manuals.sqhill.com

Ckt No.	Tektronix Part No.	Serial/Model No. Eff	Dscont	Name & Description	Mfr Code	Mfr Part Number
R2551	321-0181-00			RES.,FXD,FILM:750 OHM,1%,0.125W	75042	CEAT0-7500F
R2553	301-0750-00			RES.,FXD,COMP:75 OHM,5%,0.50W	01121	EB7505
R2555	323-0105-00			RES.,FXD,FILM:121 OHM,1%,0.50W	75042	CECT0-1210F
R2565	315-0330-00			RES.,FXD,COMP:33 OHM,5%,0.25W	01121	CB3305
R2566	315-0330-00			RES.,FXD,COMP:33 OHM,5%,0.25W	01121	CB3305
R2568	315-0820-00			RES.,FXD,COMP:82 OHM,5%,0.25W	01121	CB8205
R2570	308-0758-00			RES.,FXD,WW:430 OHM,1%,7W	14193	SAX70-430R0F
R2593	315-0120-00			RES.,FXD,COMP:12 OHM,5%,0.25W	01121	CB1205
R2597	323-0022-00			RES.,FXD,FILM:16.5 OHM,1%,0.50W	80009	323-0022-00
RT2463	307-0181-00			RES.,THERMAL:100K OHM,10%,4MW/DEG C	14193	2J05-104K
RT2507	307-0127-00			RES.,THERMAL:1K OHM,1%	50157	2D1596
RT2510	307-0124-00			RES.,THERMAL:5K OHM,10%	50157	1D1618
RT2517	307-0181-00			RES.,THERMAL:100K OHM,10%,4MW/DEG C	14193	2J05-104K
S659	260-0984-00			SWITCH,SLIDE:DP3POSN,0.5A,125VAC-DC	79727	G128S-PC/MOD7140
S1000	260-0724-00	B010100	B070599	SW,THERMOSTATIC:OPEN 83.3 DEG,CL 66.7 DEG C	93410	110181
S1000	260-1759-00	B070600		SW,THERMOSTATIC:OPEN 83.3 DEG,CL 66.7 DEG C	82647	20700L66-322
S1001	644-0056-00			SWITCH ASSY:POWER	80009	644-0056-00
S1011	260-1379-00			SWITCH,PUSH:TRIG SOURCE	71590	2KBC120000
S1021[1]	260-1378-00			SWITCH,PUSH:VERT MODE	71590	2KBC140000
S1095[2]	311-1055-00			RES.,VAR,NONWIR:1K OHM 20%,0.50W	12697	CM-40034
S1282[2]	311-1580-00			RES.,VAR,NONWIR:5K OHM,10%	01121	11M752
S1400	260-1593-00			SWITCH PUSH:FAST/VAR PERSIST/BI STABLE		OBD
S1417	260-1594-00			SWITCH PUSH:NON STORE/STORE/SAVE		OBD
S1430[3]	311-1580-00			RES.,VAR,NONWIR:5K OHM,10%	01121	11M752
S1488B[4]	311-1582-00			RES.,VAR,NONWIR:2 X 10K OHM,10%	01121	12M448
S1488C[5]	311-1582-00			RES.,VAR,NONWIR:2 X 10K OHM,10%	01121	12M448
S2110	260-0723-00			SWITCH,SLIDE:DPDT,0.5A,125VAC	80009	260-0723-00
T523	120-0546-00			XFMR,TOROID:4 TURNS BIFILAR	80009	120-0546-00
T801	120-0708-00			XFMR,PWR,STPDN:LV	80009	120-0708-00
T1199	120-0907-00	B010100	B019999	XFMR,PWR,STPDN:	80009	120-0907-00
T1199	120-0907-01	B020000		XFMR,PWR,STPDN:	80009	120-0907-01
U55	155-0011-00			MICROCIRCUIT,DI:ML,CLOCK AND CHOP BLANKING	80009	155-0011-00
U99	156-0048-00			MICROCIRCUIT,LI:FIVE NPN TRANSISTOR	86684	CA3046
U123	156-0041-00			MICROCIRCUIT,DI:DUAL D-TYPE FLIP-FLOP	27014	DM7474N
U156	156-0041-00			MICROCIRCUIT,DI:DUAL D-TYPE FLIP-FLOP	27014	DM7474N
U324	155-0022-00			MICROCIRCUIT,DI:ML CHANNEL SWITCH	80009	155-0022-00
U510	155-0022-00			MICROCIRCUIT,DI:ML CHANNEL SWITCH	80009	155-0022-00
U973	156-0065-00			MICROCIRCUIT,LI:FIVE NPN TRANSISTOR ARRAY	80009	156-0065-00
U1417	156-0043-00			MICROCIRCUIT,DI:2-INPUT NOR GATE	01295	SN7402N
U1495	156-0030-00			MICROCIRCUIT,DI:QUAD 2-INPUT POS NAND GATE	01295	SN7400N
U1497	156-0043-00			MICROCIRCUIT,DI:2-INPUT NOR GATE	01295	SN7402N
U1545	156-0172-00			MICROCIRCUIT,DI:DUAL MONOSTABLE MV	01295	SN74123N
U1555	156-0041-00			MICROCIRCUIT,DI:DUAL D-TYPE FLIP-FLOP	27014	DM7474N
U1605	156-0172-00			MICROCIRCUIT,DI:DUAL MONOSTABLE MV	01295	SN74123N
U1615	156-0172-00			MICROCIRCUIT,DI:DUAL MONOSTABLE MV	01295	SN74123N
U2120	156-0043-00			MICROCIRCUIT,DI:2-INPUT NOR GATE	01295	SN7402N
U2126	155-0021-01			MICROCIRCUIT,DI:ML,TIMING GENERATOR	80009	155-0021-01
U2155	156-0043-00			MICROCIRCUIT,DI:2-INPUT NOR GATE	01295	SN7402N
U2159	155-0017-00			MICROCIRCUIT,DI:ML,ZERO LOGICOUNTER	80009	155-0017-00
U2180	155-0015-01			MICROCIRCUIT,DI:ML,ANALOG DATA SWITCH	80009	155-0015-01
U2185	155-0014-01			MICROCIRCUIT,DI:ML,ANALOG TO DECIMAL CONV	80009	155-0014-01
U2190	155-0015-01			MICROCIRCUIT,DI:ML,ANALOG DATA SWITCH	80009	155-0015-01

[1]Furnished as a unit with R1095.
[2]Furnished as a unit with R1430 and S1430.
[3]Furnished as a unit with R1430 and S1282.
[4]Furnished as a unit with R1488A,B and S1488C.
[5]Furnished as a unit with R1488A,B and S1488B.

http://manuals.mcgraw-hill.com

Ckt No.	Tektronix Part No.	Serial/Model No. Eff	Dscont	Name & Description	Mfr Code	Mfr Part Number
U2232	155-0018-00			MICROCIRCUIT,DI:ZERO LOGIC	80009	155-0018-00
U2244	155-0014-01			MICROCIRCUIT,DI:ML,ANALOG TO DECIMAL CONV	80009	155-0014-01
U2250	156-0032-00			MICROCIRCUIT,DI:4-BIT BINARY COUNTER	01295	SN7493AN
U2260	155-0019-00			MICROCIRCUIT,DI:ML,DECIMAL POINT AND SPACE	80009	155-0019-00
U2270	155-0023-00			MICROCIRCUIT,DI:ML,CHAR GEN NUMERALS	80009	155-0023-00
U2272	155-0024-00			MICROCIRCUIT,DI:ML,CHAR GEN SPCL SYMBOLS	80009	155-0024-00
U2274	155-0025-00			MICROCIRCUIT,DI:ML,CHAR GEN PREFIXES	80009	155-0025-00
U2276	155-0026-00			MICROCIRCUIT,DI:ML,CHAR GEN LETTERS	80009	155-0026-00
U2278	155-0027-00			MICROCIRCUIT,DI:ML,CHAR GEN SPCL ALPHA	80009	155-0027-00
U2284	155-0020-00			MICROCIRCUIT,DI:ML,CHANNEL SW OUTPUT ASSY	80009	155-0020-00
U2340	155-0022-00			MICROCIRCUIT,DI:ML CHANNEL SWITCH	80009	155-0022-00
V1265	154-0721-00			ELECTRON TUBE:CRT	80009	154-0721-00
VR851	152-0283-00			SEMICOND DEVICE:ZENER,0.4W,43V,5%	04713	1N976B
VR890	152-0124-00			SEMICOND DEVICE:ZENER,0.5W,9V,5%	04713	1N938A
VR1109	152-0055-00			SEMICOND DEVICE:ZENER,0.4W,11V,5%	04713	1N962B
VR1151	152-0255-00			SEMICOND DEVICE:ZENER,0.4W,51V,5%	04713	1N978B
VR1233	152-0286-00			SEMICOND DEVICE:ZENER,0.4W,75V,5%	04713	1N982B
VR1243	152-0288-00			SEMICOND DEVICE:ZENER,0.4W,140V,5%	04713	4-10M14025
VR1707	152-0280-00			SEMICOND DEVICE:ZENER,0.4W,6.2V,5%	04713	1N753A
VR1793	152-0280-00			SEMICOND DEVICE:ZENER,0.4W,6.2V,5%	04713	1N753A
VR1831	152-0289-00			SEMICOND DEVICE:ZENER,0.4W,180V,5%	07910	1N991B
VR2262	152-0405-00			SEMICOND DEVICE:ZENER,1W,15V,5%	99942	1N5567B
VR2263	152-0405-00			SEMICOND DEVICE:ZENER,1W,15V,5%	99942	1N5567B
VR2264	152-0405-00			SEMICOND DEVICE:ZENER,1W,15V,5%	99942	1N5567B
VR2445	152-0279-00			SEMICOND DEVICE:ZENER,0.4W,5.1V,5%	07910	1N751A
VR2545	152-0279-00			SEMICOND DEVICE:ZENER,0.4W,5.1V,5%	07910	1N751A

http://manuals.hillcom

REPLACEABLE MECHANICAL PARTS

PARTS ORDERING INFORMATION

Replacement parts are available from or through your local Tektronix, Inc. Field Office or representative.

Changes to Tektronix instruments are sometimes made to accommodate improved components as they become available, and to give you the benefit of the latest circuit improvements developed in our engineering department. It is therefore important, when ordering parts, to include the following information in your order: Part number, instrument type or number, serial number, and modification number if applicable.

If a part you have ordered has been replaced with a new or improved part, your local Tektronix, Inc. Field Office or representative will contact you concerning any change in part number.

Change information, if any, is located at the rear of this manual.

SPECIAL NOTES AND SYMBOLS

X000	Part first added at this serial number
00X	Part removed after this serial number

FIGURE AND INDEX NUMBERS

Items in this section are referenced by figure and index numbers to the illustrations.

INDENTATION SYSTEM

This mechanical parts list is indented to indicate item relationships. Following is an example of the indentation system used in the description column.

```
1 2 3 4 5                    Name & Description

Assembly and/or Component
Attaching parts for Assembly and/or Component
                - - - * - - -
   Detail Part of Assembly and/or Component
   Attaching parts for Detail Part
                - - - * - - -
      Parts of Detail Part
      Attaching parts for Parts of Detail Part
                - - - * - - -
```

Attaching Parts always appear in the same indentation as the item it mounts, while the detail parts are indented to the right. Indented items are part of, and included with, the next higher indentation. The separation symbol - - - * - - - indicates the end of attaching parts.

Attaching parts must be purchased separately, unless otherwise specified.

http://manoman.mhill.com

ITEM NAME

In the Parts List, an Item Name is separated from the description by a colon (:). Because of space limitations, an Item Name may sometimes appear as incomplete. For further Item Name identification, the U.S. Federal Cataloging Handbook H6-1 can be utilized where possible.

ABBREVIATIONS

"	INCH
#	NUMBER SIZE
ACTR	ACTUATOR
ADPTR	ADAPTER
ALIGN	ALIGNMENT
AL	ALUMINUM
ASSEM	ASSEMBLED
ASSY	ASSEMBLY
ATTEN	ATTENUATOR
AWG	AMERICAN WIRE GAGE
BD	BOARD
BRKT	BRACKET
BRS	BRASS
BRZ	BRONZE
BSHG	BUSHING
CAB	CABINET
CAP	CAPACITOR
CER	CERAMIC
CHAS	CHASSIS
CKT	CIRCUIT
COMP	COMPOSITION
CONN	CONNECTOR
COV	COVER
CPLG	COUPLING
CRT	CATHODE RAY TUBE
DEG	DEGREE
DWR	DRAWER
ELCTRN	ELECTRON
ELEC	ELECTRICAL
ELCTLT	ELECTROLYTIC
ELEM	ELEMENT
EPL	ELECTRICAL PARTS LIST
EQPT	EQUIPMENT
EXT	EXTERNAL
FIL	FILLISTER HEAD
FLEX	FLEXIBLE
FLH	FLAT HEAD
FLTR	FILTER
FR	FRAME or FRONT
FSTNR	FASTENER
FT	FOOT
FXD	FIXED
GSKT	GASKET
HDL	HANDLE
HEX	HEXAGON
HEX HD	HEXAGONAL HEAD
HEX SOC	HEXAGONAL SOCKET
HLCPS	HELICAL COMPRESSION
HLEXT	HELICAL EXTENSION
HV	HIGH VOLTAGE
IC	INTEGRATED CIRCUIT
ID	INSIDE DIAMETER
IDENT	IDENTIFICATION
IMPLR	IMPELLER
IN	INCH
INCAND	INCANDESCENT
INSUL	INSULATOR
INTL	INTERNAL
LPHLDR	LAMPHOLDER
MACH	MACHINE
MECH	MECHANICAL
MTG	MOUNTING
NIP	NIPPLE
NON WIRE	NOT WIRE WOUND
OBD	ORDER BY DESCRIPTION
OD	OUTSIDE DIAMETER
OVH	OVAL HEAD
PH BRZ	PHOSPHOR BRONZE
PL	PLAIN or PLATE
PLSTC	PLASTIC
PN	PART NUMBER
PNH	PAN HEAD
PWR	POWER
RCPT	RECEPTACLE
RES	RESISTOR
RGD	RIGID
RLF	RELIEF
RTNR	RETAINER
SCH	SOCKET HEAD
SCOPE	OSCILLOSCOPE
SCR	SCREW
SE	SINGLE END
SECT	SECTION
SEMICOND	SEMICONDUCTOR
SHLD	SHIELD
SHLDR	SHOULDERED
SKT	SOCKET
SL	SLIDE
SLFLKG	SELF-LOCKING
SLVG	SLEEVING
SPR	SPRING
SQ	SQUARE
SST	STAINLESS STEEL
STL	STEEL
SW	SWITCH
T	TUBE
TERM	TERMINAL
THD	THREAD
THK	THICK
TNSN	TENSION
TPG	TAPPING
TRH	TRUSS HEAD
V	VOLTAGE
VAR	VARIABLE
W/	WITH
WSHR	WASHER
XFMR	TRANSFORMER
XSTR	TRANSISTOR

CROSS INDEX MFR. CODE NUMBER TO MANUFACTURER

MFR.CODE	MANUFACTURER	ADDRESS	CITY,STATE,ZIP
0000C	GETTIG ENGINEERING AND MANUFACTURING CO.		SPRINGMILL, PA 16875
00779	AMP, INC.	P. O. BOX 3608	HARRISBURG, PA 17105
01009	ALDEN PRODUCTS CO.	117 N. MAIN ST.	BROCKTON, MA 02403
01295	TEXAS INSTRUMENTS, INC., SEMICONDUCTOR GROUP	P. O. BOX 5012	DALLAS, TX 75222
04963	MINNESOTA MINING AND MFG. CO., ADHESIVES COATINGS AND SEALERS DIVISION	3M CENTER	ST. PAUL, MN 55101
05624	BARBER-COLMAN CO.	1300 ROCK ST.	ROCKFORD, IL 61101
05820	WAKEFIELD ENGINEERING, INC.	AUDUBON ROAD	WAKEFIELD, MA 01880
06515	AERO CRAFT AND MISSLE PRODUCTS	16300-D EAST ARROW HWY.	IRWINDALE, CA 91706
06540	AMATOM ELECTRONIC HARDWARE, DIV. OF MITE CORP.	446 BLAKE ST.	NEW HAVEN, CT 06515
06982	MOORE, HOWARD J., CO.	105 E. 16TH ST.	NEW YORK, NY 10003
07707	USM CORP., USM FASTENER DIV.	510 RIVER RD.	SHELTON, CT 06484
	SUPPORT CENTER	2800 S. 20TH ST.	PHILADELPHIA, PA 19101
	ELECTRIC CO.	13376 BEACH AVE.	VENICE, CA 90291
08261	SPECTRA-STRIP CORP.	7100 LAMPSON AVE.	GARDEN GROVE, CA 92642
12327	FREEWAY CORP.	9301 ALLEN DR.	CLEVELAND, OH 44125
12360	ALBANY PRODUCTS CO., DIV. OF PNEUMO DYNAMICS CORP.	351 CONNECTICUT AVE.	SOUTH NORWALK, CT 06856
16428	BELDEN CORP.	P. O. BOX 1101	RICHMOND, IN 47374
22526	BERG ELECTRONICS, INC.	YOUK EXPRESSWAY	NEW CUMBERLAND, PA 17070
22753	U. I. D. ELECTRONICS CORP.	4105 PEMBROKE RD.	HOLLYWOOD, FL 33021
23499	GAVITT WIRE AND CABLE, DIVISION OF RSC INDUSTRIES, INC.	455 N. QUINCE ST.	ESCONDIDO, CA 92025
24655	GENERAL RADIO	300 BAKER AVE.	CONCORD, MA 01742
24931	SPECIALTY CONNECTOR CO., INC.	3560 MADISON AVE.	INDIANAPOLIS, IN 46227
26365	GRIES REPRODUCER CO., DIV. OF COATS AND CLARK INC.	125 BEECHWOOD AVE.	NEW ROCHELLE, NY 10802
28520	HEYMAN MFG. CO.	147 N. MICHIGAN AVE.	KENILWORTH, NJ 07033
28875	IMC MAGNETICS CORP., NEW HAMPSHIRE DIV.	ROUTE 16	ROCHESTER, NH 03867
52792	THORGREN TOOL AND MOLDING CO., INC.	1100 EVANS AVE.	VALPARAISO, IN 46383
56289	SPRAGUE ELECTRIC CO.		NORTH ADAMS, MA 01247
70276	ALLEN MFG. CO.	P. O. DRAWER 570	HARTFORD, CT 06101
70318	ALLMETAL SCREW PRODUCTS CO., INC.	821 STEWART AVE.	GARDEN CITY, NY 11530
71159	BRISTOL SOCKET SCREW, DIV. OF AMERICAN CHAIN AND CABLE CO., INC.	40 BRISTOL ST.	WATERBURY, CT 06720
71279	CAMBRIDGE THERMIONIC CORP.	445 CONCORD AVE.	CAMBRIDGE, MA 02138
71590	CENTRALAB ELECTRONICS, DIV. OF GLOBE-UNION, INC.	5757 N. GREEN BAY AVE.	MILWAUKEE, WI 53201
71785	TRW ELECTRONIC COMPONENTS, CINCH CONNECTOR OPERATIONS	1501 MORSE AVE.	ELK GROVE VILLAGE, IL 60007
72653	G. C. ELECTRONICS CO., A DIVISION OF HYDROMETALS, INC.	400 S. WYMAN ST.	ROCKFORD, IL 61101
73743	FISCHER SPECIAL MFG. CO.	446 MORGAN ST.	CINCINNATI, OH 45206
74445	HOLO-KROME CO.	31 BROOK ST. WEST	HARTFORD, CT 06110
74921	ITEN FIBRE CO., THE	4001 BENEFIT AVE.	ASHTABULA, OH 44004
75915	LITTELFUSE, INC.	800 E. NORTHWEST HWY	DES PLAINES, IL 60016
77250	PHEOLL MANUFACTURING CO., DIVISION OF ALLIED PRODUCTS CORP.	5700 W. ROOSEVELT RD.	CHICAGO, IL 60650
77342	AMF, INC., POTTER AND BRUMFIELD DIV.	1200 E. BROADWAY	PRINCETON, IN 47570
78189	ILLINOIS TOOL WORKS, INC. SHAKEPROOF DIVISION	ST. CHARLES ROAD	ELGIN, IL 60120
79727	C-W INDUSTRIES	550 DAVISVILLE RD.	WARMINSTER, PA 18974
79807	WROUGHT WASHER MFG. CO.	2100 S. O BAY ST.	MILWAUKEE, WI 53207
80009	TEKTRONIX, INC.	P. O. BOX 500	BEAVERTON, OR 97077
80033	PRESTOLE EVERLOCK, INC.	P. O. BOX 278-1345 MIAMI ST.	TOLEDO, OH 43605
82104	STANDARD GRIGSBY CO., DIV. OF SUN CHEMICAL CORP.	920 RATHBONE AVE.	AURORA, IL 60507
83385	CENTRAL SCREW CO.	2530 CRESCENT DR.	BROADVIEW, IL 60153
83501	GAVITT WIRE AND CABLE, DIVISION OF RSC INDUSTRIES, INC.	CENTRAL ST.	BROOKFIELD, MA 01506
86445	PENN FIBRE AND SPECIALTY CO., INC.	2032 E. WESTMORELAND ST.	PHILADELPHIA, PA 19134
95987	WECKESSER CO., INC.	4444 WEST IRVING PARK RD.	CHICAGO, IL 60641

http://manuals.hillcom

Fig. & Index No.	Tektronix Part No.	Serial/Model No. Eff	Dscont	Qty	1 2 3 4 5 Name & Description	Mfr Code	Mfr Part Number
1-1	390-0345-00			2	CABINET SIDE:LEFT AND RIGHT	80009	390-0345-00
	----- -----			-	. EACH CABINET SIDE INCLUDES:		
-2	386-1151-00			2	. PLATE,LATCH LKG:	80009	386-1151-00
-3	386-0227-00			2	. PL,LATCH INDEX:	80009	386-0227-00
-4	214-0604-00			2	. WASH.,SPG TNSN:0.26 ID X 0.47 INCH OD	80009	214-0604-00
-5	214-0603-01			2	. PIN,SECURING:0.27 INCH LONG	80009	214-0603-01
-6	343-0256-00			2	RTNR BLK,SCOPE:	80009	343-0256-00
					(ATTACHING PARTS FOR EACH)		
-7	211-0578-00			2	SCREW,MACHINE:6-32 X 0.438 INCH,PNH STL	83385	OBD
					- - - * - - -		
-8	390-0204-00			1	COVER,SCOPE:	80009	390-0204-00
					(ATTACHING PARTS)		
-9	211-0503-00			4	SCREW,MACHINE:6-32 X 0.188 INCH,PNH STL	83385	OBD
					- - - * - - -		
-10	348-0073-00			2	SPT PIVOT,FLIP:LEFT FRONT AND RIGHT REAR	80009	348-0073-00
					(ATTACHING PARTS FOR EACH)		
-11	211-0532-00			2	SCREW,MACHINE:6-32 X 0.75 INCH,FILH STL	83385	OBD
					- - - * - - -		
	386-3286-00	XB110948		1	PLATE,GND:BAIL	80009	386-3286-00
-12	348-0074-00			2	SPT PIVOT,FLIP:RIGHT FRONT AND LEFT REAR	80009	348-0074-00
					(ATTACHING PARTS FOR EACH)		
-13	211-0532-00			2	SCREW,MACHINE:6-32 X 0.75 INCH,FILH STL	83385	OBD
					- - - * - - -		
-14	377-0119-00			4	INSERT,FOOT:	80009	377-0119-00
-15	426-0514-00			1	FRAME,MASK:PLASTIC	80009	426-0514-00
-16	378-0625-02			1	FILTER,LT,CRT:GRAY	80009	378-0625-02
-17	331-0258-03			1	MASK,CRT SCALE:	80009	331-0258-03
-18	200-0939-01			1	BEZEL,CRT:	80009	200-0939-01
					(ATTACHING PARTS)		
-19	212-0023-00			4	SCREW,MACHINE:8-32 X 0.375 INCH,PNH STL	83385	OBD
					- - - * - - -		
	131-1022-00	B050000		2	CONTACT,ELEC:CRT MASK	80009	131-1022-00
-20	337-1159-00			1	WINDOW,OBS:4.78 X 3.93 X 0.07"PLSTC	80009	337-1159-00
-21	331-0245-00			1	MASK,CRT SCALE:	80009	331-0245-00
-22	333-1691-00			1	PANEL,FRONT:LEFT	80009	333-1691-00
-23	386-1884-03			1	SPRT,ELCTRN TUB:	80009	386-1884-03
					(ATTACHING PARTS)		
-24	212-0040-00			2	SCREW,MACHINE:8-32 X 0.375 100 DEG,FLH STL	83385	OBD
-25	211-0510-00			2	SCREW,MACHINE:6-32 X 0.375 INCH,PNH STL	83385	OBD
					- - - * - - -		
	----- -----			-	. SUPPORT INCLUDES:		
-26	386-1517-00			4	. SUPPORT,CRT:	80009	386-1517-00
-27	204-0380-00			1	BODY,TERMINAL:	80009	204-0380-00
-28	131-0765-00			3	CONTACT,ELEC:	80009	131-0765-00
-29	348-0031-00			1	GROMMET,PLASTIC:0.156 INCH DIA	80009	348-0031-00
-30	----- -----			1	CKT BOARD ASSY:GRATICULE LIGHT(SEE A16 EPL)		
	----- -----			-	. CKT BOARD ASSY INCLUDES:		
-31	378-0614-00			1	. REFLECTOR,LIGHT:	80009	378-0614-00
-32	344-0179-00			2	. CLIP,REFL RTNG:PLASTIC	80009	344-0179-00
-33	211-0062-00			2	. SCREW,MACHINE:2-56 X 0.312 INCH,RDH STL	83385	OBD
-34	366-1519-00			1	KNOB:PULL	80009	366-1519-00
	----- -----			-	. KNOB INCLUDES:		
	213-0725-00			2	. SETSCREW:3-48 X 0.094 INCH,HEX SOC STL	71159	OBD
-35	366-1077-00			3	KNOB:GRAY	80009	366-1077-00
	----- -----			-	. EACH KNOB INCLUDES:		
	213-0153-00			1	. SETSCREW:5-40 X 0.125 INCH,HEX SOC STL	74445	OBD
-36	366-1059-00			1	PUSH BUTTON:GRAY	80009	366-1059-00
-37	366-1215-00			1	KNOB:GRAY	80009	366-1215-00
	----- -----			-	. KNOB INCLUDES:		
	213-0153-00			1	. SETSCREW:5-40 X 0.125 INCH,HEX SOC STL	74445	OBD
-38	366-1519-01			1	KNOB:MAN		80009 366-1519-0
	----- -----			-	. KNOB INCLUDES:		
	213-0725-00			2	. SETSCREW:3-48 X 0.094 INCH,HEX SOC STL	71159	OBD

http://manman.sqml.com

Fig. & Index No.	Tektronix Part No.	Serial/Model No. Eff	Dscont	Qty	1 2 3 4 5 Name & Description	Mfr Code	Mfr Part Number
1-39	366-1391-00			1	KNOB:GRAY	80009	366-1391-00
	----- -----			-	. KNOB INCLUDES:		
	213-0140-00			1	. SETSCREWCH,HEX SOC STL	70276	OBD
-40	366-1480-02			1	PUSH BUTTON:	80009	366-1480-02
-41	366-1402-12			1	PUSH BUTTON:FAST	80009	366-1402-12
-42	366-1402-25			1	PUSH BUTTON:VAR PERSISTANCE	80009	366-1402-25
-43	366-1402-13			1	PUSH BUTTON:BISTABLE	80009	366-1402-13
-44	426-0681-00			15	FR,PUSH BUTTON:GRAY PLASTIC	80009	426-0681-00
-45	358-0378-00	B010100	B149999	3	BUSHING,SLEEVE:PRESS MOUNT	80009	358-0378-00
	358-0378-00	B150000		2	BUSHING,SLEEVE:PRESS MOUNT	80009	358-0378-00
-46	----- -----			3	RES.,VAR:(SEE R1430,R1095,R1488A,B EPL)		
					(ATTACHING PARTS FOR EACH)		
-47	210-0583-00			1	NUT,PLAIN,HEX.:0.25-32 X 0.312 INCH,BRS	73743	2X20224-402
-48	210-0940-00			1	WASHER,FLAT:0.25 ID X 0.375 INCH OD,STL	79807	OBD
					- - - * - - -		
-49	----- -----			1	RES.,VAR:(SEE R1472A,B EPL)		
					(ATTACHING PARTS)		
-50	210-0583-00			1	NUT,PLAIN,HEX.:0.25-32 X 0.312 INCH,BRS	73743	2X20224-402
	210-0940-00			1	WASHER,FLAT:0.25 ID X 0.375 INCH OD,STL	79807	OBD
-51	210-0223-00			1	TERMINAL,LUG:0.25 INCH DIA,SE	78189	2101-14-03-2520N
					- - - * - - -		
-52	333-1795-00	B010100	B149999	1	PANEL,FRONT:	80009	333-1795-00
	333-1795-01	B150000		1	PANEL,FRONT:	80009	333-1795-01
-53	----- -----			1	CKT BOARD ASSY:MODE SWITCH(SEE A17 EPL)		
					(ATTACHING PARTS)		
-54	211-0101-00			2	SCREW,MACHINE:4-40 X 0.25" 100 DEG,FLH STL	83385	OBD
	----- -----			-	. CKT BOARD ASSY INCLUDES:		
-55	131-0608-00			9	. CONTACT,ELEC:0.365 INCH LONG	22526	47357
-56	260-1593-00			1	. SWITCH,PUSH:FAST/VAR PERSIST/BI STABLE	80009	260-1593-00
-57	361-0411-00			5	. SPACER,PUSH SW:0.13 W X 0.375 INCH L,PLSTC	71590	J64285-00
-58	211-0001-00			2	. SCREW,MACHINE:2-56 X 0.25 INCH,PNH STL	83385	OBD
-59	220-0637-00			1	. NUT,BLOCK:1.05 X 0.50 X0.188 INCH OA	80009	220-0637-00
-60	136-0387-01			1	JACK,TIP:BLACK	71279	4352-1-0310
-61	136-0387-00			3	JACK,TIP:GRAY	71279	4352-1-0318
-62	132-0027-00	B010100	B019999	2	ADAPTER,CA TO C:	24655	0874-6540
	351-0437-00	B020000		2	GUIDE,CKT CARD:	80009	351-0437-00
					(ATTACHING PARTS FOR EACH)		
-63	212-0040-00			1	SCREW,MACHINE:8-32 X 0.375 100 DEG,FLH STL	83385	OBD
					- - - * - - -		
-64	386-2119-00			1	SUBPANEL,FRONT:	80009	386-2119-00
					(ATTACHING PARTS)		
-65	211-0538-00			4	SCREW,MACHINE:6-32 X 0.312"100 DEG,FLH STL	83385	OBD
	211-0589-00			2	SCREW,MACHINE:6-32 X 0.312 INCH,PNH BRS	83385	OBD
					- - - * - - -		
-66	348-0282-00			1	STAND,ELEC EQPT:	80009	348-0282-00
-67	348-0278-00			2	SHLD GSKT,ELEC:	80009	348-0278-00
-68	351-0295-00			3	GUIDE,SLIDE:	80009	351-0295-00
					(ATTACHING PARTS FOR EACH)		
-69	213-0088-00	B010100	B100799	1	SCR,TPG,THD CTG:4-24 X 0.25 INCH,PNH STL	83385	OBD
	213-0054-00	B100800		3	SCR,TPG,THD FOR:6-32 X 0.312 INCH,PNH STL	83385	OBD
					- - - * - - -		
-70	384-1058-00			1	EXTENSION SHAFT:8.157 INCH LONG	80009	384-1058-00
-71	351-0179-00			1	GUIDE,CKT CARD:6.75 INCH LONG,PLASTIC	80009	351-0179-00
					(ATTACHING PARTS)		
	672-0572-00			1	CKT BOARD ASSY:PROTECTION AND READOUT		
	211-0101-00			2	SCREW,MACHINE:4-40 X 0.25" 100 DEG,FLH STL	83385	OBD
					- - - * - - -		
-72	210-0202-00			1	TERMINAL,LUG:SE #6	78189	2104-06-00-2520N
					(ATTACHING PARTS)		
-73	211-0559-00			1	SCREW,MACHINE:6-32 X 0.375"100 DEG,FLH STL	83385	OBD
-74	210-0457-00			1	NUT,PLAIN,EXT W:6-32 X 0.312 INCH,STL	83385	OBD
					- - - * - - -		
	644-0056-00			1	POWER SW ASSY:	80009	644-0056-00
					(ATTACHING PARTS)		
-75	211-0559-00			2	SCREW,MACHINE:6-32 X 0.375"100 DEG,FLH STL	83385	OBD
-76	210-0457-00			2	NUT,PLAIN,EXT W:6-32 X 0.312 INCH,STL	83385	OBD
					- - - * - - -		

manualsbook.com

Fig. & Index No.	Tektronix Part No.	Serial/Model No. Eff	Dscont	Qty	1 2 3 4 5 Name & Description	Mfr Code	Mfr Part Number
1-	----- -----			-	. POWER SWITCH ASSY INCLUDES:		
-77	407-1570-00			1	. BRACKET,ANGLE:POWER SWITCH	80009	407-1570-00
-78	211-0008-00			2	. SCREW,MACHINE:4-40 X 0.25 INCH,PNH STL	83385	OBD
-79	200-1731-00			1	. COVER,ELEC SW:1.9 X 1.0 INCH	80009	200-1731-00
-80	211-0034-00			1	. SCREW,MACHINE:2-56 X 0.50 INCH,PNH	83385	OBD
-81	210-0850-00			1	. WASHER,FLAT:0.093 ID X 0.281 INCH OD	12327	OBD
-82	210-0405-00			1	. NUT,PLAIN,HEX.:2-56 X 0.188 INCH,BRS	73743	2X12157-402
-83	260-1709-00			1	. SWITCH,PUSH:POWER	77342	A9T5 762-6-3
-84	131-0799-00			2	CONTACT,ELEC:	80009	131-0799-00
					(ATTACHING PARTS FOR EACH)		
-85	211-0008-00			1	SCREW,MACHINE:4-40 X 0.25 INCH,PNH STL	83385	OBD
-86	210-0586-00			1	NUT,PLAIN,EXT W:4-40 X 0.25 INCH,STL	78189	OBD
					- - - * - - -		
-87	131-0930-00			2	CONTACT,ELEC:PLUG-IN GROUND	80009	131-0930-00
					(ATTACHING PARTS FOR EACH)		
-88	211-0008-00			1	SCREW,MACHINE:4-40 X 0.25 INCH,PNH STL	83385	OBD
-89	210-0586-00			1	NUT,PLAIN,EXT W:4-40 X 0.25 INCH,STL	78189	OBD
					- - - * - - -		
-90	131-1018-00			4	CONTACT,ELEC:PLUG-IN GROUND	80009	131-1018-00
					(ATTACHING PARTS FOR EACH)		
-91	211-0008-00			1	SCREW,MACHINE:4-40 X 0.25 INCH,PNH STL	83385	OBD
-92	210-0586-00			1	NUT,PLAIN,EXT W:4-40 X 0.25 INCH,STL	78189	OBD
					- - - * - - -		
-93	343-0004-00			1	CLAMP,LOOP:0.312 INCH DIAMETER,PLSTC	95987	5-16-6B
					(ATTACHING PARTS)		
-94	211-0538-00			1	SCREW,MACHINE:6-32 X 0.312"100 DEG,FLH STL	83385	OBD
-95	210-0863-00			1	WSHR,LOOP CLAMP:FOR 0.50" WIDE CLAMP,STL	95987	C191
-96	210-0457-00			1	NUT,PLAIN,EXT W:6-32 X 0.312 INCH,STL	83385	OBD
					- - - * - - -		
-97	210-0202-00			1	TERMINAL,LUG:SE #6	78189	2104-06-00-2520N
					(ATTACHING PARTS)		
-98	211-0510-00			1	SCREW,MACHINE:6-32 X 0.312 INCH,PNH STL	83385	OBD
-99	210-0457-00			1	NUT,PLAIN,EXT W:6-32 X 0.312 INCH,STL	83385	OBD
					- - - * - - -		
-100	----- -----			1	CKT BOARD ASSY:LOGIC(SEE A2 EPL)		
	----- -----			-	. CKT BOARD ASSY INCLUDES:		
-101	131-0566-00			1	. LINK,TERM.CONNE:0.086 DIA X 2.375 INCH L	0000C	L-2007-1
-102	136-0235-00			1	. SOCKET,PLUG-IN:6 CONTACT,ROUND	71785	133-96-12-062
-103	136-0252-04	B010100 B010324		24	. CONTACT,ELEC:0.188 INCH LONG	22526	75060
	136-0350-00	B010325		8	. SOCKET,PLUG-IN:3 PIN,LOW PROFILE	80009	136-0350-00
-104	136-0260-02			1	. SOCKET,PLUG-IN:16 CONTACT,LOW CLEARANCE	01295	C931602
-105	136-0263-03	B010100 B131579		33	. CONTACT,ELEC:FOR 0.025 INCH SQUARE PIN	00779	86250-2
	136-0263-04	B131580		33	. CONTACT,ELEC:FOR 0.025 INCH SQUARE PIN	22526	75377-001
-106	136-0269-02			3	. SOCKET,PLUG-IN:14 CONTACT,LOW CLEARANCE	01295	C931402
-107	214-0579-00			4	. TERM.,TEST PT:0.40 INCH LONG	80009	214-0579-00
-108	----- -----			1	CKT BOARD ASSY:MAIN INTERFACE(SEE A1 EPL)		
					(ATTACHING PARTS)		
-109	213-0034-00			9	SCR,TPG,THD CTG:4-40 X 0.188 INCH,PNH STL	83385	OBD
					- - - * - - -		
	----- -----			-	. CKT BOARD ASSY INCLUDES:		
-110	131-0608-00			84	. CONTACT,ELEC:0.365 INCH LONG	22526	47357
-111	131-0592-00			24	. CONTACT,ELEC:0.885 INCH LONG	22526	47353
	131-0591-00			33	. CONTACT,ELEC:0.835 INCH LONG	22526	47352
	131-0589-00			4	. CONTACT,ELEC:0.46 INCH LONG	22526	47350
-112	129-0308-00			3	. POST,ELEC-MECH:HEX.,0.25 X 0.465 INCH LONG	80009	129-0308-00
					(ATTACHING PARTS FOR EACH)		
-113	211-0008-00			1	. SCREW,MACHINE:4-40 X 0.25 INCH,PNH STL	83385	OBD
					- - - * - - -		
-114	129-0308-00			1	. POST,ELEC-MECH:HEX.,0.25 X 0.465 INCH LONG	80009	129-0308-00
					(ATTACHING PARTS)		
	211-0008-00			1	. SCREW,MACHINE:4-40 X 0.25 INCH,PNH STL	83385	OBD
-115	210-0803-00			1	. WASHER,FLAT:0.15 ID X 0.375 INCH OD,STL	12327	OBD
					- - - * - - -		

http://manuals.mcgraw-hill.com

Fig. & Index No.	Tektronix Part No.	Serial/Model No. Eff	Dscont	Qty	1 2 3 4 5 Name & Description	Mfr Code	Mfr Part Number
1-116	131-0804-00			1	. LINK,TERM.CONNE:J-SHAPE	80009	131-0804-00
-117	131-0805-00			2	. LINK,TERM.CONNE:J-SHAPE,0.90X0.82 X 0.312"	80009	131-0805-00
-118	131-1003-00			2	. CONNECTOR BODY,:CKT BD MT,3 PRONG	80009	131-1003-00
-119	136-0252-01			2	. CONTACT,ELEC:0.178 INCH LONG	00779	1-332095-2
	131-0767-08			2	. CONNECTOR,RCPT,:PLUG-IN CKT BD,70 CONTACT	80009	131-0767-08
					(ATTACHING PARTS FOR EACH)		
-120	213-0232-00			2	. SCR,TPG,THD FOR:2-32 X 0.312 INCH,PNH STL	83385	OBD
					- - - * - - -		
	----- -----			-	. . EACH CONNECTOR INCLUDES:		
-121	200-0950-00			2	. . COVER,ELEC CONN:PLASTIC	80009	200-0950-00
-122	131-0726-00			37	. . CONTACT,ELEC:STRAIGHT	80009	131-0726-00
-123	131-0727-00			37	. . CONTACT,ELEC:OFFSET	80009	131-0727-00
-124	204-0365-00			1	. . BODY,CONNECTOR:PLUG-IN CIRCUIT BOARD	80009	204-0365-00
	131-0767-07			1	. CONNECTOR,RCPT,:PLUG-IN CKT BD,70 CONTACT	80009	131-0767-07
					(ATTACHING PARTS)		
-125	213-0232-00			2	. SCR,TPG,THD FOR:2-32 X 0.312 INCH,PNH STL	83385	OBD
	210-0906-00			1	. WASHER,NONMETAL:FIBER,0.125 ID X 0.203"OD	86445	OBD
					- - - * - - -		
	----- -----			-	. . CONNECTOR INCLUDES:		
-126	200-0950-00			2	. . COVER,ELEC CONN:PLASTIC	80009	200-0950-00
-127	131-0726-00			35	. . CONTACT,ELEC:STRAIGHT	80009	131-0726-00
-128	131-0727-00			35	. . CONTACT,ELEC:OFFSET	80009	131-0727-00
-129	204-0365-02			1	. . BODY,CONNECTOR:PLUG-IN CIRCUIT BOARD	80009	204-0365-02
-130	----- -----			1	. CKT BOARD ASSY:(SEE A15 EPL)		
					(ATTACHING PARTS)		
-131	211-0008-00			2	. SCREW,MACHINE:4-40 X 0.25 INCH,PNH STL	83385	OBD
-132	351-0213-00			2	. GUIDE-POST,LOCK:0.285 INCH LONG	80009	351-0213-00
					- - - * - - -		
	----- -----			-	. . CKT BOARD ASSY INCLUDES:		
-133	131-0787-00			8	. . CONTACT,ELEC:0.64 INCH LONG	22526	47359
-134	344-0147-00			2	. CLIP,SPR,TNSN:CIRCUIT BOARD MOUNTING	80009	344-0147-00
					(ATTACHING PARTS FOR EACH)		
-135	210-0406-00			1	. NUT,PLAIN,HEX.:4-40 X 0.188 INCH,BRS	73743	2X12161-402
-136	210-0054-00			1	. WASHER,LOCK:SPLIT,0.118 ID X 0.212"OD STL	83385	OBD
-137	214-1568-00			1	. PIN,GUIDE:	80009	214-1568-00
					- - - * - - -		
-138	386-1558-00			2	. SPACER,CKT BD:PLASTIC	80009	386-1558-00
-139	214-0579-00			1	. TERM.,TEST PT:0.40 INCH LONG	80009	214-0579-00
-140	----- -----			1	CKT BOARD ASSY:VERTICAL INTERFACE(SEE A4 EPL)		
					(ATTACHIG PARTS)		
-141	211-0008-00			2	SCREW,MACHINE:4-40 X 0.25 INCH,PNH STL	83385	OBD
					- - - * - - -		
	----- -----			-	. CKT BOARD ASSY INCLUDES:		
-142	136-0252-04	B010100	B010324	31	. CONTACT,ELEC:0.188 INCH LONG	22526	75060
	136-0252-04	B010325		22	. CONTACT,ELEC:0.188 INCH LONG	22526	75060
	136-0350-00	B010325		3	. SOCKET,PLUG-IN:3 PIN,LOW PROFILE	80009	136-0350-00
-143	136-0263-03			18	. CONTACT,ELEC:FOR 0.025 INCH SQUARE PIN	00779	86250-2
-144	----- -----			1	CKT BOARD ASSY:TRIGGER SELECT(SEE A3 EPL)		
					(ATTACHING PARTS)		
-145	211-0008-00			2	SCREW,MACHINE:4-40 X 0.25 INCH,PNH STL	83385	OBD
					- - - * - - -		
	----- -----			-	. CKT BOARD ASSY INCLUDES:		
-146	131-0589-00			4	. CONTACT,ELEC:0.46 INCH LONG	22526	47350
-147	136-0252-04	B010100	B010324	15	. CONTACT,ELEC:0.188 INCH LONG	22526	75060
	136-0350-00	B010325		5	. SOCKET,PLUG-IN:3 PIN,LOW PROFILE	80009	136-0350-00
-148	136-0260-02			1	. SOCKET,PLUG-IN:16 CONTACT,LOW CLEARANCE	01295	C931602
-149	136-0263-03	B010100	B131579	16	. CONTACT,ELEC:FOR 0.025 INCH SQUARE PIN	00779	86250-2
	136-0263-04	B131580		16	. CONTACT,ELEC:FOR 0.025 INCH SQUARE PIN	22526	75377-001
-150	200-0728-00			2	COV,HANDLE END:	80009	200-0728-00
	343-0006-00	XB070680		1	CLAMP,LOOP:0.50 INCH DIAMETER,PLSTC	95987	1-2-6B
					(ATTACHING PARTS)		
	210-0457-00	XB070680		1	NUT,PLAIN,EXT W:6-32 X 0.312 INCH,STL	83385	OBD
	210-0863-00	XB070680		1	WSHR,LOOP CLAMP:FOR 0.50" WIDE CLAMP,STL	95987	C191
	211-0559-00	XB070680		1	SCREW,MACHINE:6-32 X 0.375"100 DEG,FLH STL	83385	OBD
					- - - * - - -		

http://scopemanuals.com

Fig. & Index No.	Tektronix Part No.	Serial/Model No. Eff	Dscont	Qty	1 2 3 4 5 Name & Description	Mfr Code	Mfr Part Number
1-151	367-0108-00			1	HANDLE,SCOPE:	80009	367-0108-00
					(ATTACHING PARTS)		
-152	212-0597-00			4	SCREW,MACHINE:10-32 X 0.50 INCH,STL	80009	212-0597-00
-153	386-1624-00			2	PL,RET.,HANDLE:	80009	386-1624-00
-154	358-0485-00			4	BUSHING,SLEEVE:0.196ID X 0.287OD X 0.13" L	80009	358-0485-00
-155	386-1283-03			2	PLATE,HDL MTG:PLASTIC	80009	386-1283-03
					- - - * - - -		
	426-1042-00			1	FRAME ASSEMBLY:	80009	426-1042-00
	----- -----			-	. FRAME ASSY INCLUDES:		
-156	426-0741-06			1	. FRAME SECT,CAB.:FRONT	80009	426-0741-06
					(ATTACHING PARTS)		
-157	210-0782-00			8	. RIVET,SOLID:0.125 OD X 0.312"100 DEG FLH	12360	OBD
					- - - * - - -		
-158	426-0741-03			1	. FRAME SECT,CAB.:REAR	80009	426-0741-03
					(ATTACHING PARTS)		
-159	210-0782-00			8	. RIVET,SOLID:0.125 OD X 0.312"100 DEG FLH	12360	OBD
					- - - * - - -		
-160	426-0753-00			1	. FRAME SECT,CAB.:TOP CENTER	80009	426-0753-00
	343-0006-00	XB070600		1	CLAMP,LOOP:0.50 INCH DIAMETER,PLSTC	95987	1-2-6B
					(ATTACHING PARTS)		
	211-0559-00	XB070600		1	SCREW,MACHINE:6-32 X 0.375"100 DEG,FLH STL	83385	OBD
	210-0863-00	XB070600		1	WSHR,LOOP CLAMP:FOR 0.50" WIDE CLAMP,STL	95987	C191
	210-0457-00	XB070600		1	NUT,PLAIN,EXT W:6-32 X 0.312 INCH,STL	83385	OBD
					- - - * - - -		
-161	380-0238-00			1	. HOUSING,PLUG-IN:	80009	380-0238-00
					(ATTACHING PARTS)		
-162	210-0782-00			2	. RIVET,SOLID:0.125 OD X 0.312"100 DEG FLH	12360	OBD
					- - - * - - -		
-163	426-0857-00			1	. FRAME SECT,CAB.:LOWER RIGHT	80009	426-0857-00
-164	426-0858-00			1	. FRAME SECT,CAB.:LOWER LEFT	80009	426-0858-00

http://manoman.spill.com

Fig. & Index No.	Tektronix Part No.	Serial/Model No. Eff	Dscont	Qty	1 2 3 4 5 Name & Description	Mfr Code	Mfr Part Number
2-1	----- -----			1	CKT BOARD ASSY:VERTICAL AMP(SEE A5 EPL)		
					(ATTACHING PARTS)		
-2	211-0008-00			3	SCREW,MACHINE:4-40 X 0.25 INCH,PNH STL	83385	OBD
					- - - * - - -		
	----- -----			-	. CKT BOARD ASSY INCLUDES:		
-3	131-0566-00			4	. LINK,TERM.CONNE:0.086 DIA X 2.375 INCH L	0000C	L-2007-1
-4	131-0608-00			8	. CONTACT,ELEC:0.365 INCH LONG	22526	47357
-5	131-1003-00			3	. CONNECTOR BODY,:CKT BD MT,3 PRONG	80009	131-1003-00
-6	136-0252-04	B010100	B010324	36	. CONTACT,ELEC:0.188 INCH LONG	22526	75060
	136-0350-00	B010325		12	. SOCKET,PLUG-IN:3 PIN,LOW PROFILE	80009	136-0350-00
-7	214-0579-00			2	. TERM.,TEST PT:0.40 INCH LONG	80009	214-0579-00
-8	131-0775-00			2	. CONTACT,ELEC:HEX,0.25 INCH W/6-32 1 END	88245	1601-A
					(ATTACHING PARTS FOR EACH)		
-9	211-0503-00			1	. SCREW,MACHINE:6-32 X 0.188 INCH,PNH STL	83385	OBD
					- - - * - - -		
-10	346-0117-00			1	. STRAP,GROUNDING:	80009	346-0117-00
-11	----- -----			1	CKT BOARD ASSY:HORIZ AMP(SEE A6 EPL)		
					(ATTACHING PARTS)		
-12	211-0008-00			2	SCREW,MACHINE:4-40 X 0.25 INCH,PNH STL	83385	OBD
					- - - * - - -		
	----- -----			-	. CKT BOARD ASSY INCLUDES:		
-13	131-0608-00			23	. CONTACT,ELEC:0.365 INCH LONG	22526	47357
-14	131-1003-00			2	. CONNECTOR BODY,:CKT BD MT,3 PRONG	80009	131-1003-00
-15	136-0252-04	B010100	B010324	24	. CONTACT,ELEC:0.188 INCH LONG	22526	75060
	136-0350-00	B010325		4	. SOCKET,PLUG-IN:3 PIN,LOW PROFILE	80009	136-0350-00
	136-0365-00	B010325		4	. SOCKET,PLUG-IN:3 PIN	80009	136-0365-00
-16	136-0260-01			1	. SOCKET,PLUG-IN:16 CONTACT,RECT SHAPE	71785	133-51-02-075
-17	214-0579-00			1	. TERM.,TEST PT:0.40 INCH LONG	80009	214-0579-00
-18	210-0627-00			2	RIVET,SOLID:0.042 DIA X 0.25 INCH,RDH	80009	210-0627-00
-19	343-0097-00			2	RTNR,TRANSISTOR:HEAT SINK	80009	343-0097-00
					(ATTACHING PARTS FOR EACH)		
-20	210-0599-00			2	NUT,SLEEVE:4-40 X 0.391 INCH LONG	80009	210-0599-00
-21	214-0368-00			1	SPRING,HLCPS:0.24 DIA X 0.438 INCH LONG	80009	214-0368-00
					- - - * - - -		
-22	352-0062-00			2	HOLDER,HEAT SK:1.187 X 1.187 INCHES,PLSTC	80009	352-0062-00
					(ATTACHING PARTS FOR EACH)		
-23	211-0008-00			2	SCREW,MACHINE:4-40 X 0.25 INCH,PNH STL	83385	OBD
-24	211-0012-00			2	SCREW,MACHINE:4-40 X 0.375 INCH,PNH STL	83385	OBD
-25	210-0406-00			4	NUT,PLAIN,HEX.:4-40 X 0.188 INCH,BRS	73743	2X12161-402
					- - - * - - -		
-26	119-0368-00			1	DELAY LINE,ELEC:	80009	119-0368-00
					(ATTACHING PARTS)		
-27	213-0034-00			2	SCR,TPG,THD CTG:4-40 X 0.188 INCH,PNH STL	83385	OBD
					- - - * - - -		
-28	351-0087-00			1	GUIDE,CKT CARD:4.75 INCH LONG,PLASTIC	80009	351-0087-00
-29	348-0031-00			1	GROMMET,PLASTIC:0.156 INCH DIA	80009	348-0031-00
-30	348-0064-00			1	GROMMET,PLASTIC:0.625 INCH DIA	80009	348-0064-00
-31	255-0334-00			FT	PLASTIC CHANNEL:12.75 INCHES LONG	80009	255-0334-00
-32	407-1001-00			1	BRKT,CRT SHIELD:	80009	407-1001-00
					(ATTACHING PARTS)		
	211-0589-00			2	SCREW,MACHINE:6-32 X 0.312 INCH,PNH BRS	83385	OBD
-33	210-0457-00			2	NUT,PLAIN,EXT W:6-32 X 0.312 INCH,STL	83385	OBD
-34	211-0538-00			2	SCREW,MACHINE:6-32 X 0.312"100 DEG,FLH STL	83385	OBD
					- - - * - - -		
-35	----- -----			1	CKT BOARD ASSY:STORAGE(SEE A14 EPL)		
					(ATTACHING PARTS)		
-36	211-0008-00			2	SCREW,MACHINE:4-40 X 0.25 INCH,PNH STL	83385	OBD
-37	129-0236-00			2	POST,ELEC-MECH0.187" HEX	06540	9726-A-0440
-38	210-0586-00			2	NUT,PLAIN,EXT W:4-40 X 0.25 INCH,STL	78189	OBD
					- - - * - - -		
	----- -----			-	. CKT BOARD ASSY INCLUDES:		
-39	131-0608-00	B010100	B149999	98	. CONTACT,ELEC:0.365 INCH LONG	22526	47357
	131-0608-00	B150000		111	. CONTACT,ELEC:0.365 INCH LONG	22526	47357
-40	136-0252-04	B010100	B010324	189	. CONTACT,ELEC:0.188 INCH LONG	22526	75060
	136-0350-00	B010325	B149999X	63	. SOCKET,PLUG-IN:3 PIN,LOW PROFILE	80009	136-0350-00

http://manuals.tektronix.com

Fig. & Index No.	Tektronix Part No.	Serial/Model No. Eff	Dscont	Qty	1 2 3 4 5 Name & Description	Mfr Code	Mfr Part Number
2-41	136-0260-01			3	. SOCKET,PLUG-IN:16 CONTACT,RECT SHAPE	71785	133-51-02-075
-42	136-0269-02			4	. SOCKET,PLUG-IN:14 CONTACT,LOW CLEARANCE	01295	C931402
-43	214-0579-00			8	. TERM.,TEST PT:0.40 INCH LONG	80009	214-0579-00
-44	260-1378-00			1	. SWITCH,PUSH:VERT MODE	71590	2KBC140000-608
-45	366-1402-02			1	. PUSH BUTTON:LEFT	80009	366-1402-02
-46	366-1402-03			1	. PUSH BUTTON:ALT	80009	366-1402-03
-47	366-1402-04			1	. PUSH BUTTON:ADD	80009	366-1402-04
	131-0993-00	XB080750 B149999		1	. LINK,TERM.CONNE:2 WIRE BLACK	00779	530153-2
	131-0993-00	B150000		2	. LINK,TERM.CONNE:2 WIRE BLACK	00779	530153-2
-48	366-1257-31			1	. PUSH BUTTON:CHOP	80009	366-1257-31
-49	366-1402-06			1	. PUSH BUTTON:RIGHT	80009	366-1402-06
-50	260-1379-00			1	. SWITCH,PUSH:TRIG SOURCE	71590	2KBC120000-595
-51	366-1402-02			1	. PUSH BUTTON:LEFT	80009	366-1402-02
-52	366-1402-07			1	. PUSH BUTTON:VERT MODE	80009	366-1402-07
-53	366-1402-06			1	. PUSH BUTTON:RIGHT	80009	366-1402-06
-54	260-1594-00			1	. SWITCH,PUSH:NON STORE/STORE/SAVE	80009	260-1594-00
-55	366-1402-08			1	. PUSH BUTTON:	80009	366-1402-08
-56	366-1257-85			1	. PUSH BUTTON:GRAY--STORE	80009	366-1257-85
-57	366-1402-21			1	. PUSH BUTTON:	80009	366-1402-21
-58	361-0411-00			15	. SPACER,PUSH SW:0.13 W X 0.375 INCH L,PLSTC	71590	J64285-00
-59	384-1099-00			5	. EXTENSION SHAFT:PUSH BUTTON,1.54 INCH LONG	80009	384-1099-00
-60	384-1136-00			6	. EXTENSION SHAFT:0.95 INCH LONG	80009	384-1136-00
-61	352-0019-00			2	. HOLDER:PLASTIC	80009	352-0019-00
					(ATTACHING PARTS FOR EACH)		
-62	213-0088-00			1	. SCR,TPG,THD CTG:4-24 X 0.25 INCH,PNH STL	83385	OBD
					- - - * - - -		
	200-1799-00	XB100000		1	COVER,CKT CARD:CKT BOARD,HV	80009	200-1799-00
					(ATTACHING PARTS)		
	211-0008-00	XB100000		1	SCREW,MACHINE:4-40 X 0.25 INCH,PNH STL	83385	OBD
	210-0801-00	XB100000		1	WASHER,FLAT:0.14 ID X 0.28I OD NP STL	12327	OBD
					- - - * - - -		
					(ATTACHING PARTS)		
-64	211-0147-00			2	SCREW,MACHINE:4-40 X 0.25 INCH,PNH STL	83385	OBD
-65	210-0586-00			2	NUT,PLAIN,EXT W:4-40 X 0.25 INCH,STL	78189	OBD
					- - - * - - -		
-66	386-2416-00			1	SUPPORT,CHASSIS:	80009	386-2416-00
					(ATTACHING PARTS)		
-67	211-0511-00			1	SCREW,MACHINE:6-32 X 0.50 INCH,PNH STL	83385	OBD
-68	210-0993-00			1	WSHR,SHOULDERED:0.143" ID X 0.75" OD,BRS	79807	OBD
	211-0510-00			2	SCREW,MACHINE:6-32 X 0.312 INCH,PNH STL	83385	OBD
	210-0457-00			2	NUT,PLAIN,EXT W:6-32 X 0.312 INCH,STL	83385	OBD
					- - - * - - -		
	343-0213-00	XB090000		1	CLAMP,LOOP:PRESS MT,PLASTIC	80009	343-0213-00
-69	407-1002-00			1	BRACKET,CHASSIS:	80009	407-1002-00
					(ATTACHING PARTS)		
	211-0538-00			4	SCREW,MACHINE:6-32 X 0.312"100 DEG,FLH STL	83385	OBD
	210-0457-00			4	NUT,PLAIN,EXT W:6-32 X 0.312 INCH,STL	83385	OBD
-70	211-0511-00			1	SCREW,MACHINE:6-32 X 0.50 INCH,PNH STL	83385	OBD
-71	210-0993-00			1	WSHR,SHOULDERED:0.143" ID X 0.75" OD,BRS	79807	OBD
					- - - * - - -		
	672-0572-00	XB140000		1	CKT BOARD ASSY:PROTECTION AND READOUT		
-72	----- -----	XB140000		1	. CKT BOARD ASSY:PROTECTION(SEE A18 EPL)		
-73	253-0162-00	XB140000		FT	. . TAPE,PRESS,SEN:	04963	4116
-74	131-0589-00	XB140000		20	. . CONTACT,ELEC:0.46 INCH LONG	22526	47350
-75	210-0702-00	XB140000		2	. EYELET,METALLIC:0.047 OD X 0.125 INCH LONG	07707	S6127
-76	----- -----			1	. CKT BOARD ASSY:READOUT(SEE A13 EPL)		
					(ATTACHING PARTS)		
-77	211-0008-00			1	. SCREW,MACHINE:4-40 X 0.25 INCH,PNH STL	83385	OBD
					- - - * - - -		
	----- -----			-	. . CKT BOARD ASSY INCLUDES:		
-78	131-0608-00			40	. . CONTACT,ELEC:0.365 INCH LONG	22526	47357
-79	131-1003-00			6	. . CONNECTOR BODY,:CKT BD MT,3 PRONG	80009	131-1003-00
-80	136-0235-00			1	. . SOCKET,PLUG-IN:6 CONTACT,ROUND	71785	133-96-12-062
-81	136-0252-01			6	. . CONTACT,ELEC:0.178 INCH LONG	00779	1-332095-2

http://tekmanuals.com

Fig. & Index No.	Tektronix Part No.	Serial/Model No. Eff	Dscont	Qty	1 2 3 4 5 Name & Description	Mfr Code	Mfr Part Number
2-	136-0252-04			45	. . CONTACT,ELEC:0.188 INCH LONG	22526	75060
-82	136-0260-02			14	. . SOCKET,PLUG-IN:16 CONTACT,LOW CLEARANCE	01295	C931602
-83	136-0269-02			3	. . SOCKET,PLUG-IN:14 CONTACT,LOW CLEARANCE	01295	C931402
-84	260-0723-00			1	. . SWITCH,SLIDE:DPDT,0.5A,125VAC	79727	GF126-0028
-85	214-0579-00	B010100	B139999	21	. . TERM.,TEST PT:0.40 INCH LONG	80009	214-0579-00
	214-0579-00	B140000		20	. . TERM,TEST PT:0.40 INCH LONG	80009	214-0579-00
-86	195-0114-08			1	LEAD SET:READOUT	80009	195-0114-08
	621-0474-00			1	POWER SUPPLY:HIGH VOLTAGE	80009	621-0474-00
					(ATTACHING PARTS)		
-87	211-0504-00			4	SCREW,MACHINE:6-32 X 0.25 INCH,PNH STL	83385	OBD
					- - - * - - -		
	----- -----			-	. HIGH VOLTAGE INCLUDES:		
-88	351-0324-00			2	. GUIDE,CKT CARD:	80009	351-0324-00
	342-0256-00	XB020000		1	. INSULATOR,XTSR:	80009	342-0256-00
	342-0257-00	XB020000		1	. INSULATOR,LEAD:	80009	342-0257-00
-89	----- -----			1	. CKT BOARD ASSY:Z AXIS(SEE A8 EPL)		
					(ATTACHING PARTS)		
-90	211-0008-00			3	. SCREW,MACHINE:4-40 X 0.25 INCH,PNH STL	83385	OBD
					- - - * - - -		
	----- -----			-	. . CKT BOARD ASSY INCLUDES:		
-91	131-0608-00			52	. . CONTACT,ELEC:0.365 INCH LONG	22526	47357
-92	131-1003-00			3	. . CONNECTOR BODY,:CKT BD MT,3 PRONG	80009	131-1003-00
-93	136-0252-04	B010100	B010324	42	. . CONTACT,ELEC:0.188 INCH LONG	22526	75060
	136-0365-00	B010325		2	. SOCKET,PLUG-IN:3 PIN ASSY	80009	136-0365-00
	136-0350-00	B010325		12	. SOCKET,PLUG-IN:3 PIN,LOW PROFILE	80009	136-0350-00
-94	----- -----			1	. CKT BOARD ASSY:ANODE(SEE A9 EPL)		
					(ATTACHING PARTS)		
-95	211-0040-00			3	. SCREW,MACHINE:4-40 X 0.25",BDCH PLSTC	26365	OBD
-96	211-0008-00			1	. SCREW,MACHINE:4-40 X 0.25 INCH,PNH STL	83385	OBD
					- - - * - - -		
-97	----- -----			1	. CKT BOARD ASSY:HIGH VOLTAGE(SEE A10 EPL)		
					(ATTACHING PARTS)		
-98	211-0008-00			2	. SCREW,MACHINE:4-40 X 0.25 INCH,PNH STL	83385	OBD
-99	211-0040-00			1	. SCREW,MACHINE:4-40 X 0.25",BDCH PLSTC	26365	OBD
					- - - * - - -		
	----- -----			-	. . CKT BOARD ASSY INCLUDES:		
-100	124-0118-00			1	. . TERMINAL BOARD:1 NOTCH	80009	124-0118-00
					(ATTACHING PARTS)		
-101	361-0007-00			1	. . SPACER,SLEEVE:0.250 INCH DIA,PLASTIC	80009	361-0007-00
					- - - * - - -		
	----- -----			-	. . . TERMINAL STRIP INCLUDES:		
-102	355-0046-00			1	. . . MOUNT,TERM. BD:0.577 INCH H	80009	355-0046-00
-103	124-0119-00			1	. . TERMINAL BOARD:2 NOTCH	80009	124-0119-00
					(ATTACHING PARTS)		
-104	361-0007-00			1	. . SPACER,SLEEVE:0.250 INCH DIA,PLASTIC	80009	361-0007-00
					- - - * - - -		
	----- -----			-	. . . TERMINAL STRIP INCLUDES:		
-105	355-0046-00			1	. . . MOUNT,TERM. BD:0.577 INCH H	80009	355-0046-00
-106	131-0589-00			7	. . CONTACT,ELEC:0.46 INCH LONG	22526	47350
	131-0608-00			19	. . CONTACT,ELEC:0.365 INCH LONG	22526	47357
-107	136-0252-04			9	. . CONTACT,ELEC:0.188 INCH LONG	22526	75060
-108	166-0292-00			2	. . SPACER,SLEEVE:PLSTC,0.155 DIA X 0.065"L	80009	166-0292-00
-109	214-0579-00			1	. . TERM.,TEST PT:0.40 INCH LONG	80009	214-0579-00
-110	----- -----			1	. TRANSISTOR:		
					(ATTACHING PARTS)		
-111	213-0146-00			2	. SCR,TPG,THD FOR:6-20 X 0.313 INCH,PNH STL	83385	OBD
-112	386-0978-00			1	. INSULATOR,PLATE:0.002 INCH MICA,FOR TO-3	80009	386-0978-00
					- - - * - - -		
-113	136-0280-00			1	. SOCKET,PLUG-IN:FOR TO-3	22753	PTS1
					(ATTACHING PARTS)		
-114	211-0101-00			2	. SCREW,MACHINE:4-40 X 0.25" 100 DEG,FLH STL	83385	OBD
-115	210-0586-00			2	. NUT,PLAIN,EXT W:4-40 X 0.25 INCH,STL	78189	OBD
					- - - * - - -		

http://manoman.stph.net

Fig. & Index No.	Tektronix Part No.	Serial/Model No. Eff	Dscont	Qty	1 2 3 4 5 Name & Description	Mfr Code	Mfr Part Number
2-116	348-0063-00			1	. GROMMET,PLASTIC:0.50 INCH DIA	80009	348-0063-00
-117	343-0088-00			1	. CLAMP,LOOP:0.062 INCH DIA	80009	343-0088-00
-118	348-0085-00	B010100	B119999	FT	. PLASTIC CHANNEL:12.75 INCHES LONG	80009	255-0334-00
	358-0166-00	B120000		1	. GROMMET,PLASTIC:U-SHAPED	80009	358-0166-00
-119	129-0251-01			1	. POST,NONMETALLI:4-40X0.250D X 1.125"LG	80009	129-0251-01
					(ATTACHING PARTS)		
-120	129-0236-00			1	. POST,METALLIC:4-40 X 0.188 X 0.375" LG	06540	9726-A-D440
					- - - * - - -		
	211-0008-00			1	. SCREW,MACHINE:4-40 X 0.25 INCH,PNH,STL	83385	OBD
	210-0004-00	XB110998		2	. WASHER,LOCK:INTL,0.12 ID X 0.26" OD,STL	78189	1204-00-00-0541C
-121	129-0251-00			3	. POST,NONMETALLI:4-40 X 0.25 OD X 1.125" LONG	80009	129-0251-00
					(ATTACHING PARTS FOR EACH)		
-122	211-0040-00			1	. SCREW,MACHINE:4-40 X 0.25",BDCH PLSTC	26365	OBD
					- - - * - - -		
-123	129-0143-00			3	. INSULATOR,STDF:0.312 OD X 0.406" L,NYLON	80009	129-0143-00
					(ATTACHING PARTS FOR EACH)		
-124	211-0008-00			1	. SCREW,MACHINE:4-40 X 0.25 INCH,PNH STL	83385	OBD
					- - - * - - -		
-125	131-0773-00			1	. CONN,RCPT,ELEC:	01009	8111
-126	337-1538-01			1	. SHIELD,ELEC:HIGH VOLTAGE	80009	337-1538-01
-127	441-1192-00			1	CHASSIS,SCOPE:MAIN	80009	441-1192-00
					(ATTACHING PARTS)		
-128	211-0590-00			2	SCREW,MACHINE:6-32 X 0.25 INCH,PNH STL	83385	OBD
-129	210-0457-00			2	NUT,PLAIN,EXT W:6-32 X 0.312 INCH,STL	83385	OBD
					- - - * - - -		
	----- -----			-	. CHASSIS INCLUDES:		
-130	343-0347-00			1	. RING,CLP,CRT RE:	80009	343-0347-00
					(ATTACHING PARTS)		
-131	211-0507-00			4	. SCREW,MACHINE:6-32 X 0.312 INCH,PNH STL	83385	OBD
					- - - * - - -		
-132	354-0205-01			1	. RTNR,ELECTRON T:	80009	354-0205-01
					(ATTACHING PARTS)		
-133	211-0170-00			2	. SCREW,MACHINE:4-40 X 2.75 INCH,PNH STL	83385	OBD
-134	214-1333-00			2	. SPRING,HLCPS:0.213 OD X 0.375 INCH LONG	80009	214-1333-00
					- - - * - - -		
	210-0803-00	XB090000		1	WASHER,FLAT:0.15 ID X 0.375 INCH OD,STL	12327	OBD
	343-0004-00	XB090000		1	CLAMP,LOOP:0.312 INCH DIAMETER,PLSTC	95987	5-16-6B
-135	----- -----			1	COIL:		
					(ATTACHING PARTS)		
-136	213-0138-00			2	SCR,TPG,THD FOR:4-40 X 0.188 INCH,PNH STL	83385	OBD
-137	343-0217-00			1	CLAMP,COIL:	80009	343-0217-00
					- - - * - - -		
	342-0182-00			1	INSULATOR:CRT SHIELD	80009	342-0182-00
-138	342-0184-00			1	INSULATOR:CRT FRONT	80009	342-0184-00
-139	337-1531-00			1	SHIELD,CRT:	80009	337-1531-00
-140	337-1757-00			1	SHIELD,ELEC:REGULATOR	80009	337-1757-00
					(ATTACHING PARTS)		
-141	211-0097-00			4	SCREW,MACHINE:4-40 X 0.312 INCH,PNH STL	83385	OBD
					- - - * - - -		
-142	441-1129-00[1]			1	CHASSIS,SCOPE:	80009	441-1129-00
					(ATTACHING PARTS)		
	211-0559-00			4	SCREW,MACHINE:6-32 X 0.375"100 DEG,FLH STL	83385	OBD
					- - - * - - -		
-143	147-0008-00[1]			1	MOTOR AC:BARBER COLMAN	05624	AYAA13080
					(ATTACHING PARTS)		
-144	212-0557-00[1]			2	SCREW,MACHINE:10-32 X 0.50 INCH,RND H STL	83385	OBD
-145	337-1756-00[1]			1	SHIELD,ELEC:FAN	80009	337-1756-00
-146	210-1112-00[1]			2	WASHER,FLAT:0.228ID X 0.375 INCH OD,PLSTC	80009	210-1112-00
					- - - * - - -		
-147	369-0037-00[1]			1	FAN BLADE:PLASTIC	52792	3500CW125N
-148	378-0811-00[1]			1	BAFFLE,AIR:	80009	378-0811-00
					(ATTACHING PARTS)		
-149	211-0008-00			4	SCREW,MACHINE:4-40 X 0.25 INCH,PNH STL	83385	OBD
					- - - * - - -		

[1]Parts not included in Option 5.

http://manuals.tek.com

Fig. & Index No.	Tektronix Part No.	Serial/Model No. Eff	Dscont	Qty	1 2 3 4 5 Name & Description	Mfr Code	Mfr Part Number
2-150	----- -----			6	TRANSISTOR:		
					(ATTACHING PARTS FOR EACH)		
-151	211-0511-00	B010100	B111234	2	SCREW,MACHINE:6-32 X 0.50 INCH,PNH STL	83385	OBD
	211-0578-00	B111235		2	SCREW,MACHINE:6-32 X 0.438 INCH,PNH,STL	83385	OBD
-152	386-0978-00			1	INSULATOR,PLATE:0.002 INCH MICA,FOR TO-3	80009	386-0978-00
					- - - * - - -		
	343-0004-00	XB090000		1	CLAMP,LOOP:0.312 INCH DIAMETER,PLSTC	95987	5-16-6B
					(ATTACHING PARTS)		
	210-0457-00	XB090000		1	NUT,PLAIN,EXT W:6-32 X 0.312 INCH,STL	83385	OBD
	210-0803-00	XB090000		1	WASHER,FLAT:0.15 ID X 0.375 INCH OD,STL	12327	OBD
-153	----- -----			1	CKT BOARD ASSY:REGULATOR(SEE A12 EPL)		
	----- -----			-	. CKT BOARD ASSY INCLUDES:		
-154	131-0608-00			49	. CONTACT,ELEC:0.365 INCH LONG	22526	47357
-155	136-0183-00			3	. SOCKET,PLUG-IN:3 PIN	80009	136-0183-00
-156	136-0235-00			6	. SOCKET,PLUG-IN:6 CONTACT,ROUND	71785	133-96-12-062
-157	131-0847-00			12	. TERMINAL STUD:6-32 X 0.435 INCH LONG	80009	131-0847-00
-158	136-0361-00			6	. SOCKET,PLUG-IN:	80009	136-0361-00
-159	136-0384-00			12	. CONTACT,ELEC:FOR 0.04 DIAMETER PIN	00779	52120
-160	136-0252-04	B010100	B010324	36	. CONTACT,ELEC:0.188 INCH LONG	22526	75060
	136-0252-04	B010325		9	CONTACT,ELEC:0.188 INCH LONG	22526	75060
	136-0350-00	B010325		9	SOCKET,PLUG-IN:3 PIN,LOW PROFILE	80009	136-0350-00
-161	136-0269-02			1	. SOCKET,PLUG-IN:14 CONTACT,LOW CLEARANCE	01295	C931402
-162	214-0579-00			1	. TERM.,TEST PT:0.40 INCH LONG	80009	214-0579-00
-163	214-1291-00			3	. HEAT SINK,ELEC:XSTR,0.72 OD X 0.375"H	05820	207-AB
-164	344-0154-00			2	. CLIP,ELECTRICAL:FOR 0.25 INCH DIA FUSE	80009	344-0154-00
	614-0104-01			1	SUBPANEL ASSY:REAR	80009	614-0104-01
					(ATTACHING PARTS)		
-165	211-0529-00			4	SCREW,MACHINE:6-32 X 1.25 INCHES,PNH STL	83385	OBD
-166	348-0191-00			4	LEG,ELEC EQUIP.:PLASTIC	80009	348-0191-00
-167	211-0008-00			1	SCREW,MACHINE:4-40 X 0.25 INCH,PNH STL	83385	OBD
					- - - * - - -		
	----- -----			-	. SUBPANEL ASSY INCLUDES:		
-168	161-0033-09			1	. CABLE ASSY,PWR:3 WIRE,92 INCH LONG	16428	KH8035
-169	358-0323-00			1	. BSHG,STRAIN RLF:90 DEG,0.515 DIA HOLE	28520	SR15-1
-170	200-1388-00	B010100	B111234	1	. COVER,FUSE:	80009	200-1388-00
	200-1388-01	B111235		1	COVER,FUSE:	80009	200-1388-01
-171	352-0076-00			1	. FUSEHOLDER:W/HARDWARE	75915	342012
-172	131-0955-00			6	. CONNECTOR,RCPT,:BNC,FEMALE	24931	28JR200-1
					(ATTACHING PARTS FOR EACH)		
-173	210-0255-00			1	. TERMINAL,LUG:0.391" ID INT TOOTH	80009	210-0255-00
					- - - * - - -		
-174	210-0204-00			1	. TERMINAL,LUG:0.146 INCH DIA DE,45 DEG BEND	78189	2157-06-01-2520N
	210-0202-00	XB111080		1	. TERMINAL,LUG:SE #6	78189	2104-06-00-2520N
					(ATTACHING PARTS)		
-175	211-0504-00	B010100	B111079	1	. SCREW,MACHINE:6-32 X 0.25 INCH,PNH STL	83385	OBD
	211-0507-00	B111080		1	. SCREW,MACHINE:6-32 X 0.312 INCH ,BRS	83385	OBD
-176	210-0407-00	B010100	B111079	1	. NUT,PLAIN,HEX.:6-32 X 0.25 INCH,BRS	73743	3038-0228-402
	210-0407-00	B111080		2	. NUT,PLAIN,HEX:6-32 X 0.312 INCH,BRS	73743	3038-0228-402
					- - - * - - -		
-177	----- -----			1	. CKT BOARD ASSY:OUTPUT SIGNALS(SEE A7 EPL)		
					(ATTACHING PARTS)		
-178	211-0008-00			2	. SCREW,MACHINE:4-40 X 0.25 INCH,PNH STL	83385	OBD
					- - - * - - -		
	----- -----			-	. . CKT BOARD ASSY INCLUDES:		
-179	131-0608-00			10	. . CONTACT,ELEC:0.365 INCH LONG	22526	47357
-180	131-1003-00			2	. . CONNECTOR BODY,:CKT BD MT,3 PRONG	80009	131-1003-00
-181	136-0252-01			2	. . CONTACT,ELEC:0.178 INCH LONG	00779	1-332095-2
	136-0252-04	B010100	B010324	27	. . CONTACT,ELEC:0.188 INCH LONG	22526	75060
	136-0350-00	B010325		9	. . SOCKET,PLUG-IN:3 PIN,LOW PROFILE	80009	136-0350-00
-182	214-0579-00			1	. . TERM.,TEST PT:0.40 INCH LONG	80009	214-0579-00
-183	260-0984-00			1	. . SWITCH,SLIDE:DP3POSN,0.5A,125VAC-DC	79727	G-128SPC/7140
-184	386-2199-00			1	. PANEL,REAR:POWER	80009	386-2199-00
-185	175-1091-00			1	CABLE,SP,ELEC:	80009	175-1091-00

http://bbsman.sailkorea.com

Fig. & Index No.	Tektronix Part No.	Serial/Model No. Eff	Dscont	Qty	1 2 3 4 5 Name & Description	Mfr Code	Mfr Part Number
2-	343-0003-00	XB090000		1	CLAMP,LOOP:0.25 INCH DIA	95987	1-4 6R
					(ATTACHING PARTS)		
	211-0012-00	XB090000		1	SCREW,MACHINE:4-40 X 0.375 INCH,PNH STL	83385	OBD
	210-0803-00	XB090000		1	WASHER,FLAT:0.15 ID X 0.375 INCH OD,STL	12327	OBD
	210-0586-00	XB090000		1	NUT,PLAIN,EXT W:4-40 X 0.25 INCH,STL	78189	OBD
					- - - * - - -		
	614-0077-05			1	POWER SUPPLY:LOW VOLTAGE	80009	614-0077-05
					(ATTACHING PARTS)		
	212-0040-00			6	SCREW,MACHINE:8-32 X 0.375 100 DEG,FLH STL	83385	OBD
					- - - * - - -		
	----- -----			-	. POWER SUPPLY INCLUDES:		
-186	----- -----			1	. CKT BOARD ASSY:RECTIFIER(SEE A11 EPL)		
					(ATTACHING PARTS)		
-187	211-0511-00			2	. SCREW,MACHINE:6-32 X 0.50 INCH,PNH STL	83385	OBD
-188	210-0863-00			1	. WSHR,LOOP CLAMP:FOR 0.50" WIDE CLAMP,STL	95987	C191
-189	343-0004-00			1	. CLAMP,LOOP:0.312 INCH DIAMETER,PLSTC	95987	5-16-6B
-190	211-0507-00			2	. SCREW,MACHINE:6-32 X 0.312 INCH,PNH STL	83385	OBD
-191	210-0202-00			1	. TERMINAL,LUG:SE #6	78189	2104-06-00-2520N
					- - - * - - -		
	----- -----			-	. . CKT BOARD ASSY INCLUDES:		
-192	131-0608-00			31	. . CONTACT,ELEC:0.365 INCH LONG	22526	47357
-193	136-0252-04	B010100	B010324	6	. . CONTACT,ELEC:0.188 INCH LONG	22526	75060
-194	214-1731-01			1	. . HEATSINK,ELEC:TRANSISTOR,W/PEM NUT	80009	214-1731-01
					(ATTACHING PARTS)		
-195	211-0012-00			1	. . SCREW,MACHINE:4-40 X 0.375 INCH,PNH STL	83385	OBD
-196	210-0935-00			1	. . WASHER,NONMETAL:FIBER,0.14 IDX 0.375"OD	74921	OBD
-197	210-0586-00			1	. . NUT,PLAIN,EXT W:4-40 X 0.25 INCH,STL	78189	OBD
					- - - * - - -		
-198	214-1292-00			2	. . HEAT SINK,ELEC:TRANSISTOR	05820	205-AB
-199	344-0154-00			4	. . CLIP,ELECTRICAL:FOR 0.25 INCH DIA FUSE	80009	344-0154-00
-200	----- -----			1	. SW,THERMOSTATIC:(SEE S1000 EPL)		
					(ATTACHING PARTS)		
-201	211-0008-00			2	. SCREW,MACHINE:4-40 X 0.25 INCH,PNH STL	83385	OBD
-202	210-0586-00			2	. NUT,PLAIN,EXT W:4-40 X 0.25 INCH,STL	78189	OBD
					- - - * - - -		
-203	----- -----			1	. TRANSFORMER:(SEE T801 EPL)		
					(ATTACHING PARTS)		
-204	212-0522-00			2	. SCREW,MACHINE:10-32 X 2.50",HEX HD STL	83385	OBD
-205	210-0812-00			2	. WASHER,NONMETAL:#10,FIBER	06982	OBD
-206	166-0457-00			2	. INSUL SLVG,ELEC:0.19 ID X 1.875"LONG MYLAR	80009	166-0457-00
-207	212-0023-00			2	. SCREW,MACHINE:8-32 X 0.375 INCH,PNH STL	83385	OBD
-208	210-0804-00			2	. WASHER,FLAT:0.17 ID X 0.375 INCH OD,STL	12327	OBD
-209	407-0921-00			1	. BRKT,XFMR MTG:	80009	407-0921-00
					- - - * - - -		
-210	441-0993-01			1	. CHASSIS,SCOPE:POWER SUPPLY,LOW VOLTAGE	80009	441-0993-01
	136-0589-00			1	CRT SOCKET ASSY:	80009	136-0589-00
-211	136-0304-02			1	. SOCKET,PLUG-IN:CRT	80009	136-0304-02
-212	200-0917-01			1	. COV,ELECTRON TU:2.052 OD X 0.291" THK,PLSTC	80009	200-0917-01
-213	367-0117-00			1	. PULL,SOC,PL-IN:	80009	367-0117-00
-214	343-0254-00			1	. CLAMP,CRT SKT:	80009	343-0254-00
-215	348-0012-00			1	. GROMMET,RUBBER:	72653	1043-1M
-216	131-0707-00			7	. CONTACT,ELEC:0.48"L,22-26 AWG WIRE	22526	47439
-217	131-0621-00			6	. CONTACT,ELEC:0.577"L,22-26 AWG WIRE	22526	46231
	352-0161-05			1	. CONN BODY,PL,EL:3 WIRE GREEN	80009	352-0161-05
	352-0162-09			1	. CONN BODY,PL,EL:4 WIRE WHITE	80009	352-0162-09
	352-0205-00			1	. CONN BODY,PL,EL:9 WIRE BLACK	80009	352-0205-00
-218	179-1825-00			1	WIRING HARNESS:VERTICAL SIGNAL	80009	179-1825-00
	131-0707-00			2	. CONTACT,ELEC:0.48"L,22-26 AWG WIRE	22526	47439
	131-0708-00			2	. CONTACT,ELEC:0.48"L,28-32 AWG WIRE	22526	47437
-219	210-0774-00			2	. EYELET,METALLIC:0.152 OD X 0.245 INCH L,BRS	80009	210-0774-00

http://manuals.tmcgill.com

Fig. & Index No.	Tektronix Part No.	Serial/Model No. Eff	Dscont	Qty	1 2 3 4 5 Name & Description	Mfr Code	Mfr Part Number
2-220	210-0775-00			2	. EYELET,METALLIC:0.126 OD X 0.23 INCH L,BRS	80009	210-0775-00
	352-0162-09			1	. CONN BODY,PL,EL:4 WIRE WHITE	80009	352-0162-09
	179-1826-00			1	WIRING HARNESS:SWEEP GATE	80009	179-1826-00
	131-0707-00			8	. CONTACT,ELEC:0.48"L,22-26 AWG WIRE	22526	47439
	131-0708-00			8	. CONTACT,ELEC:0.48"L,28-32 AWG WIRE	22526	47437
	352-0166-03			1	. CONN BODY,PL,EL:8 WIRE ORANGE	80009	352-0166-03
	179-1828-00			1	WIRING HARNESS:COAX	80009	179-1828-00
	131-0707-00			2	. CONTACT,ELEC:0.48"L,22-26 AWG WIRE	22526	47439
	131-0708-00			2	. CONTACT,ELEC:0.48"L,28-32 AWG WIRE	22526	47437
	352-0169-01			1	. CONN BODY,PL,EL:2 WIRE BROWN	80009	352-0169-01
	352-0169-05			1	. CONN BODY,PL,EL:2 WIRE,GREEN	80009	352-0169-05
	352-0169-09			1	. CONN BODY,PL,EL:2 WIRE WHITE	80009	352-0169-09
	131-0621-00			7	CONTACT,ELEC:0.577"L,22-26 AWG WIRE	22526	46231
	131-0707-00			286	CONTACT,ELEC:0.48"L,22-26 AWG WIRE	22526	47439
	131-0708-00			27	CONTACT,ELEC:0.48"L,28-32 AWG WIRE	22526	47437
-221	131-0861-00			5	CONTACT,ELEC:QUICK DISCONNECT	00779	42617-2
-222	131-1538-00			4	CONTACT,ELEC:CRIMP-ON,22-26 AWG WIRE	22526	75369-002
	210-0774-00			11	EYELET,METALLIC:0.152 OD X 0.245 INCH L,BRS	80009	210-0774-00
	210-0775-00			11	EYELET,METALLIC:0.126 OD X 0.23 INCH L,BRS	80009	210-0775-00
-223	200-1075-00			5	COVER,ELEC CONN:PLASTIC	00779	1-480435-0
-224	352-0171-00			2	CONN BODY,PL,EL:1 WIRE BLACK	80009	352-0171-00
	352-0171-03			2	CONN BODY,PL,EL:1 WIRE ORANGE	80009	352-0171-03
-225	352-0169-00			2	CONN BODY,PL,EL:2 WIRE BLACK	80009	352-0169-00
	352-0169-01			2	CONN BODY,PL,EL:2 WIRE BROWN	80009	352-0169-01
	352-0169-02			1	CONN BODY,PL,EL:2 WIRE RED	80009	352-0169-00
	352-0169-04			1	CONN BODY,PL,EL:2 WIRE YELLOW	80009	352-0169-04
	352-0169-08			4	CONN BODY,PL,EL:2 WIRE GRAY	80009	352-0169-08
	352-0169-09			2	CONN BODY,PL,EL:2 WIRE WHITE	80009	352-0169-09
-226	352-0161-00			4	CONN BODY,PL,EL:3 WIRE BLACK	80009	352-0161-00
	352-0161-03			1	CONN BODY,PL,EL:3 WIRE ORANGE	80009	352-0161-03
	352-0161-05			1	CONN BODY,PL,EL:3 WIRE GREEN	80009	352-0161-05
	352-0161-06			2	CONN BODY,PL,EL:3 WIRE BLUE	80009	352-0161-05
	352-0161-08			1	CONN BODY,PL,EL:3 WIRE GRAY	80009	352-0161-08
	352-0161-09			2	CONN BODY,PL,EL:3 WIRE WHITE	80009	352-0261-09
-227	352-0162-01			4	CONN BODY,PL,EL:4 WIRE BROWN	80009	352-0162-01
-228	352-0163-00			1	CONN BODY,PL,EL:5 WIRE BLACK	80009	352-0163-00
	352-0163-01			2	CONN BODY,PL,EL:5 WIRE BROWN	80009	352-0163-01
	352-0163-03			1	CONN BODY,PL,EL:5 WIRE ORANGE	80009	352-0163-03
	352-0163-06			2	CONN BODY,PL,EL:5 WIRE BLUE	80009	352-0163-06
	352-0163-08			11	CONN BODY,PL,EL:5 WIRE GRAY	80009	352-0163-08
-229	352-0164-01			2	CONN BODY,PL,EL:6 WIRE BROWN	80009	352-0164-01
	352-0164-09			1	CONN BODY:PL,EL:6 WIRE WHITE	80009	352-0164-09
-230	352-0166-00			2	CONN BODY,PL,EL:8 WIRE BLACK	80009	352-0166-00
	352-0166-01			2	CONN BODY,PL,EL:8 WIRE BROWN	80009	352-0166-01
	352-0166-03			4	CONN BODY,PL,EL:8 WIRE ORANGE	80009	352-0166-03
-231	352-0167-00			2	CONN BODY,PL,EL:9 WIRE BLACK	80009	352-0167-00
	352-0167-05			2	CONN BODY,PL,EL:9 WIRE GREEN	80009	352-0167-05
-232	352-0168-02			2	CONN BODY,PL,EL:10 WIRE RED	80009	352-0168-02
	352-0168-05			2	CONN BODY,PL,EL:10 WIRE GREEN	80009	352-0168-05
	352-0168-07			2	CONN BODY,PL,EL:10 WIRE VIOLET	80009	352-0168-07
-233	352-0205-00			1	CONN BODY,PL,EL:9 WIRE BLACK	80009	352-0205-00
-234	175-0825-00			FT	WIRE,ELECTRICAL:2 WIRE RIBBON	23499	TEK-175-0825-00
-235	175-0826-00			FT	WIRE,ELECTRICAL:3 WIRE RIBBON	08261	TEK-175-0826-00
-236	175-0827-00			FT	WIRE,ELECTRICAL:4 WIRE RIBBON	08261	TEK-175-0827-00
-237	175-0828-00			FT	WIRE,ELECTRICAL:5 WIRE RIBBON	23499	TEK-175-0828-00
-238	175-0829-00			FT	WIRE,ELECTRICAL:6 WIRE RIBBON	83501	TEK-175-0829-00
-239	175-0831-00			FT	WIRE,ELECTRICAL:8 WIRE RIBBON	08261	TEK-175-0831-00
-240	175-0832-00			FT	WIRE,ELECTRICAL:9 WIRE RIBBON	23499	TEK-175-0832-00
-241	175-0833-00			FT	WIRE,ELECTRICAL:10 WIRE RIBBON	23499	TEK-175-0833-00
	175-0855-00			FT	WIRE,ELECTRICAL:10 WIRE RIBBON	23499	TEK-175-0855-00
	175-0857-00			FT	WIRE ELECTRICAL:TIBBON TYPE,8 WIRES	23499	TEK-175-0857-00
	210-0774-00			2	. EYELET,METALLIC:0.152 OD X 0.245 INCH L,BRS	80009	210-0774-00
	210-0775-00			2	. EYELET,METALLIC:0.126 OD X 0.23 INCH L,BRS	80009	210-0775-00
	352-0162-09			1	. CONN BODY,PL,EL:2 WIRE WHITE	80009	352-0162-09

manualsarchive.com

Fig. & Index No.	Tektronix Part No.	Serial/Model No. Eff	Dscont	Qty	1 2 3 4 5	Name & Description	Mfr Code	Mfr Part Number
2-						OPTION 5		
	119-0396-00			1		FAN,TUBEAXIAL:40 CFM,115V,AC	80009	119-0396-00
						(ATTACHING PARTS)		
	211-0530-00			4		SCREW,MACHINE:6-32 X 1.75 INCH,PNH STL	83385	OBD
						- - - * - - -		
	285-0562-00			1		CAP.,FXD,PLSTC:0.47UF,20%,400V	56289	410P47404
						(ATTACHING PARTS)		
	211-0504-00			3		SCREW,MACHINE:6-32 X 0.25 INCH,PNH STL	83385	OBD
	131-0761-00			3		TERMINAL STUD:SCREW MTG,FLAT TAB	71279	4897-1-0516
						- - - * - - -		
	344-0116-00			1		RTNR,CAP:0.625 MTG	80033	E50005-041
	378-0050-00			1		BAFFLE,AIR:	80009	378-0050-00
						(ATTACHING PARTS)		
	211-0507-00			4		SCREW,MACHINE:6-32 X 0.312 INCH,PNH STL	83385	OBD
						- - - * - - -		
	441-1201-00			1		CHAS,ELEC EQPT:	80009	441-1201-00

http://manoman.sqhill.com

Fig. & Index No.	Tektronix Part No.	Serial/Model No. Eff	Dscont	Qty	1 2 3 4 5 Name & Description	Mfr Code	Mfr Part Number
3-1	390-0229-00			1	CABINET TOP:OSCILLOSCOPE	80009	390-0229-00
					(ATTACHING PARTS)		
-2	211-0008-00			6	SCREW,MACHINE:4-40 X 0.25 INCH,PNH STL	83385	OBD
	211-0101-00			2	SCREW,MACHINE:4-40 X 0.25" 100 DEG,FLH STL	83385	OBD
					- - - * - - -		
-3	426-0514-00			1	FRAME,MASK:PLASTIC	80009	426-0514-00
-4	378-0625-02			1	FILTER,LT,CRT:	80009	378-0625-02
-5	331-0258-03			1	MASK,CRT SCALE:	80009	331-0258-03
-6	200-0939-01			1	BEZEL,CRT:	80009	200-0939-01
					(ATTACHING PARTS)		
-7	212-0023-00			4	SCREW,MACHINE:8-32 X 0.375 INCH,PNH STL	83385	OBD
					- - - * - - -		
	131-1022-00	XB050000		2	CONTACT,ELEC:CRT MASK	80009	131-1022-00
-8	337-1159-00			1	WINDOW,OBS:4.78 X 3.93 X 0.07"PLSTC	80009	337-1159-00
-9	331-0245-00			1	MASK,CRT SCALE:	80009	331-0245-00
-10	333-1691-00			1	PANEL,FRONT:LEFT	80009	333-1691-00
-11	386-1884-03			1	SPRT,ELCTRN TUB:	80009	386-1884-03
					(ATTACHING PARTS)		
-12	212-0040-00			2	SCREW,MACHINE:8-32 X 0.375 100 DEG,FLH STL	83385	OBD
	211-0510-00			2	SCREW,MACHINE:6-32 X 0.375 INCH,PNH STL	83385	OBD
					- - - * - - -		
	----- -----			-	. SUPPORT INCLUDES:		
-13	386-1517-00			4	. SUPPORT,CRT:	80009	386-1517-00
-14	204-0380-00			1	BODY,TERMINAL:	80009	204-0380-00
-15	131-0765-00			3	CONTACT,ELEC:	80009	131-0765-00
-16	348-0031-00			1	GROMMET,PLASTIC:0.156 INCH DIA	80009	348-0031-00
-17	----- -----			1	CKT BOARD ASSY:GRATICULE LIGHT(SEE A16 EPL)		
	----- -----			-	. CKT BOARD ASSY INCLUDES:		
-18	378-0614-00			1	. REFLECTOR,LIGHT:	80009	378-0614-00
-19	344-0179-00			2	. CLIP,REFL RTNG:PLASTIC	80009	344-0179-00
-20	211-0062-00			2	. SCREW,MACHINE:2-56 X 0.312 INCH,RDH STL	83385	OBD
-21	366-1519-00			1	KNOB:PULL	80009	366-1519-00
	----- -----			-	. KNOB INCLUDES:		
	213-0725-00			2	. SETSCREW:3-048 X 0.094 INCH,HEX SOC STL	71159	OBD
-22	366-1077-00			3	KNOB:GRAY	80009	366-1077-00
	----- -----			-	EACH KNOB INCLUDES:		
	213-0153-00			1	. SETSCREW:5-40 X 0.125 INCH,HEX SOC STL	74445	OBD
-23	366-1059-00			1	PUSH BUTTON:GRAY	80009	366-1059-00
-24	366-1215-00			1	KNOB:GRAY	80009	366-1215-00
	----- -----			-	. KNOB INCLUDES:		
	213-0153-00			1	. SETSCREW:5-40 X 0.125 INCH,HEX SOC STL	74445	OBD
-25	366-1519-01			1	KNOB:MAN	80009	366-1519-01
	----- -----			-	. KNOB INCLUDES:		
	213-0725-00			2	. SETSCREW:3-048 X 0.094-00 INCH,HEX SOC STL	71159	OBD
-26	366-1391-00			1	KNOB:GRAY	80009	366-1391-00
	----- -----			-	. KNOB INCLUDES:		
	213-0140-00			1	. SETSCREWCH:2-56 X 0.95 HEX SOC STL	70276	BOD
-27	366-1480-02			1	PUSH BUTTON:ON-OFF	80009	366-1480-02
-28	366-1402-12			1	PUSH BUTTON:FAST	80009	366-1402-12
-29	366-1402-25			1	PUSH BUTTON:VAR PERSISTANCE	80009	366-1402-25
-30	366-1402-13			1	PUSH BUTTON:BI STABLE	80009	366-1402-13
-31	426-0681-00			15	FR,PUSH BUTTON:GRAY PLASTIC	80009	426-0681-00
-32	358-0378-00			3	BUSHING,SLEEVE:PRESS MOUNT	80009	358-0378-00
-33	----- -----			3	RES.,VAR:(SEE R1430,R1095,R1488A,B EPL)		
					(ATTACHING PARTS FOR EACH)		
-34	210-0583-00			1	NUT,PLAIN,HEX.:0.25-32 X 0.312 INCH,BRS	73743	2X20319-402
-35	210-0940-00			1	WASHER,FLAT:0.25 ID X 0.375 INCH OD,STL	79807	OBD
					- - - * - - -		
-36	----- -----			1	RES.,VAR:(SEE R1472A,B EPL)		
					(ATTACHING PARTS)		
-37	210-0583-00			1	NUT,PLAIN,HEX.:0.25-32 X 0.312 INCH,BRS	73743	2X20319-402
	210-0940-00			1	WASHER,FLAT:0.25 ID X 0.375 INCH OD,STL	79807	OBD
-38	210-0223-00			1	TERMINAL,LUG:0.25 INCH DIA,SE	78189	2101-14-03-2520N
					- - - * - - -		

http://www.manuals.hill.com

Fig. & Index No.	Tektronix Part No.	Serial/Model No. Eff	Dscont	Qty	1 2 3 4 5 Name & Description	Mfr Code	Mfr Part Number
3-39	333-1795-00	B010100	B149999	1	PANEL,FRONT:	80009	333-1795-00
	333-1795-01	B150000		1	PANEL,FRONT:	80009	333-1795-01
-40	----- -----			1	CKT BOARD ASSY:MODE SWITCH(SEE A17 EPL)		
					(ATTACHING PARTS)		
-41	211-0101-00			2	SCREW,MACHINE:4-40 X 0.25" 100 DEG,FLH STL	83385	OBD
					- - - * - - -		
	----- -----			-	. CKT BOARD ASSY INCLUDES:		
-42	131-0608-00			9	. CONTACT,ELEC:0.365 INCH LONG	22526	47357
-43	260-1593-00			1	. SWITCH,PUSH:FAST/VAR PERSIST/BI STABLE	80009	260-1593-00
-44	361-0411-00			5	. SPACER,PUSH SW:0.13 W X 0.375 INCH L,PLSTC	71590	J64285-00
-45	211-0001-00			2	. SCREW,MACHINE:2-56 X 0.25 INCH,PNH STL	83385	OBD
-46	220-0637-00			1	. NUT,BLOCK:1.05 X 0.50 X0.188 INCH OA	80009	220-0637-00
-47	136-0387-01			1	JACK,TIP:BLACK	71279	4352-1-0310
-48	136-0387-00			3	JACK,TIP:GRAY	71279	4352-1-0318
-49	132-0027-00			2	ADAPTER,CA TO C:	24655	0874-6540
					(ATTACHING PARTS FOR EACH)		
-50	212-0040-00			1	SCREW,MACHINE:8-32 X 0.375 100 DEG,FLH STL	83385	OBD
					- - - * - - -		
-51	386-2119-00			1	SUBPANEL,FRONT:	80009	386-2119-00
					(ATTACHING PARTS)		
-52	211-0538-00			4	SCREW,MACHINE:6-32 X 0.312"100 DEG,FLH STL	83385	OBD
	211-0589-00			2	SCREW,MACHINE:6-32 X 0.312 INCH,PNH BRS	83385	OBD
					- - - * - - -		
-53	351-0313-00			1	GUIDE,RACKMOUNT:19.218 INCH LONG,PAIR	80009	351-0313-00
					(ATTACHING PARTS)		
-54	210-0458-00			12	NUT,PLAIN,EXT W:8-32 X 0.344 INCH,STL	83385	OBD
					- - - * - - -		
-55	367-0138-00			2	HANDLE,BOW:U SHAPED	06540	14053-A-1032-1B
					(ATTACHING PARTS FOR EACH)		
-56	212-0518-00			2	SCREW,MACHINE:10-32 X 0.312 INCH,PNH STL	83385	OBD
					- - - * - - -		
-57	200-1448-00			1	COVER,ACCESS:	80009	200-1448-00
					(ATTACHING PARTS)		
-58	211-0008-00			6	SCREW,MACHINE:4-40 X 0.25 INCH,PNH STL	83385	OBD
					- - - * - - -		
-59	200-1401-00			1	COVER,ACCESS:	80009	200-1401-00
					(ATTACHING PARTS)		
-60	211-0101-00			5	SCREW,MACHINE:4-40 X 0.25" 100 DEG,FLH STL	83385	OBD
					- - - * - - -		
-61	210-0201-00			1	TERMINAL,LUG:SE #4	78189	2104-04-00-2520N
					(ATTACHING PARTS)		
-62	210-0586-00			1	NUT,PLAIN,EXT W:4-40 X 0.25 INCH,STL	78189	OBD
					- - - * - - -		
	644-0056-00			1	POWER SW ASSY:	80009	644-0056-00
					(ATTACHING PARTS)		
-63	210-0586-00			2	NUT,PLAIN,EXT W:4-40 X 0.25 INCH,STL	78189	OBD
					- - - * - - -		
	----- -----			-	. POWER SWITCH ASSY INCLUDES:		
-64	407-1570-00			1	. BRACKET,ANGLE:POWER SWITCH	80009	407-1570-00
-65	211-0008-00			2	. SCREW,MACHINE:4-40 X 0.25 INCH,PNH STL	83385	OBD
-66	200-1731-00			1	. COVER,ELEC SW:1.9 X 1.0 INCH	80009	200-1731-00
-67	211-0034-00			1	. SCREW,MACHINE:2-56 X 0.50 INCH,PNH	83385	OBD
-68	210-0850-00			1	. WASHER,FLAT:0.093 ID X 0.281 INCH OD	12327	OBD
-69	210-0405-00			1	. NUT,PLAIN,HEX.:2-56 X 0.188 INCH,BRS	73743	2X12157-402
-70	260-1709-00			1	. SWITCH,PUSH:POWER	77342	A9T5 762-6-3
-71	343-0004-00			1	CLAMP,LOOP:0.312 INCH DIAMETER,PLSTC	95987	5-16-6B
					(ATTACHING PARTS)		
-72	211-0538-00			1	SCREW,MACHINE:6-32 X 0.312"100 DEG,FLH STL	83385	OBD
-73	210-0863-00			1	WSHR,LOOP CLAMP:FOR 0.50" WIDE CLAMP,STL	95987	C191
-74	210-0457-00			1	NUT,PLAIN,EXT W:6-32 X 0.312 INCH,STL	83385	OBD
					- - - * - - -		

http://manuman.com/

Fig. & Index No.	Tektronix Part No.	Serial/Model No. Eff	Dscont	Qty	1 2 3 4 5 Name & Description	Mfr Code	Mfr Part Number
3-75	343-0004-00			1	CLAMP,LOOP:0.312 INCH DIAMETER,PLSTC	95987	5-16-6B
					(ATTACHING PARTS)		
-76	211-0510-00			1	SCREW,MACHINE:6-32 X 0.375 INCH,PNH STL	83385	OBD
-77	210-0202-00			1	TERMINAL,LUG:SE #6	78189	2104-06-00-2520N
-78	210-0863-00			1	WSHR,LOOP CLAMP:FOR 0.50" WIDE CLAMP,STL	95987	C191
-79	210-0457-00			1	NUT,PLAIN,EXT W:6-32 X 0.312 INCH,STL	83385	OBD
					- - - * - - -		
-80	343-0004-00			1	CLAMP,LOOP:0.312 INCH DIAMETER,PLSTC	95987	5-16-6B
					(ATTACHING PARTS)		
-81	210-0457-00			1	NUT,PLAIN,EXT W:6-32 X 0.312 INCH,STL	83385	OBD
-82	210-0863-00			1	WSHR,LOOP CLAMP:FOR 0.50" WIDE CLAMP,STL	95987	C191
					- - - * - - -		
-83	386-2412-00			1	SUPPORT,CRT:	80009	386-2412-00
					(ATTACHING PARTS)		
-84	211-0538-00			2	SCREW,MACHINE:6-32 X 0.312"100 DEG,FLH STL	83385	OBD
	211-0507-00			1	SCREW,MACHINE:6-32 X 0.312 INCH,PNH STL	83385	OBD
-85	210-0457-00			3	NUT,PLAIN,EXT W:6-32 X 0.312 INCH,STL	83385	OBD
					- - - * - - -		
-86	337-1731-00			1	SHIELD,ELEC:REGULATOR	80009	337-1731-00
					(ATTACHING PARTS)		
-87	211-0504-00			4	SCREW,MACHINE:6-32 X 0.25 INCH,PNH STL	83385	OBD
					- - - * - - -		
-88	441-1060-01			1	CHAS,ELEC EQPT:MAIN	80009	441-1060-01
					(ATTACHING PARTS)		
-89	211-0538-00			1	SCREW,MACHINE:6-32 X 0.312"100 DEG,FLH STL	83385	OBD
-90	211-0504-00			2	SCREW,MACHINE:6-32 X 0.25 INCH,PNH STL	83385	OBD
-91	211-0025-00			2	SCREW,MACHINE:4-40 X 0.375 100 DEG,FLH STL	83385	OBD
					- - - * - - -		
-92	----- -----			6	TRANSISTOR:(SEE Q874,Q903,Q850,Q933,Q958,		
	----- -----			-	Q988 EPL)		
					(ATTACHING PARTS FOR EACH)		
-93	211-0511-00			2	SCREW,MACHINE:6-32 X 0.50 INCH,PNH STL	83385	OBD
-94	386-0978-00			1	INSULATOR,PLATE:0.002 INCH MICA,FOR TO-3	80009	386-0978-00
					- - - * - - -		
-95	----- -----			1	CKT BOARD ASSY:REGULATOR(SEE A12 EPL)		
	----- -----			-	CKT BOARD ASSY INCLUDES:		
-96	131-0608-00			49	. CONTACT,ELEC:0.365 INCH LONG	22526	47357
-97	136-0361-00			6	. SOCKET,PLUG-IN:	80009	136-0361-00
-98	131-0847-00			12	. TERMINAL STUD:6-32 X 0.435 INCH LONG	80009	131-0847-00
-99	136-0384-00			12	. CONTACT,ELEC:FOR 0.04 DIAMETER PIN	00779	52120
-100	136-0183-00			3	. SOCKET,PLUG-IN:3 PIN	80009	136-0183-00
-101	136-0235-00			6	. SOCKET,PLUG-IN:6 CONTACT,ROUND	71785	133-96-12-062
-102	136-0252-04	B010100 B010324		36	. CONTACT,ELEC:0.188 INCH LONG	22526	75060
	136-0252-04	B010325		9	. CONTACT,ELEC:0.188 INCH LONG	22526	75060
	136-0350-00	B010325		9	. SOCKET,PLUG-IN:3 PIN,LOW PROFILE	80009	136-0350-00
-103	136-0269-02			1	. SOCKET,PLUG-IN:14 CONTACT,LOW CLEARANCE	01295	C931402
-104	214-0579-00			1	. TERM.,TEST PT:0.40 INCH LONG	80009	214-0579-00
-105	214-1291-00			3	. HEAT SINK,ELEC:XSTR,0.72 OD X 0.375"H	05820	207-AB
-106	344-0154-00			2	. CLIP,ELECTRICAL:FOR 0.25 INCH DIA FUSE	80009	344-0154-00
-107	220-0614-00			1	NUT BLOCK:6-32 X 0.347 X 1.25 INCH LONG	80009	220-0614-00
					(ATTACHING PARTS)		
-108	211-0507-00			2	SCREW,MACHINE:6-32 X 0.312 INCH,PNH STL	83385	OBD
					- - - * - - -		
-109	386-2054-00			1	SUPPORT:POWER SUPPLY	80009	386-2054-00
					(ATTACHING PARTS)		
-110	211-0101-00			2	SCREW,MACHINE:4-40 X 0.25" 100 DEG,FLH STL	83385	OBD
					- - - * - - -		
-111	351-0295-02			3	GUIDE,SLIDE:	80009	351-0295-02
					(ATTACHING PARTS FOR EACH)		
-112	211-0105-00			1	SCREW,MACHINE:4-40 X 0.188"100 DEG,FLH STL	83385	OBD
-113	211-0101-00	B010100 B100799		1	SCREW,MACHINE:4-40 X 0.25" 100 DEG,FLH STL	83385	OBD
					- - - * - - -		

http://manualsarchive.com

Fig. & Index No.	Tektronix Part No.	Serial/Model No. Eff	Dscont	Qty	1 2 3 4 5 Name & Description	Mfr Code	Mfr Part Number
3-114	351-0305-01			3	GUIDE,PLUG-IN:UPPER	80009	351-0305-01
					(ATTACHING PARTS FOR EACH)		
-115	211-0105-00			1	SCREW,MACHINE:4-40 X 0.188"100 DEG,FLH STL	83385	OBD
					- - - * - - -		
-116	129-0441-00			2	POST,ELEC-MECH:0.125 OD X 5.045 INCH LONG	80009	129-0441-00
					(ATTACHING PARTS FOR EACH)		
-117	211-0087-00			2	SCREW,MACHINE:2-56 X 0.188 INCH,FLH SST	70318	OBD
					- - - * - - -		
-118	407-1145-02			1	BRKT,HEAT SINK:RIGHT	80009	407-1145-02
					(ATTACHING PARTS)		
-119	211-0504-00			2	SCREW,MACHINE:6-32 X 0.25 INCH,PNH STL	83385	OBD
					- - - * - - -		
-120	437-0143-01			1	FRAME ASSEMBLY:	80009	437-0143-01
-121	348-0354-00			2	SHLD GSKT,ELEC:8.10 INCH LONG	80009	348-0354-00
	213-0054-00			3	SCR,TPG,THD FOR:6-32 X 0.312 INCH,PNH STL	83385	OBD
	136-0589-00			1	CRT SOCKET ASSY:	80009	136-0589-00
-122	136-0304-02			1	. SOCKET,PLUG-IN:CRT	80009	136-0304-02
-123	200-0917-01			1	. COV,ELECTRON TU:2.052 OD X 0.291" THK,PLSTC	80009	200-0917-01
-124	367-0117-00			1	. PULL,SOC,PL-IN:	80009	367-0117-00
-125	343-0254-00			1	. CLAMP,CRT SKT:	80009	343-0254-00
-126	348-0012-00			1	. GROMMET,RUBBER:	72653	1043-1M
-127	131-0707-00			7	. CONTACT,ELEC:0.48"L,22-26 AWG WIRE	22526	47439
-128	131-0621-00			6	. CONTACT,ELEC:0.577"L,22-26 AWG WIRE	22526	46231
	352-0161-05			1	. CONN BODY,PL,EL:3 WIRE GREEN	80009	352-0161-05
	352-0162-09			1	. CONN BODY,PL,EL:4 WIRE WHITE	80009	352-0162-09
	352-0205-00			1	. CONN BODY,PL,EL:9 WIRE BLACK	80009	352-0205-00
-129	179-1825-00			1	WIRING HARNESS:VERTICAL SIGNAL	80009	179-1825-00
	131-0707-00			2	. CONTACT,ELEC:0.48"L,22-26 AWG WIRE	22526	47439
	131-0708-00			2	. CONTACT,ELEC:0.48"L,28-32 AWG WIRE	22526	47437
-130	210-0774-00			2	. EYELET,METALLIC:0.152 OD X 0.245 INCH L,BRS	80009	210-0774-00
-131	210-0775-00			2	. EYELET,METALLIC:0.126 OD X 0.23 INCH L,BRS	80009	210-0775-00
	352-0162-09			1	. CONN BODY,PL,EL:4 WIRE WHITE	80009	352-0162-09
	179-1826-00			1	WIRING HARNESS:SWEEP GATE	80009	179-1826-00
	131-0707-00			8	. CONTACT,ELEC:0.48"L,22-26 AWG WIRE	22526	47439
	131-0708-00			8	. CONTACT,ELEC:0.48"L,28-32 AWG WIRE	22526	47437
	352-0166-03			1	. CONN BODY,PL,EL:8 WIRE ORANGE	80009	352-0166-03
	179-1828-01			1	WIRING HARNESS:COAX	80009	179-1828-01
	131-0707-00			2	. CONTACT,ELEC:0.48"L,22-26 AWG WIRE	22526	47439
	131-0708-00			2	. CONTACT,ELEC:0.48"L,28-32 AWG WIRE	22526	47437
	352-0169-01			1	. CONN BODY,PL,EL:2 WIRE BROWN	80009	352-0169-01
	352-0169-05			1	. CONN BODY,PL,EL:2 WIRE,GREEN	80009	352-0169-05
	352-0169-09			1	. CONN BODY,PL,EL:2 WIRE WHITE	80009	352-0169-09
	131-0621-00			7	CONTACT,ELEC:0.577"L,22-26 AWG WIRE	22526	46231
	131-0707-00			343	CONTACT,ELEC:0.48"L,22-26 AWG WIRE	22526	47439
	131-0708-00			27	CONTACT,ELEC:0.48"L,28-32 AWG WIRE	22526	47437
-132	131-0861-00			4	CONTACT,ELEC:QUICK DISCONNECT	00779	42617-2
-133	131-1538-00			4	CONTACT,ELEC:CRIMP-ON,22-26 AWG WIRE	22526	75369-002
	210-0774-00			13	EYELET,METALLIC:0.152 OD X 0.245 INCH L,BRS	80009	210-0774-00
	210-0775-00			13	EYELET,METALLIC:0.126 OD X 0.23 INCH L,BRS	80009	210-0775-00
-134	200-1075-00			4	COVER,ELEC CONN:PLASTIC	00779	1-480435-0
-135	352-0171-00			3	CONN BODY,PL,EL:1 WIRE BLACK	80009	352-0171-00
	352-0171-03			2	CONN BODY,PL,EL:1 WIRE ORANGE	80009	352-0171-03
-136	352-0169-00			2	CONN BODY,PL,EL:2 WIRE BLACK	80009	352-0169-00
	352-0169-01			1	CONN BODY,PL,EL:2 WIRE BROWN	80009	352-0169-01
	352-0169-02			1	CONN BODY,PL,EL:2 WIRE RED	80009	352-0169-00
	352-0169-04			1	CONN BODY,PL,EL:2 WIRE YELLOW	80009	352-0169-04
	352-0169-08			3	CONN BODY,PL,EL:2 WIRE GRAY	80009	352-0169-08
	352-0169-09			2	CONN BODY,PL,EL:2 WIRE WHITE	80009	352-0169-09
-137	352-0161-00			4	CONN BODY,PL,EL:3 WIRE BLACK	80009	352-0161-00
	352-0161-01			1	CONN BODY,PL,EL:3 WIRE BROWN	80009	352-0161-01
	352-0161-02			1	CONN BODY,PL,EL:3 WIRE RED	80009	352-0161-02
	352-0161-06			1	CONN BODY,PL,EL:3 WIRE BLUE	80009	352-0161-05
	352-0161-09			3	CONN BODY,PL,EL:3 WIRE WHITE	80009	352-0161-09

http://manuals.tektronix.com

Fig. & Index No.	Tektronix Part No.	Serial/Model No. Eff	Dscont	Qty	1 2 3 4 5 Name & Description	Mfr Code	Mfr Part Number
3-138	352-0162-00			2	CONN BODY,PL,EL:4 WIRE BLACK	80009	352-0162-00
	352-0162-01			1	CONN BODY,PL,EL:4 WIRE BROWN	80009	352-0162-01
	352-0162-05			1	CONN BODY,PL,EL:4 WIRE GREEN	80009	352-0162-05
	352-0162-08			1	CONN BODY,PL,EL:4 WIRE GRAY	80009	352-0162-08
	352-0162-09			2	CONN BODY,PL,EL:4 WIRE WHITE	80009	352-0162-09
-139	352-0163-00			1	CONN BODY,PL,EL:5 WIRE BLACK	80009	352-0163-00
	352-0163-03			1	CONN BODY,PL,EL:5 WIRE ORANGE	80009	352-0163-03
	352-0163-05			1	CONN BODY,PL,EL:5 WIRE GREEN	80009	352-0163-05
	352-0163-06			2	CONN BODY,PL,EL:5 WIRE BLUE	80009	352-0163-06
	352-0163-08			4	CONN BODY,PL,EL:5 WIRE GRAY	80009	352-0163-08
-140	352-0164-00			2	CONN BODY,PL,EL:6 WIRE BLACK	80009	352-0164-00
	352-0164-09			1	CONN BODY,PL,EL:6 WIRE WHITE	80009	352-0164-09
-141	352-0165-05			1	CONN BODY,PL,EL:7 WIRE GREEN	80009	352-0165-05
-142	352-0166-00			4	CONN BODY,PL,EL:8 WIRE BLACK	80009	352-0166-00
	352-0166-01			2	CONN BODY,PL,EL:8 WIRE BROWN	80009	352-0166-01
	352-0166-03			2	CONN BODY,PL,EL:8 WIRE ORANGE	80009	352-0166-03
-143	352-0167-00			2	CONN BODY,PL,EL:9 WIRE BLACK	80009	352-0167-00
	352-0167-04			2	CONN BODY,PL,EL:9 WIRE YELLOW	80009	352-0167-04
	352-0167-05			2	CONN BODY,PL,EL:9 WIRE GREEN	80009	352-0167-05
-144	352-0168-00			2	CONN BODY,PL,EL:10 WIRE BLACK	80009	352-0168-00
	352-0168-05			2	CONN BODY,PL,EL:10 WIRE GREEN	80009	352-0168-05
	352-0168-04			2	CONN BODY,PL,EL:10 WIRE YELLOW	80009	352-0168-04
-145	352-0205-00			1	CONN BODY,PL,EL:9 WIRE BLACK	80009	352-0205-00
-146	175-0825-00			FT	WIRE,ELECTRICAL:2 WIRE RIBBON	23499	TEK-175-0825-00
-146	175-0825-00			FT	WIRE,ELECTRICAL:2 WIRE RIBBON	23499	TEK-175-0825-00
-147	175-0826-00			FT	WIRE,ELECTRICAL:3 WIRE RIBBON	08261	TEK-175-0826-00
-148	175-0827-00			FT	WIRE,ELECTRICAL:4 WIRE RIBBON	08261	TEK-175-0827-00
-149	175-0828-00			FT	WIRE,ELECTRICAL:5 WIRE RIBBON	23499	TEK-175-0828-00
-150	175-0829-00			FT	WIRE,ELECTRICAL:6 WIRE RIBBON	83501	TEK-175-0829-00
-151	175-0830-00			FT	WIRE,ELECTRICAL:7 WIRE RIBBON	08261	TEK-175-0830-00
-152	175-0831-00			FT	WIRE,ELECTRICAL:8 WIRE RIBBON	08261	TEK-175-0831-00
-153	175-0832-00			FT	WIRE,ELECTRICAL:9 WIRE RIBBON	23499	TEK-175-0832-00
-154	175-0833-00			FT	WIRE,ELECTRICAL:10 WIRE RIBBON	23499	TEK-175-0833-00
-156	384-1060-00			1	EXTENSION SHAFT:7.831 INCH LONG	80009	384-1060-00

http://manuals.hill.com

Fig. & Index No.	Tektronix Part No.	Serial/Model No. Eff	Dscont	Qty	1 2 3 4 5 Name & Description	Mfr Code	Mfr Part Number
4-1	----- -----			1	CKT BOARD ASSY:VERTICAL AMP(SEE A5 EPL)		
					(ATTACHING PARTS)		
-2	211-0008-00			3	SCREW,MACHINE:4-40 X 0.25 INCH,PNH STL	83385	OBD
					- - - * - - -		
	----- -----			-	. CKT BOARD ASSY INCLUDES:		
-3	131-0566-00			4	. LINK,TERM.CONNE:0.086 DIA X 2.375 INCH L	0000C	L-2007-1
-4	131-0608-00			8	. CONTACT,ELEC:0.365 INCH LONG	22526	47357
-5	131-1003-00			3	. CONNECTOR BODY,:CKT BD MT,3 PRONG	80009	131-1003-00
-6	136-0252-04	B010100	B010324	36	. CONTACT,ELEC:0.188 INCH LONG	22526	75060
	136-0350-00	B010325		12	SOCKET,PLUG-IN:3 PIN,LOW PROFILE	80009	136-0350-00
-7	214-0579-00			2	. TERM.,TEST PT:0.40 INCH LONG	80009	214-0579-00
-8	131-0775-00			2	. TERMINAL,STUD:6-32 X 0.25 X 0.375" LG	80009	131-0775-00
					(ATTACHING PARTS FOR EACH)		
-9	211-0503-00			1	. SCREW,MACHINE:6-32 X 0.188 INCH,PNH STL	83385	OBD
					- - - * - - -		
-10	346-0117-00			1	. STRAP,GROUNDING:	80009	346-0117-00
-11	----- -----			1	CKT BOARD ASSY:HORIZONTAL AMP(SEE A6 EPL)		
					(ATTACHING PARTS)		
-12	211-0008-00			2	SCREW,MACHINE:4-40 X 0.25 INCH,PNH STL	83385	OBD
					- - - * - - -		
	----- -----			-	. CKT BOARD ASSY INCLUDES:		
-13	131-0608-00			23	. CONTACT,ELEC:0.365 INCH LONG	22526	47357
-14	131-1003-00			2	. CONNECTOR BODY,:CKT BD MT,3 PRONG	80009	131-1003-00
-15	136-0252-04	B010100	B010324	24	. CONTACT,ELEC:0.188 INCH LONG	22526	75060
	136-0350-00	B010325		4	SOCKET,PLUG-IN:3 PIN,LOW PROFILE	80009	136-0350-00
	136-0365-00	B010325		4	SOCKET,XSTR:ASSEMBLY	80009	136-0365-00
-16	136-0260-01			1	. SOCKET,PLUG-IN:16 CONTACT,RECT SHAPE	71785	133-51-02-075
-17	214-0579-00			1	. TERM.,TEST PT:0.40 INCH LONG	80009	214-0579-00
-18	210-0627-00			2	RIVET,SOLID:0.042 DIA X 0.25 INCH,RDH	80009	210-0627-00
-19	343-0097-00			2	RTNR,TRANSISTOR:HEAT SINK	80009	343-0097-00
					(ATTACHING PARTS FOR EACH)		
-20	210-0599-00			2	NUT,SLEEVE:4-40 X 0.391 INCH LONG	80009	210-0599-00
-21	214-0368-00			1	SPRING,HLCPS:0.24 DIA X 0.438 INCH LONG	80009	214-0368-00
					- - - * - - -		
-22	352-0062-00			2	HOLDER,HEAT SK:1.187 X 1.187 INCHES,PLSTC	80009	352-0062-00
					(ATTACHING PARTS FOR EACH)		
-23	211-0008-00			2	SCREW,MACHINE:4-40 X 0.25 INCH,PNH STL	83385	OBD
-24	211-0012-00			2	SCREW,MACHINE:4-40 X 0.375 INCH,PNH STL	83385	OBD
-25	210-0406-00			4	NUT,PLAIN,HEX.:4-40 X 0.188 INCH,BRS	73743	2X12161-402
					- - - * - - -		
-26	119-0368-00			1	DELAY LINE,ELEC:	80009	119-0368-00
					(ATTACHING PARTS)		
-27	213-0034-00			2	SCR,TPG,THD CTG:4-40 X 0.188 INCH,PNH STL	83385	OBD
					- - - * - - -		
-28	351-0087-00			1	GUIDE,CKT CARD:4.75 INCH LONG,PLASTIC	80009	351-0087-00
-29	348-0031-00			1	GROMMET,PLASTIC:0.156 INCH DIA	80009	348-0031-00
-30	348-0064-00			1	GROMMET,PLASTIC:0.625 INCH DIA	80009	348-0064-00
-31	255-0334-00			FT	PLASTIC CHANNEL:12.75 INCHES LONG	80009	255-0334-00
-32	407-1001-00			1	BRKT,CRT SHLD:FRONT	80009	407-1001-00
					(ATTACHING PARTS)		
-33	211-0589-00			2	SCREW,MACHINE:6-32 X 0.312 INCH,PNH BRS	83385	OBD
-34	210-0457-00			2	NUT,PLAIN,EXT W:6-32 X 0.312 INCH,STL	83385	OBD
	211-0538-00			2	SCREW,MACHINE:6-32 X 0.312"100 DEG,FLH STL	83385	OBD
					- - - * - - -		
-35	----- -----			1	CKT BOARD ASSY:STORAGE(SEE A14 EPL)		
					(ATTACHING PARTS)		
-36	211-0008-00			2	SCREW,MACHINE:4-40 X 0.25 INCH,PNH STL	83385	OBD
-37	129-0236-00			2	POST,METALLIC:4-40 X 0.188 X 0.375" LONG	06540	9726-A-D440
-38	210-0586-00			2	NUT,PLAIN,EXT W:4-40 X 0.25 INCH,STL	78189	OBD
					- - - * - - -		
	----- -----			-	. CKT BOARD ASSY INCLUDES:		
-39	131-0608-00	B010100	B149999	98	. CONTACT,ELEC:0.365 INCH LONG	22526	47357
	131-0608-00	B150000		111	. CONTACT,ELEC:0.365 INCH LONG	22526	47357
-40	136-0252-04	B010100	B010324	189	. CONTACT,ELEC:0.188 INCH LONG	22526	75060
	136-0350-00	B010100	B149999X	63	. SOCKET,PLUG-IN:3 PIN,LOW PROFILE	80009	136-0350-00

http://manuals.com

Fig. & Index No.	Tektronix Part No.	Serial/Model No. Eff	Dscont	Qty	1 2 3 4 5 Name & Description	Mfr Code	Mfr Part Number
4-41	136-0260-01			3	. SOCKET,PLUG-IN:16 CONTACT,RECT SHAPE	71785	133-51-02-075
-42	136-0269-02			4	. SOCKET,PLUG-IN:14 CONTACT,LOW CLEARANCE	01295	C931402
-43	214-0579-00			8	. TERM.,TEST PT:0.40 INCH LONG	80009	214-0579-00
-44	260-1378-00			1	. SWITCH,PUSH:VERT MODE	71590	2KBC140000-608
-45	366-1402-02			1	. PUSH BUTTON:LEFT	80009	366-1402-02
-46	366-1402-03			1	. PUSH BUTTON:ALT	80009	366-1402-03
	131-0993-00	XB080750	B149999	1	. LINK,TERM.CONNE:2 WIRE BLACK	00779	530153-2
	131-0993-00	B150000		2	. LINK,TERM.CONNE:2 WIRE BLACK	00779	530153-2
-47	366-1402-04			1	. PUSH BUTTON:ADD	80009	366-1402-04
-48	366-1257-31			1	. PUSH BUTTON:CHOP	80009	366-1257-31
-49	366-1402-06			1	. PUSH BUTTON:RIGHT	80009	366-1402-06
-50	260-1379-00			1	. SWITCH,PUSH:TRIG SOURCE	71590	2KBC120000-595
-51	366-1402-02			1	. PUSH BUTTON:LEFT	80009	366-1402-02
-52	366-1402-07			1	. PUSH BUTTON:VERT MODE	80009	366-1402-07
-53	366-1402-06			1	. PUSH BUTTON:RIGHT	80009	366-1402-06
-54	260-1594-00			1	. SWITCH,PUSH:NON STORE/STORE/SAVE	80009	260-1594-00
-55	366-1402-08			1	. PUSH BUTTON:	80009	366-1402-08
-56	366-1257-85			1	. PUSH BUTTON:GRAY--STORE	80009	366-1257-85
-57	366-1402-21			1	. PUSH BUTTON:	80009	366-1402-21
-58	361-0411-00			15	. SPACER,PUSH SW:0.13 W X 0.375 INCH L,PLSTC	71590	J64285-00
-59	384-1099-00			5	. EXTENSION SHAFT:PUSH BUTTON,1.54 INCH LONG	80009	384-1099-00
-60	384-1136-00			6	. EXTENSION SHAFT:0.95 INCH LONG	80009	384-1136-00
-61	352-0019-00			2	. HOLDER:PLASTIC	80009	352-0019-00
					(ATTACHING PARTS FOR EACH)		
-62	213-0088-00			1	. SCR,TPG,THD CTG:4-24 X 0.25 INCH,PNH STL	83385	OBD
	200-1799-00	XB100000		1	COVER,CKT CARD:CKT BOARD,HV	80009	200-1799-00
					(ATTACHING PARTS)		
	211-0008-00	XB100000		1	SCREW,MACHINE:4-40 X 0.25 INCH,PNH STL	83385	OBD
	210-0801-00	XB100000		1	WASHER,FLAT:0.14 ID X 0.28I OD NP STL	12327	OBD
					- - - * - - -		
-63	407-1397-00			1	BRACKET,ANGLE:	80009	407-1397-00
					(ATTACHING PARTS)		
-64	211-0147-00			2	SCREW,MACHINE:4-40 X 0.25 INCH,PNH STL	83385	OBD
-65	210-0586-00			2	NUT,PLAIN,EXT W:4-40 X 0.25 INCH,STL	78189	OBD
					- - - * - - -		
-66	386-2411-00			1	SUPPORT,CRT:	80009	386-2411-00
					(ATTACHING PARTS)		
-67	211-0559-00			2	SCREW,MACHINE:6-32 X 0.375"100 DEG,FLH STL	83385	OBD
-68	210-0457-00			2	NUT,PLAIN,EXT W:6-32 X 0.312 INCH,STL	83385	OBD
-69	211-0510-00			2	SCREW,MACHINE:6-32 X 0.312 INCH,PNH STL	83385	OBD
-70	210-0993-00			2	WSHR,SHOULDERED:0.143" ID X 0.75" OD,BRS	79807	OBD
					- - - * - - -		
-71	407-1186-00			1	BRACKET,CRT:	80009	407-1186-00
					(ATTACHING PARTS)		
	211-0510-00			2	SCREW,MACHINE:6-32 X 0.312 INCH,PNH STL	83385	OBD
	210-0457-00			2	NUT,PLAIN,EXT W:6-32 X 0.312 INCH,STL	83385	OBD
					- - - * - - -		
	672-0572-00	XB140000		1	CKT BOARD ASSY:PROTECTION AND READOUT		
-72	----- -----	XB140000		1	. CKT BOARD ASSY:PROTECTION(SEE A18 EPL)		
-73	253-0162-00	XB140000		FT	. . TAPE,PRESS,SENS:	04963	4116
-74	131-0589-00	XB140000		20	. . CONTACT,ELEC:0.46 INCH LONG	22526	47350
-75	210-0702-00	XB140000		2	. EYELET,METALLIC:0.047 OD X 0.125 INCH LONG	07707	S6127
-76	----- -----			1	. CKT BOARD ASSY:READOUT(SEE A13 EPL)		
					(ATTACHING PARTS)		
-77	211-0008-00			1	. SCREW,MACHINE:4-40 X 0.25 INCH,PNH STL	83385	OBD
					- - - * - - -		
	----- -----			-	. . CKT BOARD ASSY INCLUDES:		
-78	131-0608-00			40	. . CONTACT,ELEC:0.365 INCH LONG	22526	47357
-79	131-1003-00			6	. . CONNECTOR BODY,:CKT BD MT,3 PRONG	80009	131-1003-00
-80	136-0235-00			1	. . SOCKET,PLUG-IN:6 CONTACT,ROUND	71785	133-96-12-062
-81	136-0252-01			6	. . CONTACT,ELEC:0.178 INCH LONG	00779	1-332095-2
	136-0252-04	B010100	B040374	39	. . CONTACT,ELEC:0.188 INCH LONG	22526	75060
	136-0254-04	B040375		33	. . CONTACT ELEC:	80009	136-0254-04

http://manoman.sqrt.com

Fig. & Index No.	Tektronix Part No.	Serial/Model No. Eff	Dscont	Qty	1 2 3 4 5 Name & Description	Mfr Code	Mfr Part Number
4-	136-0350-00	B040374		1	. . SOCKET,PLUG-IN:3 PIN,LOW PROFILE	80009	136-0350-00
-82	136-0260-01			14	. . SOCKET,PLUG-IN:16 CONTACT,RECT SHAPE	71785	133-51-02-075
-83	136-0269-02			3	. . SOCKET,PLUG-IN:14 CONTACT,LOW CLEARANCE	01295	C931402
-84	260-0723-00			1	. . SWITCH,SLIDE:DPDT,0.5A,125VAC	79727	GF126-0028
-85	214-0579-00	B010100	B139999	21	. . TERM.,TEST PT:0.40 INCH LONG	80009	214-0579-00
	214-0579-00	B140000		20	. . TERM,TEST PT:0.40 INCH LONG	80009	214-0579-00
-86	195-0114-09			1	LEAD SET:READOUT	80009	195-0114-09
	621-0474-00			1	POWER SUPPLY:HIGH VOLTAGE	80009	621-0474-00
					(ATTACHING PARTS)		
-87	211-0504-00			4	SCREW,MACHINE:6-32 X 0.25 INCH,PNH STL	83385	OBD
					- - - * - - -		
	----- -----			-	. HIGH VOLTAGE ASSY INCLUDES:		
-88	351-0324-00			2	. GUIDE,CKT CARD:	80009	351-0324-00
-89	----- -----			1	. CKT BOARD ASSY:Z AXIS(SEE A8 EPL)		
					(ATTACHING PARTS)		
-90	211-0008-00			3	. SCREW,MACHINE:4-40 X 0.25 INCH,PNH STL	83385	OBD
					- - - * - - -		
	----- -----			-	. . CKT BOARD ASSY INCLUDES:		
-91	131-0608-00			52	. . CONTACT,ELEC:0.365 INCH LONG	22526	47357
-92	131-1003-00			3	. . CONNECTOR BODY,:CKT BD MT,3 PRONG	80009	131-1003-00
-93	136-0252-04	B010100	B040325	45	. . CONTACT,ELEC:0.188 INCH LONG	22526	75060
	136-0350-00	B010325		12	. . SOCKET,PLUG-IN:3 PIN,LOW PROFILE	80009	136-0350-00
	136-0365-00	B010325		2	. . SOCKET,PLUG-IN:3 PIN ASSY	80009	136-0365-00
-94	----- -----			1	. CKT BOARD ASSY:ANODE(SEE A9 EPL)		
					(ATTACHING PARTS)		
-95	211-0040-00			3	. SCREW,MACHINE:4-40 X 0.25",BDCH PLSTC	26365	OBD
-96	211-0008-00			1	. SCREW,MACHINE:4-40 X 0.25 INCH,PNH STL	83385	OBD
					- - - * - - -		
-97	----- -----			1	. CKT BOARD ASSY:HIGH VOLTAGE(SEE A10 EPL)		
					(ATTACHING PARTS)		
-98	211-0008-00			3	. SCREW,MACHINE:4-40 X 0.25 INCH,PNH STL	83385	OBD
-99	211-0040-00			1	. SCREW,MACHINE:4-40 X 0.25",BDCH PLSTC	26365	OBD
					- - - * - - -		
	----- -----			-	. . CKT BOARD ASSY INCLUDES:		
-100	124-0118-00			1	. . TERMINAL BOARD:1 NOTCH	80009	124-0118-00
					(ATTACHING PARTS)		
-101	361-0007-00			1	. . SPACER,SLEEVE:0.250 INCH DIA,PLASTIC	80009	361-0007-00
					- - - * - - -		
	----- -----			-	. . . TERMINAL STRIP INCLUDES:		
-102	355-0046-00			1	. . . MOUNT,TERM. BD:0.577 INCH H	80009	355-0046-00
-103	124-0119-00			1	. . TERMINAL BOARD:2 NOTCH	80009	124-0119-00
					(ATTACHING PARTS)		
-104	361-0007-00			1	. . SPACER,SLEEVE:0.250 INCH DIA,PLASTIC	80009	361-0007-00
					- - - * - - -		
	----- -----			-	. . . TERMINAL STRIP INCLUDES:		
-105	355-0046-00			1	. . . MOUNT,TERM. BD:0.577 INCH H	80009	355-0046-00
-106	131-0589-00			7	. . CONTACT,ELEC:0.46 INCH LONG	22526	47350
	131-0608-00			21	. . CONTACT,ELEC:0.365 INCH LONG	22526	47357
-107	136-0252-04			9	. . CONTACT,ELEC:0.188 INCH LONG	22526	75060
-108	166-0292-00			2	. . SPACER,SLEEVE:PLSTC,0.155 DIA X 0.065"L	80009	166-0292-00
-109	214-0579-00			1	. . TERM.,TEST PT:0.40 INCH LONG	80009	214-0579-00
-110	----- -----			1	. TRANSISTOR:		
					(ATTACHING PARTS)		
-111	213-0146-00			2	. SCR,TPG,THD FOR:6-20 X 0.313 INCH,PNH STL	83385	OBD
-112	386-0978-00			1	. INSULATOR,PLATE:0.002 INCH MICA,FOR TO-3	80009	386-0978-00
					- - - * - - -		
-113	136-0280-00			1	. SOCKET,PLUG-IN:FOR TO-3	22753	PTS1
					(ATTACHING PARTS)		
-114	211-0101-00			2	. SCREW,MACHINE:4-40 X 0.25" 100 DEG,FLH STL	83385	OBD
-115	210-0586-00			2	. NUT,PLAIN,EXT W:4-40 X 0.25 INCH,STL	78189	OBD
					- - - * - - -		
-116	348-0063-00			1	. GROMMET,PLASTIC:0.50 INCH DIA	80009	348-0063-00
-117	343-0088-00			1	. CLAMP,LOOP:0.062 INCH DIA	80009	343-0088-00

http://manuals.hillstill.com

Fig. & Index No.	Tektronix Part No.	Serial/Model No. Eff	Dscont	Qty	1 2 3 4 5 Name & Description	Mfr Code	Mfr Part Number
4-118	348-0085-00	B010100	B119999	FT	. GROMMET,PLASTIC:U-SHAPED	80009	348-0085-00
	358-0166-00	B120000		1	. GROMMET,PLASTIC:BLACK	80009	358-0166-00
-119	129-0251-01			1	. POST,NONMETALLI:4-40 X 0.250D X 1.125" LG	80009	129-0251-01
					(ATTACHING PARTS)		
-120	129-0236-00			1	. POST,ELEC-MECH0.187" HEX	06540	9726-A-0440
	211-0008-00			1	. SCREW,MACHINE:4-40 X 0.25 INCH,PNH STL	83385	OBD
	210-0004-00	XB110948		2	. WASHER,LOCK:INTL,0.12 ID X 0.26"OD,STL	78189	1204-00-00-0541C.
					- - - * - - -		
-121	129-0251-00			3	. INSULATOR,STDF:0.250 OD X 1.125" L,PLSTC	80009	129-0251-00
					(ATTACHING PARTS FOR EACH)		
-122	211-0040-00			1	. SCREW,MACHINE:4-40 X 0.25",BDCH PLSTC	26365	OBD
					- - - * - - -		
-123	129-0143-00			3	. INSULATOR,STDF:0.312 OD X 0.406" L,NYLON	80009	129-0143-00
					(ATTACHING PARTS FOR EACH)		
-124	211-0008-00			1	. SCREW,MACHINE:4-40 X 0.25 INCH,PNH STL	83385	OBD
					- - - * - - -		
-125	131-0773-00			1	. LEAD,ELECTRICAL:18.0 INCH LONG	01009	8111LF
-126	337-1538-01			1	. SHIELD,ELEC:	80009	337-1538-01
	343-0002-00			1	. CLAMP,LOOP:0.188 INCH DIA	95987	3-16-6B
-127	441-1192-00			1	CHASSIS,SCOPE:MAIN	80009	441-1192-00
					(ATTACHING PARTS)		
-128	211-0590-00			2	SCREW,MACHINE:6-32 X 0.25 INCH,PNH STL	83385	OBD
-129	210-0457-00			2	NUT,PLAIN,EXT W:6-32 X 0.312 INCH,STL	83385	OBD
					- - - * - - -		
	----- -----			-	. CHASSIS INCLUDES:		
-130	354-0205-01			1	. RTNR,ELECTRON T:	80009	354-0205-01
					(ATTACHING PARTS)		
-131	211-0507-00			4	. SCREW,MACHINE:6-32 X 0.312 INCH,PNH STL	83385	OBD
					- - - * - - -		
-132	343-0347-00			1	. RING,CLP,CRT RE:	80009	343-0347-00
					(ATTACHING PARTS)		
-133	211-0170-00			2	. SCREW,MACHINE:4-40 X 2.75 INCH,PNH STL	83385	OBD
-134	214-1333-00			2	. SPRING,HLCPS:0.213 OD X 0.375 INCH LONG	80009	214-1333-00
					- - - * - - -		
-135	----- -----			1	COIL:		
					(ATTACHING PARTS)		
-136	213-0138-00			2	SCR,TPG,THD FOR:4-40 X 0.188 INCH,PNH STL	83385	OBD
-137	343-0217-00			1	CLAMP,COIL:Y-AXIS	80009	343-0217-00
					- - - * - - -		
	342-0182-00			1	INSULATOR:CRT SHIELD	80009	342-0182-00
	342-0184-00			1	INSULATOR:CRT FRONT	80009	342-0184-00
-138	337-1531-00			1	SHIELD,CRT:	80009	337-1531-00
-139	378-0041-01			1	FIL ELEM AIR:OILED	80009	378-0041-01
-140	386-2401-02			1	PANEL,REAR:	80009	386-2401-02
					(ATTACHING PARTS)		
-141	211-0565-00			4	SCREW,MACHINE:6-32 X 0.250 INCH,TRH STL	83385	OBD
-142	211-0538-00			4	SCREW,MACHINE:6-32 X 0.312"100 DEG,FLH STL	83385	OBD
					- - - * - - -		
-143	358-0025-00			1	BSHG,STRAIN RLF:	28520	SR6P4
-144	161-0033-09			1	CABLE ASSY,PWR:3 WIRE,92 INCH LONG	16428	KH8035
	162-0512-00	XB141879		FT	INS SLV,ELEC:#10 YELLOW,0.104 FEET LONG	80009	162-0512-00
-145	131-0955-00			6	CONNECTOR,RCPT,:BNC,FEMALE	24931	28JR200-1
					(ATTACHING PARTS FOR EACH)		
-146	210-0255-00			1	TERMINAL,LUG:0.391" ID INT TOOTH	80009	210-0255-00
					- - - * - - -		
-147	352-0076-00			1	FUSEHOLDER:W/HARDWARE	75915	342012
-148	200-1388-00	B010100	B111234	1	COVER,FUSE:	80009	200-1388-00
	200-1388-01	B111235		1	COVER,FUSE:	80009	200-1388-01
					- - - * - - -		
-149	210-0204-00			1	TERMINAL,LUG:0.146 INCH DIA DE,45 DEG BEND	78189	2157-06-01-2520N
	210-0202-00	XB111080		1	TERMINAL,LUG:SE #6	78189	2104-06-00-2520N
					(ATTACHING PARTS)		
-150	211-0504-00	B010100	B111079	1	SCREW,MACHINE:6-32 X 0.25 INCH,PNH STL	83385	OBD
	211-0507-00	B111080		1	SCREW,MACHINE:6-32 X 0.312 INCH,PNH STL	83385	OBD
-151	210-0407-00	B010100	B111079	1	NUT,PLAIN,HEX.:6-32 X 0.25 INCH,BRS	73743	3038-0228-402
	210-0407-00	B111080		2	NUT,PLAIN,HEX.:6-32 X 0.25 INCH,BRS	73743	3038-0228-402
					- - - * - - -		

http://manuals.tektronix.com

Fig. & Index No.	Tektronix Part No.	Serial/Model No. Eff	Dscont	Qty	1 2 3 4 5 Name & Description	Mfr Code	Mfr Part Number
4-152	346-0077-00			1	STRAP,TIEDOWN E:	80009	346-0077-00
-153	----- -----			1	CKT BOARD ASSY:OUTPUT SIGNALS(SEE A7 EPL)		
					(ATTACHING PARTS)		
-154	211-0008-00			2	SCREW,MACHINE:4-40 X 0.25 INCH,PNH STL	83385	OBD
					- - - * - - -		
	----- -----			-	. CKT BOARD ASSY INCLUDES:		
-155	131-0608-00			10	. CONTACT,ELEC:0.365 INCH LONG	22526	47357
-156	131-1003-00			2	. CONNECTOR BODY,:CKT BD MT,3 PRONG	80009	131-1003-00
-157	136-0252-01			2	. CONTACT,ELEC:0.178 INCH LONG	00779	1-332095-2
	136-0252-04	B010100	B010324	27	. CONTACT,ELEC:0.188 INCH LONG	22526	75060
	136-0350-00	B010325		9	. SOCKET,PLUG-IN:3 PIN,LOW PROFILE	80009	136-0350-00
-158	214-0579-00			1	. TERM.,TEST PT:0.40 INCH LONG	80009	214-0579-00
-159	260-0984-00			1	. SWITCH,SLIDE:DP3POSN,0.5A,125VAC-DC	79727	G-128SPC/7140
-160	119-0390-00			1	FAN,AXIAL:46 CFM,19W,115 VAC,60 HZ	28875	MBS-2107F-0-1
					(ATTACHING PARTS)		
	210-0586-00			4	NUT,PLAIN,EXT W:4-40 X 0.25 INCH,STL	78189	OBD
					- - - * - - -		
-161	386-2410-01			1	SUBPANEL,REAR:	80009	386-2410-01
					(ATTACHING PARTS)		
	211-0538-00			2	SCREW,MACHINE:6-32 X 0.312"100 DEG,FLH STL	83385	OBD
-162	211-0504-00			2	SCREW,MACHINE:6-32 X 0.25 INCH,PNH STL	83385	OBD
-163	211-0008-00			1	SCREW,MACHINE:4-40 X 0.25 INCH,PNH STL	83385	OBD
-164	213-0088-00			1	SCR,TPG,THD CTG:4-24 X 0.25 INCH,PNH STL	83385	OBD
					- - - * - - -		
-165	175-1091-00			1	CABLE,SP,ELEC:	80009	175-1091-00
	614-0077-05			1	POWER SUPPLY:LOW VOLTAGE	80009	614-0077-05
					(ATTACHING PARTS)		
	212-0040-00			6	SCREW,MACHINE:8-32 X 0.375 100 DEG,FLH STL	83385	OBD
					- - - * - - -		
	----- -----			-	. POWER SUPPLY INCLUDES:		
-166	----- -----			1	. CKT BOARD ASSY:RECTIFIER(SEE A11 EPL)		
					(ATTACHING PARTS)		
-167	211-0511-00			2	. SCREW,MACHINE:6-32 X 0.50 INCH,PNH STL	83385	OBD
-168	210-0863-00			1	. WSHR,LOOP CLAMP:FOR 0.50" WIDE CLAMP,STL	95987	C191
-169	343-0004-00			1	. CLAMP,LOOP:0.312 INCH DIAMETER,PLSTC	95987	5-16-6B
-170	211-0507-00			2	. SCREW,MACHINE:6-32 X 0.312 INCH,PNH STL	83385	OBD
-171	210-0202-00			1	. TERMINAL,LUG:SE #6	78189	2104-06-00-2520N
					- - - * - - -		
	----- -----			-	. . CKT BOARD ASSY INCLUDES:		
-172	131-0608-00			31	. . CONTACT,ELEC:0.365 INCH LONG	22526	47357
-173	136-0252-04	B010100	B010324	6	. . CONTACT,ELEC:0.188 INCH LONG	22526	75060
	136-0350-00	B010325		2	. . SOCKET,PLUG-IN:3 PIN,LOW PROFILE	80009	136-0350-00
-174	214-1731-01			1	. . HEAT SINK,ELEC:TRANSISTOR:TRANSISTOR	80009	214-1731-01
					(ATTACHING PARTS)		
-175	211-0012-00			1	. . SCREW,MACHINE:4-40 X 0.375 INCH,PNH STL	83385	OBD
-176	210-0935-00			1	. . WASHER,NONMETAL:FIBER,0.14 IDX 0.375"OD	74921	OBD
-177	210-0586-00			1	. . NUT,PLAIN,EXT W:4-40 X 0.25 INCH,STL	78189	OBD
					- - - * - - -		
-178	214-1292-00			2	. . HEAT SINK,ELEC:TRANSISTOR	05820	205-AB
-179	344-0154-00			4	. . CLIP,ELECTRICAL:FOR 0.25 INCH DIA FUSE	80009	344-0154-00
-180	----- -----			1	. SW,THERMOSTATIC:(SEE S1000 EPL)		
					(ATTACHING PARTS)		
-181	211-0008-00			2	. SCREW,MACHINE:4-40 X 0.25 INCH,PNH STL	83385	OBD
-182	210-0586-00			2	. NUT,PLAIN,EXT W:4-40 X 0.25 INCH,STL	78189	OBD
					- - - * - - -		
-183	----- -----			1	. TRANSFORMER:(SEE T801 EPL)		
					(ATTACHING PARTS)		
-184	212-0522-00			2	. SCREW,MACHINE:10-32 X 2.50",HEX HD STL	83385	OBD
-185	210-0812-00			2	. WASHER,NONMETAL:#10,FIBER	06982	OBD
-186	166-0457-00			2	. INSUL SLVG,ELEC:0.19 ID X 1.875"LONG MYLAR	80009	166-0457-00
-187	212-0023-00			2	. SCREW,MACHINE:8-32 X 0.375 INCH,PNH STL	83385	OBD
-188	210-0804-00			2	. WASHER,FLAT:0.17 ID X 0.375 INCH OD,STL	12327	OBD
-189	407-0921-00			1	. BRKT,XFMR MTG:	80009	407-0921-00
					- - - * - - -		

http://manuals.hvac.com

Fig. & Index No.	Tektronix Part No.	Serial/Model No. Eff	Dscont	Qty	1 2 3 4 5 Name & Description	Mfr Code	Mfr Part Number
4-190	441-0993-01			1	. CHAS,ELEK EQPT:	80009	441-0993-01
-191	407-0973-00			1	BRACKET,CONN:	80009	407-0973-00
					(ATTACHING PARTS)		
	211-0504-00			2	SCREW,MACHINE:6-32 X 0.25 INCH,PNH STL	83385	OBD
					- - - * - - -		
-192	----- -----			1	CKT BOARD ASSY:LOGIC(SEE A2 EPL)		
	----- -----			-	. CKT BOARD ASSY INCLUDES:		
-193	131-0566-00			1	. LINK,TERM.CONNE:0.086 DIA X 2.375 INCH L	0000C	L-2007-1
-194	136-0235-00			1	. SOCKET,PLUG-IN:6 CONTACT,ROUND	71785	133-96-12-062
-195	136-0252-04	B010100	B010324	24	. CONTACT,ELEC:0.188 INCH LONG	22526	75060
	136-0350-00	B010325		8	. SOCKET,PLUG-IN:3 PIN,LOW PROFILE	80009	136-0350-00
-196	136-0260-02			1	. SOCKET,PLUG-IN:16 CONTACT,LOW CLEARANCE	01295	C931602
-197	136-0263-03	B010100	B131579	33	. CONTACT,ELEC:FOR 0.025 INCH SQUARE PIN	00779	86250-2
	136-0263-04	B131580		33	. CONTACT,ELEC:FOR 0.025 INCH SQUARE PIN	22526	75377-001
-198	136-0269-02			3	. SOCKET,PLUG-IN:14 CONTACT,LOW CLEARANCE	01295	C931402
-199	214-0579-00			4	. TERM.,TEST PT:0.40 INCH LONG	80009	214-0579-00
-200	----- -----			1	CKT BOARD ASSY:MAIN INTERFACE(SEE A1 EPL)		
					(ATTACHING PARTS)		
-201	213-0034-00			9	SCR,TPG,THD CTG:4-40 X 0.188 INCH,PNH STL	83385	OBD
					- - - * - - -		
	----- -----			-	. CKT BOARD ASSY INCLUDES:		
-202	131-0608-00			84	. CONTACT,ELEC:0.365 INCH LONG	22526	47357
	131-0592-00			24	. CONTACT,ELEC:0.885 INCH LONG	22526	47353
	131-0591-00			33	. CONTACT,ELEC:0.835 INCH LONG	22526	47352
	131-0589-00			4	. CONTACT,ELEC:0.46 INCH LONG	22526	47350
-203	129-0308-00			3	. POST,ELEC-MECH:HEX.,0.25 X 0.465 INCH LONG	80009	129-0308-00
					(ATTACHING PARTS)		
-204	211-0008-00			1	. SCREW,MACHINE:4-40 X 0.25 INCH,PNH STL	83385	OBD
					- - - * - - -		
-205	129-0308-00			1	. POST,ELEC-MECH:HEX.,0.25 X 0.465 INCH LONG	80009	129-0308-00
					(ATTACHING PARTS)		
	211-0008-00			1	. SCREW,MACHINE:4-40 X 0.25 INCH,PNH STL	83385	OBD
-206	210-0803-00			1	. WASHER,FLAT:0.15 ID X 0.375 INCH OD,STL	12327	OBD
					- - - * - - -		
-207	131-0804-00			1	. LINK,TERM.CONNE:J-SHAPE	80009	131-0804-00
-208	131-0805-00			2	. LINK,TERM.CONNE:J-SHAPE,0.90X0.82 X 0.312"	80009	131-0805-00
-209	131-1003-00			2	. CONNECTOR BODY,:CKT BD MT,3 PRONG	80009	131-1003-00
-210	136-0252-01			2	. CONTACT,ELEC:0.178 INCH LONG	00779	1-332095-2
	131-0767-08			2	. CONNECTOR,RCPT,:PLUG-IN CKT BD,70 CONTACT	80009	131-0767-08
					(ATTACHING PARTS FOR EACH)		
-211	213-0232-00			2	. SCR,TPG,THD FOR:2-32 X 0.312 INCH,PNH STL	83385	OBD
					- - - * - - -		
	----- -----			-	. . EACH CONNECTOR INCLUDES:		
-212	200-0950-00			2	. . COVER,ELEC CONN:PLASTIC	80009	200-0950-00
-213	131-0726-00			37	. . CONTACT,ELEC:STRAIGHT	80009	131-0726-00
-214	131-0727-00			37	. . CONTACT,ELEC:OFFSET	80009	131-0727-00
-215	204-0365-00			1	. . BODY,CONNECTOR:PLUG-IN CIRCUIT BOARD	80009	204-0365-00
	131-0767-07			1	. CONNECTOR,RCPT,:PLUG-IN CKT BD,70 CONTACT	80009	131-0767-07
					(ATTACHING PARTS)		
-216	213-0232-00			2	. SCR,TPG,THD FOR:2-32 X 0.312 INCH,PNH STL	83385	OBD
-217	210-0906-00			1	. WASHER,NONMETAL:FIBER,0.125 ID X 0.203"OD	86445	OBD
					- - - * - - -		
	----- -----			-	. . CONNECTOR INCLUDES:		
-218	200-0950-00			2	. . COVER,ELEC CONN:PLASTIC	80009	200-0950-00
-219	131-0726-00			35	. . CONTACT,ELEC:STRAIGHT	80009	131-0726-00
-220	131-0727-00			35	. . CONTACT,ELEC:OFFSET	80009	131-0727-00
-221	204-0365-02			1	. . BODY,CONNECTOR:PLUG-IN CIRCUIT BOARD	80009	204-0365-02
-222	----- -----			1	. CKT BOARD ASSY:(SEE A15 EPL)		
					(ATTACHING PARTS)		
-223	211-0008-00			2	. SCREW,MACHINE:4-40 X 0.25 INCH,PNH STL	83385	OBD
-224	351-0213-00			2	. GUIDE-POST,LOCK:0.285 INCH LONG	80009	351-0213-00
					- - - * - - -		
	----- -----			-	. . CKT BOARD ASSY INCLUDES:		
-225	131-0787-00			8	. . CONTACT,ELEC:0.64 INCH LONG	22526	47359

http://manuman.com

Fig. & Index No.	Tektronix Part No.	Serial/Model No. Eff	Dscont	Qty	1 2 3 4 5 Name & Description	Mfr Code	Mfr Part Number
4-226	344-0147-00			2	. CLIP,SPR,TNSN:CIRCUIT BOARD MOUNTING	80009	344-0147-00
					(ATTACHING PARTS FOR EACH)		
-227	210-0406-00			1	. NUT,PLAIN,HEX.:4-40 X 0.188 INCH,BRS	73743	2X12161-402
-228	210-0054-00			1	. WASHER,LOCK:SPLIT,0.118 ID X 0.212"OD STL	83385	OBD
-229	214-1568-00			1	. PIN,GUIDE:	80009	214-1568-00
					- - - * - - -		
-230	386-1558-00			2	. SPACER,CKT BD:PLASTIC	80009	386-1558-00
-231	214-0579-00			1	. TERM.,TEST PT:0.40 INCH LONG	80009	214-0579-00
-232	----- -----			1	CKT BOARD ASSY:VERTICAL INTERFACE(SEE A4 EPL)		
					(ATTACHING PARTS)		
-233	211-0008-00			2	SCREW,MACHINE:4-40 X 0.25 INCH,PNH STL	83385	OBD
					- - - * - - -		
	----- -----			-	. CKT BOARD ASSY INCLUDES:		
-234	136-0252-04	B010100	B010324	31	. CONTACT,ELEC:0.188 INCH LONG	22526	75060
	136-0252-04	B010325		22	. CONTACT,ELEC:0.188 INCH LONG	22526	75060
	136-0350-00	B010325		3	. SOCKET,PLUG-IN:3 PIN,LOW PROFILE	80009	136-0350-00
-235	136-0263-04			18	. CONTACT,ELEC:FOR 0.025 INCH SQUARE PIN	22526	75377-001
-236	----- -----			1	CKT BOARD ASSY:TRIGGER SELECT(SEE A3 EPL)		
					(ATTACHING PARTS)		
-237	211-0008-00			2	SCREW,MACHINE:4-40 X 0.25 INCH,PNH STL	83385	OBD
					- - - * - - -		
	----- -----			-	. CKT BOARD ASSY INCLUDES:		
	131-0589-00			4	. CONTACT,ELEC:0.46 INCH LONG	22526	47350
-238	136-0252-04	B010100	B010324	15	. CONTACT,ELEC:0.188 INCH LONG	22526	75060
	136-0350-00	B010325		5	. SOCKET,PLUG-IN:3 PIN,LOW PROFILE	80009	136-0350-00
-239	136-0260-02			1	. SOCKET,PLUG-IN:16 CONTACT,LOW CLEARANCE	01295	C931602
-240	136-0263-03	B010100	B131579	16	. CONTACT,ELEC:FOR 0.025 INCH SQUARE PIN	00779	86250-2
	136-0263-04	B131580		16	. CONTACT,ELEC:FOR 0.025 INCH SQUARE PIN	22526	75377-001
-241	131-0800-00			2	CONTACT,ELEC:PLUG-IN GROUND	80009	131-0800-00
					(ATTACHING PARTS FOR EACH)		
-242	211-0008-00			2	SCREW,MACHINE:4-40 X 0.25 INCH,PNH STL	83385	OBD
-243	210-0586-00			2	NUT,PLAIN,EXT W:4-40 X 0.25 INCH,STL	78189	OBD
					- - - * - - -		
-244	131-0930-00			2	CONTACT,ELEC:PLUG-IN GROUND	80009	131-0930-00
					(ATTACHING PARTS FOR EACH)		
-245	211-0008-00			1	SCREW,MACHINE:4-40 X 0.25 INCH,PNH STL	83385	OBD
-246	210-0586-00			1	NUT,PLAIN,EXT W:4-40 X 0.25 INCH,STL	78189	OBD
					- - - * - - -		
-247	131-0799-00			2	CONTACT,ELEC:	80009	131-0799-00
					(ATTACHING PARTS FOR EACH)		
-248	211-0008-00			1	SCREW,MACHINE:4-40 X 0.25 INCH,PNH STL	83385	OBD
-249	210-0586-00			1	NUT,PLAIN,EXT W:4-40 X 0.25 INCH,STL	78189	OBD
					- - - * - - -		
-250	351-0179-00			1	GUIDE,CKT CARD:6.75 INCH LONG,PLASTIC	80009	351-0179-00
					(ATTACHING PARTS)		
	211-0101-00			2	SCREW,MACHINE:4-40 X 0.25" 100 DEG,FLH STL	83385	OBD
					- - - * - - -		

http://manuals.tektronix.com

TEKTRONIX®
committed to technical excellence

MANUAL CHANGE INFORMATION

PRODUCT See below

CHANGE REFERENCE M24,381

DATE 3-5-76

CHANGE:	DESCRIPTION

7313 EFF SN B250000-up (070-1363-00)

7603 EFF SN B310000-up (070-1429-00)

7613 EFF SN B330000-up (070-1463-00)

7623A EFF SN B140000-up (070-1685-00)

7633 EFF SN B160000-up (070-1767-00)

ELECTRICAL PARTS LIST AND SCHEMATIC CHANGE

CHANGE TO:

Q872	151-0407-00	TRANSISTOR:SILICON,NPN,150V
R957	315-0510-00	RES.,FXD,CMPSN:51 OHM,5%,0.25W

The above parts are shown on the LV POWER SUPPLY diagram.

http://manoman.sqpll.com

TEKTRONIX®
committed to technical excellence

MANUAL CHANGE INFORMATION

PRODUCT 7623A & 7633

CHANGE REFERENCE M24,950

DATE 3-24-76

CHANGE:	DESCRIPTION

EFF SN B140000-up (7623A/R) 070-1685-00

EFF SN B160000-up (7633/R) 070-1767-00

ELECTRICAL PARTS LIST AND SCHEMATIC CHANGE

CHANGE TO:

R1651	315-0304-00	RES.,FXD,CMPSN:300K OHM,5%,0.25W

R1651 is shown on diagram 10 and is located on the STORAGE circuit board.

http://manoman.sqhill.com

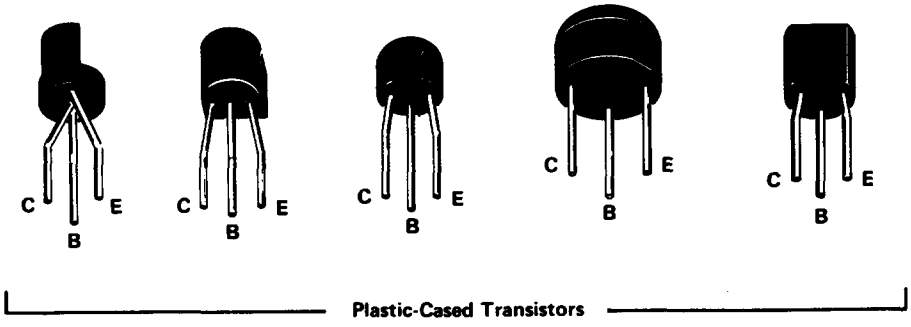

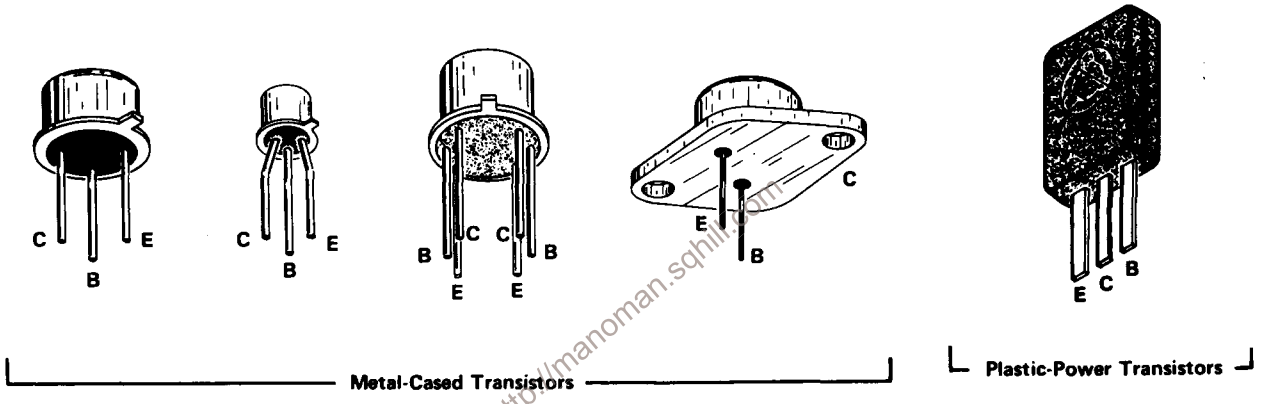

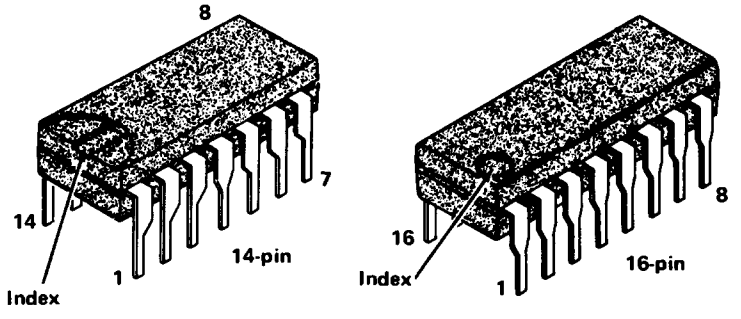

Figure 8-1. Semiconductor Lead configurations.

DIAGRAMS AND CIRCUIT BOARD ILLUSTRATIONS

Symbols and Reference Designators

Electrical components shown on the diagrams are in the following units unless noted otherwise:

Capacitors = Values one or greater are in picofarads (pF).
Values less than one are in microfarads (μF).
Resistors = Ohms (Ω).

Symbols used on the diagrams are based on USA Standard Y32.2-1967.

Logic symbology is based on MIL-STD-806B in terms of positive logic. Logic symbols depict the logic function performed and may differ from the manufacturer's data.

The following prefix letters are used as reference designators to identify components or assemblies on the diagrams.

A	Assembly, separable or repairable (circuit board, etc.)	H	Heat dissipating device (heat sink, heat radiator, etc.)	RT	Thermistor
AT	Attenuator, fixed or variable	HR	Heater	S	Switch
B	Motor	HY	Hybrid circuit	T	Transformer
BT	Battery	J	Connector, stationary portion	TC	Thermocouple
C	Capacitor, fixed or variable	K	Relay	TP	Test point
CB	Circuit breaker	L	Inductor, fixed or variable	U	Assembly, inseparable or non-repairable (integrated circuit, etc.)
CR	Diode, signal or rectifier	LR	Inductor/resistor combination	V	Electron tube
DL	Delay line	M	Meter	VR	Voltage regulator (zener diode, etc.)
DS	Indicating device (lamp)	P	Connector, movable portion	Y	Crystal
E	Spark Gap	Q	Transistor or silicon-controlled rectifier	Z	Phase shifter
F	Fuse	R	Resistor, fixed or variable		
FL	Filter				

http://manoman.sqhill.com

The following special symbols are used on the diagrams:

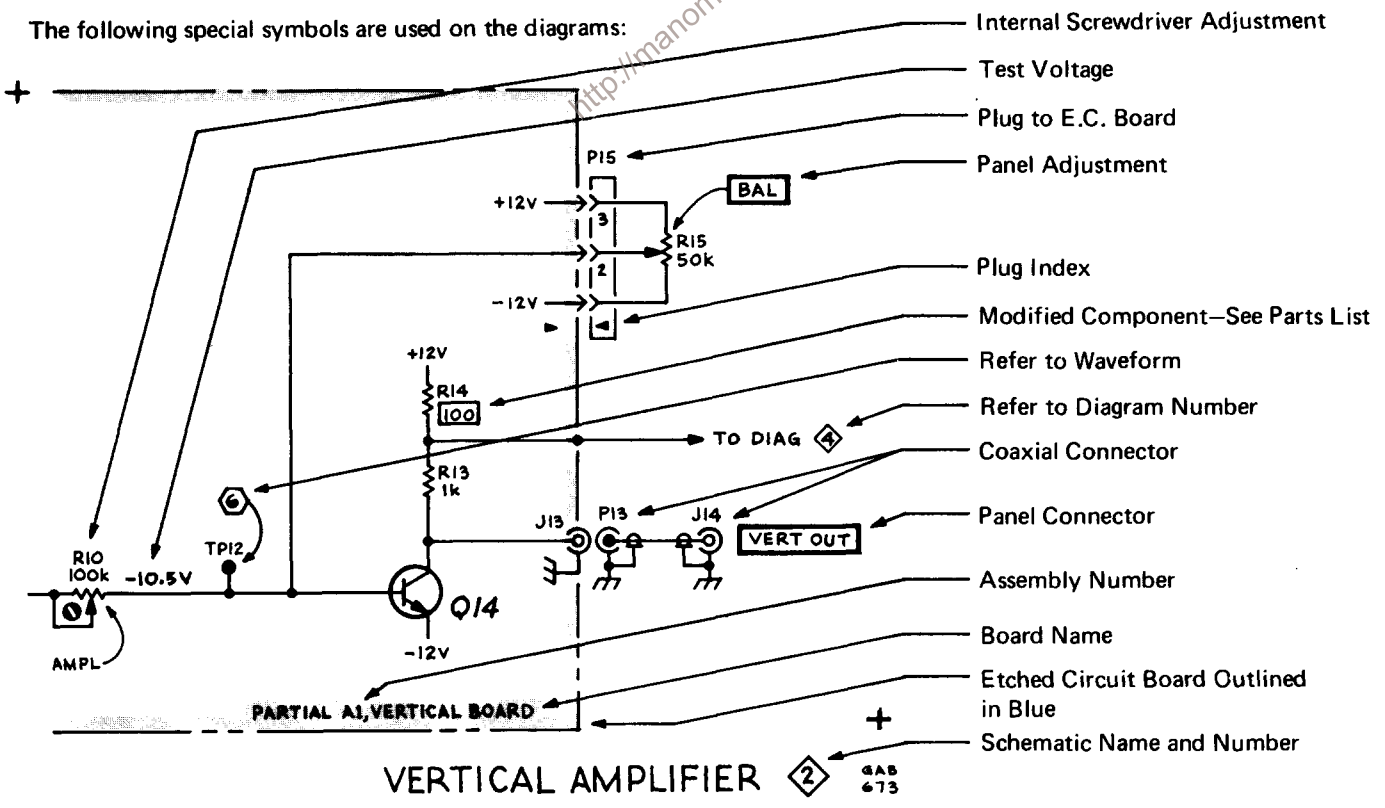

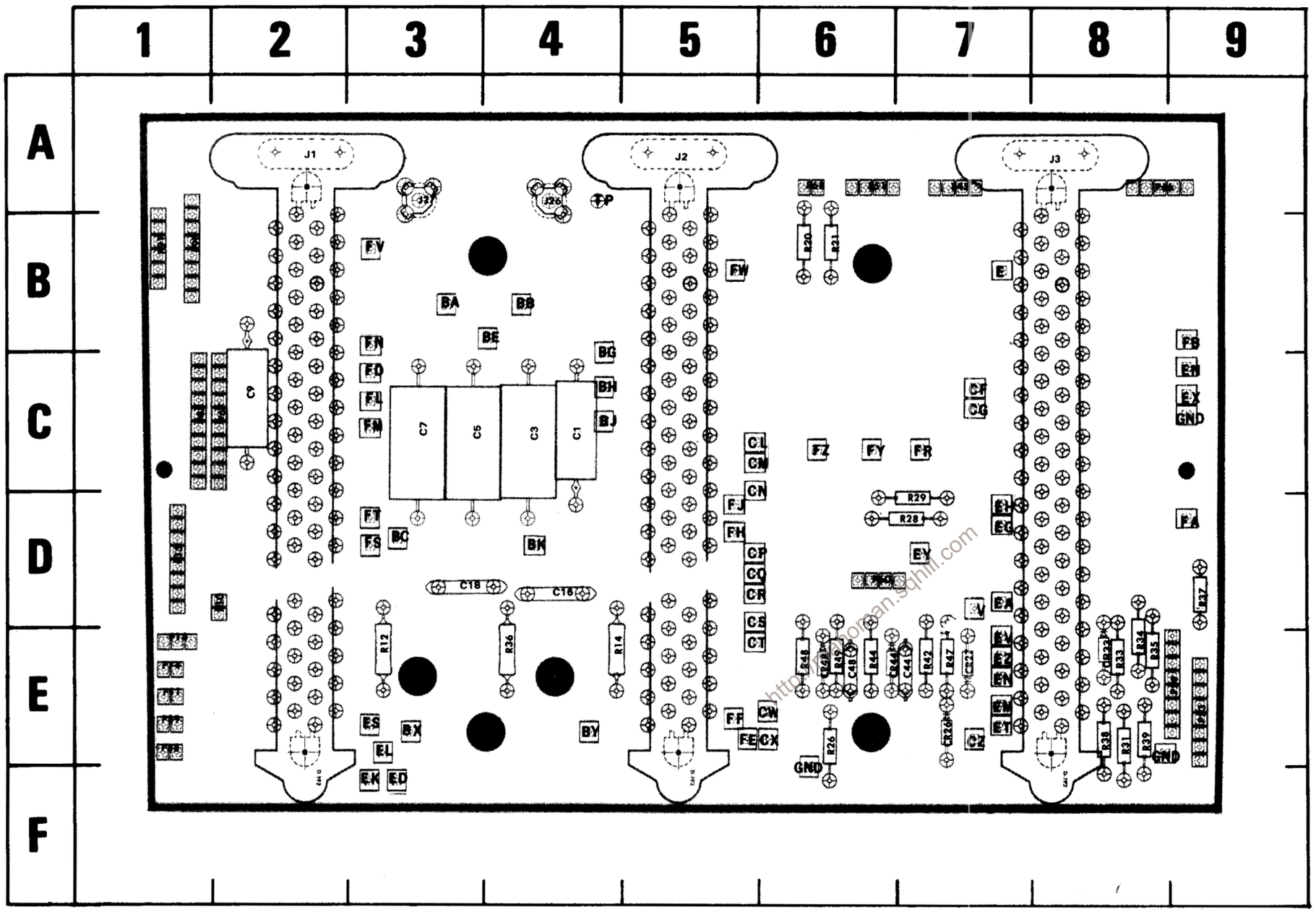

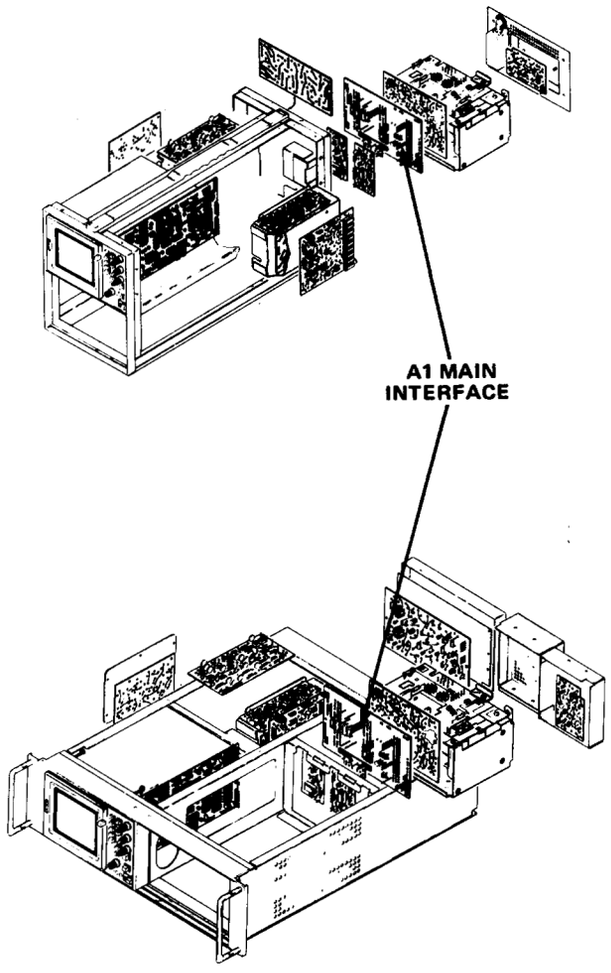

Figure 8-2. A1-Main Interface board.

CKT NO	GRID LOC	CKT NO	GRID LOC	CKT NO	GRID LOC	CKT NO	GRID LOC	CKT NO	GRID LOC
C1	4C	CR33	8E	P12	1E	P68	6A	R31	8E
C3	4C	CR44	6E	P13	1D	P74	1E	R33	8E
C5	3C	CR48	6E	P38	1E	P90	1B	R34	8E
C7	3C			P39	1E	P91	1B	R35	8E
C9	2C	J1	2A	P45	7A			R36	4E
C16	4D	J2	5A	P51	6A	R12	3E	R37	9D
C18	3D	J3	8A	P53	9E	R14	4E	R38	8E
C44	7E	J26	4A	P59	9E	R20	6B	R39	8E
C48	6E	J27	3A	P60	6D	R21	6B	R42	7E
				P65	1C	R26	6E	R44	6E
CR26	7E	P10	2D	P66	8A	R28	7D	R47	7E
CR27	7E	P11	1E	P67	2C	R29	7D	R48	6E
								R49	6E

Ⓐ

J1 (LEFT VERT) A B — TO P2165 DIAG — P65 — J2 (RIGHT VERT) A B — FROM P2167 DIAG — P67 — (HORIZ) J3 A B — TO P2166 DIAG — P66

ANALOG DATA
CH2 { COLUMN, ROW }
CH1 { COLUMN, ROW }

FORCE READOUT PLUG-IN MODE

TIME SLOT PULSES 2 1 4 3 6 5 8 7 10 9

T-S 1 T-S 2 T-S 3 T-S 4 T-S 5 T-S 6 T-S 7 T-S 8 T-S 9 T-S 10

TO PIN FV LOGIC — TO PIN FW LOGIC

R20 10K — P68 PIN 9 — TO P2166 DIAG
R21 10K — P68 PIN 10

SEE PARTS LIST FOR EARLIER VALUES AND SERIAL NUMBER RANGES OF PARTS OUTLINED OR DEPICTED IN BLUE.

SEE TO 50Ω DELAY LINE — J26 J27

+ TRIGGER IN
- TRIGGER IN
+ 50V
- 50V
+ 15V
- 15V
AUX X AXIS
AUX Z AXIS COM
MF MODE INFO
AUX Y AXIS
SINGLE SWP LOGIC
SINGLE SWP RESET
LIGHTS COMMON

+ TRIGGER OUT
- TRIGGER OUT
GND
GND
SIGNAL (+)
SIGNAL (-)
SS READY INDICATOR
X-Y COMPENSATION
+5V LIGHTS
DELAY GATE
+5V DC
SWEEP LOCKOUT
INTENSITY LIMIT
MF CHAN SWITCH SIG
CHOP COMMON
ALT DRIVE
CHOP DRIVE
AUX SWEEP GATE
LINE TRIGGER
HOLDOFF
A SWEEP
B SWEEP
UTILITY COMMON

SWEEP GATE

+50V -50V +15V -15V — TO PIN FT, TO PIN FS } LOGIC — +5V

LOGIC { TO PIN FJ, TO PIN FH } — FROM P13-6

LOGIC { TO PIN EH, TO PIN EG } — +5V — TO PIN BG VERTICAL INTERFACE

FROM PIN CG, FROM PIN CF } TRIG SEL — +50V -50V +15V -15V

C18 .01 — +15V +5V -15V — SUPPORT POST

TO PIN CQ, TO PIN CP } TRIG SEL

TO PIN CL, TO PIN CM } TRIG SEL

TO VERTICAL INTERFACE SEE 4 — BS BP BN BT — BV BU BR BQ — BG BX BC — VERTICAL INTERCONNECT

FROM J3-B14 — C16 .01

X-Y HOLDOFF GATE TO P1409-6 — HOLDOFF GATE TO P1409-4 — SWEEP LOCKOUT FROM P1409-4 — SWP/AUX SWP GATE TO P1409-2 — P59B — P59A

R26 1.2K — R31 1.2K — TO PIN EM LOGIC — R39 1.5K — TO PIN ET LOGIC

R28 51 — R29 51 — P51 — TO P501 HORIZ AMP DIAG 5

P10 — P59 — DELAY GATE TO OUTPUT SIGNALS BOARD, P655-5,6 DIAG 6

+5V — TO PIN EV LOGIC — TO PIN EZ LOGIC — CR93 — R33 6.8K — -15V — R34 1.2K — R35 1.2K — R37 1.5K — AUX SWEEP GATE TO OUTPUT SIGNALS BOARD, P655-7,8 DIAG 6

R36 2.49K — SWEEP TO OUTPUT SIGNALS BOARD, P655-1,2 DIAG 6

R38 1.5K — SWEEP GATE TO OUTPUT SIGNALS BOARD, P655-3,4 DIAG 6

R12 4.99K — R14 4.99K

P90 — LINE TRIGGER — -50V -15V +5V +15V +50V — POWER FROM P400 DIAG 8

P91 — -50V C1 9μF -15V — C3 100μF +5V — C5 100μF +15V — C7 100μF +50V — C9 9μF — SENSE FEEDBACK VOLTAGE TO P401 DIAG 8

X/Y INHIBIT FROM P504 DIAG 5 — Z AXIS INHIBIT FROM J2139 DIAG 8 — P39 — P38

FROM J1 A13 B13 — FROM J2 A13 B13 — +15V +5V — CL CM CQ CP CV CS — TO TRIGGER SELECTOR SEE 3 — CT CG CF CR CN — CZ CX CW — -15V — A20 B20 TO J3

R47 24K — +5V — +15V R49 100K — R48 1.5K — CR48 — C48 0.1 — P45 — J1047 — EXT SS RESET IN

C44 0.1 — +15V R41 1M — R44 1.5K — CR44 — P1013 — P13 — +15V — P1023 — LOCATED ON CRT BEZEL — +15V CAMERA TRIGGER GND — P1024

PARTIAL A14 STORAGE BRD

VERT MODE ADD TO J2-A16 (PIN BK VERT INTERFACE

CR1021 — CR1024 — CR1026 — R1050 5.6 — R1022 30K — R1018 1K — R1019 1K — -15V

(PCPL) +5V

S1011 TRIG SOURCE: LEFT, VERT MODE, RIGHT

S1041 VERT MODE: LEFT, ALT, ADD, CHOP, RIGHT

P1013 — P1028 — POWER (ON) — DS1001 — +5V

READOUT LOCKOUT TO P2118 9 — SEE P1018 DIAG

J1050 EXT Z AXIS IN — P11 — EXT Z AXIS IN — COMMON

FROM J1 A17 B17 B35 — FROM J2 A17 B17 A35 — FROM J3 B4 A6 A1 A7 A17 B17

+5V +5V -15V — FB EW ED FA FT FS FV FJ FH FW FY EY FZ FR — FL FM FP FN — TO LOGIC BOARD SEE 2

COMMON — Z AXIS OUT — EL EK — FC FD EX EU — ES

A1 MAIN INTERFACE

P74 — TO P1101 CRT DIAG 7

P12 — -15V — INTENSITY — R102 5K — INTENSITY TO P1282-10 CRT DIAG 7

MAIN INTERFACE 1

REV. C, OCT. 1975

http://manuals.tghill.com

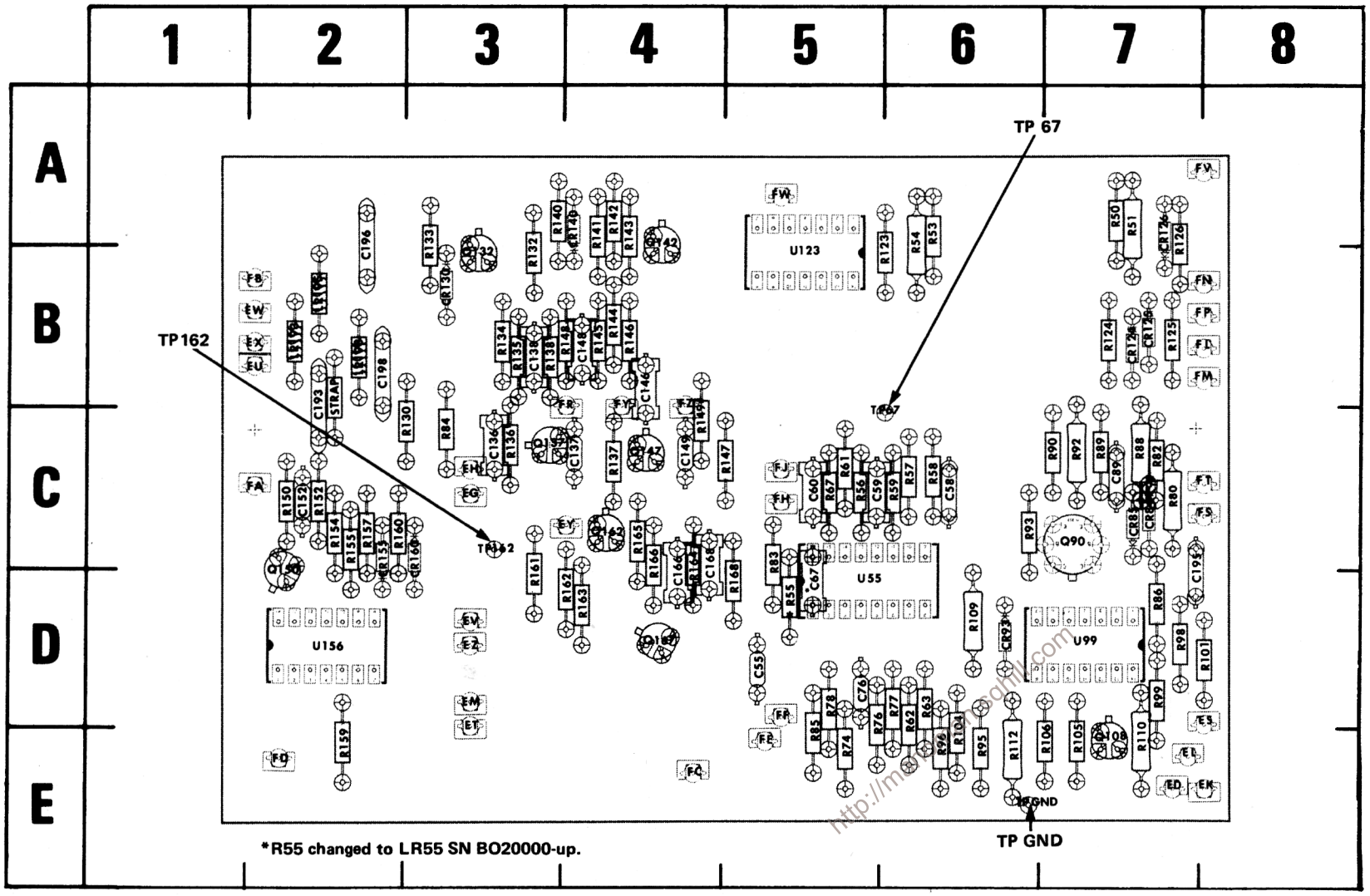

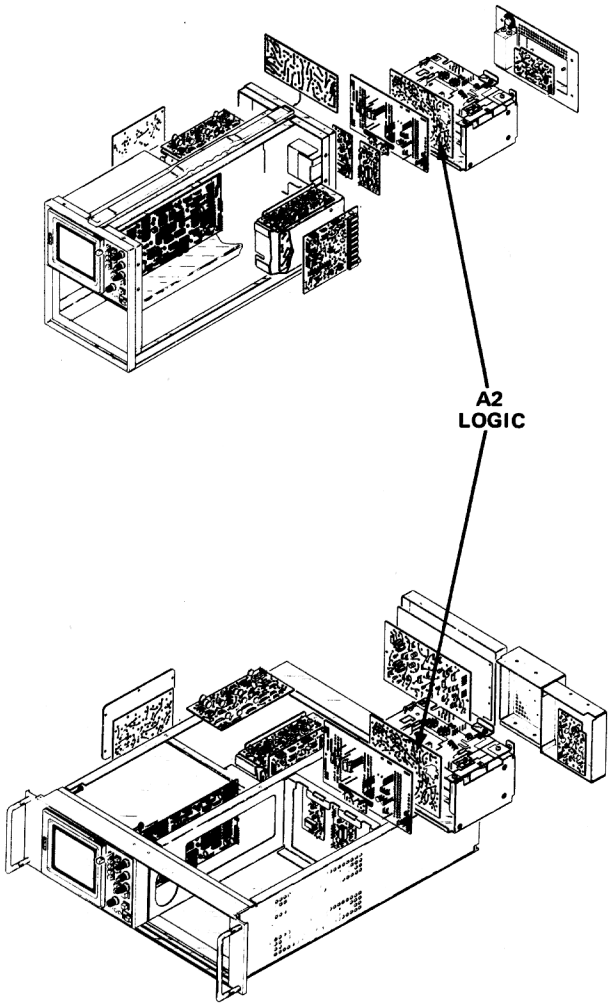

Figure 8-3. A2-Logic board.

CKT NO	GRID LOC	CKT NO	GRID LOC	CKT NO	GRID LOC	CKT NO	GRID LOC	CKT NO	GRID LOC	CKT NO	GRID LOC
C55	5D	CR85	7C	Q167	4D	R83	5C	R124	7B	R150	2C
C58	6C	CR93	6D			R84	3C	R125	7B	R152	2C
C59	5C	CR124	7B	R50	7A	R85	5E	R126	7A	R154	2C
C60	5C	CR125	7B	R51	7A	R86	7D	R130	3C	R155	2C
C67	5D	CR126	7A	R53	6A	R88	7C	R132	3B	R157	2C
C76	5D	CR130	3B	R54	6A	R89	7C	R133	3A	R159	2E
C89	7C	CR140	4A	R55	5D	R90	7C	R134	3B	R160	2C
C136	3C	CR155	2C	R56	5C	R92	7C	R135	3B	R161	3C
C137	4C	CR160	3C	R57	6C	R93	6C	R136	3C	R162	4D
C138	3B	LR55	5D	R58	6C	R95	6E	R137	4C	R163	4D
C146	4B	LR193	2B	R59	6C	R96	6E	R138	3B	R164	4C
C148	4B	LR195	2B	R61	5C	R98	7D	R140	3A	R165	4C
C149	4C	LR198	2B	R62	6D	R99	7D	R145	4B	R166	4C
C152	2C	Q90	7C	R63	6D	R101	8D	R141	4A	R168	5D
C166	4C	Q108	7E	R67	5C	R104	6E	R142	4A	TP67	6C
C168	4C	Q132	3B	R74	5E	R105	7E	R143	4A	TP162	3C
C193	2B	Q137	3C	R76	5D	R106	7E	R144	4B		
C195	7C	Q142	4A	R77	6D	R109	6D	R146	4B	U55	5D
C196	2A	Q147	4C	R78	5D	R110	7E	R147	5C	U99	7D
C198	2B	Q150	2D	R80	7C	R112	6E	R148	4B	U123	5B
CR84	7C	Q162	4C	R82	7C	R123	6B	R149	4C	U156	2D

http://manuals.hpcalc.com

VOLTAGES AND WAVEFORMS

The voltages and waveforms shown on this diagram were obtained using the recommended test equipment and test set-ups listed below.

RECOMMENDED TEST EQUIPMENT

ITEM	SPECIFICATIONS		RECOMMENDED TYPE
Oscilloscope	Frequency response Deflection factor Input impedance Sweep rate	DC to 65 MHz 5 mV to 5 V/Div 10 MΩ, 20 pF 500 ns	Tektronix 7603 or 7613 equipped with 7A15A Amplifier and 7B53A Time-Base unit, or equivalent. A 7A13 Differential Comparator was used to obtain offset.
Probe	Fast rise 10X attenuation probe compatible with the vertical amplifier of the test oscilloscope.		Tektronix P6053B, or equivalent.
Voltmeter (Non-Loading Digital Multimeter)	Input impedance Range	10 MΩ 0 to 500 V	Tektronix 7D13 Digital Multimeter (test oscilloscope must have readout system) or Tektronix DM 501 Digital Multimeter with power module, or equivalent.

VOLTAGE MEASUREMENTS

Voltage measurements on this diagram were made under the following conditions:

Set front panel controls (knob type) to mid-range.
Set VERT MODE for CHOP.
Set TRIG SOURCE for VERT MODE.
Set for NON STORE condition.
No plug-in units are installed.
Voltmeter common is connected to chassis ground.

WAVEFORMS

Waveforms shown on this diagram were obtained under the following conditions:

7633 OSCILLOSCOPE UNDER TEST. Front panel controls are set the same as for voltage measurements. A 7A15A Amplifier unit and a 7B53A Time-Base unit are installed in the mainframe under test. The test oscilloscope 4 Volts calibrator signal is applied to the amplifier unit. The amplifier unit is set for 1 V/division deflection centered on the crt. The 7B53A is set for internal auto-trigger, 0.5 ms/division sweep rate.

TEST OSCILLOSCOPE. The test oscilloscope is externally triggered from the +GATE OUT (MAIN) of the 7633 mainframe under test. The test oscilloscope is dc coupled.

Tolerances of voltages and waveforms shown are 20%.

Ⓐ

http://manoman.shill.com

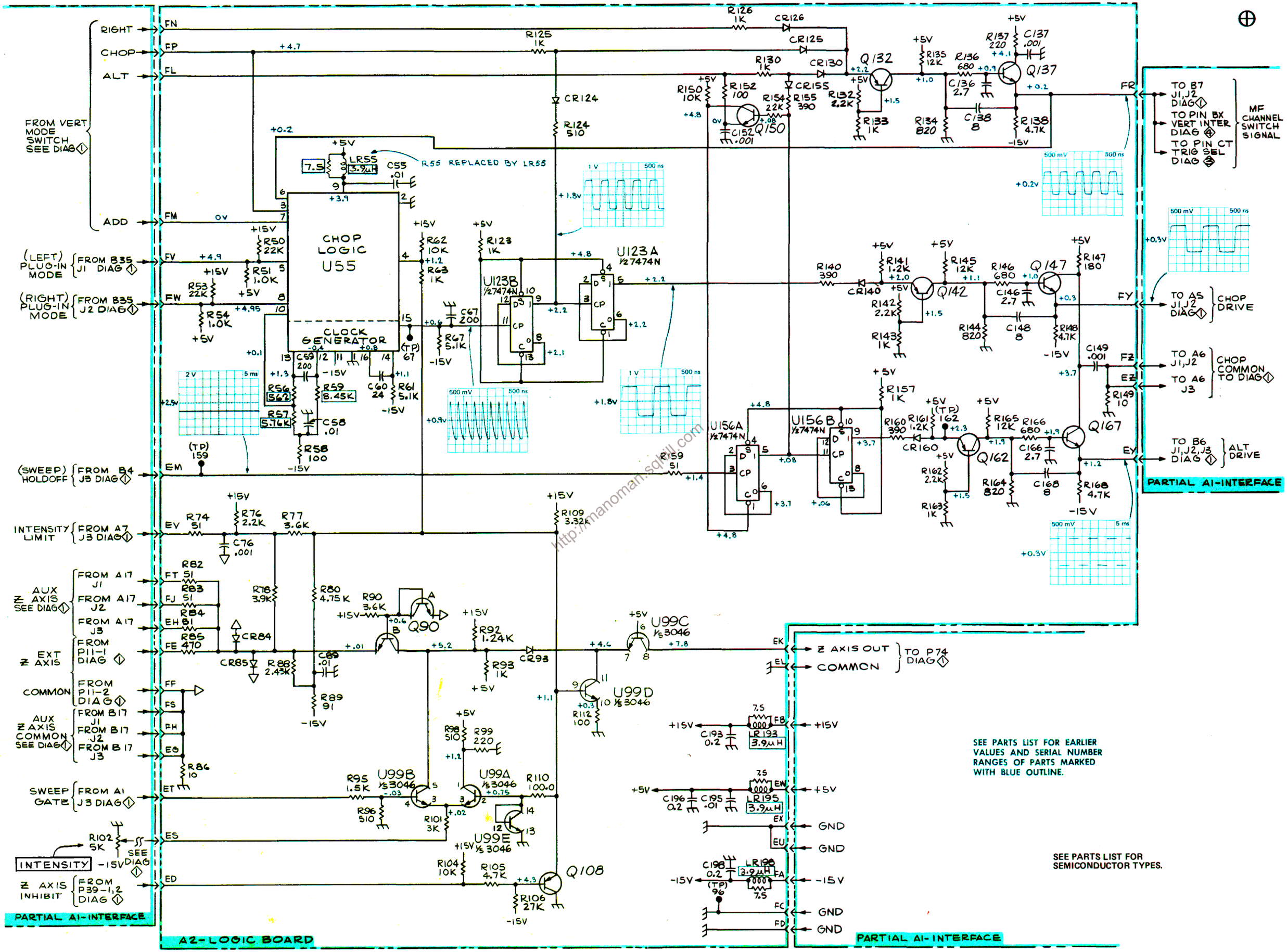

SEE PARTS LIST FOR EARLIER VALUES AND SERIAL NUMBER RANGES OF PARTS MARKED WITH BLUE OUTLINE.

SEE PARTS LIST FOR SEMICONDUCTOR TYPES.

http://manoman.sqhill.com

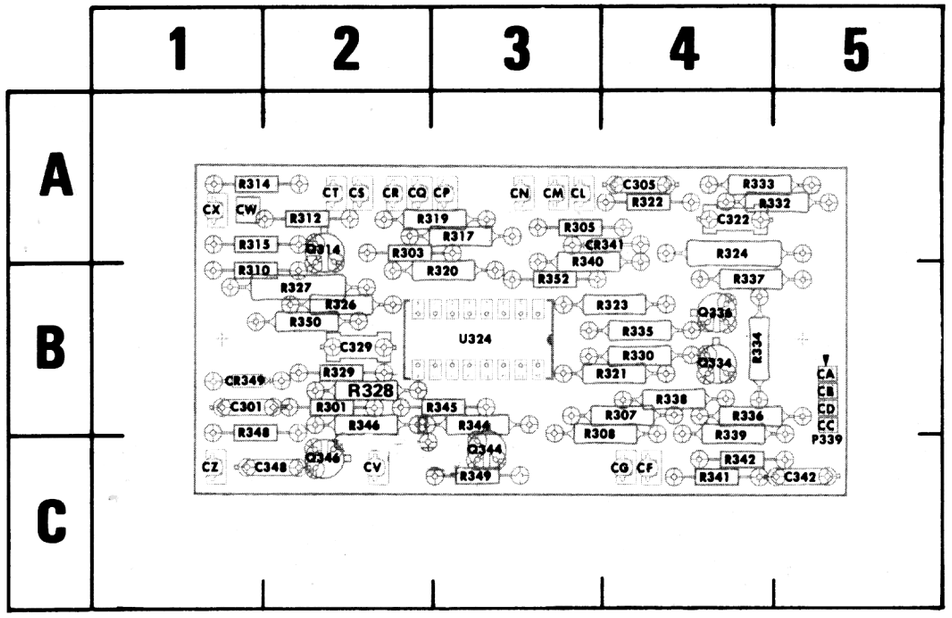

Figure 8-4. A3-Trigger Selector board.

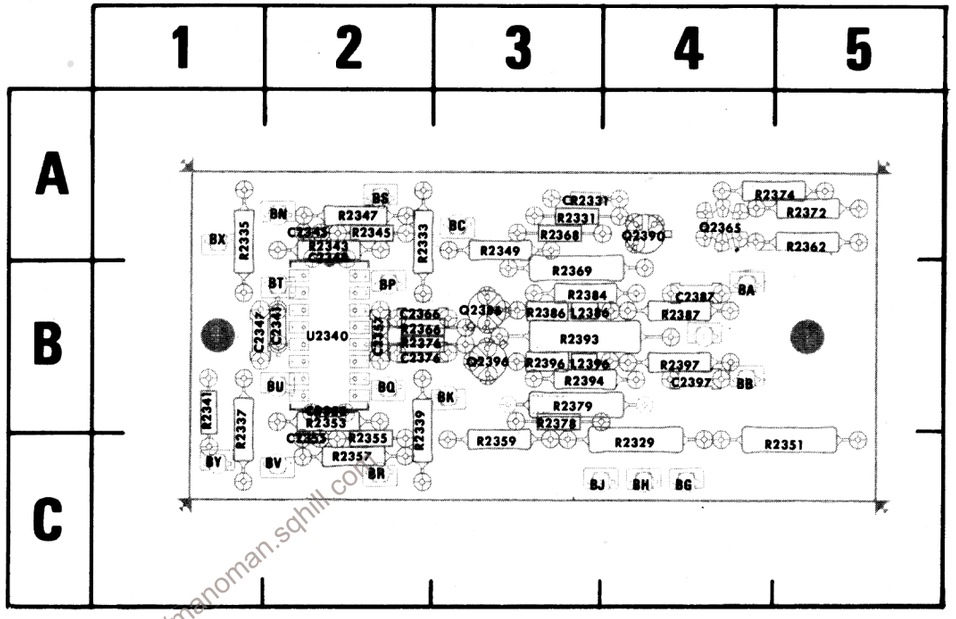

http://manoman.sqhll.com

Figure 8-5. A4-Vertical Interface board.

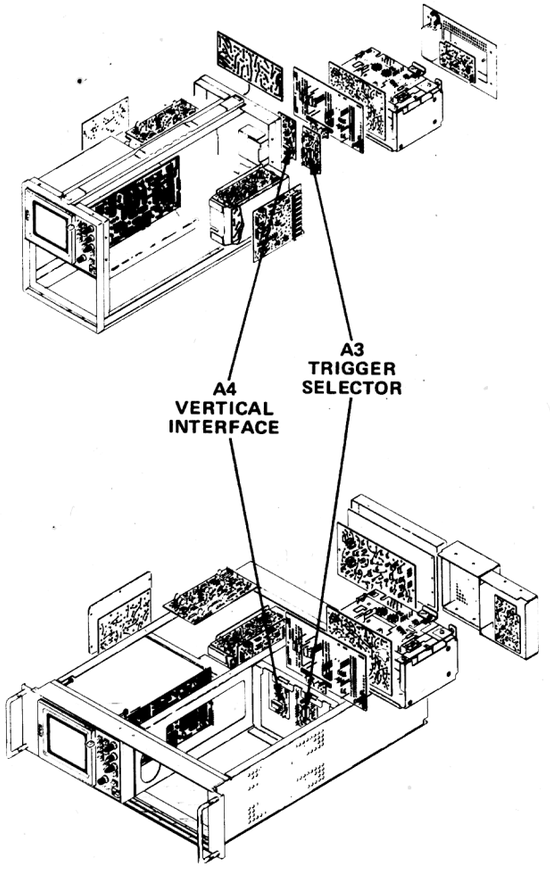

CKT NO	GRID LOC	CKT NO	GRID LOC	CKT NO	GRID LOC	CKT NO	GRID LOC
C301	1B	Q344	3C	R322	4A	R340	3A
C305	4A	Q346	2C	R323	4B	R341	4C
C322	4A			R324	4A	R342	4C
C329	2B	R301	2B	R326	2B	R344	3B
C342	5C	R303	2A	R327	2B	R345	3B
C348	2C	R305	3A	R328	2B	R346	2B
		R307	4B	R329	2B	R348	1B
		R308	3B	R330	4B	R349	3C
CR341	4A	R310	1B	R332	4A	R350	2B
CR349	1B	R312	2A	R333	4A	R352	3B
		R314	1A	R334	4B		
P339	5C	R315	1A	R335	4B	U324	3B
		R317	3A	R336	4B		
Q314	2A	R319	3A	R337	4B		
Q334	4B	R320	3B	R338	4B		
Q336	4B	R321	4B	R339	4B		

Ⓐ

CKT NO	GRID LOC	CKT NO	GRID LOC	CKT NO	GRID LOC	CKT NO	GRID LOC
C2341	2B	L2396	3B	R2347	2A	R2384	3B
C2345	2A			R2349	3A	R2386	3B
C2347	1B	Q2365	4A	R2351	5C	R2387	4B
C2348	2A	Q2396	3B	R2353	2B	R2393	3B
C2355	2C	Q2390	4A	R2355	2C	R2394	3B
C2357	2B	Q2396	3B	R2357	2C	R2396	3B
C2358	2B			R2359	3C	R2397	4B
C2366	2B	R2235	1A	R2362	5A		
C2376	2B	R2329	4C	R2366	2B	U2340	2B
C2387	4B	R2331	3A	R2368	3A		
C2397	4B	R2333	2A	R2369	3B		
		R2337	1B	R2372	5A		
		R2339	2B	R2375	5A		
CR2331	3A	R2341	1B	R2376	2B		
		R2343	2A	R2378	3B		
L2386	3B	R2345	2A	R2379	3B		

Ⓐ

VOLTAGES AND WAVEFORMS

The voltages and waveforms shown on this diagram were obtained using the recommended test equipment and test set-ups listed below.

RECOMMENDED TEST EQUIPMENT

ITEM	SPECIFICATIONS		RECOMMENDED TYPE
Oscilloscope	Frequency response Deflection factor Input impedance Sweep rate	DC to 65 MHz 5 mV to 5 V/Div 10 MΩ, 20 pF 500 ns	Tektronix 7603 or 7613 equipped with 7A15A Amplifier and 7B53A Time-Base unit, or equivalent. A 7A13 Differential Comparator was used to obtain offset.
Probe	Fast rise 10X attenuation probe compatible with the vertical amplifier of the test oscilloscope.		Tektronix P6053B, or equivalent.
Voltmeter (Non-Loading Digital Multimeter)	Input impedance Range	10 MΩ 0 to 500 V	Tektronix 7D13 Digital Multimeter (test oscilloscope must have readout system) or Tektronix DM 501 Digital Multimeter with power module, or equivalent.

VOLTAGE MEASUREMENTS

Voltage measurements on this diagram were made under the following conditions:

Set front panel controls (knob type) to mid-range.
Set VERT MODE for CHOP.
Set TRIG SOURCE for VERT MODE.
Set for NON STORE condition.
No plug-in units are installed.
Voltmeter common is connected to chassis ground.

WAVEFORMS

Waveforms shown on this diagram were obtained under the following conditions:

7633 OSCILLOSCOPE UNDER TEST. Front panel controls are set the same as for voltage measurements. A 7A15A Amplifier unit and a 7B53A Time-Base unit are installed in the mainframe under test. The test oscilloscope 4 Volts calibrator signal is applied to the amplifier unit. The amplifier unit is set for 1 V/division deflection centered on the crt. The 7B53A is set for internal auto-trigger, 0.5 ms/division sweep rate.

TEST OSCILLOSCOPE. The test oscilloscope is externally triggered from the +GATE OUT (MAIN) of the 7633 mainframe under test. The test oscilloscope is dc coupled.

Tolerances of voltages and waveforms shown are 20%.

Ⓐ

http://manoman.skhill.com

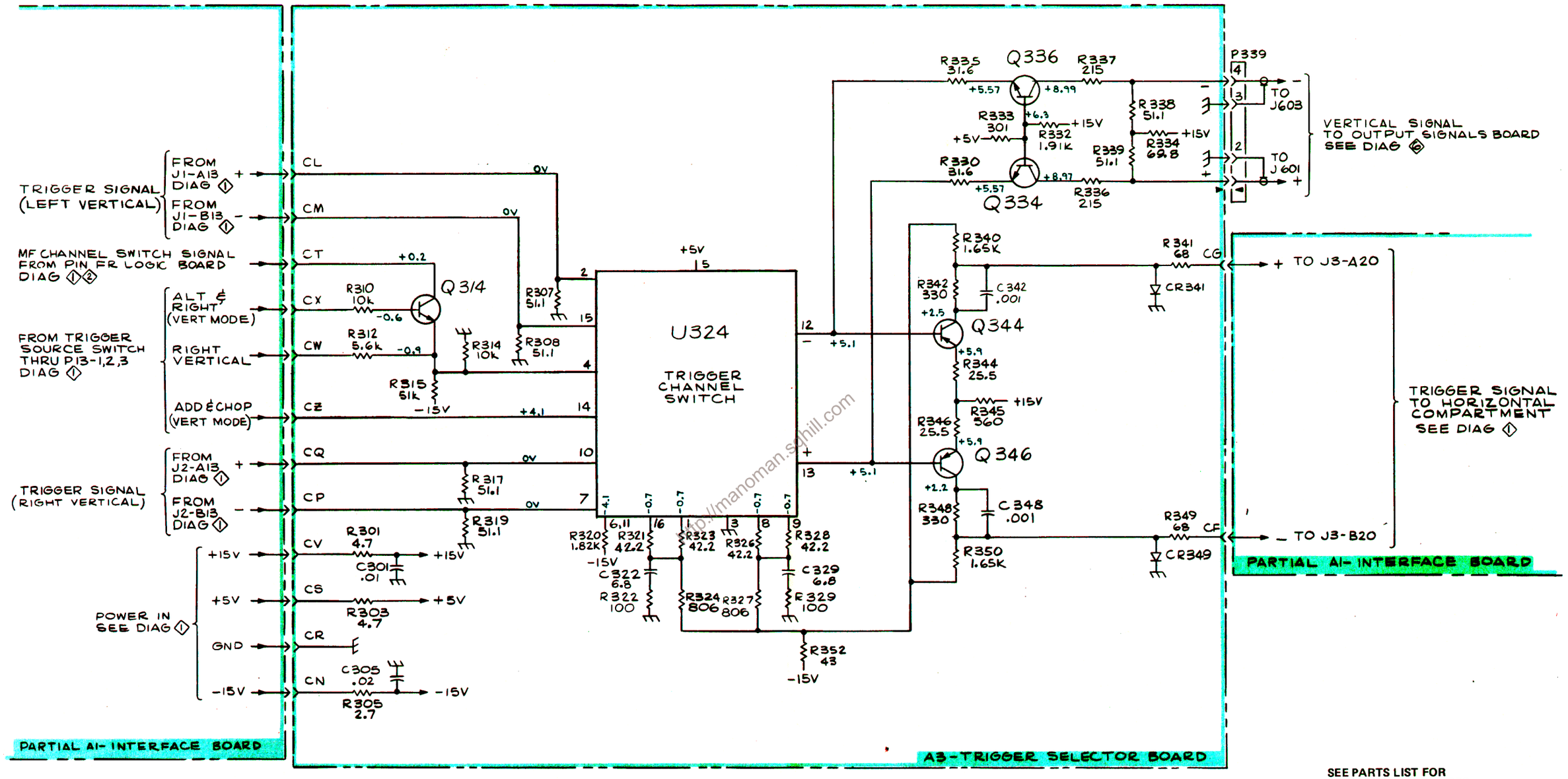

SEE PARTS LIST FOR SEMICONDUCTOR TYPES.

http://manoman.sqhill.com

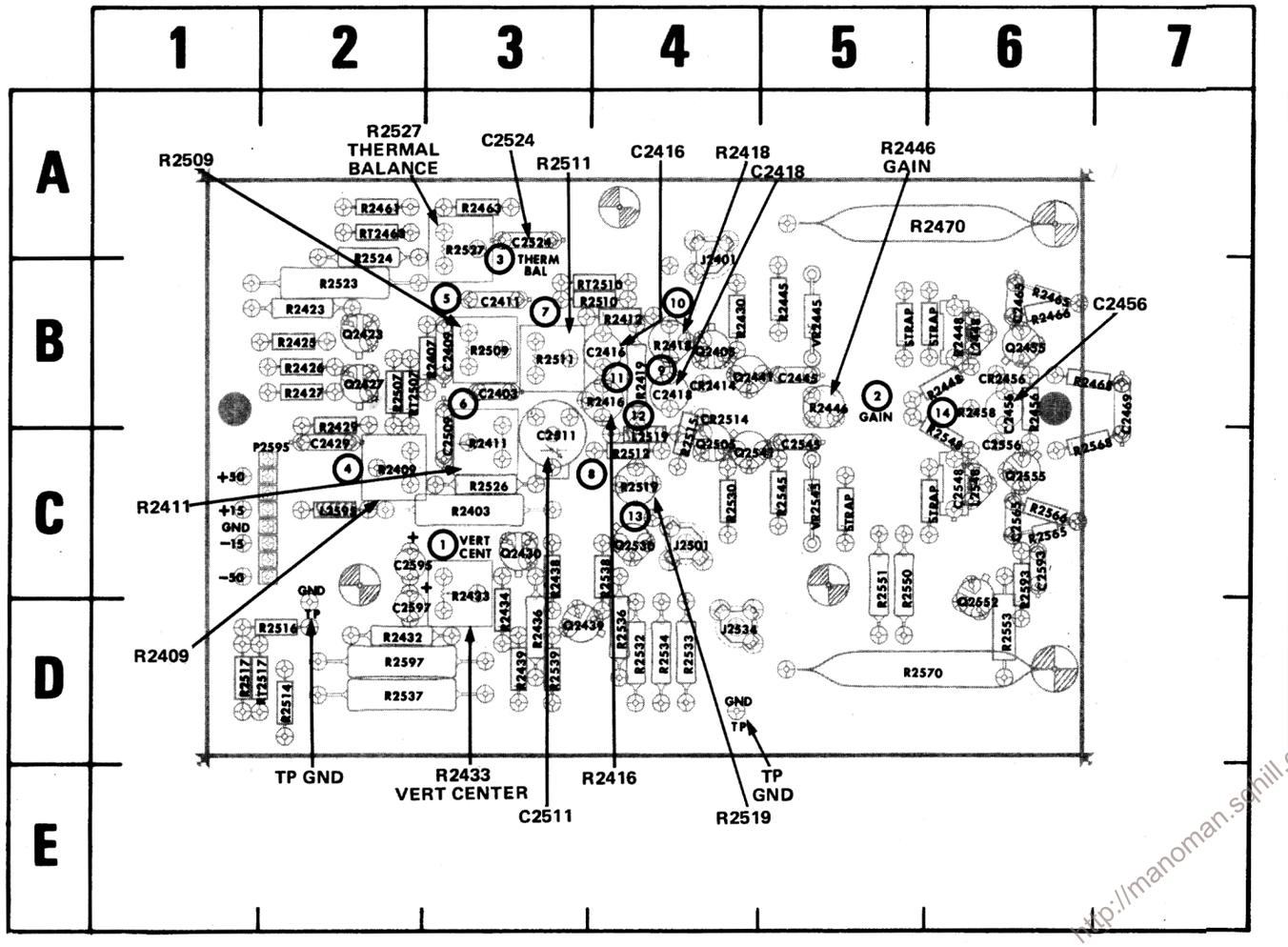

Figure 8-6. A5-Vertical Amplifier board (front).

CKT NO	GRID LOC	CKT NO	GRID LOC	CKT NO	GRID LOC	CKT NO	GRID LOC	CKT NO	GRID LOC	CKT NO	GRID LOC
C2403	3B	CR2414	4B	Q2455	6B	R2432	2D	R2512	4C	R2551	5C
C2409	3B	CR2456	6B	Q2505	4C	R2433	3C	R2514	2D	R2553	6D
C2411	3B	CR2514	4B	Q2530	4C	R2434	3D	R2515	4C	R2565	6C
C2416	4B			Q2541	4C	R2436	3D	R2516	2D	R2566	6C
C2418	4B	J2401	4A	Q2552	6D	R2438	3C	R2517	1D	R2568	7C
C2429	2C	J2501	4C	Q2555	6C	R2439	3D	R2519	4C	R2570	5D
C2445	5B	J2534	4D			R2445	5B	R2523	2B	R2593	6C
C2456	6B			R2403	3C	R2446	5B	R2524	2A	R2597	2D
C2465	6B	L2448	6B	R2407	3B	R2448	6B	R2526	3C		
C2469	7B	L2519	4C	R2409	2C	R2456	6B	R2527	3A	RT2463	2A
C2509	3C	L2548	6C	R2411	3C	R2458	6B	R2530	4C	RT2507	2B
C2511	3C	L2595	2C	R2412	4B	R2461	2A	R2532	4D	RT2510	4B
C2524	3A			R2416	4B	R2463	3A	R2533	4D	RT2517	2D
C2545	5C	P2595	2C	R2418	4B	R2465	6B	R2534	4D		
C2548	6C			R2419	4B	R2466	6B	R2536	4D	VR2445	5B
C2556	6C	Q2405	4B	R2423	2B	R2468	7B	R2537	2D	VR2545	5C
C2593	6C	Q2423	2B	R2425	2B	R2470	6A	R2538	4C		
C2595	2C	Q2427	2B	R2426	2B	R2507	2B	R2539	3D		
C2597	2D	Q2430	3C	R2427	2B	R2509	3B	R2545	5C		
C2665	6C	Q2439	3D	R2429	2B	R2510	4B	R2548	6C		
		Q2441	4B	R2430	4B	R2511	3B	R2550	5C		

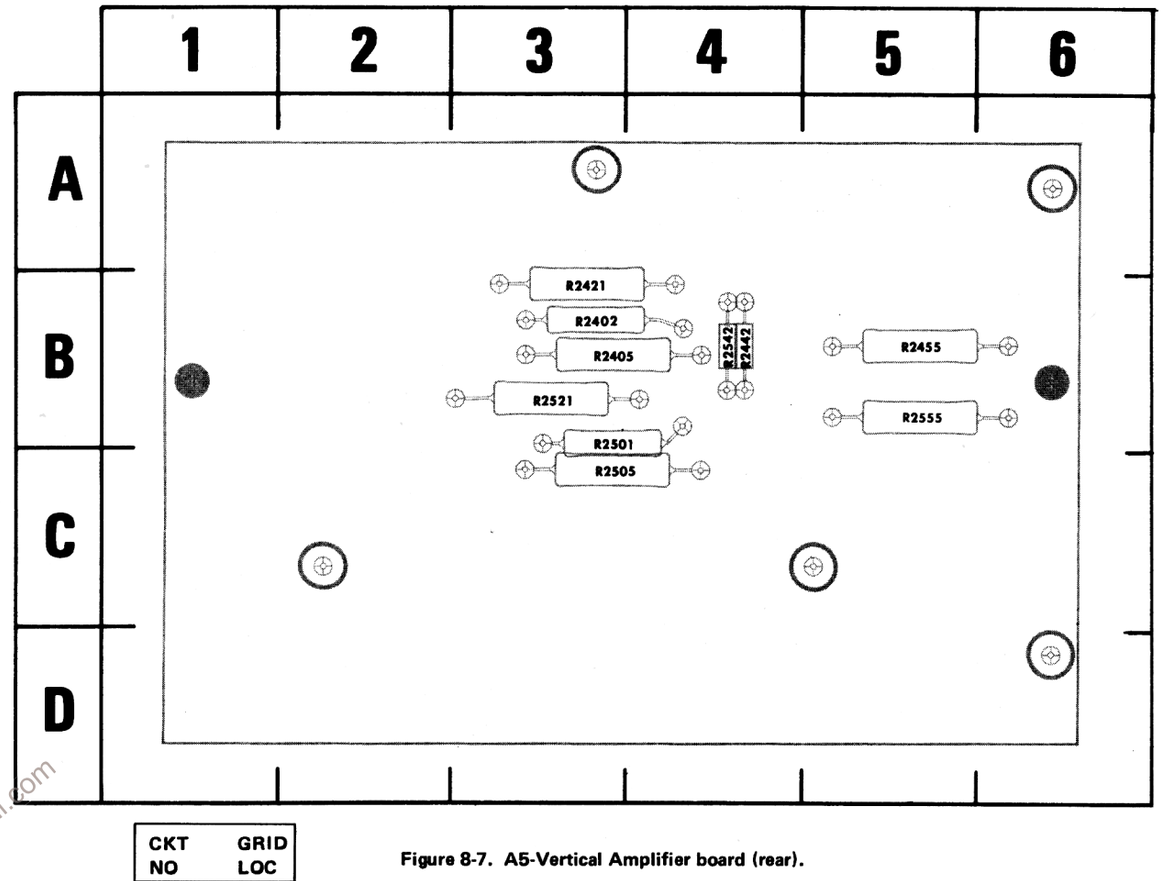

Figure 8-7. A5-Vertical Amplifier board (rear).

CKT NO	GRID LOC
R2402	3B
R2405	3B
R2421	3B
R2442	4B
R2455	5B
R2501	3C
R2505	3B
R2521	3B
R2542	4B
R2555	5B

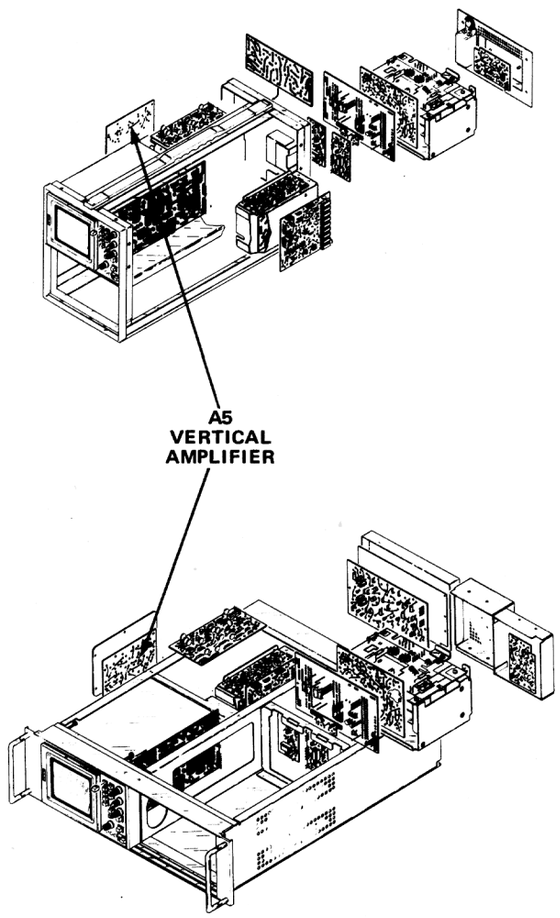

http://manoman.sqhill.com

VOLTAGES AND WAVEFORMS

The voltages and waveforms shown on this diagram were obtained using the recommended test equipment and test set-ups listed below.

RECOMMENDED TEST EQUIPMENT

ITEM	SPECIFICATIONS		RECOMMENDED TYPE
Oscilloscope	Frequency response Deflection factor Input impedance Sweep rate	DC to 65 MHz 5 mV to 5 V/Div 10 MΩ, 20 pF 500 ns	Tektronix 7603 or 7613 equipped with 7A15A Amplifier and 7B53A Time-Base unit, or equivalent. A 7A13 Differential Comparator was used to obtain offset.
Probe	Fast rise 10X attenuation probe compatible with the vertical amplifier of the test oscilloscope.		Tektronix P6053B, or equivalent.
Voltmeter (Non-Loading Digital Multimeter)	Input impedance Range	10 MΩ 0 to 500 V	Tektronix 7D13 Digital Multimeter (test oscilloscope must have readout system) or Tektronix DM 501 Digital Multimeter with power module, or equivalent.

VOLTAGE MEASUREMENTS

Voltage measurements on this diagram were made under the following conditions:

Set front panel controls (knob type) to mid-range.
Set VERT MODE for CHOP.
Set TRIG SOURCE for VERT MODE.
Set for NON STORE condition.
No plug-in units are installed.
Voltmeter common is connected to chassis ground.

WAVEFORMS

Waveforms shown on this diagram were obtained under the following conditions:

7633 OSCILLOSCOPE UNDER TEST. Front panel controls are set the same as for voltage measurements. A 7A15A Amplifier unit and a 7B53A Time-Base unit are installed in the mainframe under test. The test oscilloscope 4 Volts calibrator signal is applied to the amplifier unit. The amplifier unit is set for 1 V/division deflection centered on the crt. The 7B53A is set for internal auto-trigger, 0.5 ms/division sweep rate.

TEST OSCILLOSCOPE. The test oscilloscope is externally triggered from the +GATE OUT (MAIN) of the 7633 mainframe under test. The test oscilloscope is dc coupled.

Tolerances of voltages and waveforms shown are 20%.

Ⓐ

http://manoman.skhill.com

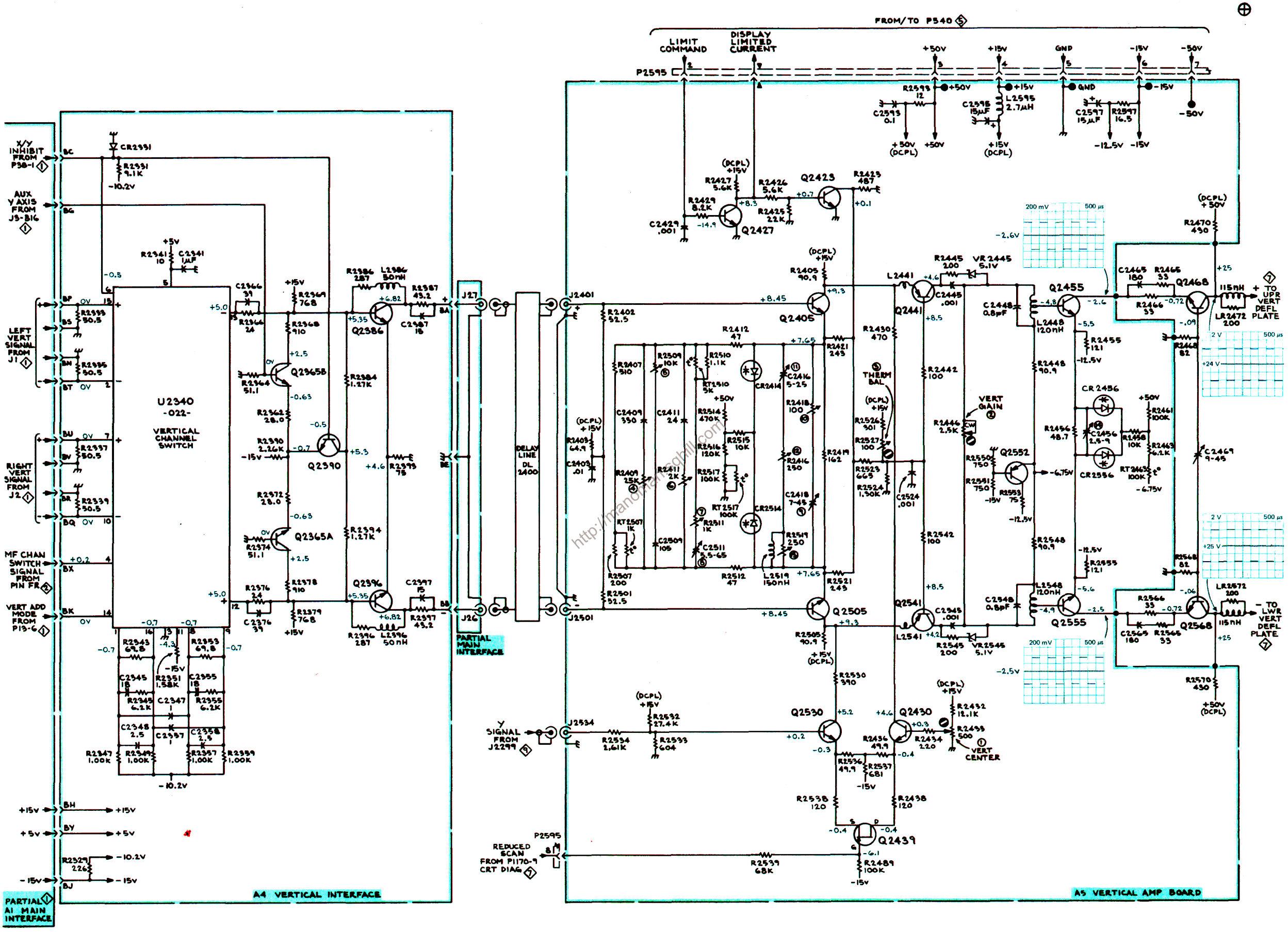

7633

VERTICAL INTERFACE & AMPLIFIER

CMD 4

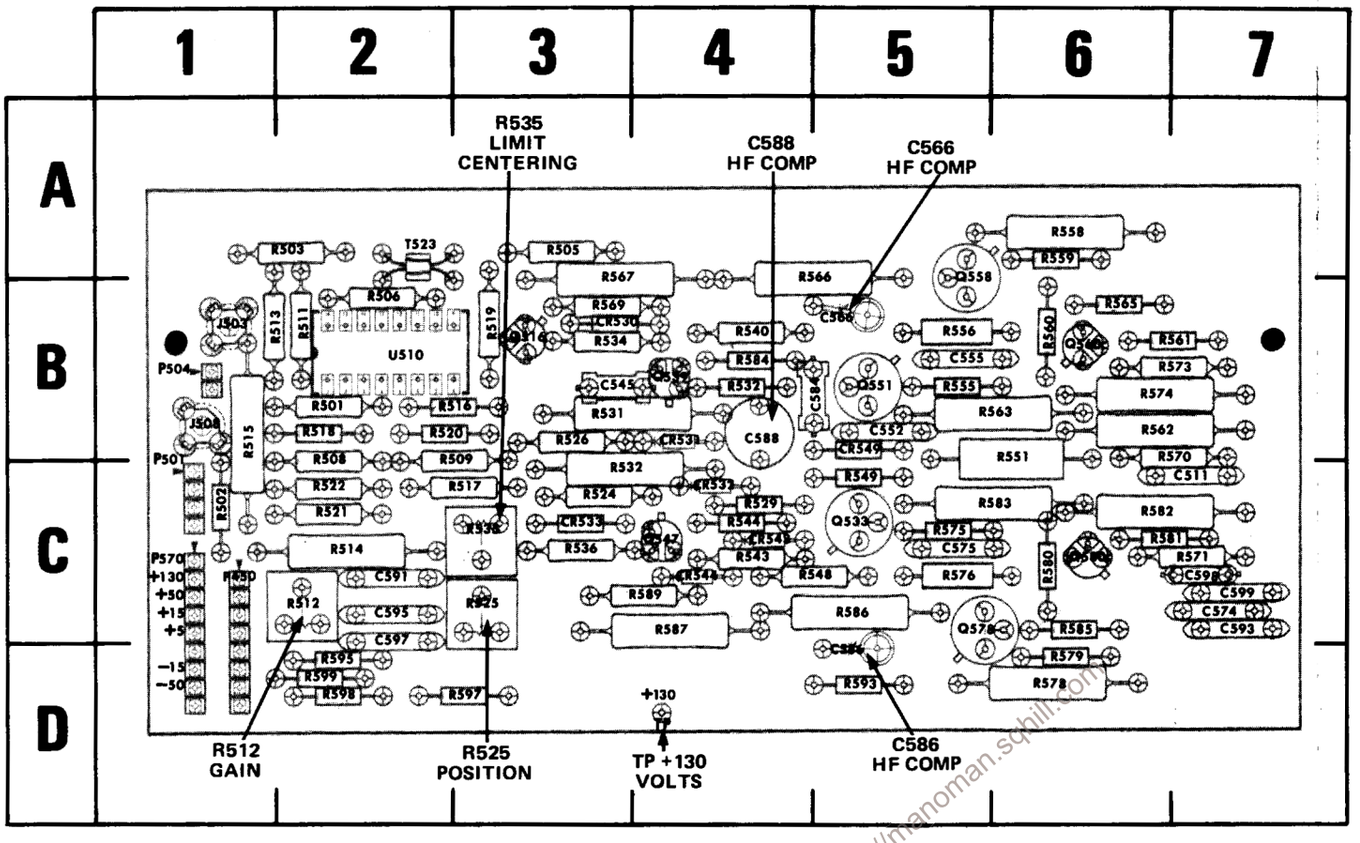

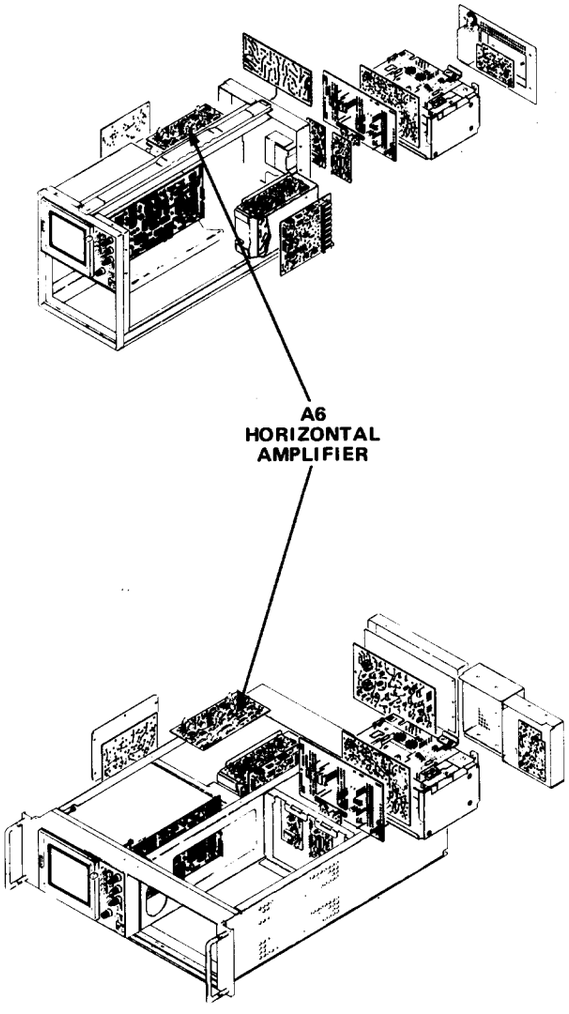

http://manoman.sqhill.com/

Figure 8-8. A6-Horizontal Amplifier board.

CKT NO	GRID LOC	CKT NO	GRID LOC	CKT NO	GRID LOC	CKT NO	GRID LOC	CKT NO	GRID LOC
C511	7B	CR549	5B	R506	2B	R536	3C	R575	5C
C545	3B			R508	2B	R540	4B	R576	5C
C552	5B	J503	1B	R509	2B	R543	4C	R578	6D
C555	5B	J508	1B	R511	2B	R544	4C	R579	6C
C566	5B			R512	2C	R548	4C	R580	6C
C574	7C	P450	1C	R513	1B	R549	5C	R581	6C
C575	5C	P501	1B	R514	2C	R551	6B	R582	6C
C584	4B	P504	1B	R515	1B	R555	5B	R583	5C
C586	5C	P570	1C	R516	3B	R556	5B	R584	4B
C588	4B			R517	3C	R558	6A	R585	6C
C591	2C	Q516	3B	R518	3B	R559	6A	R586	5C
C593	7C	Q533	5C	R519	3B	R560	6B	R587	4C
C595	2C	Q539	4B	R520	3B	R561	6B	R589	4C
C597	2C	Q547	4C	R521	2C	R562	6B	R593	5D
C598	7C	Q551	5B	R522	2C	R563	5B	R595	2D
C599	7C	Q558	5A	R524	3C	R565	6B	R597	3D
		Q560	6B	R525	3C	R566	4A	R598	2D
CR530	3B	Q578	5C	R526	3B	R567	3A	R599	2D
CR531	4B	Q580	6C	R529	4C	R569	3B		
CR532	4C	R501	2B	R531	3B	R570	6B	T523	2A
CR533	3C	R502	1C	R532	4B	R571	7C		
CR543	4C	R503	2A	R534	3B	R573	6B	U510	2B
CR544	4C	R505	3A	R535	3C	R574	6B		

Ⓐ

VOLTAGES AND WAVEFORMS

The voltages and waveforms shown on this diagram were obtained using the recommended test equipment and test set-ups listed below.

RECOMMENDED TEST EQUIPMENT

ITEM	SPECIFICATIONS		RECOMMENDED TYPE
Oscilloscope	Frequency response Deflection factor Input impedance Sweep rate	DC to 65 MHz 5 mV to 5 V/Div 10 MΩ, 20 pF 500 ns	Tektronix 7603 or 7613 equipped with 7A15A Amplifier and 7B53A Time-Base unit, or equivalent. A 7A13 Differential Comparator was used to obtain offset.
Probe	Fast rise 10X attenuation probe compatible with the vertical amplifier of the test oscilloscope.		Tektronix P6053B, or equivalent.
Voltmeter (Non-Loading Digital Multimeter)	Input impedance Range	10 MΩ 0 to 500 V	Tektronix 7D13 Digital Multimeter (test oscilloscope must have readout system) or Tektronix DM 501 Digital Multimeter with power module, or equivalent.

VOLTAGE MEASUREMENTS

Voltage measurements on this diagram were made under the following conditions:

Set front panel controls (knob type) to mid-range.
Set VERT MODE for CHOP.
Set TRIG SOURCE for VERT MODE.
Set for NON STORE condition.
No plug-in units are installed.
Voltmeter common is connected to chassis ground.

WAVEFORMS

Waveforms shown on this diagram were obtained under the following conditions:

7633 OSCILLOSCOPE UNDER TEST. Front panel controls are set the same as for voltage measurements. A 7A15A Amplifier unit and a 7B53A Time-Base unit are installed in the mainframe under test. The test oscilloscope 4 Volts calibrator signal is applied to the amplifier unit. The amplifier unit is set for 1 V/division deflection centered on the crt. The 7B53A is set for internal auto-trigger, 0.5 ms/division sweep rate.

TEST OSCILLOSCOPE. The test oscilloscope is externally triggered from the +GATE OUT (MAIN) of the 7633 mainframe under test. The test oscilloscope is dc coupled.

Tolerances of voltages and waveforms shown are 20%.

http://manoman.shill.com

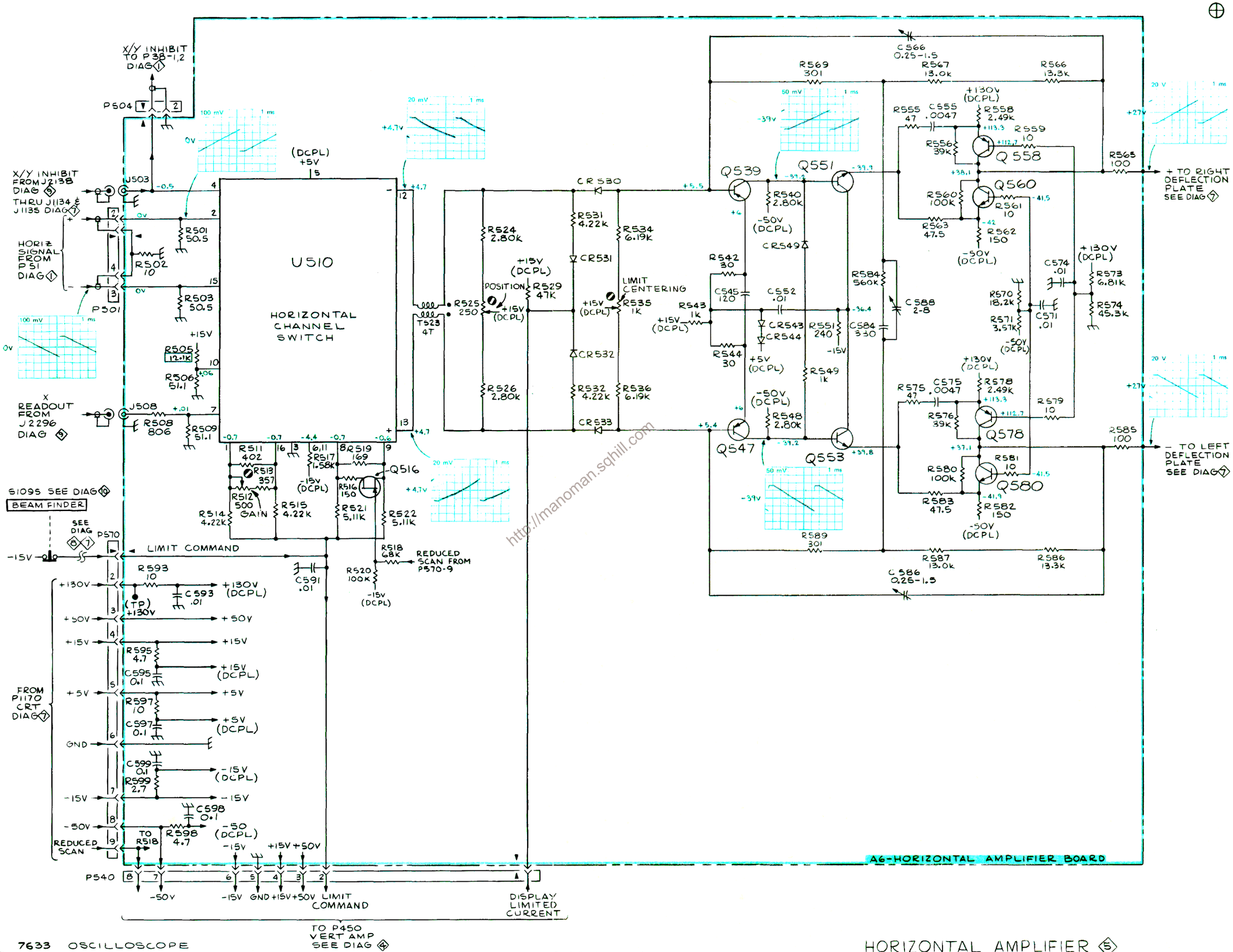

http://manoman.sqhill.com

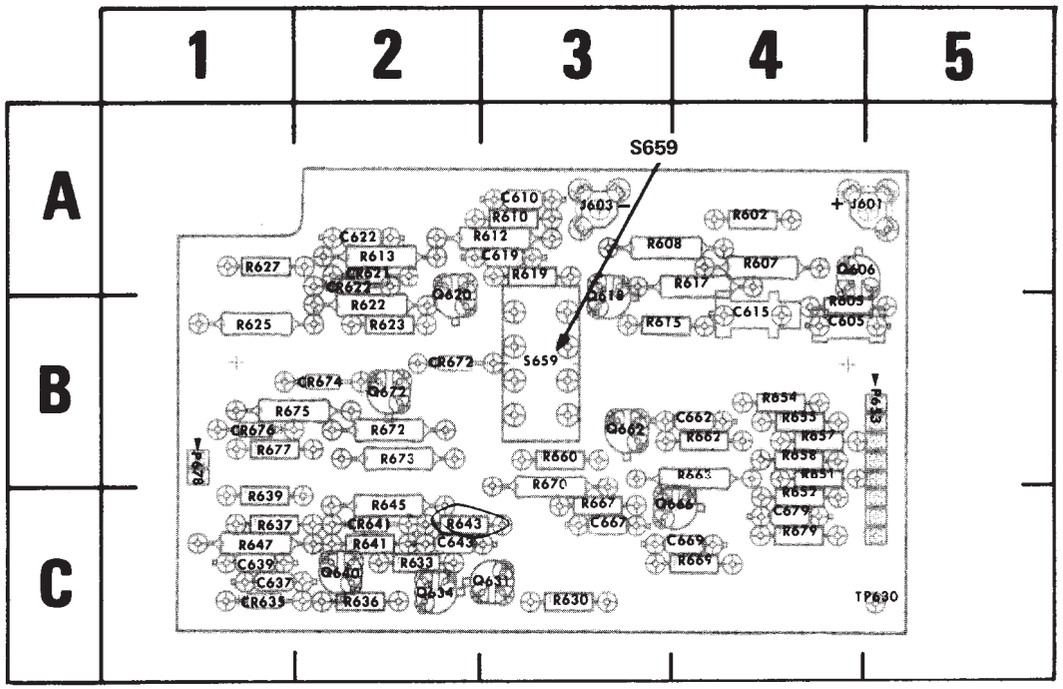

Figure 8-9. A7-Output Signals board.

CKT NO	GRID LOC	CKT NO	GRID LOC	CKT NO	GRID LOC	CKT NO	GRID LOC
C605	4B	J603	3A	R615	3B	R660	3B
C610	3A			R617	4A	R662	4B
C615	4B	P653	5B	R619	3A	R663	4B
C619	3A	P678	1B	R622	2B	R667	3C
C622	2A			R623	2B	R669	4C
C637	1C	Q606	4A	R625	1B	R670	3B
C639	1C	Q618	3B	R627	1A	R672	2B
C643	2C	Q620	2A	R630	3C	R673	2B
C662	4B	Q631	3C	R633	2C	R675	2B
C667	3C	Q634	2C	R636	2C	R677	1B
C669	4C	Q640	2C	R637	1C	R679	4C
C679	4C	Q662	3B	R639	1C		
		Q666	4C	R641	2C	S659	3B
CR621	2A	Q672	2B	R643	2C		
CR622	2A			R645	2C	TP630	5C
CR635	1C	R602	4A	R647	1C		
CR641	2C	R605	4B	R651	4B		
CR672	2B	R607	4A	R652	4C		
CR674	2B	R608	3A	R654	4B		
CR676	1B	R610	3A	R655	4B		
		R612	3A	R657	4B		
J601	5A	R613	2A	R658	4B		

Ⓐ

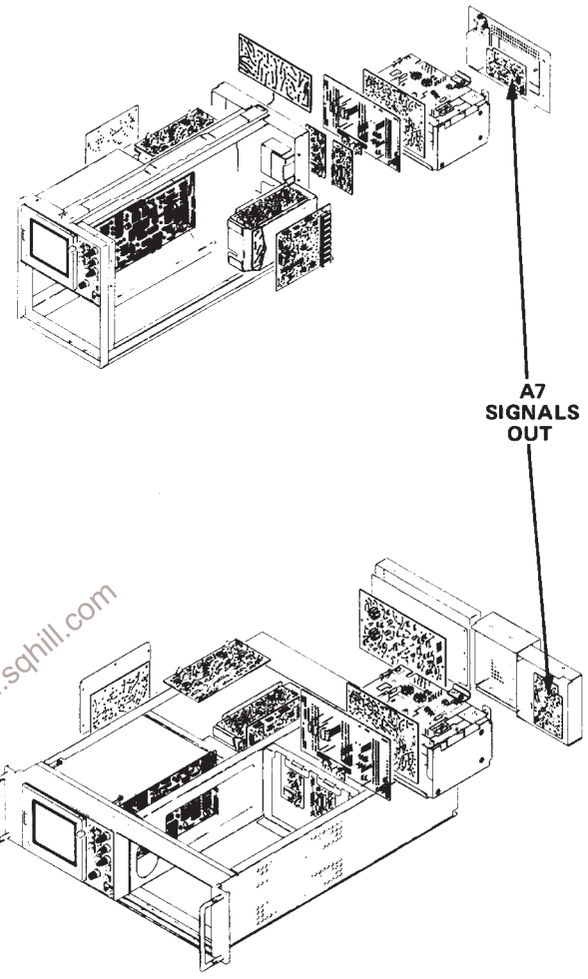

http://manoman.sqhill.com

VOLTAGES AND WAVEFORMS

The voltages and waveforms shown on this diagram were obtained using the recommended test equipment and test set-ups listed below.

RECOMMENDED TEST EQUIPMENT

ITEM	SPECIFICATIONS		RECOMMENDED TYPE
Oscilloscope	Frequency response Deflection factor Input impedance Sweep rate	DC to 65 MHz 5 mV to 5 V/Div 10 MΩ, 20 pF 500 ns	Tektronix 7603 or 7613 equipped with 7A15A Amplifier and 7B53A Time-Base unit, or equivalent. A 7A13 Differential Comparator was used to obtain offset.
Probe	Fast rise 10X attenuation probe compatible with the vertical amplifier of the test oscilloscope.		Tektronix P6053B, or equivalent.
Voltmeter (Non-Loading Digital Multimeter)	Input impedance Range	10 MΩ 0 to 500 V	Tektronix 7D13 Digital Multimeter (test oscilloscope must have readout system) or Tektronix DM 501 Digital Multimeter with power module, or equivalent.

VOLTAGE MEASUREMENTS

Voltage measurements on this diagram were made under the following conditions:

Set front panel controls (knob type) to mid-range.
Set VERT MODE for CHOP.
Set TRIG SOURCE for VERT MODE.
Set for NON STORE condition.
No plug-in units are installed.
Voltmeter common is connected to chassis ground.

WAVEFORMS

Waveforms shown on this diagram were obtained under the following conditions:

7633 OSCILLOSCOPE UNDER TEST. Front panel controls are set the same as for voltage measurements. A 7A15A Amplifier unit and a 7B53A Time-Base unit are installed in the mainframe under test. The test oscilloscope 4 Volts calibrator signal is applied to the amplifier unit. The amplifier unit is set for 1 V/division deflection centered on the crt. The 7B53A is set for internal auto-trigger, 0.5 ms/division sweep rate.

TEST OSCILLOSCOPE. The test oscilloscope is externally triggered from the +GATE OUT (MAIN) of the 7633 mainframe under test. The test oscilloscope is dc coupled.

Tolerances of voltages and waveforms shown are 20%.

http://manoman.schill.com

VERTICAL SIGNAL FROM TRIGGER SELECTOR P339 DIAG 5

J601 J603

R602 100

R605 560 C605 100 Q606 R607 15.8 R608 82.5 C610 .001 R610 4.7 +15V R615 24 C615 27 R617 15.8 Q618 R619 100 C619 .001 R612 500 Q620 R613 1K CR621 R622 1.43K CR622 C622 .01 R623 4.7 -15V R625 2.1K R627 100

J629 VERT SIG OUT

500 mV 1 ms +0.4V

R645 4.99K R630 100 Q631 Q634 CR635 R633 2.2K +15V C637 22 R636 240 R639 100 C639 0.1 Q640 R637 1.5K R641 2.7K CR641 C643 0.1 R643 22 -15V

2 V 2 ms +6.4V

R647 931 J649 + SAWTOOTH

SWEEP FROM P53-2,1 DIAG 1

P653 (TP) 630

50 mV 2 ms +.04V

SWEEP GATE FROM P53-4,3 DIAG 1

AUX SWEEP GATE FROM 53-8,7 DIAG 1

DELAY GATE FROM P53-6,5 DIAG 1

R651 200 R652 12K -15V (DCPL) R654 200 R655 12K -15V (DCPL) R657 200 R658 12K -15V (DCPL)

S659 GATE (SELECTOR)

SWP GATE
AUX GATE
DLY GATE

R660 100 Q662 R662 820 C662 .022 +15V R663 1K -15V (DCPL) Q666 R667 560 C667 .001 R669 4.7 R670 301 CR672 R672 732 C669 0.1 R673 2.21K Q672 CR674 CR676 R675 909 R677 39

J679 + GATE

2 V 2 ms +5.4V

+15V -15V (DCPL) R679 4.7 C679 0.1

P678

FROM P998 DIAG 8

A7 - OUTPUT SIGNALS BOARD

SEE PARTS LIST FOR SEMICONDUCTOR TYPES.

http://manoman.sqhill.com

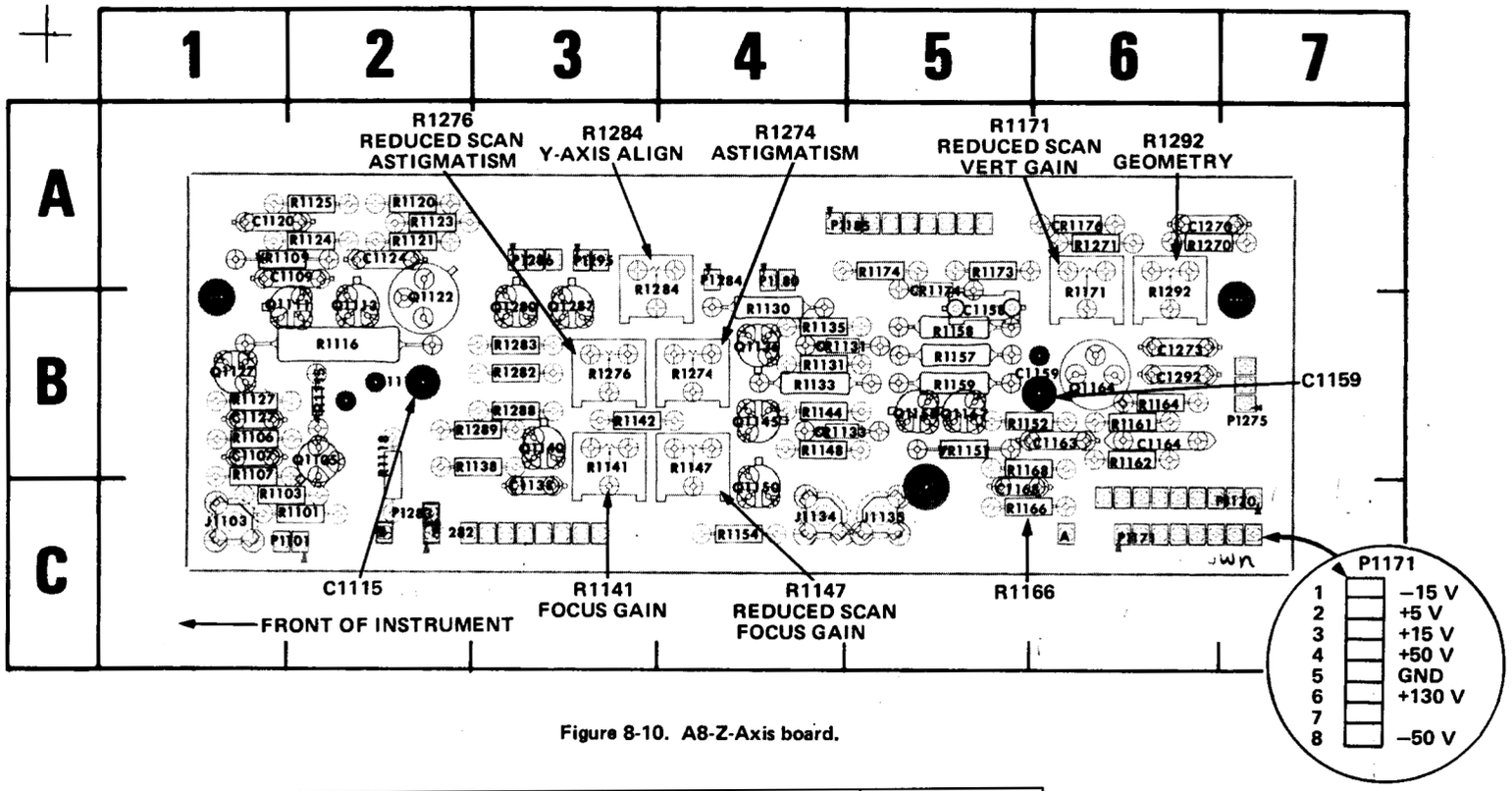

Figure 8-10. A8-Z-Axis board.

CKT NO	GRID LOC	CKT NO	GRID LOC	CKT NO	GRID LOC	CKT NO	GRID LOC
C1107	1B	P1170	7C	R1101	2C	R1158	5B
C1109	2A	P1171	6C	R1103	1C	R1159	5B
C1115	2B	P1180	4A	R1106	1B	R1161	6B
C1120	1A	P1185	5A	R1107	1B	R1162	6B
C1124	2A	P1275	7B	R1115	2B	R1164	6B
C1138	3C	P1283	2C	R1116	2B	R1166	6C
C1158	5B	P1282	2C	R1118	2B	R1168	6B
C1127	1B	P1284	4A	R1120	2A	R1171	6B
C1159	6B	P1286	3A	R1121	2A	R1173	5A
C1163	6B	P1295	3A	R1123	2A	R1174	5A
C1164	6B			R1124	2A	R1204	4B
C1168	5C	Q1105	2B	R1125	2A	R1270	6A
C1270	6A	Q1111	2B	R1127	1B	R1271	6A
C1273	6B	Q1113	2B	R1130	4B	R1274	4B
C1292	6B	Q1122	2B	R1131	4B	R1276	3B
		Q1127	1B	R1133	4B	R1282	3B
CR1131	4B	Q1136	4B	R1135	4B	R1283	3B
CR1133	4B	Q1140	3B	R1138	3B	R1288	3B
CR1174	5B	Q1145	4B	R1141	3B	R1289	3B
CR1176	6A	Q1150	4C	R1142	3B	R1292	6B
		Q1155	5B	R1144	4B		
J1103	1C	Q1164	6B	R1147	4B	VR1109	1A
J1134	4C	Q1167	5B	R1148	4B	VR1151	5B
J1135	5C	Q1280	3B	R1152	6B		
		Q1287	3B	R1154	4C		
P1101	2C			R1157	5B		

Located on front of board:
C1201
C1202 (relocated from back of board SN BO60000-up)
C1206 (relocated to back of board SN BO60000-up)

http://manoman.sqhill.com

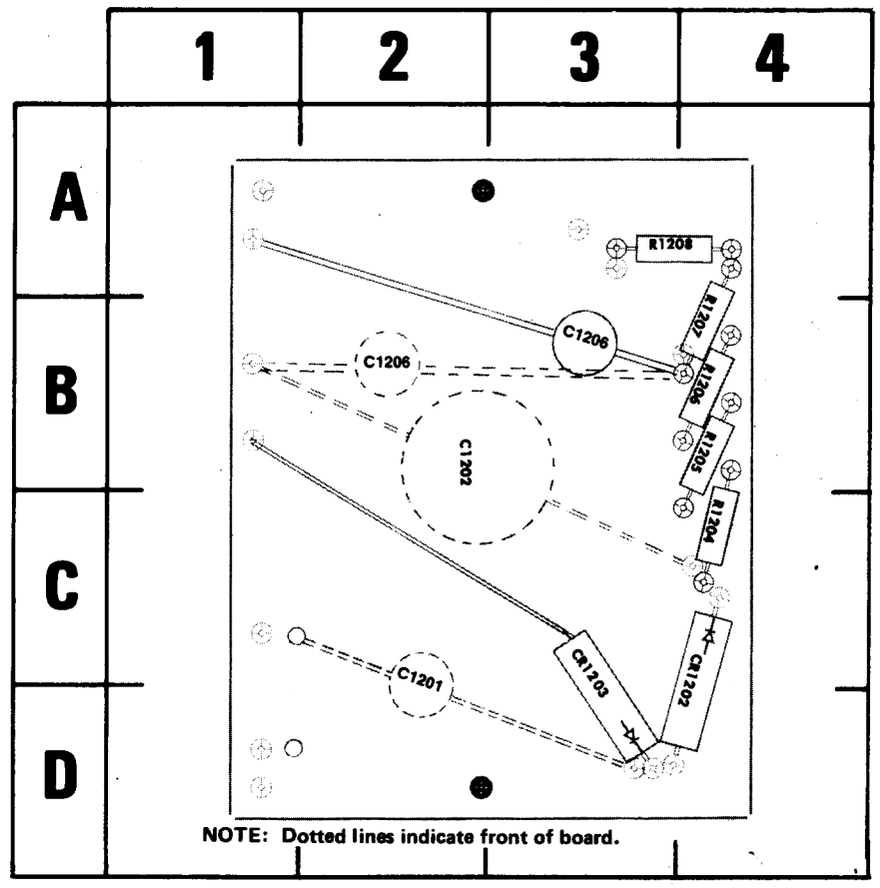

NOTE: Dotted lines indicate front of board.

Figure 8-11. A9—Anode board (back view).

CKT NO	GRID LOC
C1201	D2
C1202	2B
C1206	3B
CR1202	4D
CR1203	3C
R1204	4C
R1205	4B
R1206	4B
R1207	4B
R1208	3A

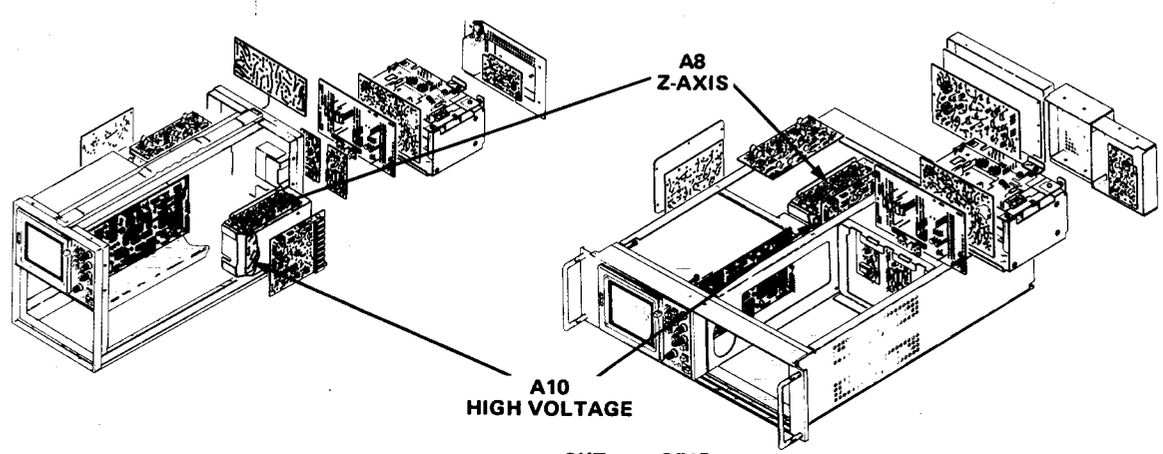

CKT GRID

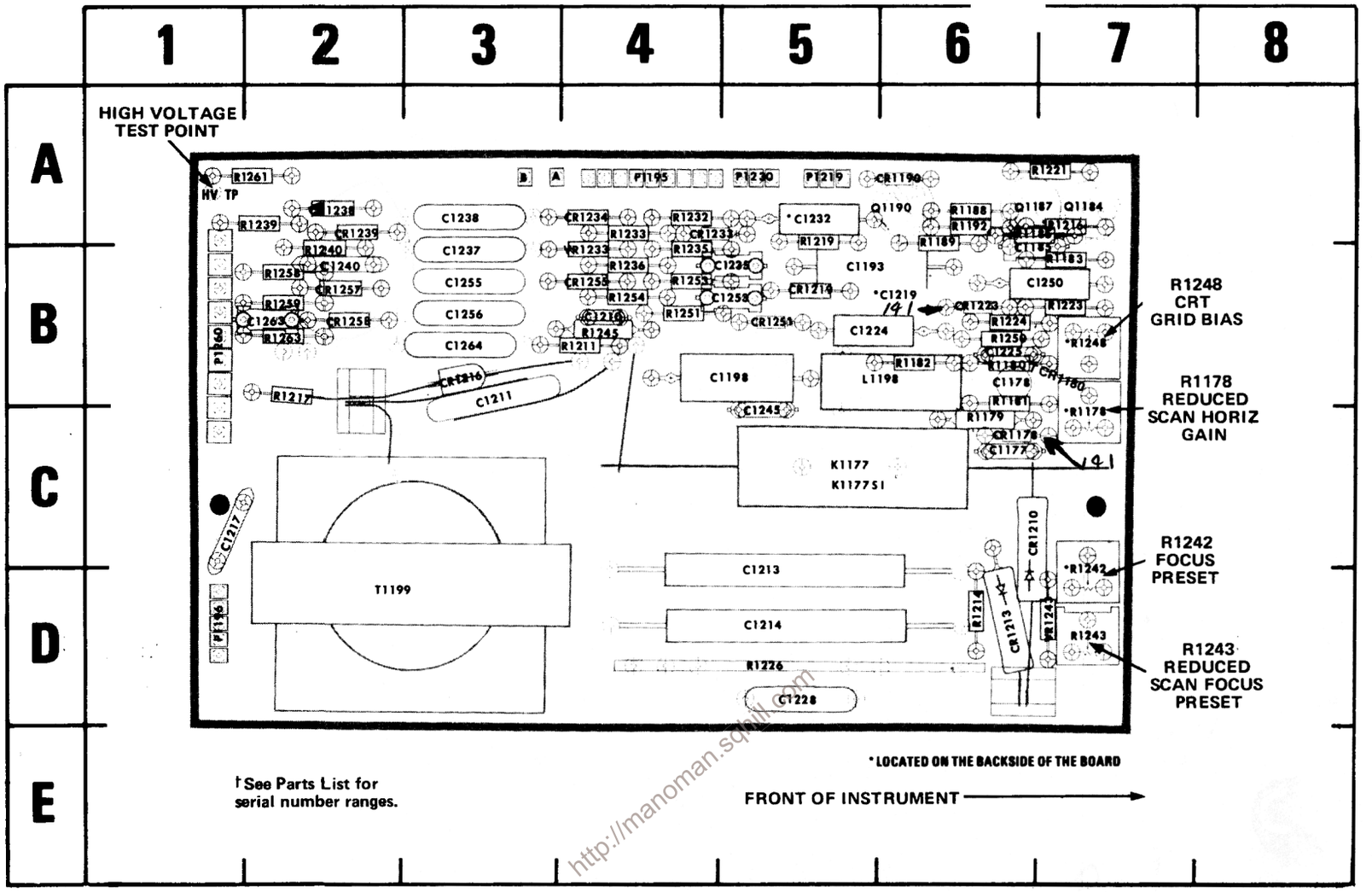

http://manoman.sqwk.com

Figure 8-12. A10-High Voltage board.

CKT NO	GRID LOC	CKT NO	GRID LOC	CKT NO	GRID LOC	CKT NO	GRID LOC	CKT NO	GRID LOC
C1177	6C	C1256	3B	L1198	5B	R1193	4B	R1248	7B
C1193	5B	C1263	2B			R1211	4B	R1250	6B
C1198	4B	C1264	3B	P1195	4A	R1214	6D	R1251	4B
C1210	4B	CR1180	7B	P1196	1D	R1217	2C	R1253	4B
C1211	3C	CR1190	6A	P1219	5A	R1219	5B	R1254	4B
C1213	5D	CR1210	6C	P1230	5A	R1221	7A	R1258	2B
C1214	5D	CR1213	6D	P1260	1B	R1223	7B	R1259	2B
C1217	1C	CR1216	3B			R1224	6B	R1261	1A
C1219	6B	CR1219	5B	Q1184	7A	R1225	6B	R1263	2B
C1224	5B	CR1223	6B	Q1187	6A	R1226	5D		
C1225	6C	CR1233	4B	Q1190	6A	R1227	4D	T1199	2D
C1228	5D	CR1234	4A			R1228	4D		
C1232	5A	CR1238	2A	R1177	5D	R1232	4A	VR1233	4B
C1235	4B	CR1239	2B	R1178	7C	R1233	4B	VR1243	6D
C1237	3B	CR1251	5B	R1179	6C	R1235	4B		
C1238	3A	CR1255	4B	R1180	6C	R1236	4B		
C1240	2B	CR1257	2B	R1183	7B	R1239	2A		
C1245	5C	CR1258	2B	R1185	6B	R1240	2B		
C1250	6B			R1188	6A	R1242	7D		
C1253	4B	K1177	5C	R1189	6B	R1243	7D		
C1255	3B			R1192	6B	R1245	4B		

VOLTAGES AND WAVEFORMS

The voltages and waveforms shown on this diagram were obtained using the recommended test equipment and test set-ups listed below.

RECOMMENDED TEST EQUIPMENT

ITEM	SPECIFICATIONS		RECOMMENDED TYPE
Oscilloscope	Frequency response Deflection factor Input impedance Sweep rate	DC to 65 MHz 5 mV to 5 V/Div 10 MΩ, 20 pF 500 ns	Tektronix 7603 or 7613 equipped with 7A15A Amplifier and 7B53A Time-Base unit, or equivalent. A 7A13 Differential Comparator was used to obtain offset.
Probe	Fast rise 10X attenuation probe compatible with the vertical amplifier of the test oscilloscope.		Tektronix P6053B, or equivalent.
Voltmeter (Non-Loading Digital Multimeter)	Input impedance Range	10 MΩ 0 to 500 V	Tektronix 7D13 Digital Multimeter (test oscilloscope must have readout system) or Tektronix DM 501 Digital Multimeter with power module, or equivalent.

VOLTAGE MEASUREMENTS

Voltage measurements on this diagram were made under the following conditions:

Set front panel controls (knob type) to mid-range.
Set VERT MODE for CHOP.
Set TRIG SOURCE for VERT MODE.
Set for NON STORE condition.
No plug-in units are installed.
Voltmeter common is connected to chassis ground.

WAVEFORMS

Waveforms shown on this diagram were obtained under the following conditions:

7633 OSCILLOSCOPE UNDER TEST. Front panel controls are set the same as for voltage measurements. A 7A15A Amplifier unit and a 7B53A Time Base unit are installed in the mainframe under test. The test oscilloscope 4 Volts calibrator signal is applied to the amplifier unit. The amplifier unit is set for 1 V/division deflection centered on the crt. The 7B53A is set for internal auto-trigger, 0.5 ms/division sweep rate.

TEST OSCILLOSCOPE. The test oscilloscope is dc coupled and internally triggered.

Tolerances of voltages and waveforms shown are 20%.

http://manoman.tekhill.com

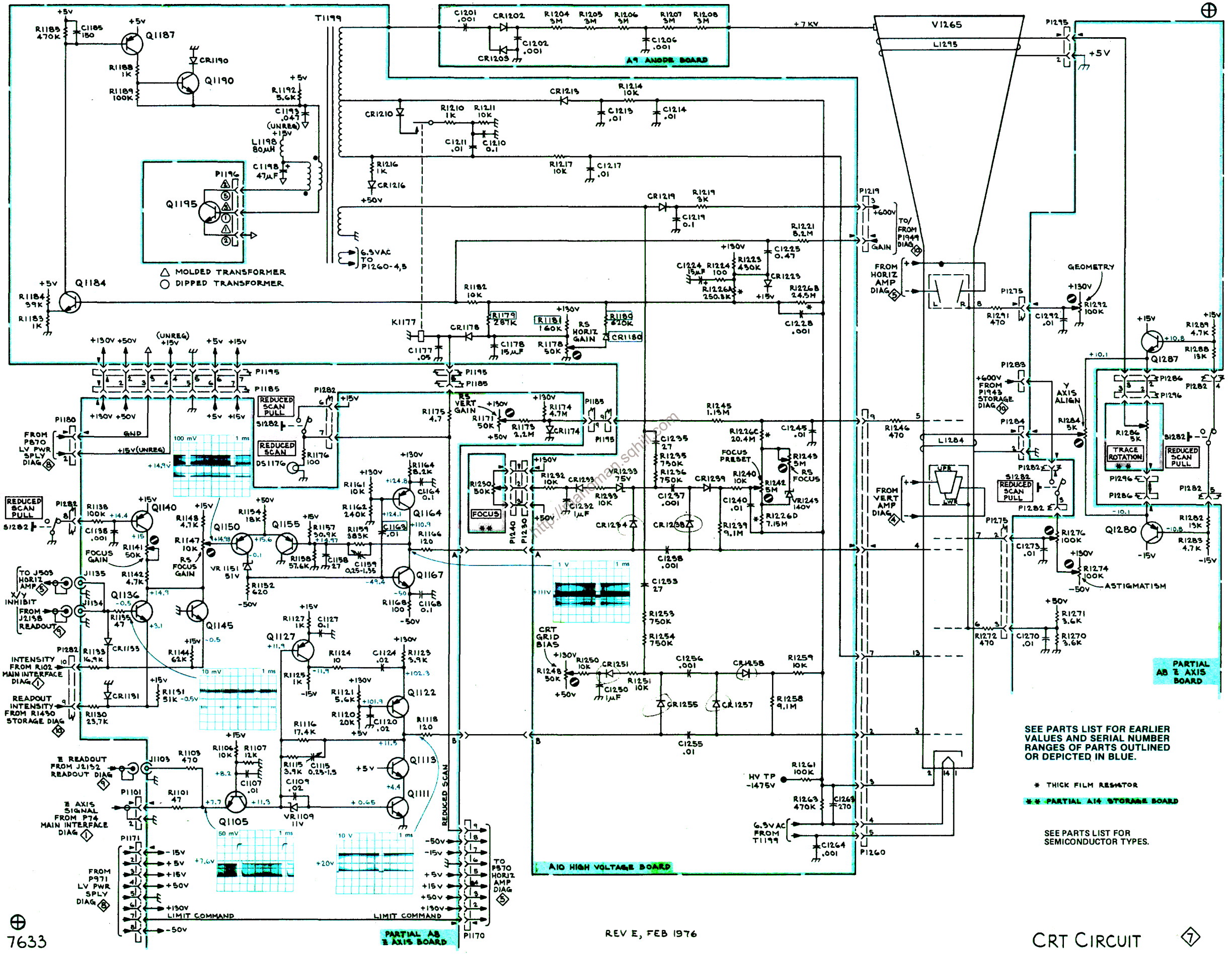

SEE PARTS LIST FOR EARLIER VALUES AND SERIAL NUMBER RANGES OF PARTS OUTLINED OR DEPICTED IN BLUE.

* THICK FILM RESISTOR

** PARTIAL A14 STORAGE BOARD

SEE PARTS LIST FOR SEMICONDUCTOR TYPES.

REV E, FEB 1976

7633

CRT CIRCUIT

7

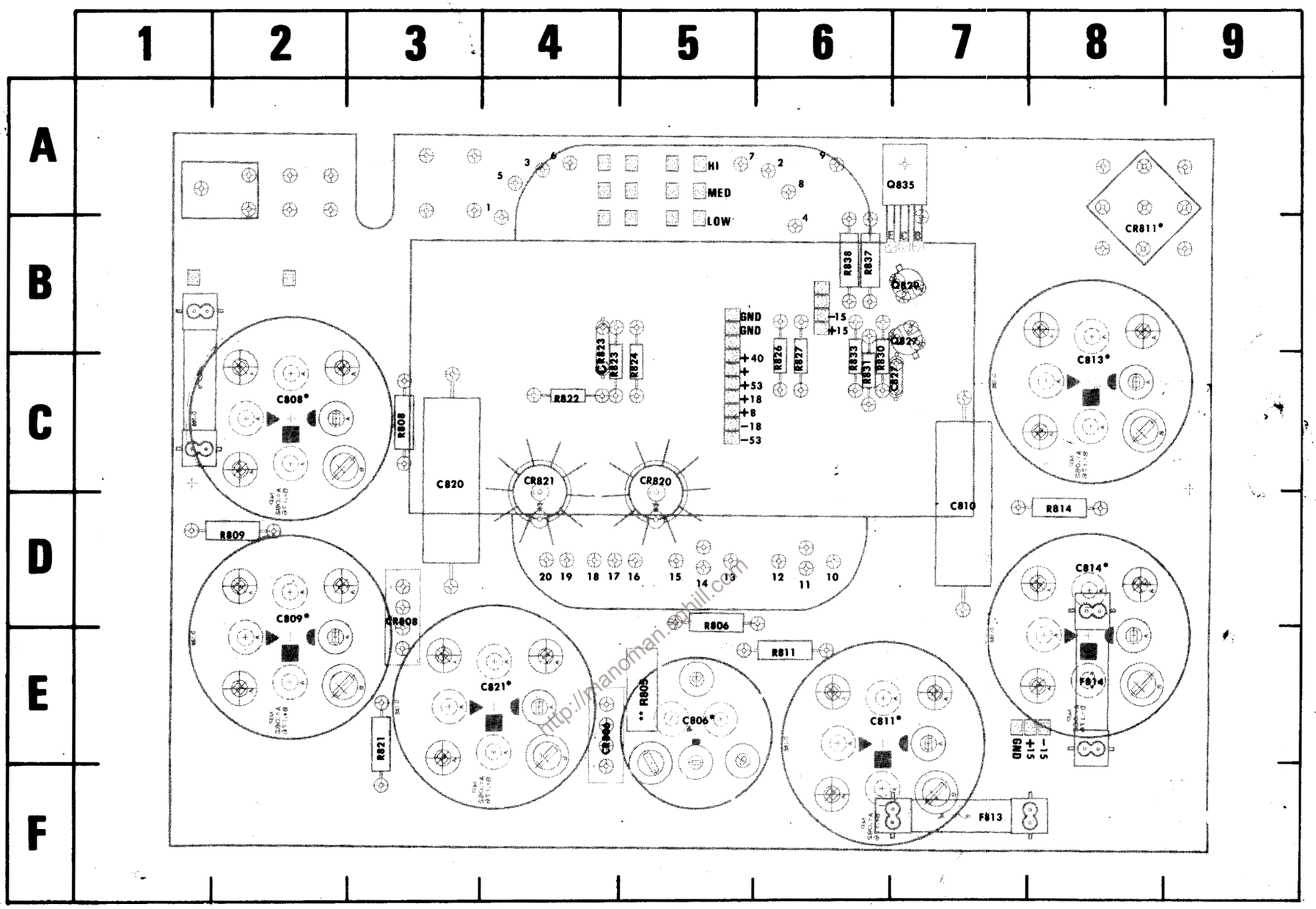

REV. C, JAN 1975

Figure 8-13. A11—Low-Voltage Rectifier board.

CKT NO	GRID LOC	CKT NO	GRID LOC	CKT NO	GRID LOC
C806	5E	CR811	8B	R808	3C
C808	2C	CR820	5C	R809	2D
C809	2D	CR821	4C	R811	6E
C810	7D	CR823	4C	R814	8D
C811	6E			R821	3E
C813	8C	F813	7F	R822	4C
C814	8D	F814	8E	R824	5C
C820	3D			R826	6C
C821	4E	Q825	7A	R827	6C
C827	7C	Q827	7B	R830	6C
		Q829	7B	R831	6C
CR806	4E			R833	6C
CR808	3D	R805	5E	R837	6B
		R806	5D	R838	6B

*Located on backside of board.

**See Parts List for serial number ranges.

MORE

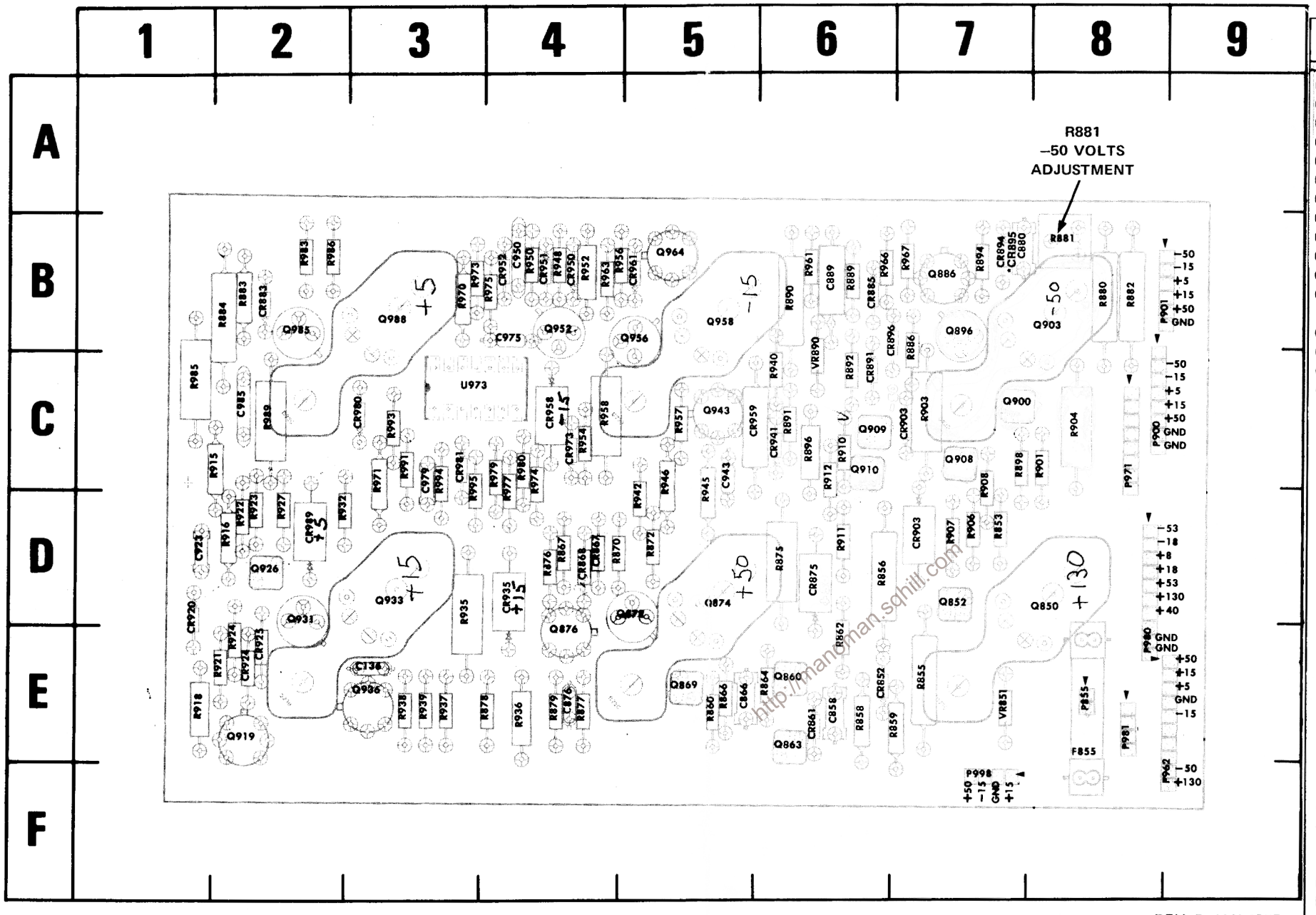

REV. B, JAN 1975

*See Parts List for serial number ranges.

Figure 8-14. A12-Low-Voltage Regulator board.

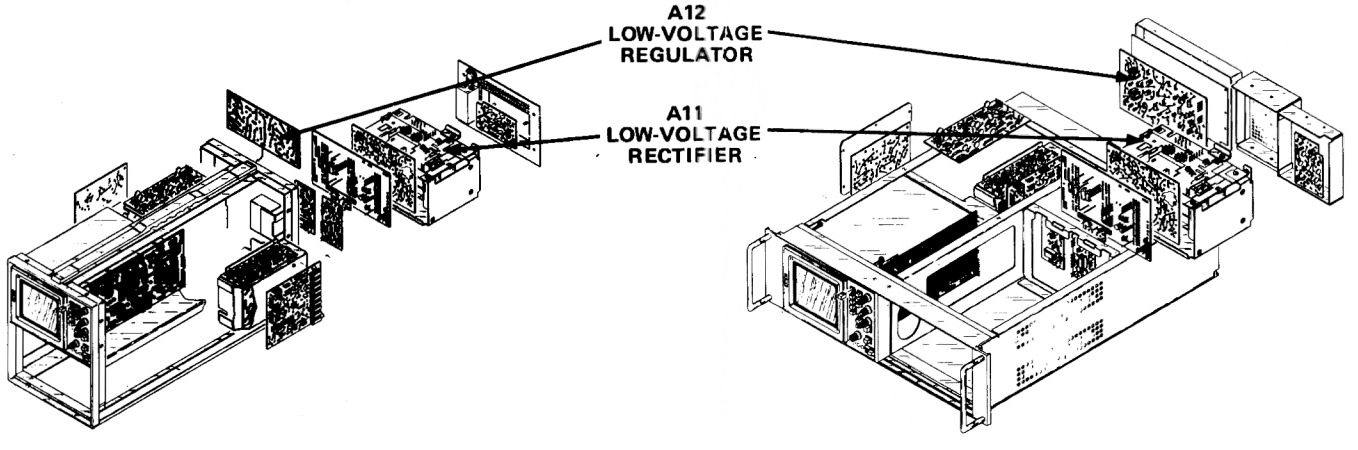

CKT NO	GRID LOC	CKT NO	GRID LOC	CKT NO	GRID LOC
C136	3E	Q874	5D	R907	7D
C858	6E	Q876	4E	R908	7C
C866	5E	Q886	7B	R910	6C
C876	4E	Q896	7B	R911	6D
C880	7B	Q900	7C	R912	6C
C889	6B	Q903	8B	R915	2C
C923	1D	Q908	7C	R916	2D
C943	5C	Q909	6C	R918	1E
C950	4B	Q910	6C	R921	2E
C975	4B	Q919	2E	R922	2D
C979	3C	Q926	2D	R923	2D
C985	2C	Q931	2D	R924	2E
		Q933	3D	R927	2D
CR852	6E	Q936	3E	R932	2D
CR861	6E	Q943	5C	R935	3D
CR867	4D	Q952	4B	R936	4E
CR868	4D	Q956	5B	R937	3E
CR875	6D	Q958	5B	R938	3E
CR883	2B	Q964	5B	R939	3E
CR885	6B	Q985	2B	R940	6C
CR891	6C	Q988	3B	R942	5D
CR894	7B			R945	5C
CR895	7B	R853	7D	R946	5C
CR896	6B	R855	7E	R948	4B
CR903	7D	R856	6D	R950	4B
CR920	1D	R858	6E	R952	4B
CR924	2E	R859	7E	R954	4C
CR925	2E	R860	5E	R956	4B
CR935	4D	R862	6E	R957	5C
CR941	6C	R864	6E	R958	4C
CR950	4B	R866	5E	R961	6B
CR951	4B	R867	4D	R963	4B
CR952	4B	R870	4D	R966	6B
CR958	4C	R872	5D	R967	7B
CR959	5C	R875	6D	R970	3B
CR961	5B	R876	4D	R971	3C
CR973	4C	R877	4E	R973	3B
CR980	3C	R878	4E	R974	4C
CR981	3C	R879	4E	R975	4B
CR989	2D	R880	8B	R977	4C
		R881	8B	R979	4C
F855	8E	R882	8B	R980	4C
		R883	2B	R983	2B
P855	8E	R884	2B	R985	1C
P900	8C	R886	7B	R986	2B
P901	8B	R889	6B	R989	2C
P971	8C	R890	6B	R991	3C
P980	8E	R891	6C	R993	3C
P981	8E	R892	6C	R994	3C
P998	7F	R894	7B	R995	3C
		R896	6C		
Q850	8D	R898	7C	U973	3C
Q852	7D	R901	8C		
Q860	6E	R903	7C	VR851	7E
Q863	6E	R904	8C	VR890	6C
Q869	5E	R906	7D		
Q872	5D				

http://manohan.sqhillr.com

VOLTAGES AND WAVEFORMS

The voltages and waveforms shown on this diagram were obtained using the recommended test equipment and test set-ups listed below.

RECOMMENDED TEST EQUIPMENT

ITEM	SPECIFICATIONS		RECOMMENDED TYPE
Oscilloscope	Frequency response Deflection factor Input impedance Sweep rate	DC to 65 MHz 5 mV to 5 V/Div 10 MΩ, 20 pF 500 ns	Tektronix 7603 or 7613 equipped with 7A22 Amplifier and 7B53A Time-Base unit, or equivalent.
Probe	Fast rise 10X attenuation probe compatible with the vertical amplifier of the test oscilloscope.		Tektronix P6053B, or equivalent.
Voltmeter (Non-Loading Digital Multimeter)	Input impedance Range	10 MΩ 0 to 500 V	Tektronix 7D13 Digital Multimeter (test oscilloscope must have readout system) or Tektronix DM 501 Digital Multimeter with power module, or equivalent.
Calibration Fixture	Used for loading power supply for ripple waveforms.		Tektronix Signal Standardizer, Tektronix Part Number 067-0587-01, or equivalent.

VOLTAGE MEASUREMENTS

Voltage measurements on the diagram were made under the following conditions:

Set knob type front panel controls (except READOUT) to mid-range.
Turn READOUT to off.
Set VERT MODE for CHOP.
Set for NON STORE condition.
Set TRIG SOURCE for VERT MODE.
No plug-ins are installed.
Voltmeter common is connected to chassis ground.

WAVEFORMS

Waveforms shown on this diagram were obtained under the following conditions:

7633 OSCILLOSCOPE UNDER TEST. Front panel controls are set the same as for voltage measurements. A signal standardizer unit is installed in a vertical compartment and a 7B53A Time Base unit in the horizontal compartment. The signal standardizer unit is used for power supply loading and is set for AUX IN with a REP RATE of 100 Hz. No signal is applied. The 7B53A is set for internal auto-trigger, 0.5 ms/division sweep rate.

TEST OSCILLOSCOPE. The test oscilloscope is ac coupled and set for LINE trigger. A 7A22 Amplifier unit is installed and set as follows:

HF −3 dB POINT	30 kHz
LF −3 dB point	DC
+INPUT	AC
−INPUT	GND

Tolerances of voltages and waveforms shown are 20%.

http://manuals.hvwtech.com

Ⓐ

LV POWER SUPPLY ◈8

All REGULATOR BOARD

Alt RECTIFIER BOARD

SEE PARTS LIST FOR EARLIER VALUES AND SERIAL NUMBER RANGES OF PARTS MARKED WITH BLUE OUTLINE.

SEE PARTS LIST FOR SEMICONDUCTOR TYPES.

* CA 3046

REGULATOR BOARD

LINE TRIGGER TO P90-1 DIAG

GRATICULE ILLUM

REAR PANEL GROUND

GROUNDED AT PLUG-IN HOUSING

VOLTAGE SELECTOR JUMPER FOR 220 V OPERATION

REV. C, JAN 1975

7633

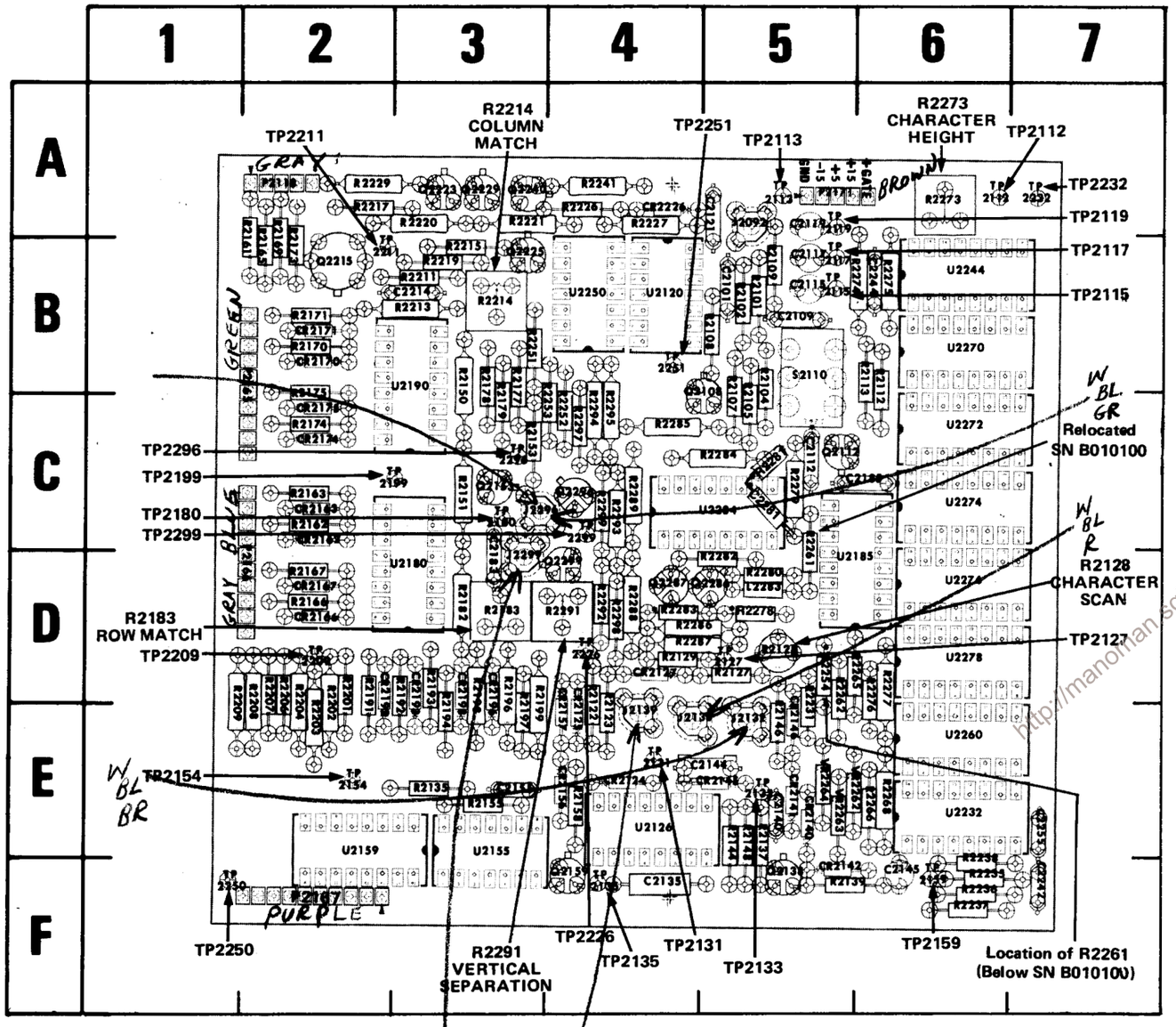

*See Parts List for serial number ranges.

Figure 8-15. A13-Readout board.

CKT NO	GRID LOC	CKT NO	GRID LOC	CKT NO	GRID LOC	CKT NO	GRID LOC
C2101	5B	P2166	2D	R2182	3D	R2285	4C
C2109	5B	P2171	5A	R2183	3D	R2286	4D
C2112	5C			R2185	3E	R2287	4D
C2115	5B	Q2108	4C	R2191	2D	R2288	4D
C2117	5B	Q2112	5C	R2192	3D	R2289	4C
C2119	5A	Q2138	5F	R2193	3D	R2292	4D
C2121	5A	Q2153	3C	R2194	3E	R2291	4D
C2135	4F	Q2159	4F	R2196	3D	R2293	4C
C2140	5E	Q2215	2B	R2197	3D	R2294	4C
C2242	7F	Q2223	3A	R2198	3D	R2295	4C
C2144	5E	Q2225	3B	R2199	3D	R2297	4C
C2145	6F	Q2229	3A	R2201	2D	R2298	4D
C2155	3E	Q2240	3A	R2202	2D	R2299	4C
C2185	6C	Q2287	4D	R2203	2E	S2110	5B
C2183	3D	Q2296	4C	R2204	2D	TP2112	6A
C2214	3B	Q2299	4D	R2206	2D	TP2113	5A
C2244	6B			R2207	2D	TP2115	5B
C2255	7E			R2208	2D	TP2117	5B
C2281	5C	R2101	5B	R2209	1E	TP2119	5A
C2286	5D	R2102	5B	R2211	3B	TP2127	5D
		R2104	5B	R2213	3B	TP2131	4E
CR2124	4E	R2105	5C	R2214	3B	TP2133	5E
CR2125	4E	R2107	5C	R2215	3B	TP2135	4F
CR2127	4D	R2108	5B	R2217	2A	TP2154	2E
CR2140	5E	R2109	5B	R2219	3B	TP2159	6F
CR2141	5E	R2112	6B	R2220	3A	TP2180	3C
CR2142	5F	R2113	6B	R2221	3A	TP2199	3C
CR2145	5E	R2122	4D	R2226	4A	TP2209	2D
CR2146	5E	R2123	4E	R2227	4A	TP2211	2B
CR2156	4E	R2127	5D	R2229	2A	TP2232	7A
CR2157	4E	R2128	5D	R2231	5D	TP2226	4D
CR2162	2C	R2129	4D	R2235	6F	TP2250	1F
CR2163	2C	R2137	5E	R2236	6F	TP2251	4B
CR2166	2D	R2139	5F	R2237	6F	TP2296	3C
CR2167	2D	R2144	5E	R2238	6E	TP2299	4C
CR2170	2B	R2146	5E	R2241	4A	U2120	4B
CR2171	2B	R2148	5E	R2251	3B	U2126	4E
CR2174	2C	R2150	3B	R2252	4C	U2155	3E
CR2175	2C	R2151	3C	R2253	4C	U2159	2E
CR2192	2D	R2153	3C	R2254	5D	U2180	3D
CR2193	3D	R2155	3E	R2261	5C	U2185	6D
CR2196	3D	R2158	4E	R2262	5D	U2190	3B
CR2198	3D	R2161	2B	R2265	6D	U2232	6E
CR2226	4A	R2162	2C	R2266	6E	U2244	6B
J2092	5A	R2163	2C	R2268	5E	U2250	4B
J2132	5E	R2165	2B	R2273	6A	U2260	6E
J2138	4E	R2166	2D	R2274	6B	U2270	6B
J2139	4E	R2167	2D	R2275	6B	U2272	6C
J2296	3C	R2169	2B	R2276	6D	U2274	6C
J2299	3D	R2170	2B	R2277	6D	U2276	6D
		R2171	2B	R2278	5D	U2278	6D
L2283	5D	R2173	2B	R2279	5C	U2284	5C
		R2174	2C	R2280	5D		
P2118	2A	R2175	2C	R2281	5C		
P2167	2F	R2177	3B	R2282	5D	VR2262	6E
P2250	2F	R2178	3B	R2283	4D	VR2263	5E
P2165	2B	R2179	3C	R2284	5C	VR2264	5E

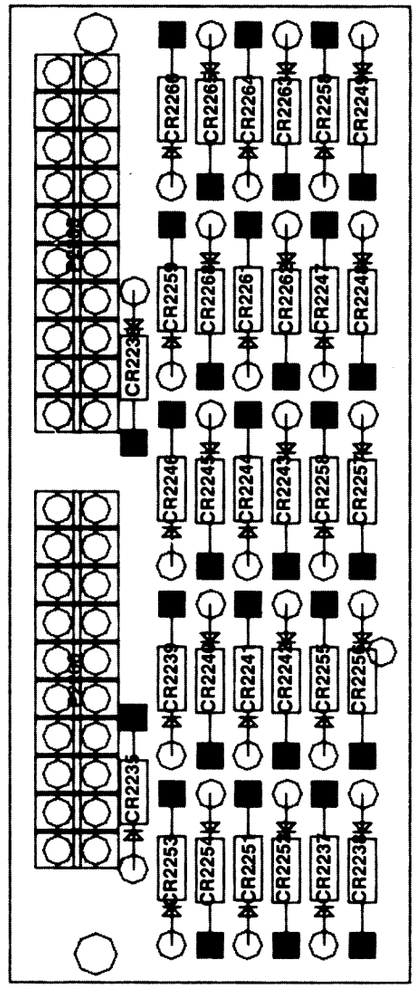

Fig. 8-15A. A18-Protection circuit board (SN B140000-up).

http://manoman.sqhill.org

VOLTAGES AND WAVEFORMS

The voltages and waveforms shown on this diagram were obtained using the recommended test equipment and test set-ups listed below.

RECOMMENDED TEST EQUIPMENT

ITEM	SPECIFICATIONS		RECOMMENDED TYPE
Oscilloscope	Frequency response Deflection factor Input impedance Sweep rate	DC to 85 MHz 5 mV to 5 V/Div 10 MΩ, 20 pF 500 ns	Tektronix 7603 or 7613 equipped with 7A15A Amplifier and 7B53A Time-Base unit, or equivalent. A 7A13 Differential Comparator was used to obtain offset.
Probe	Fast rise 10X attenuation probe compatible with the vertical amplifier of the test oscilloscope.		Tektronix P6053B, or equivalent.
Voltmeter (Non-Loading Digital Multimeter)	Input impedance Range	10 MΩ 0 to 500 V	Tektronix 7D13 Digital Multimeter (test oscilloscope must have readout system) or Tektronix DM 501 Digital Multimeter with power module, or equivalent.

VOLTAGE MEASUREMENTS

Voltage measurements on this diagram were made under the following conditions:

Set front panel controls (knob type) to mid-range.
Set VERT MODE for CHOP.
Set TRIG SOURCE for VERT MODE
Set for NON STORE condition.
No plug-in units are installed.
Voltmeter common is connected to chassis ground.

WAVEFORMS

Waveforms shown on this diagram were obtained under the following conditions:

7633 OSCILLOSCOPE UNDER TEST. Front panel controls are set the same as for voltage measurements. No plug-ins are installed.

http://manoman.sqhill.com

U2120C ¼ 7401N
U2120B ¼ 7401N
U2120A ¼ 7401N
U2120D ¼ 7401N
U2126 -0021- TIMER
Q2108
Q2112
Q2121
Q2153
Q2159
Q2188
Q2214
Q2215
Q2218
Q2223
Q2225
Q2229
Q2240
Q2284
Q2286
Q2287
Q2296
U2155C ¼ 7402N
U2155D ¼ 7402N
U2155A ¼ 7402N
U2155B ¼ 7402N
U2159 -0017- TIME SLOT COUNTER
U2180 -0018- ROW DATA SWITCH
U2185 -0014- ROW DECODER
U2190 -0018- COLUMN DATA SWITCH
U2232 -0018- ERROR LOGIC & MEMORY
U2244 -0014- COLUMN DECODER
U2250 7499 CHANNEL COUNTER
U2260 -0019- DECIMAL POINT LOGIC & CHARAC POSITION CENTER
U2270 -0013- NUMERALS
U2272 -0014- SYMBOLS
U2274 -0014- PREFIXES
U2276 -0014- LETTERS
U2278 -0014- LETTERS
U2284 -0010- FORMAT GEN
NOT USED
J2192
P2171
P2165
P2166
P2265
P2266
FROM P141 DIAG
READOUT INTENSITY FROM P1018-5 DIAG
FROM DIAG
FROM PCB
ROW ANALOG DATA
COLUMN ANALOG DATA
E AXIS INHIBIT TO P59 DIAG
E READOUT TO J1103 DIAG
X/Y INHIBIT TO J1154 DIAG
STROBE TO U2232 PIN 15
READOUT TO J2594 DIAG
READOUT TO J508 DIAG
CHARACTER SCAN
CHARACTER HEIGHT
VERTICAL SEPARATION
X DEFLECTION
Y DEFLECTION
END OF FRAME PULSE
TRIGGER
READY
IDENTIFY
ROW MATCH
COLUMN MATCH
JUMP COMMAND
END OF WORD
DISPLAY SKIP
ROW DIGITAL DATA
COLUMN DIGITAL DATA
TIME SLOT PULSES
CHANNEL ADDRESS CODE
DECIMAL
SPACE INSTRUCTION
TIME SLOT PULSES TO P67 DIAG
EFF. SN B140000-UP
A16 PROTECTION CIRCUIT BOARD
A16 READOUT SYSTEM BOARD
SEE PARTS LIST FOR SEMICONDUCTOR TYPES.
7493 VCC +5V PIN 14 GND PIN 7
REV E, FEB 1976
Readout System
9

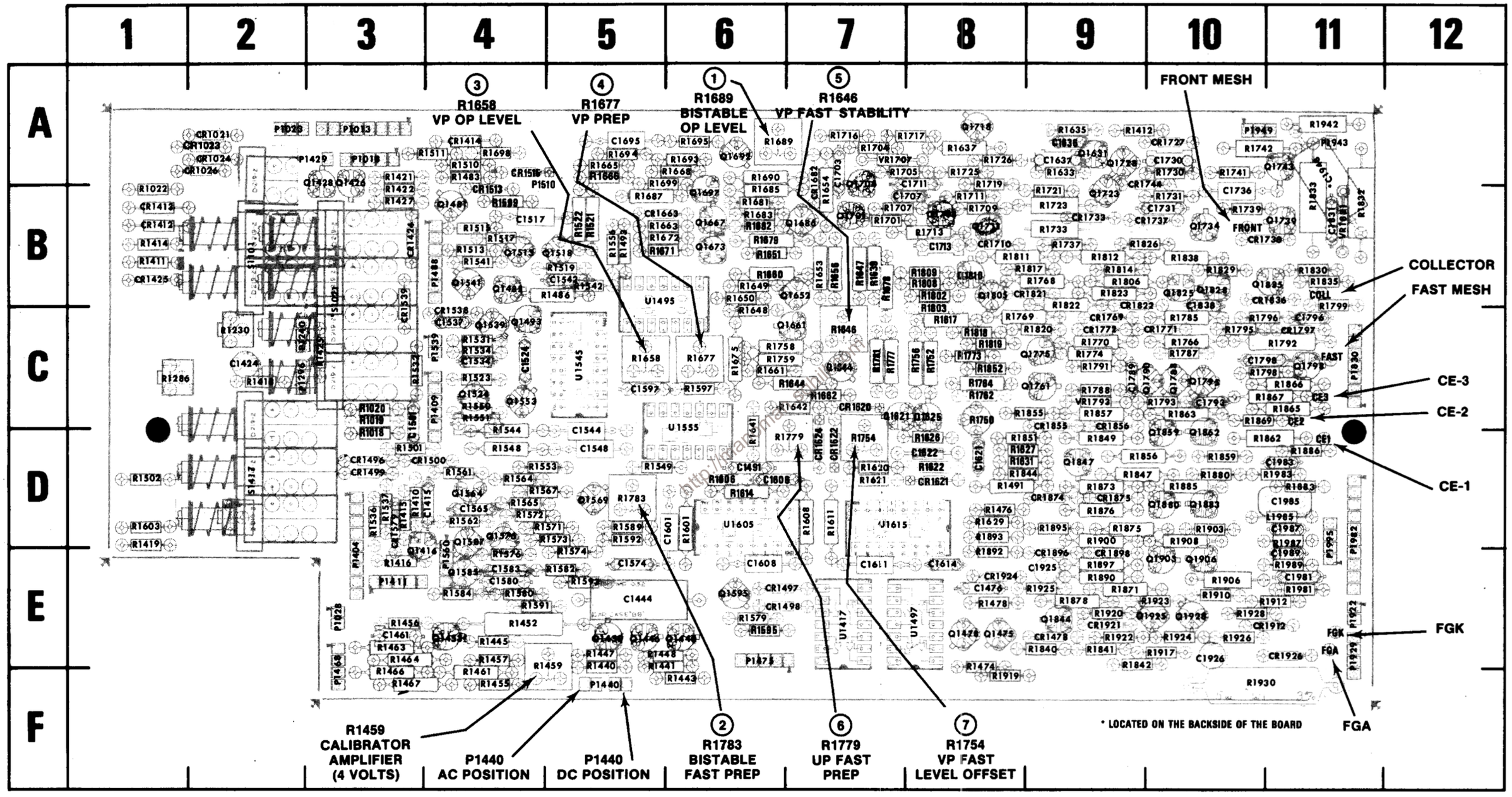

A14 Storage board SN B 149999 — BELOW is located on back of diagram 10.

Figure 8-16A. A14-Storage board, SN B150000 — UP.

CKT NO	GRID LOC
C1415	4D
C1424	2C
C1444	5E
C1461	3E
C1476	8E
C1491	6D
C1501	3C
C1517	4B
C1524	4C
C1534	4C
C1537	4C
C1542	5B
C1544	5D
C1548	5D
C1565	4D
C1574	5E
C1580	4E
C1583	4E
C1597	5C
C1601	6D
C1606	6D
C1608	6E
C1611	7E
C1614	8E
C1621	8D
C1622	8D
C1636	9A
C1637	9A
C1695	5A
C1703	7A
C1707	8B
C1711	8A
C1713	8B
C1730	10A
C1731	10B
C1736	10B
C1789	9B
C1793	10C
C1796	11C
C1798	10C
C1831	11B
C1838	10B
C1925	9E
C1926	10E
C1948	11A
C1981	11E
C1983	11D
C1985	11D
C1987	11D
C1989	11E
CR1021	2A
CR1023	2A
CR1024	2A
CR1026	2A
CR1412	1B
CR1413	1B
CR1414	4A
CR1424	3B
CR1425	1B
CR1478	9E
CR1496	3D
CR1497	6E
CR1498	6E
CR1499	3D
CR1500	4D
CR1513	4B
CR1515	4A
CR1538	4C
CR1539	3B
CR1579	3D
CR1620	7C
CR1621	8D
CR1622	7D
CR1624	7D
CR1663	5B
CR1682	7A
CR1710	8B
CR1727	10A
CR1733	9B
CR1737	10B
CR1738	10B
CR1744	10A
CR1769	9C
CR1771	10C
CR1772	9C
CR1797	11C
CR1821	9B
CR1822	9B
CR1836	11B
CR1855	9C
CR1856	9C
CR1874	9D
CR1875	9D
CR1896	9E
CR1898	9E
CR1912	11E
CR1921	9E
CR1924	8E
CR1926	11E
P1013	3A
P1018	3A
P1023	3E
P1240	2C
P1296	2C
P1404	3E
P1409	4C
P1411	3E
P1429	3A
P1440	5F
P1468	3F
P1475	6E
P1488	4B
P1510	4A
P1539	4C
P1560	4E
P1830	11C
P1922	11E
P1929	11E
P1943	11A
P1949	10A
P1982	11E
P1995	11D
Q1416	4E
Q1426	3A
Q1428	3A
Q1440	6E
Q1446	5E
Q1450	5E
Q1453	4E
Q1475	8E
Q1478	8E
Q1481	4B
Q1485	4B
Q1493	4C
Q1513	4B
Q1518	5B
Q1524	4C
Q1539	4C
Q1541	4B
Q1553	4C
Q1564	4D
Q1569	5D
Q1576	4D
Q1585	4E
Q1587	4D
Q1595	6E
Q1621	7C
Q1625	8C
Q1631	9A
Q1644	7C
Q1652	7B
Q1661	7C
Q1667	6B
Q1673	6B
Q1686	7B
Q1692	6A
Q1697	6B
Q1701	7B
Q1704	7A
Q1708	8B
Q1711	8B
Q1718	8A
Q1723	9B
Q1728	9A
Q1734	10B
Q1739	11B
Q1743	11A
Q1761	9C
Q1775	9C
Q1788	10C
Q1790	10C
Q1795	10C
Q1798	11C
Q1805	8B
Q1810	8B
Q1825	9B
Q1828	9B
Q1835	11B
Q1844	9E
Q1847	9D
Q1859	10D
Q1862	10D
Q1880	10D
Q1883	10D
Q1903	10E
Q1906	10E
Q1925	10E
Q1928	10E
R1018	3D
R1019	3C
R1021	3C
R1022	1B
R1230	2C
R1286	1C
R1410	3D
R1411	1B
R1412	9A
R1414	1B
R1415	3D
R1416	3E
R1418	2C
R1419	1D
R1421	3A
R1422	3B
R1425	3C
R1427	3B
R1440	5E
R1441	5E
R1443	6F
R1445	4E
R1447	5E
R1448	5E
R1452	4E
R1455	4F
R1456	3E
R1457	4E
R1459	5E
R1461	4F
R1463	3E
R1464	3E
R1466	3F
R1467	3F
R1474	8E
R1476	8D
R1478	8E
R1483	4A
R1486	5B
R1491	8D
R1493	5B
R1501	3D
R1502	1D
R1510	4A
R1511	4A
R1513	4B
R1515	4B
R1517	4B
R1519	5B
R1521	5B
R1522	5B
R1523	4C
R1531	4C
R1532	3C
R1534	4C
R1536	3D
R1537	3D
R1541	4B
R1542	5B
R1544	4D
R1548	4D
R1549	5D
R1550	4C
R1551	4C
R1553	4D
R1556	5B
R1561	4D
R1562	4D
R1564	4D
R1565	4D
R1567	4D
R1571	5D
R1572	4D
R1573	5D
R1574	5E
R1576	4E
R1579	6E
R1580	4E
R1582	5E
R1584	4E
R1589	5D
R1591	4E
R1592	5D
R1593	5E
R1595	6E
R1597	6C
R1599	4B
R1601	6D
R1603	1D
R1606	6D
R1608	7D
R1611	7D
R1614	6D
R1617	8C
R1620	7D
R1621	7D
R1622	8D
R1626	8D
R1627	8D
R1629	8D
R1631	8D
R1633	9A
R1635	9A
R1637	8A
R1639	7B
R1641	6D
R1642	7C
R1644	7C
R1646	7C
R1647	7B
R1648	6C
R1649	6B
R1650	6B
R1651	6B
R1653	7B
R1654	7B
R1656	7B
R1658	5C
R1660	6B
R1661	6C
R1662	7C
R1663	5B
R1665	5A
R1666	5A
R1668	6A
R1671	5B
R1672	5B
R1675	6C
R1677	6C
R1678	7B
R1679	6B
R1681	6B
R1682	6B
R1683	6B
R1685	6B
R1687	5B
R1689	6A
R1690	6A
R1693	6A
R1694	5A
R1695	6A
R1698	4A
R1699	5A
R1701	7B
R1704	7A
R1705	7A
R1707	7B
R1709	8B
R1711	8B
R1713	8B
R1716	7A
R1717	8A
R1719	8A
R1721	9B
R1723	9B
R1725	8A
R1726	8A
R1730	10A
R1731	10B
R1733	9B
R1737	9B
R1739	10B
R1741	10A
R1742	10A
R1750	8C
R1752	8C
R1754	7D
R1756	8C
R1758	6C
R1759	6C
R1762	8C
R1764	8C
R1766	10C
R1768	9B
R1769	8C
R1770	9C
R1773	8C
R1774	8C
R1777	7C
R1779	7D
R1781	7C
R1783	5D
R1785	10C
R1787	10C
R1788	9C
R1791	9C
R1792	11C
R1793	10C
R1795	10C
R1796	10C
R1798	10C
R1799	11B
R1802	8B
R1803	8C
R1806	9B
R1808	8B
R1809	8B
R1811	8B
R1812	9B
R1814	9B
R1817	9B
R1819	8C
R1820	9C
R1822	9B
R1823	9B
R1826	9B
R1829	10B
R1830	11B
R1832	11B
R1833	11B
R1835	11B
R1838	10B
R1840	9E
R1841	9E
R1842	9E
R1844	8D
R1847	9D
R1849	9D
R1851	8D
R1852	8C
R1855	9C
R1856	9D
R1857	9C
R1859	10D
R1862	10D
R1863	10C
R1865	11C
R1866	11C
R1867	11C
R1869	10C
R1871	9E
R1873	9D
R1875	9D
R1876	9D
R1878	9E
R1880	10D
R1883	11D
R1885	10D
R1886	11D
R1890	9E
R1892	8E
R1893	8D
R1895	9D
R1897	9E
R1900	9D
R1903	10D
R1906	10E
R1908	10D
R1910	10E
R1912	11E
R1917	10E
R1919	8F
R1920	9E
R1922	9E
R1923	10E
R1924	10E
R1925	9E
R1926	10E
R1928	10E
R1930	10F
R1942	11A
R1981	11E
R1983	11D
R1987	11D
R1989	11E
S1021	3B
S1101	2B
S1417	2D
U1417	7E
U1495	5B
U1497	8E
U1545	5C
U1555	6C
U1605	6D
U1615	7D
VR1707	7A
VR1793	9C
VR1831	11B

http://manuals.skill.com

http://manoman.sqhill.com

PERSISTENCE
SAVE INTEN
REMOTE ERASE
(MAN) ERASE
PERIODIC
(PERIODIC) MAX
PERIODIC
AUTO ERASE
AUX SWEEP/ SWEEP GATE FROM P59A-2 DIAG
HOLDOFF GATE/ X-Y HOLDOFF GATE FROM P59B-2 DIAG
A17 STORAGE MODE SWITCH BOARD
FAST
VAR PERSIST
BI STABLE
NON STORE
STORE
SAVE
MULTI
SINGLE SWEEP LOGIC FROM P60-3, DIAG
SINGLE SWEEP RESET TO/FROM P60-1, DIAG
FAST TO
VP TO
VP (+15V) TO
NS TO
NS (+15V) TO
SAVE TO
SAVE' TO
TSFR TO
TSFR TO
MULTI TO
MULTI TO
ERASE TO
ERASE TO
PREP TO R1649, R1671
SAVE INTEN TO CR1921
PUMP TO R1773, R1678
SWP+TSFR TO U1615A, R1762
10 KHz CLOCK TO C1697
CLOCK TO R1476, R1491, U1615A
SWEEP LOCKOUT TO P59-4 DIAG
FROM/TO P362 DIAG
LIMIT COMMAND
TO GRAT ILLUM R1095 DIAG
TO GRAT LIGHTS DIAG
STORAGE LEVEL
GAIN TO/FROM P1519 DIAG
TO/FROM P1283 DIAG
FRONT MESH
FAST MESH
COLLECTOR MESH
FRONT
FAST
COLL
CE 3
CE 2
CE 1
FGA
FGK
VP FAST STABILITY
VP OP LEVEL
VP FAST LEVEL OFFSET
BS FAST PREP
FAST LEVEL CENTER
BI STABLE OP LEVEL
READOUT INTENSITY
READOUT INTENSITY TO P1282-9 DIAG
CALIB AMPL (4 VOLTS)
CALIBRATOR
4V
0.4V
40mV
GND
SEE P1018 READOUT INTENSITY TO P1218-5 DIAG
A14 PARTIAL STORAGE BOARD SEE
SEE PARTS LIST FOR SEMICONDUCTOR TYPES.
REV. B, OCT. 1975
7633
STORAGE SYSTEM 10

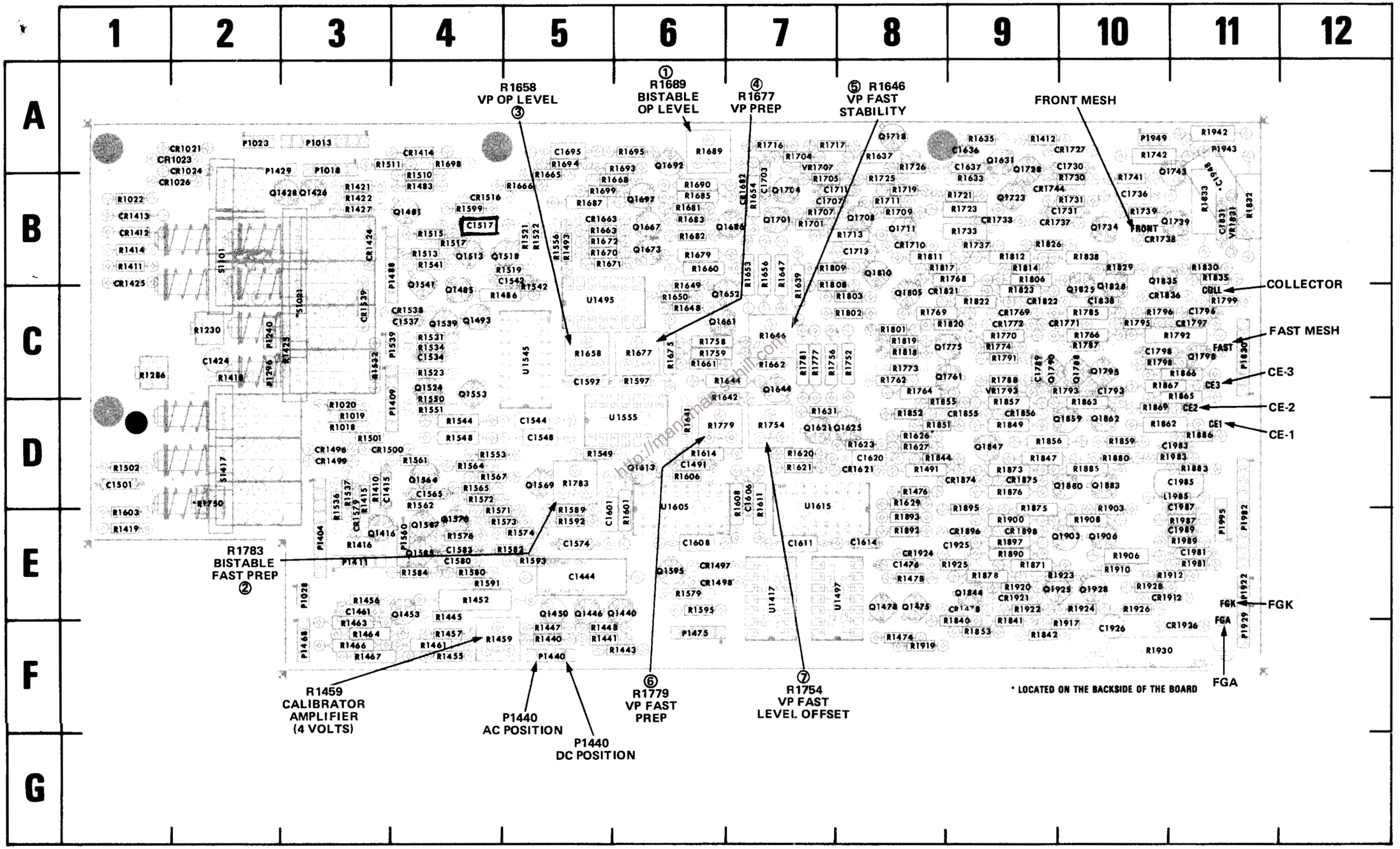

Figure 8-16B. A14-Storage board, SN B149999 — BELOW.

CKT NO	GRID LOC
C1415	3D
C1424	2C
C1444	5E
C1461	3E
C1476	8E
C1491	6D
C1501	1D
C1517	4B
C1534	4C
C1537	4C
C1542	5B
C1544	5D
C1548	5D
C1565	4D
C1574	5E
C1580	4E
C1583	4E
C1597	5C
C1601	5E
C1606	7D
C1608	6E
C1611	7E
C1614	8E
C1620	8D
C1636	9A
C1637	9A
C1695	5A
C1703	7B
C1707	7B
C1711	7B
C1713	8B
C1730	10A
C1731	10B
C1736	10B
C1789	9C
C1793	10C
C1796	11C
C1798	10C
C1831	11B
C1838	10C
C1925	9E
C1926	10F
C1935	11D
C1948	11B
C1981	11E
C1983	11D
C1987	11E
C1989	11E
CR1021	2A
CR1023	2A
CR1024	2A
CR1026	2A
CR1412	1B
CR1413	1B
CR1414	4A
CR1424	3B
CR1425	1B
CR1478	9E
CR1496	3D
CR1497	6E
CR1498	6E
CR1499	3D
CR1500	3D
CR1516	4B
CR1538	4C
CR1539	3C
CR1579	3E
CR1621	8D
CR1663	5B
CR1682	7B
CR1710	8B
CR1727	10A
CR1733	9B
CR1737	9B
CR1738	10B
CR1744	9B
CR1769	9C
CR1771	10C
CR1772	9C
CR1797	11C
CR1821	8C
CR1822	9C
CR1836	10C
CR1855	9D
CR1856	9D
CR1874	9D
CR1875	9D
CR1898	9E
CR1896	9E
CR1912	10E
CR1921	9E
CR1924	8E
CR1926	11F
L1985	11D
P1013	3A
P1018	3A
P1023	2A
P1409	3D
P1028	3E
P1404	3E
P1411	3E
P1429	2A
P1440	5F
P1468	3F
P1475	6F
P1488	3B
P1539	3C
P1560	4E
P1830	11C
P1922	11E
P1929	11F
P1943	11A
P1982	11E
P1995	11E
Q1416	3E
Q1426	3B
Q1428	2B
Q1440	6E
Q1446	5E
Q1450	5E
Q1453	4E
Q1475	8E
Q1478	8E
Q1481	4B
Q1485	4C
Q1493	4C
Q1513	4B
Q1518	4B
Q1524	4C
Q1539	4C
Q1541	4C
Q1553	4C
Q1564	4D
Q1569	5D
Q1576	4E
Q1585	4E
Q1587	4E
Q1595	6E
Q1613	6D
Q1621	7D
Q1625	8D
Q1631	9A
Q1644	7C
Q1652	6C
Q1661	6C
Q1667	6B
Q1673	6B
Q1686	7B
Q1692	6A
Q1697	6B
Q1701	7B
Q1704	7B
Q1708	8B
Q1711	8B
Q1718	8A
Q1728	9B
Q1723	9B
Q1734	10B
Q1739	11B
Q1743	11B
Q1761	8C
Q1775	8C
Q1788	10C
Q1790	9C
Q1795	10C
Q1798	11C
Q1805	8C
Q1810	8B
Q1825	10C
Q1828	10C
Q1835	10C
Q1844	9E
Q1847	9D
Q1859	10D
Q1862	10D
Q1880	10D
Q1883	10D
Q1903	10E
Q1906	10E
Q1925	9E
Q1928	10E
R1018	3D
R1019	3D
R1020	3D
R1022	1B
R1230	1C
R1240	2C
R1286	1C
R1296	2C
R1410	3D
R1411	1B
R1412	9A
R1416	3E
R1414	1B
R1415	3D
R1418	2C
R1419	1E
R1421	3B
R1422	3B
R1425	2C
R1427	3B
R1440	5F
R1441	5F
R1443	6F
R1445	4E
R1447	5F
R1448	5F
R1453	4E
R1455	4F
R1456	3E
R1457	4F
R1459	4F
R1461	4F
R1463	3F
R1464	3F
R1466	3F
R1467	3F
R1474	8F
R1476	8D
R1478	8E
R1483	4B
R1486	4C
R1491	8D
R1493	5B
R1501	3D
R1502	1D
R1510	4B
R1511	3A
R1513	4B
R1515	4B
R1517	4B
R1521	5B
R1522	5B
R1523	4C
R1519	5B
R1531	4C
R1532	3C
R1534	4C
R1536	3E
R1537	3D
R1541	4B
R1542	5C
R1544	4D
R1548	4D
R1549	5D
R1550	4D
R1551	4D
R1553	4D
R1556	5B
R1561	4D
R1562	4D
R1564	4D
R1565	4D
R1567	4D
R1571	4E
R1572	4D
R1573	4E
R1574	5E
R1576	4E
R1579	6E
R1580	4E
R1582	5E
R1584	4E
R1589	5E
R1591	4E
R1592	5E
R1593	5E
R1595	6E
R1597	6C
R1599	4B
R1601	6E
R1603	1E
R1606	6D
R1608	7D
R1611	7D
R1614	6D
R1620	7D
R1621	7D
R1623	8D
R1626	8D
R1627	8D
R1629	8D
R1631	7D
R1633	9B
R1635	9A
R1637	8A
R1639	7C
R1641	6D
R1642	6D
R1644	6C
R1646	7C
R1647	7B
R1648	6C
R1649	6C
R1650	6C
R1653	7B
R1654	7B
R1656	7B
R1658	5C
R1660	6B
R1661	6C
R1662	7C
R1663	5B
R1665	5B
R1666	5B
R1668	5B
R1670	5B
R1671	5B
R1672	5B
R1675	6C
R1677	6C
R1679	6B
R1681	6B
R1682	6B
R1683	6B
R1685	6B
R1687	5B
R1689	6A
R1690	6B
R1693	6A
R1694	5A
R1695	6A
R1698	4A
R1699	5B
R1701	7B
R1704	7A
R1705	7B
R1707	7B
R1709	8B
R1711	8B
R1713	8B
R1716	7A
R1717	7A
R1719	8B
R1721	9B
R1723	9B
R1725	8B
R1730	10B
R1726	8A
R1731	10B
R1733	9B
R1737	9B
R1739	10B
R1741	10B
R1742	10A
R1750	2D
R1752	8C
R1754	7D
R1756	7C
R1758	6C
R1759	6C
R1762	8C
R1764	8C
R1766	10C
R1768	9B
R1769	8C
R1770	9C
R1773	8C
R1774	9C
R1777	7C
R1779	6D
R1781	7C
R1783	5D
R1785	10C
R1787	10C
R1788	9C
R1791	9C
R1792	11C
R1793	10C
R1795	10C
R1796	10C
R1798	10C
R1799	11C
R1801	8C
R1802	8C
R1803	8C
R1806	9B
R1808	7C
R1809	7B
R1811	8B
R1812	9B
R1814	9B
R1818	8C
R1817	8B
R1819	8C
R1820	8C
R1822	9C
R1823	9C
R1826	9B
R1829	10B
R1830	11B
R1832	11B
R1833	11B
R1835	11B
R1838	10B
R1840	9F
R1841	9F
R1842	9F
R1844	8D
R1847	9D
R1849	9D
R1851	8D
R1852	8D
R1853	9F
R1855	8D
R1856	9D
R1857	9D
R1859	10D
R1862	10D
R1863	10D
R1865	11D
R1866	11C
R1867	10C
R1869	10D
R1871	9E
R1873	9D
R1875	9E
R1876	9D
R1878	9E
R1880	10D
R1883	11D
R1885	10D
R1886	11D
R1890	9E
R1892	8E
R1893	8E
R1895	9E
R1897	9E
R1900	9E
R1903	10E
R1908	11E
R1906	10E
R1910	10E
R1912	10E
R1917	10F
R1919	8F
R1920	9E
R1922	9E
R1923	9E
R1924	10E
R1925	9E
R1926	10E
R1928	10E
R1930	10F
R1942	11A
R1949	10A
R1981	11E
R1983	11D
R1987	11E
R1989	11E
S1021	3C
S1101	2B
S1417	2D
U1417	7E
U1495	5C
U1497	7E
U1545	5C
U1555	6D
U1605	6E
U1615	7D
VR1707	7A
VR1793	9C
VR1831	11B

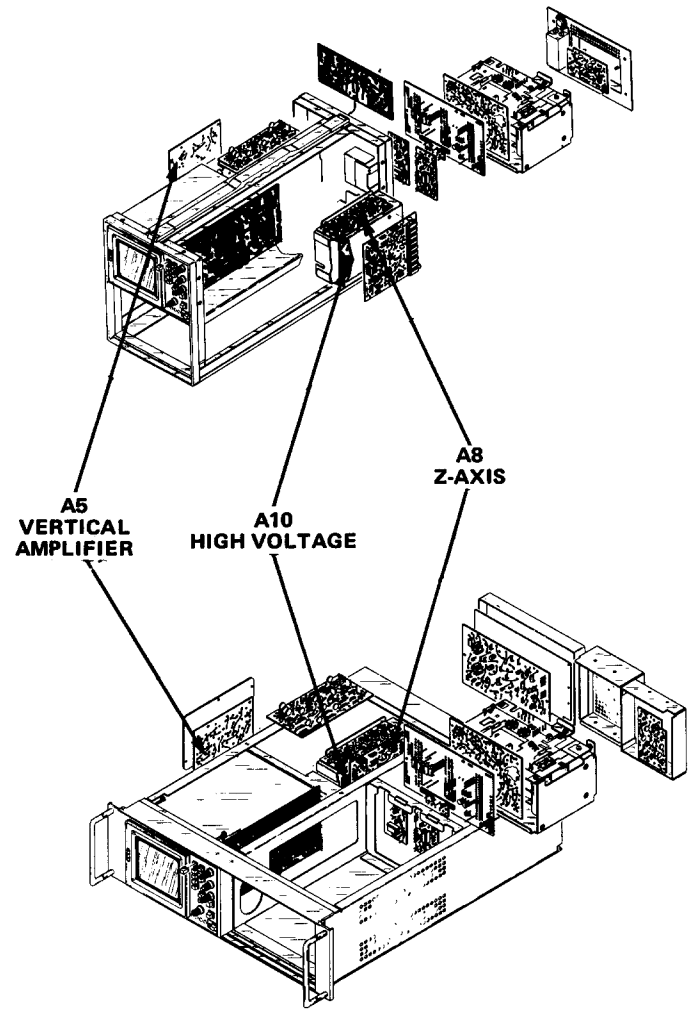

http://manomano.com

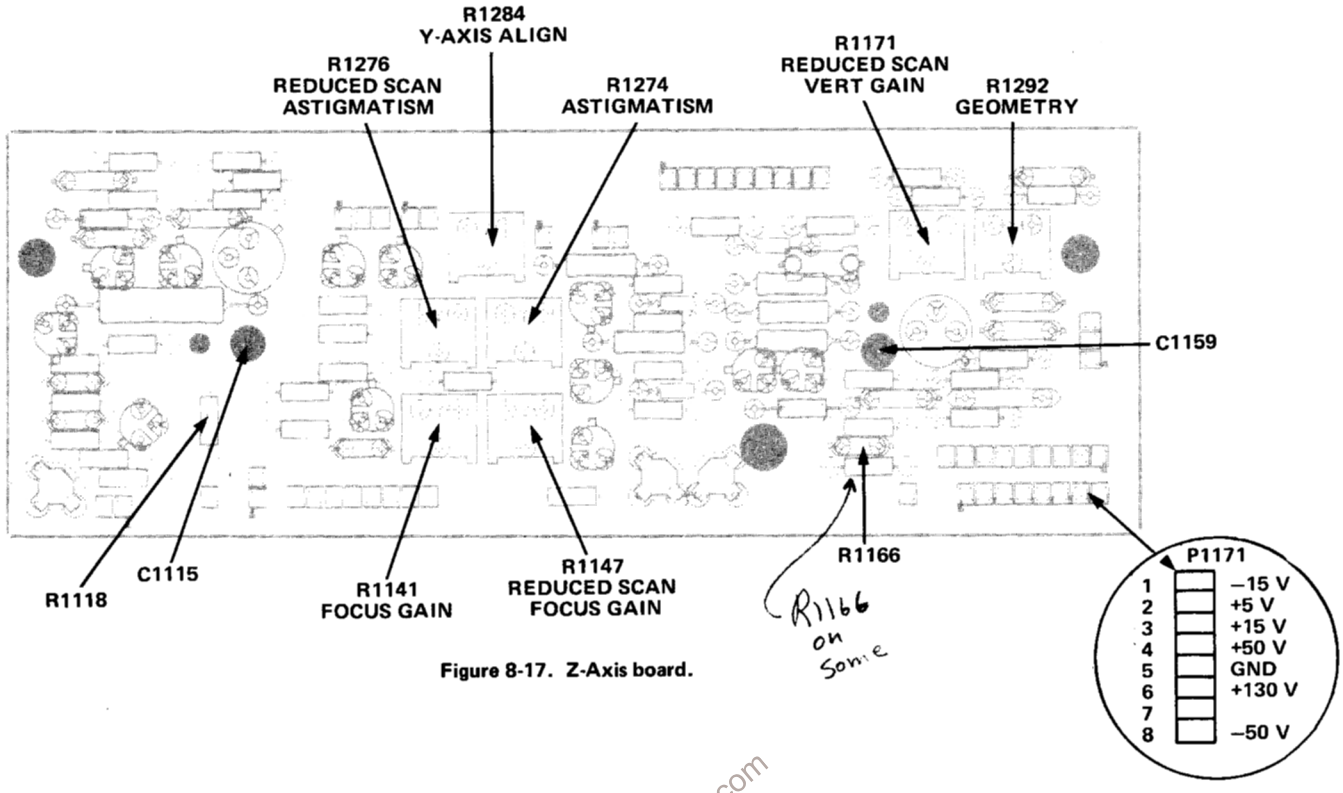

Figure 8-17. Z-Axis board.

http://manoman.sqhill.com

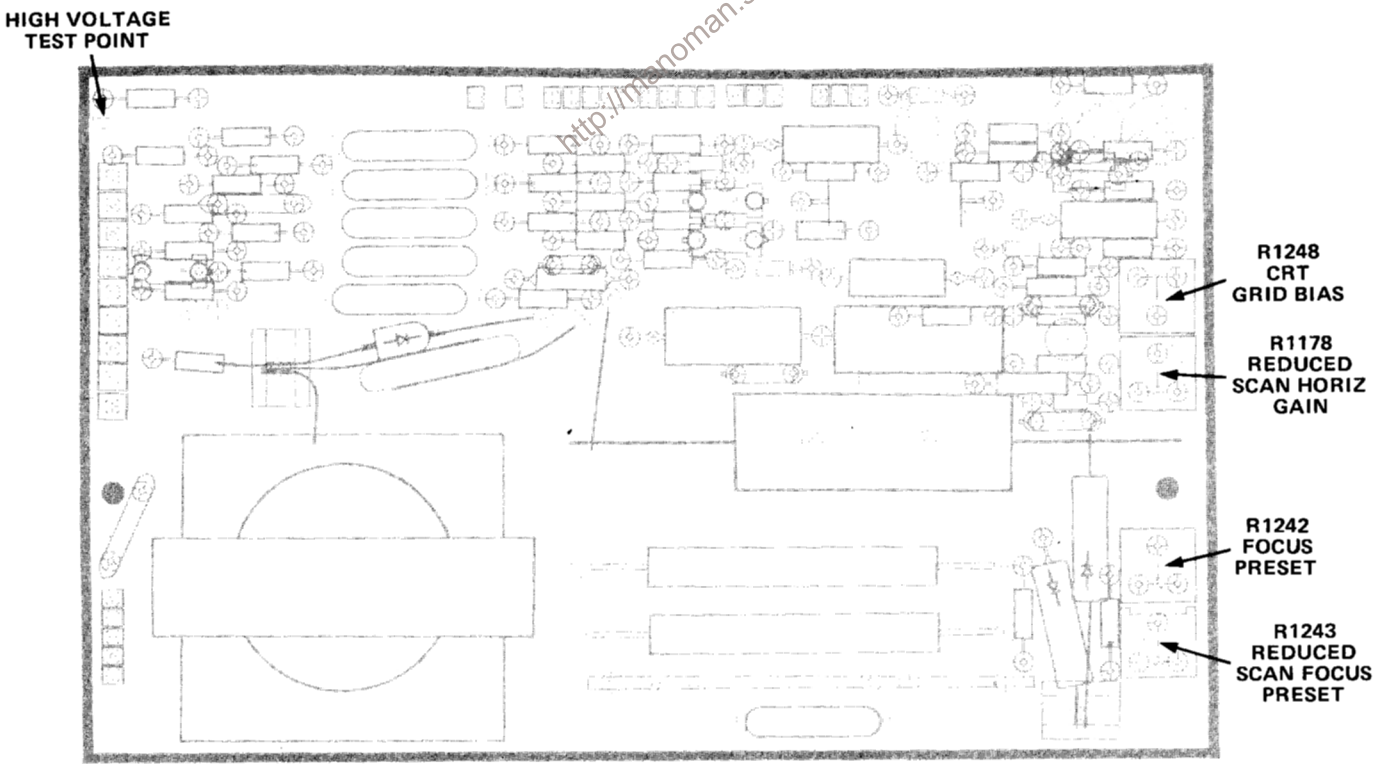

Figure 8-18. High-Voltage board.

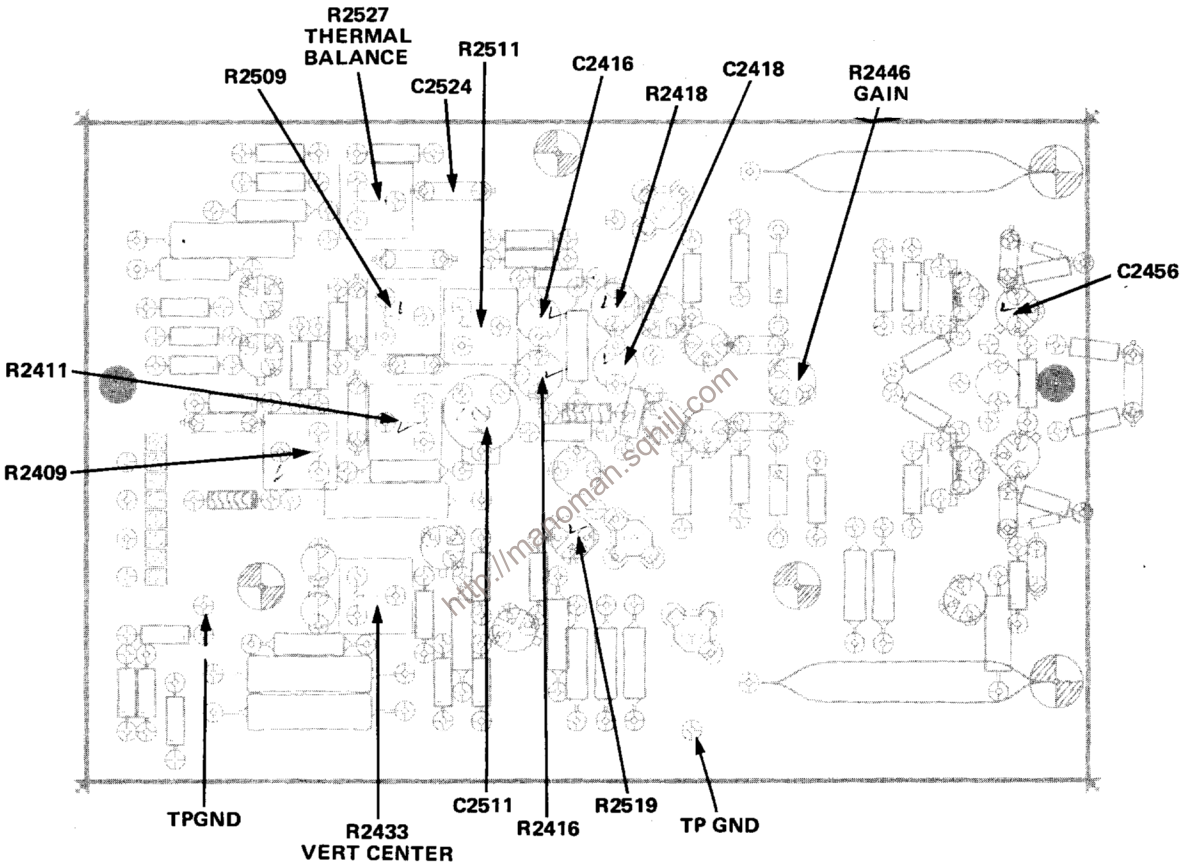

http://manoman.sqhill.com

Figure 8-19. Vertical Amplifier board.

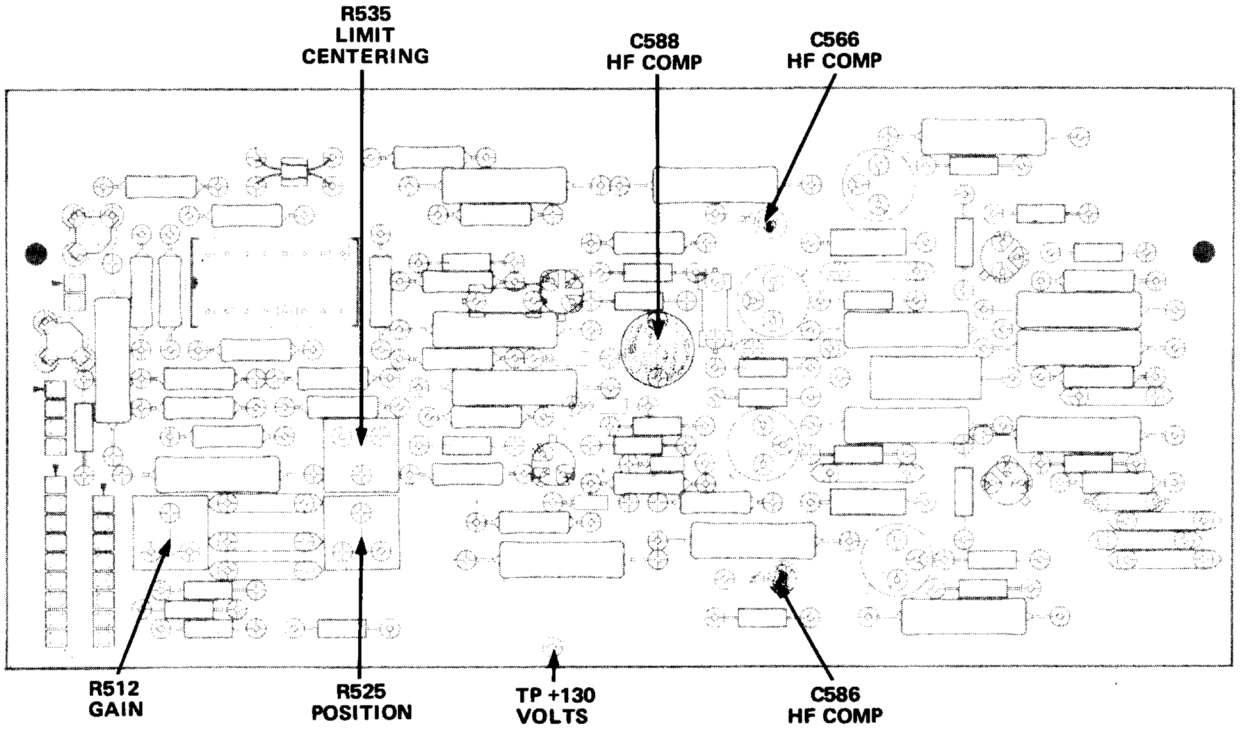

Figure 8-20. Horizontal Amplifier board.

http://manoman.sqhill.com

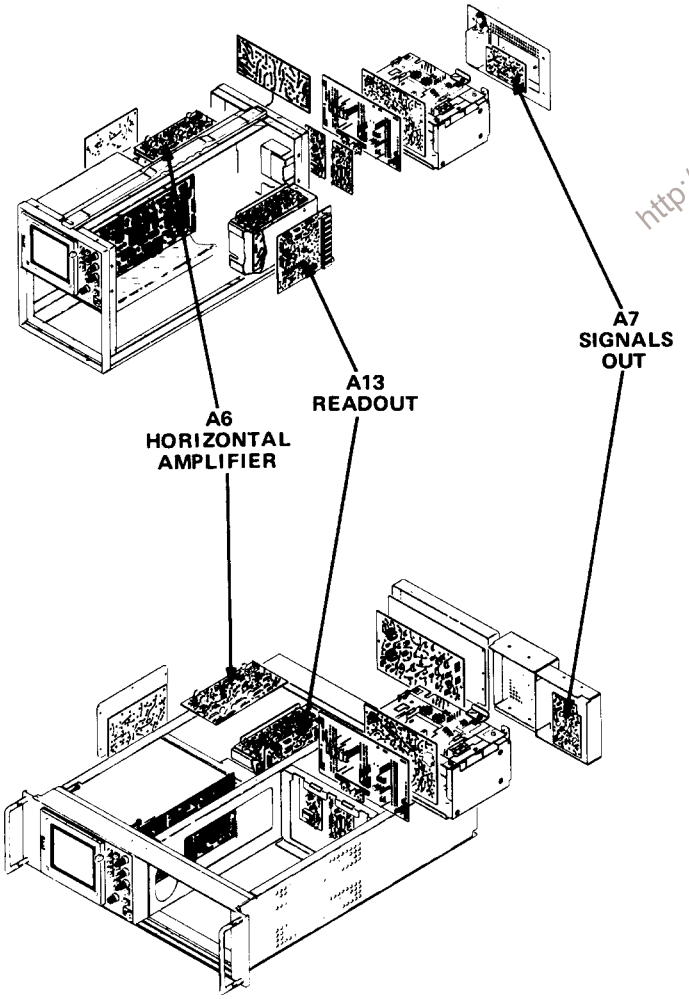

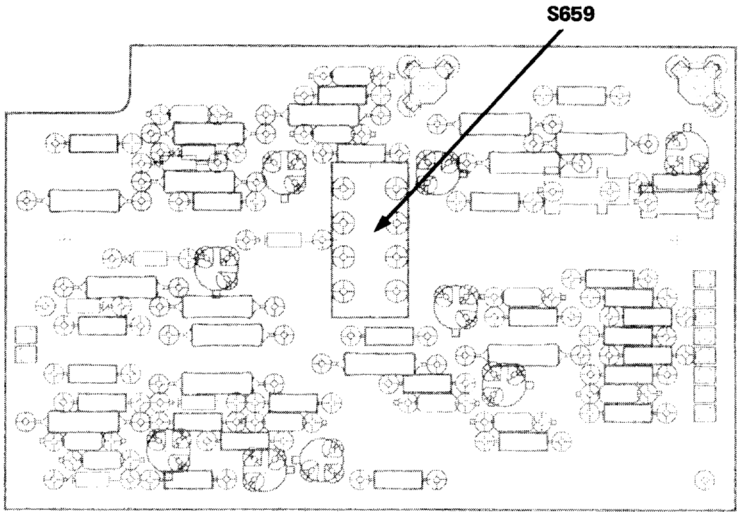

Figure 8-22. Signals Out board.

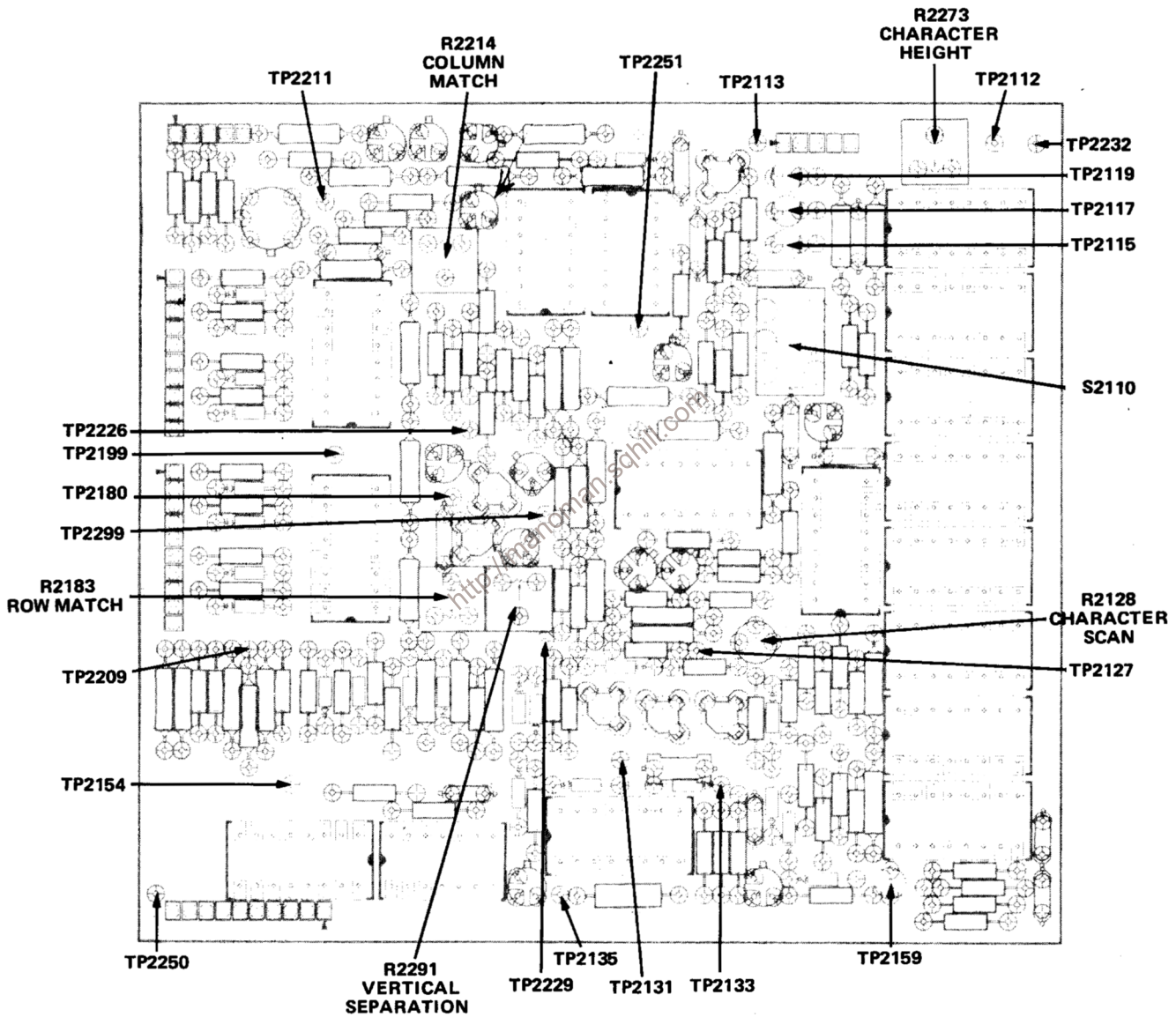

Figure 8-21. Readout board.

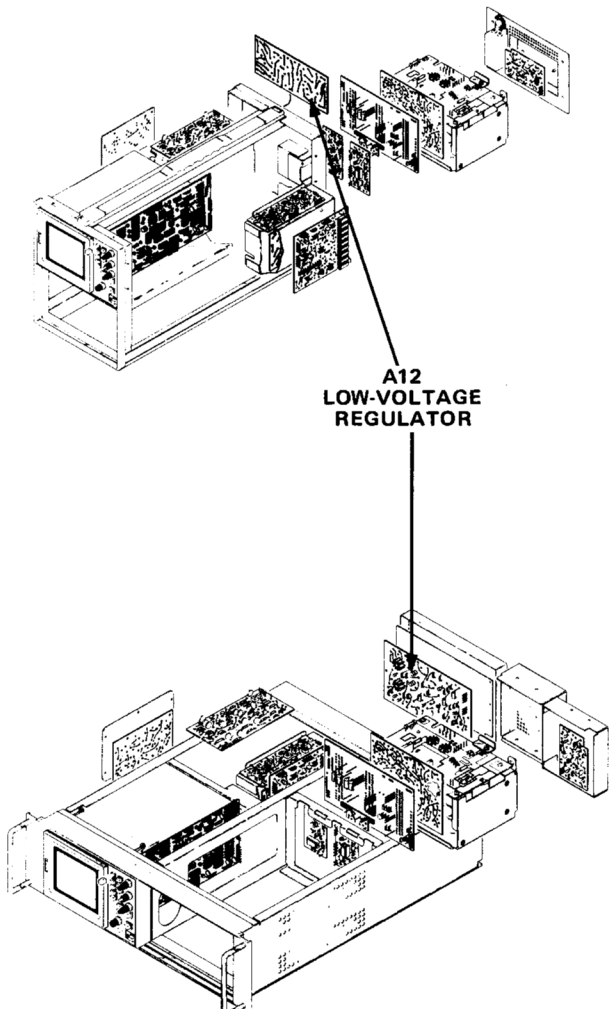

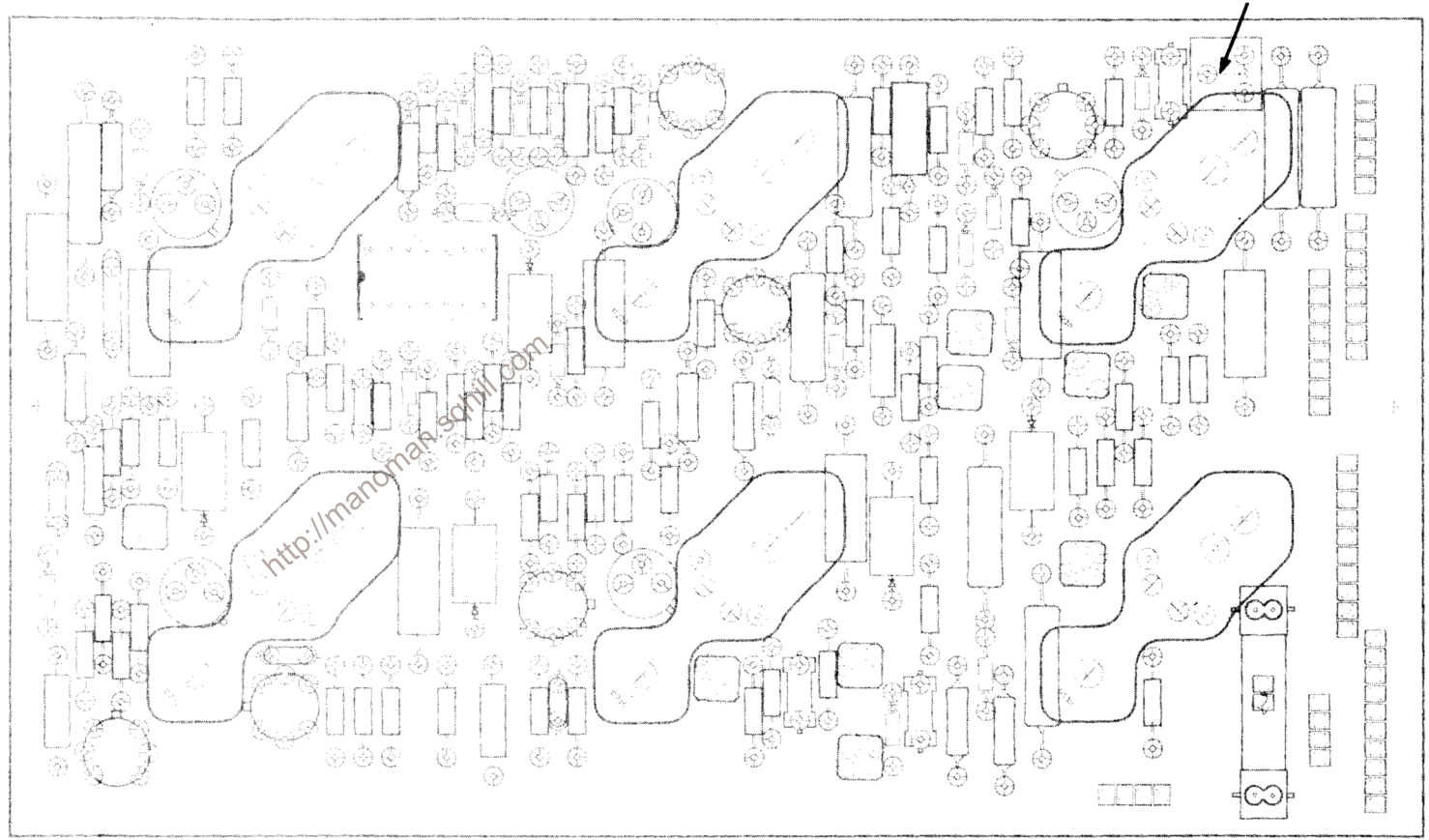

http://manoman.sohil.com

Figure 8-23. Low-Voltage Regulator board.

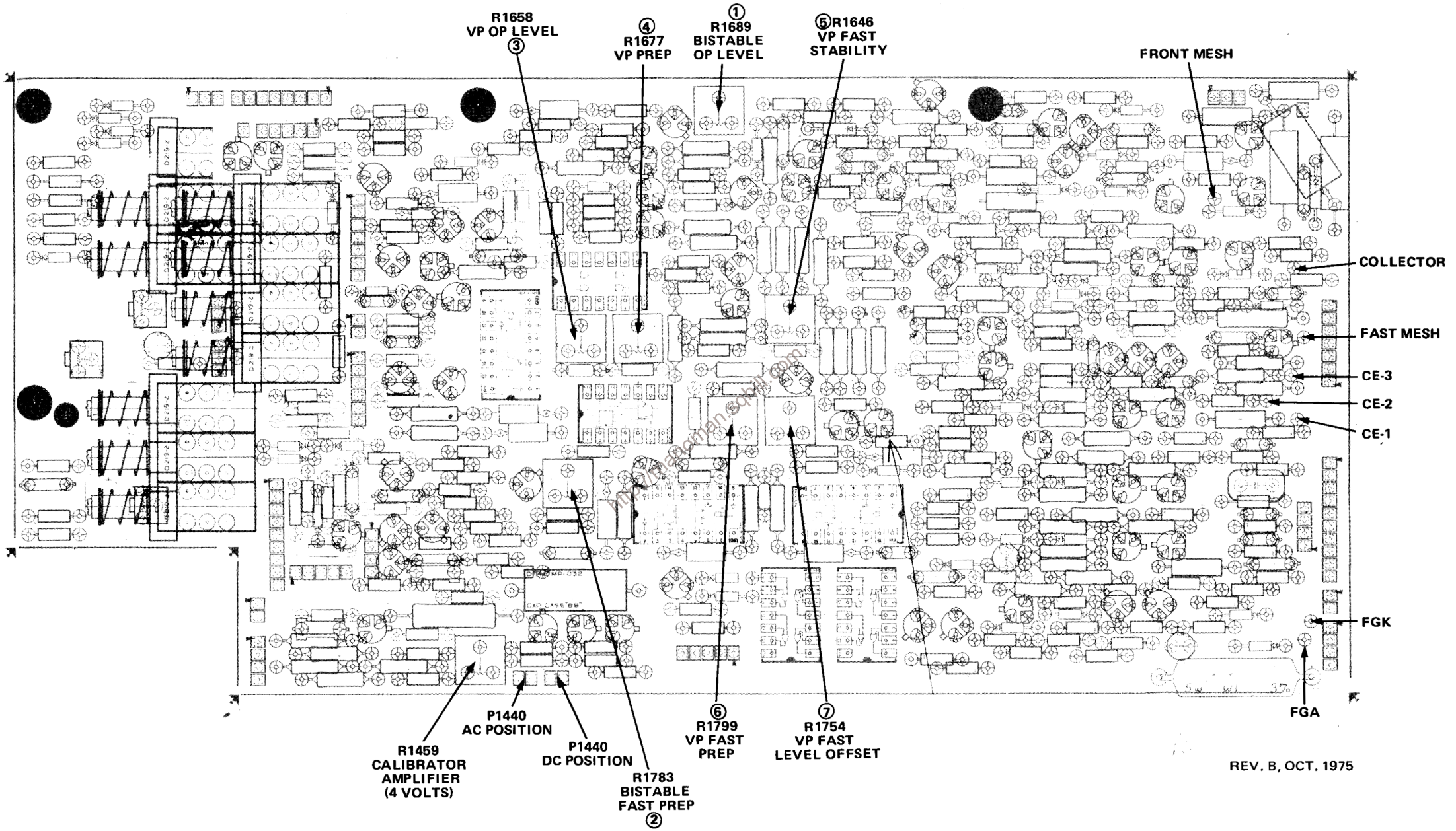

Figure 8-24. Storage board.

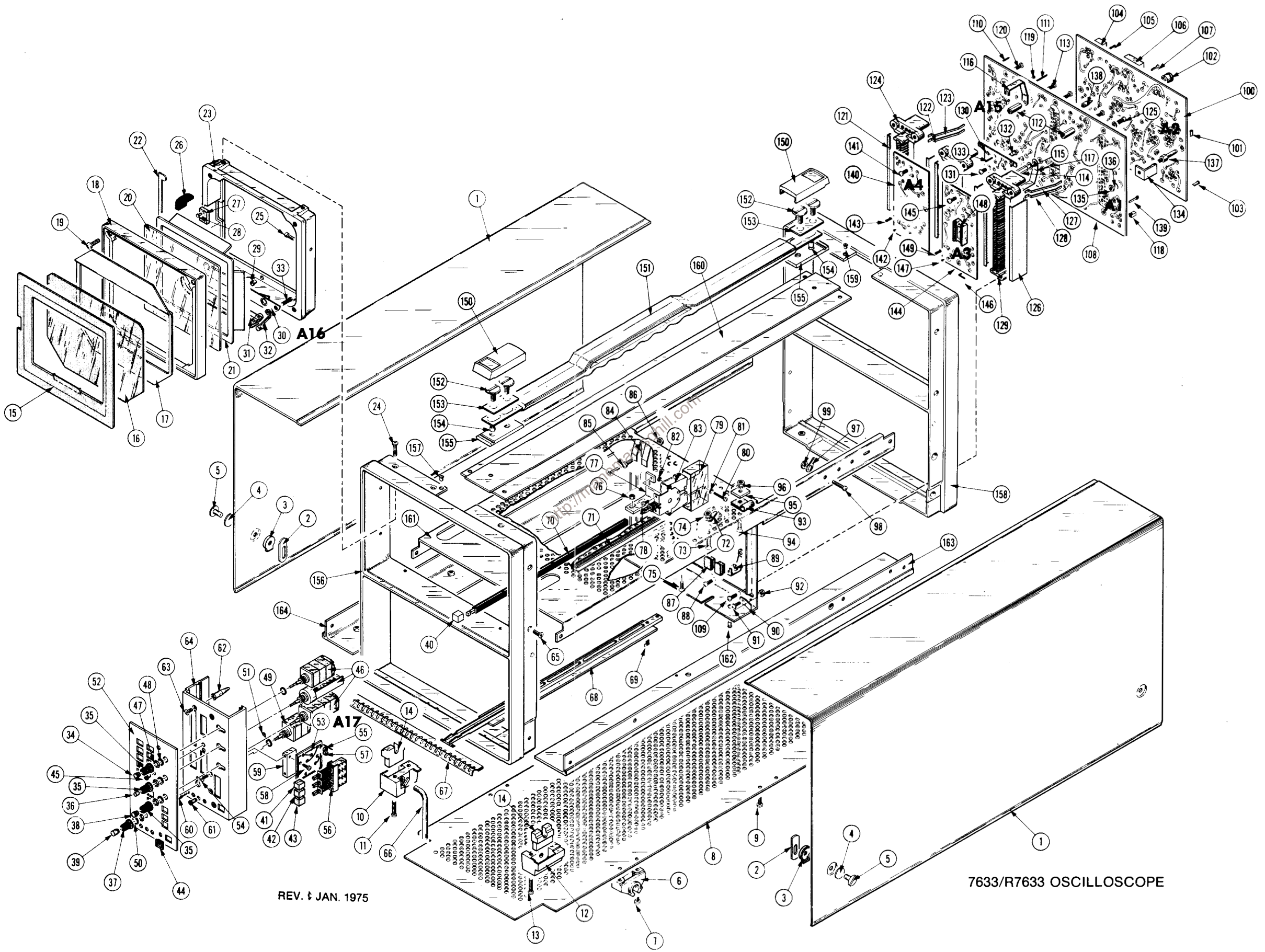
A16
A15
A4
A3
A17
REV. E JAN. 1975
7633/R7633 OSCILLOSCOPE

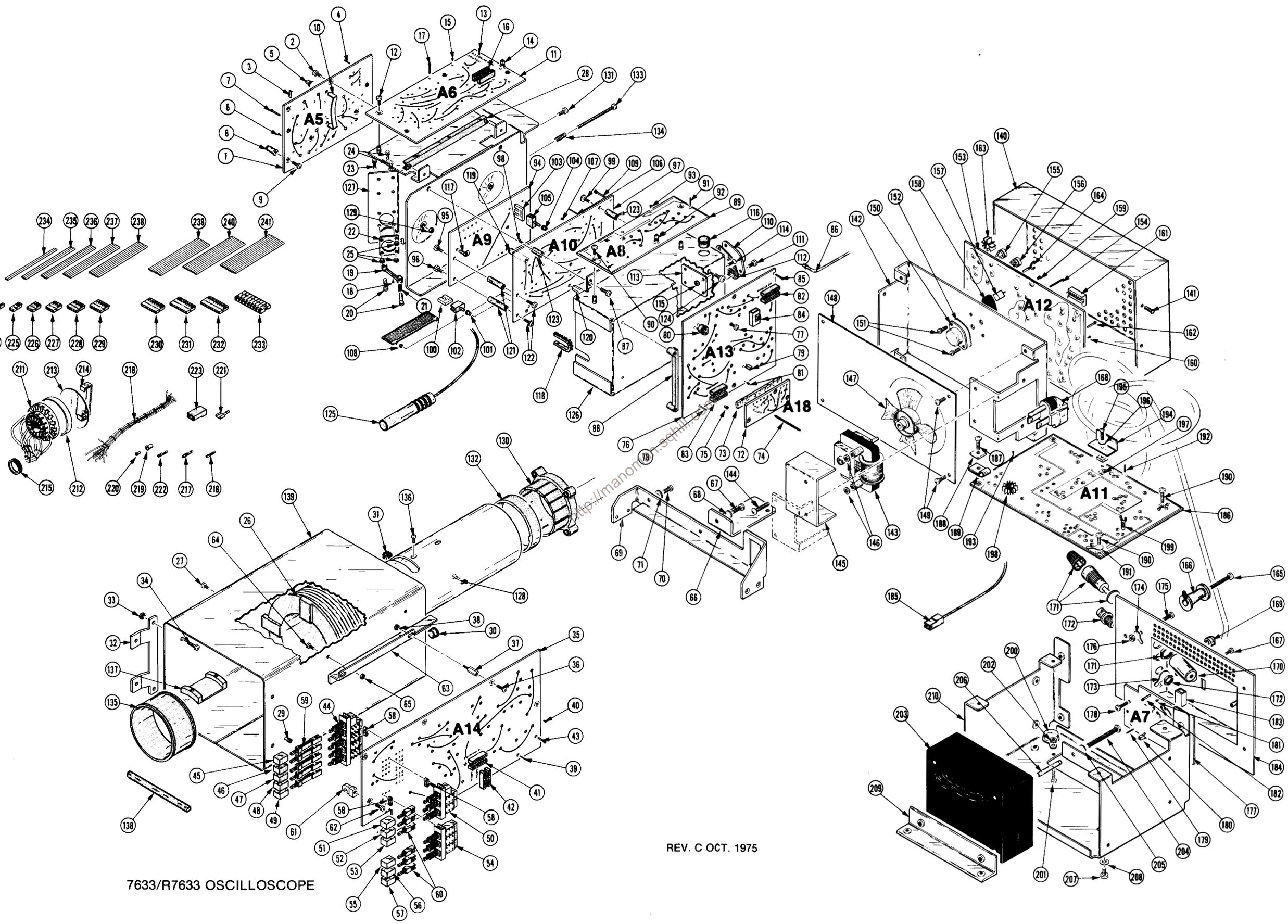

7633/R7633 OSCILLOSCOPE

REV. C OCT. 1975

http://manomon.sqhill.com

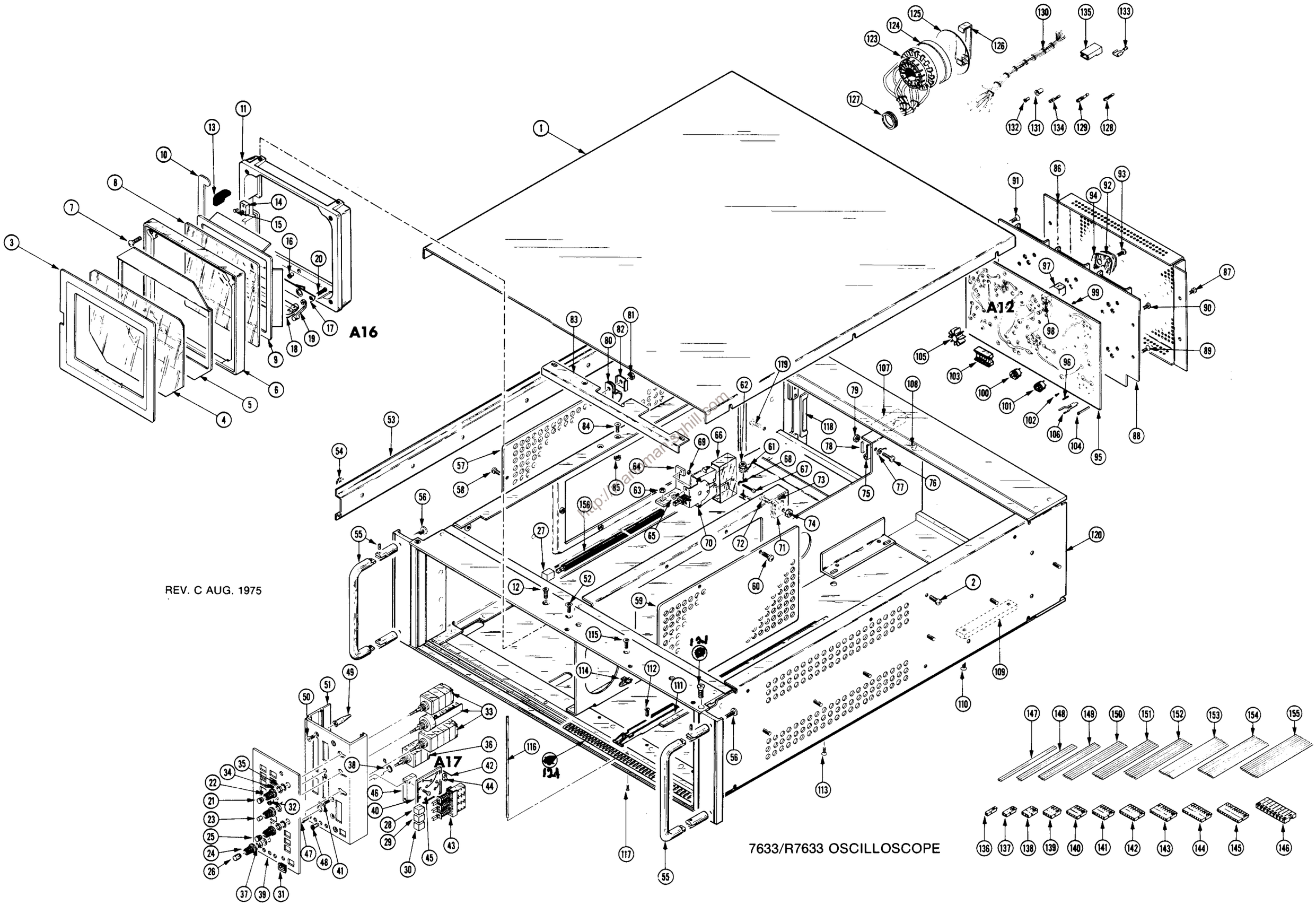
A16
A12
A17
REV. C AUG. 1975
7633/R7633 OSCILLOSCOPE

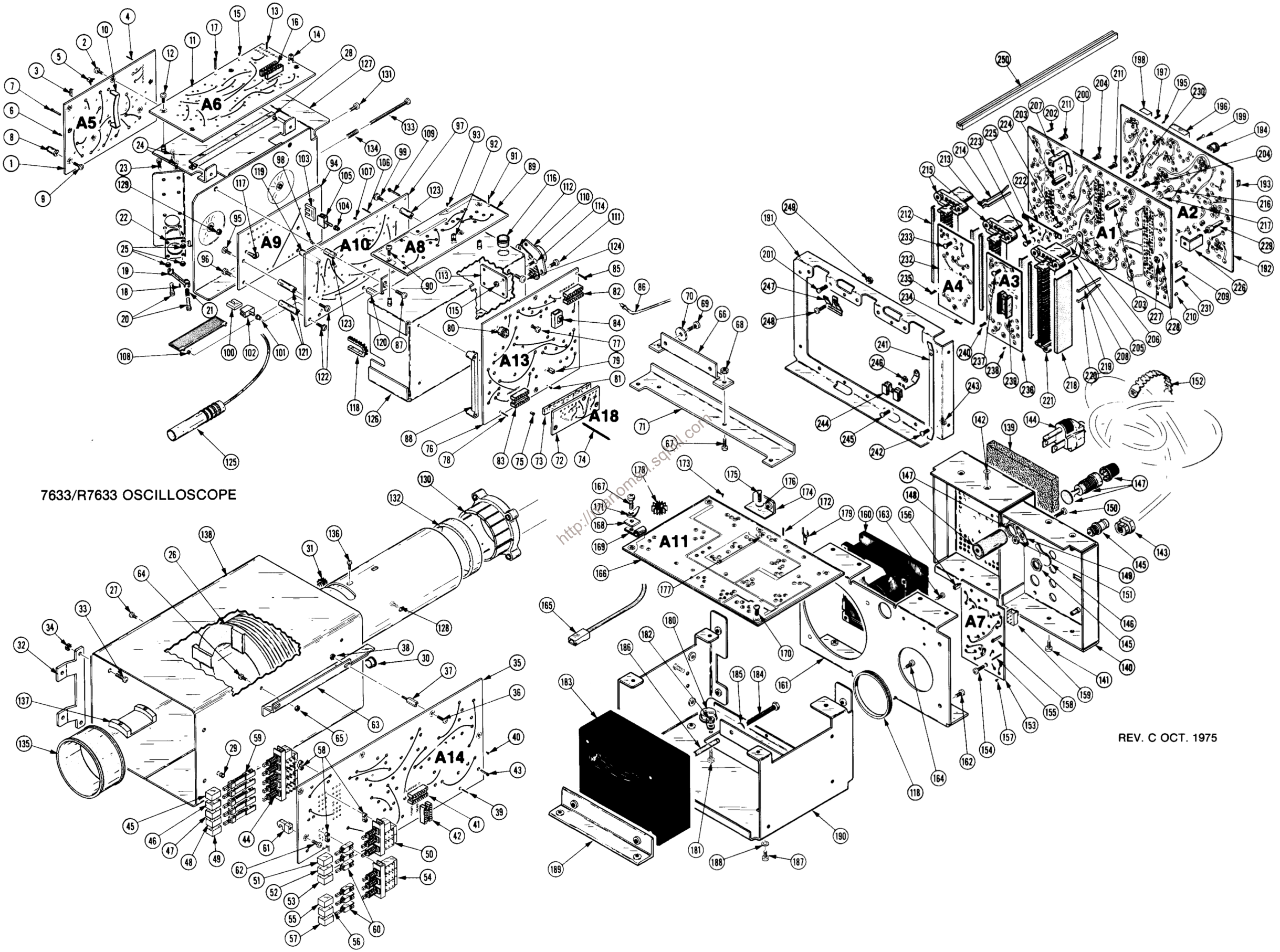

7633/R7633 OSCILLOSCOPE

REV. C OCT. 1975

http://manoman.squill.com

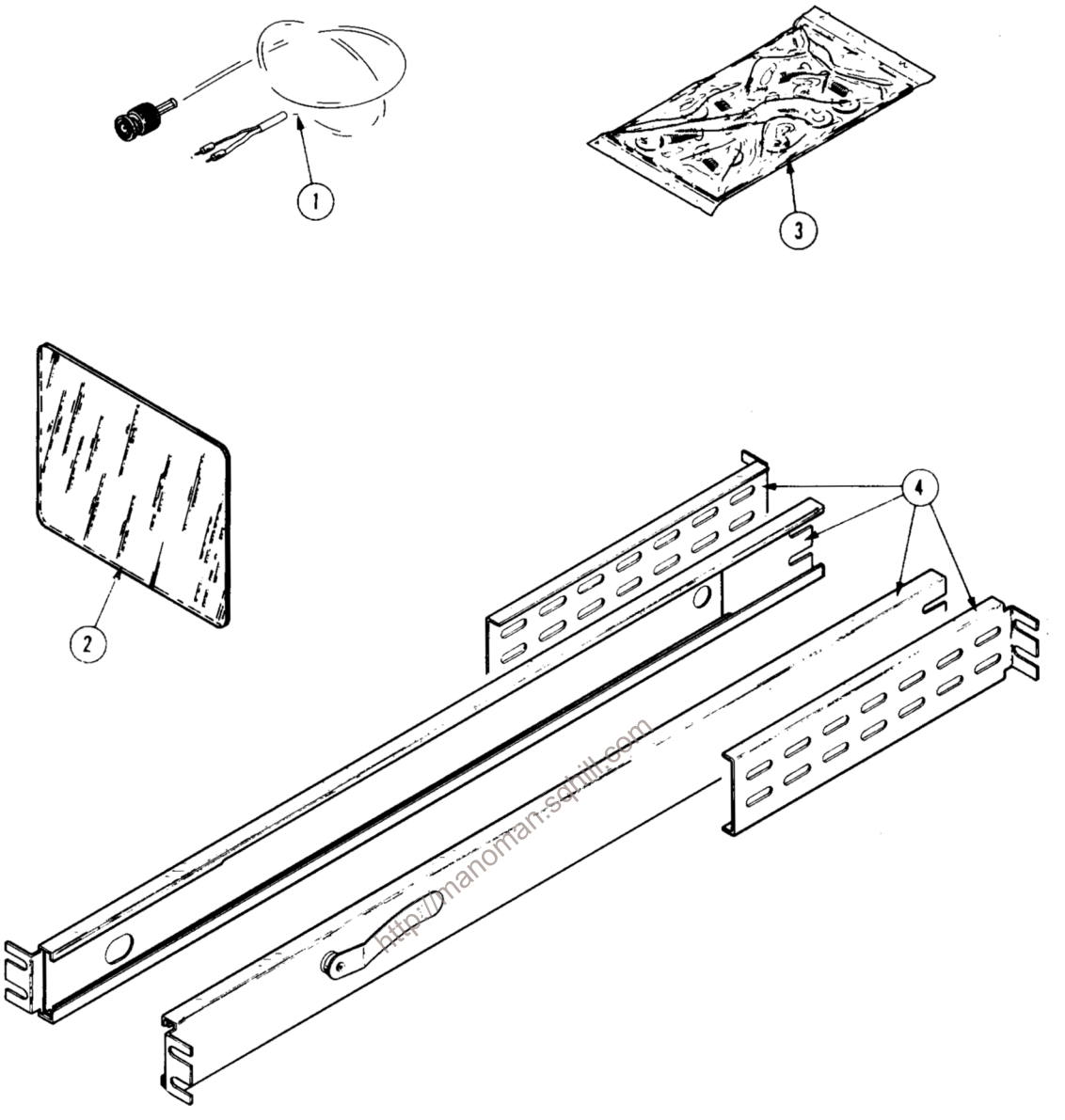

http://manoman.spiritl.com

Fig. & Index No.	Tektronix Part No.	Serial/Model No. Eff	Dscont	Qty 1 2 3 4 5	Name & Description	Mfr Code	Mfr Part Number
5-1	175-1178-00			1	CABLE,SPL PURP:RF	80009	175-1178-00
-2	378-0625-08			1	FILTER,LT,CRT:	80009	378-0625-08
-3	016-0131-00			1	HARDWARE KIT:(R7633 ONLY)	80009	016-0131-00
-4	351-0314-00			1	SLIDE-GUIDE:19.25 INCHES LONG(R7633 ONLY)	80009	351-0314-00
	070-1766-00			1	MANUAL,TECH:OPERATORS	80009	070-1766-00
	070-1767-00			1	MANUAL,TECH:SERVICE	80009	070-1767-00

REPLACEABLE PARTS FOR FACTORY INSTALLED OPTIONS

OPTION 7 Without Signals Out

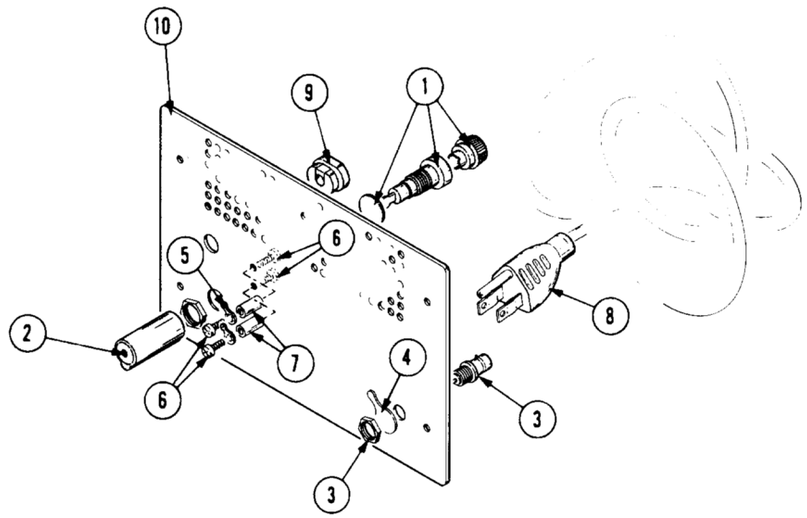

Fig. & Index No.	Tektronix Part No.	Serial/Model No. Eff	Disc	Qty	1 2 3 4 5	Description
7-1	352-0076-00			1		FUSEHOLDER ASSEMBLY, w/hardware
-2	200-1388-00			1		COVER, fuseholder
-3	131-0955-00			1		CONNECTOR, receptacle, BNC, w/hardware
-4	210-0255-00			1		TERMINAL, lug, 0.391 inch diameter, SE
-5	210-0201-00			2		TERMINAL, lug, 0.12 inch diameter, SE
-6	211-0008-00			4		SCREW, 4-40 X 0.25 inch, PHS
-7	385-0149-00			2		POST, 0.25 OD X 0.625 inch long
-8	161-0033-09			1		CABLE ASSEMBLY, power
-9	358-0323-00			1		BUSHING, strain relief
-10	386-2329-00			1		PANEL, rear

http://manoman.sqhill.com

OPTION 3 Electromagnetic Interference (EMI)

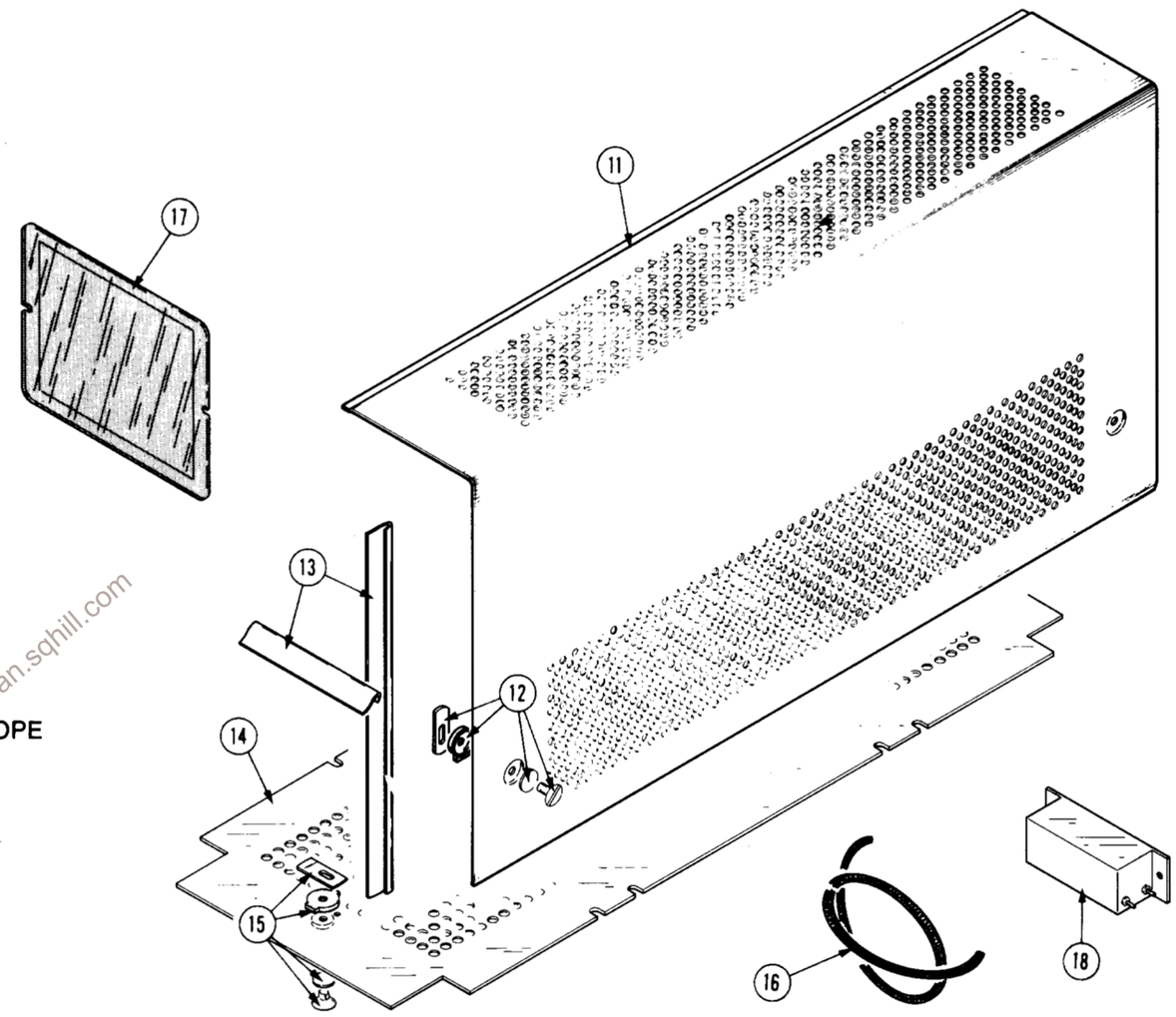

Fig. & Index No.	Tektronix Part No.	Serial/Model No. Eff	Disc	Qty	1 2 3 4 5	Description
7-11	390-0297-00			2		CABINET SIDE
	----------			-		each cabinet side includes:
-12	214-0816-00			6		LATCH ASSEMBLY
-13	348-0274-00			4		SHIELDING GASKET, electronic, 48 inches long
-14	390-0355-00			1		CABINET BOTTOM
	----------			-		cabinet bottom includes:
-15	214-0816-00			2		LATCH ASSEMBLY
-16	348-0234-00			1		SHIELDING GASKET, electronic, 39.50 inches long
-17	378-0603-00			1		FILTER, mesh, CRT
-18	119-0113-05			1		FILTER, radio interference

OPTIONAL ACCESSORY

	016-0155-00			1		PLUG-IN PANEL, blank (not shown)