TEK INSTRUCTION MANUAL

Part No. 070-5039-00
Product Group No. 42

# R7103
# OSCILLOSCOPE

**WARNING**

*The following service instructions are for use by qualified personnel only. To avoid personal injury, do not perform any service other than that contained in operating instructions unless you are qualified to do so. Refer to Operators Safety Summary and Service Summary prior to performing any service.*

*Please Check for CHANGE INFORMATION at the Rear of This Manual*

First Printing AUG 1984
Revised JUN 1985

Tektronix®
COMMITTED TO EXCELLENCE

http://manoman.sqhill.com

Copyright © 1984 Tektronix, Inc. All rights reserved. Contents of this publication may not be reproduced in any form without the written permission of Tektronix, Inc.

Products of Tektronix, Inc. and its subsidiaries are covered by U.S. and foreign patents and/or pending patents.

TEKTRONIX, TEK, SCOPE-MOBILE, and  are registered trademarks of Tektronix, Inc. TELEQUIPMENT is a registered trademark of Tektronix U.K. Limited.

Printed in U.S.A. Specification and price change privileges are reserved.

## INSTRUMENT SERIAL NUMBERS

Each instrument has a serial number on a panel insert, tag, or stamped on the chassis. The first number or letter designates the country of manufacture. The last five digits of the serial number are assigned sequentially and are unique to each instrument. Those manufactured in the United States have six unique digits. The country of manufacture is identified as follows:

| | |
|---|---|
| B000000 | Tektronix, Inc., Beaverton, Oregon, USA |
| 100000 | Tektronix Guernsey, Ltd., Channel Islands |
| 200000 | Tektronix United Kingdom, Ltd., London |
| 300000 | Sony/Tektronix, Japan |
| 700000 | Tektronix Holland, NV, Heerenveen, The Netherlands |

http://manoman.sqhill.com

# TABLE OF CONTENTS


PAGE

LIST OF ILLUSTRATIONS ..... v
LIST OF TABLES ..... vii
OPERATORS SAFETY SUMMARY ..... viii
SERVICING SAFETY SUMMARY ..... S1

**SECTION 1—GENERAL INFORMATION**

INTRODUCTION ..... 1-1
OPERATORS MANUAL ..... 1-1
INSTRUCTION MANUAL ..... 1-1
INSTALLATION ..... 1-1
INITIAL INSPECTION ..... 1-1
OPERATING-POWER INFORMATION ..... 1-1
POWER-CORD INFORMATION ..... 1-2
OPERATING VOLTAGE ..... 1-2
OPERATING TEMPERATURE ..... 1-2
PACKAGING FOR SHIPMENT ..... 1-2
SPECIFICATION ..... 1-4
SYSTEM ELECTRICAL SPECIFICATION ..... 1-12
STANDARD ACCESSORIES ..... 1-15
RECOMMENDED ACCESSORIES ..... 1-15

**SECTION 2—OPERATING INSTRUCTIONS**

PRELIMINARY OPERATION ..... 2-1
REDUCTION OF DISPLAY GAIN WITH DISPLAY OUTPUT CHARGE ..... 2-1
PLUG-IN UNITS ..... 2-1
INSTALLING PLUG-IN UNITS ..... 2-1
CONTROLS AND CONNECTORS ..... 2-2
FRONT-PANEL COLOR CODING ..... 2-2
OPERATORS CHECKOUT PROCEDURE ..... 2-2
TEST EQUIPMENT REQUIRED ..... 2-2
PRELIMINARY SETUP ..... 2-2
DISPLAY FOCUS ..... 2-3
TRACE ALIGNMENT ..... 2-3
GRATICULE ILLUMINATION ..... 2-3
CONTROL ILLUMINATION ..... 2-3
VERTICAL DEFLECTION SYSTEM ..... 2-3
HORIZONTAL DEFLECTION SYSTEM ..... 2-3
TRIGGERING ..... 2-3
READOUT ..... 2-7
BEAMFINDER ..... 2-7
CALIBRATOR ..... 2-7
Z-AXIS INPUT ..... 2-7
INTENSITY LIMITING ..... 2-7
DETAILED OPERATING INFORMATION ..... 2-8
GRATICULE ..... 2-8
GRATICULE ILLUMINATION ..... 2-8
LIGHT FILTERS ..... 2-8
EMI FILTER ..... 2-8
CONTROL ILLUMINATION ..... 2-8
INTENSITY CONTROL ..... 2-8
DISPLAY FOCUS ..... 2-9
ASTIGMATISM-FOCUS ADJUSTMENTS ..... 2-9
BEAMFINDER ..... 2-9
TRACE ALIGNMENT ..... 2-9
READOUT DISPLAY ..... 2-9

PAGE

OPERATING INSTRUCTIONS (CONT)
READOUT IDENTIFY ..... 2-9
READOUT INTENSITY ..... 2-10
READOUT MODES ..... 2-10
CARE OF CRT SCREEN ..... 2-10
VERTICAL MODE POSSIBILITIES ..... 2-10
VERTICAL MODES ..... 2-10
ALTERNATE MODE ..... 2-10
CHOPPED MODE ..... 2-11
ALGEBRAIC ADDITION ..... 2-11
TRIGGER SOURCE ..... 2-12
CALIBRATOR OUTPUT ..... 2-12
VOLTAGE ..... 2-12
CURRENT ..... 2-12
REPETITION RATE ..... 2-12
WAVE SHAPE ..... 2-12
SIGNAL OUTPUTS ..... 2-12
+SAWTOOTH OUT ..... 2-12
+GATE OUT ..... 2-12
SIGNAL OUT ..... 2-12
PROBE POWER ..... 2-12
DISPLAY PHOTOGRAPHY ..... 2-13
INTENSITY MODULATION ..... 2-13
REMOTE INPUT SIGNALS ..... 2-13
REMOTE SINGLE-SWEEP RESET AND LIMITED VIEWING TIME RESET ..... 2-13
REMOTE GRATICULE AND READOUT SINGLE SHOT ..... 2-13
APPLICATIONS ..... 2-14
VERTICAL AMPLIFIER PLUG-IN UNITS ..... 2-14
SINGLE-TRACE ..... 2-14
DUAL-TRACE ..... 2-14
THREE-TRACE ..... 2-14
FOUR-TRACE ..... 2-14
TIME-BASES ..... 2-14
SAMPLING DISPLAYS ..... 2-14
SINGLE-TRACE SAMPLING ..... 2-14
DUAL-TRACE SAMPLING ..... 2-14
X-Y SAMPLING ..... 2-15
SPECIAL PURPOSE PLUG-IN UNITS ..... 2-15
DIGITAL COUNTERS AND MULTIMETER PLUG-IN UNITS ..... 2-15
TRANSISTOR CURVE-TRACER PLUG-IN UNITS ..... 2-15
SPECTRUM ANALYZER PLUG-IN UNITS ..... 2-15
X-Y OPERATION ..... 2-15
RASTER DISPLAYS ..... 2-15


**WARNING**

*The remaining portion of this Table of Contents lists the servicing instructions. These instructions are for use by qualified personnel only. To avoid electrical shock, do not perform any servicing other than that called out in the operating instructions unless qualified to do so.*



http://manoman.sqhill.com

# TABLE OF CONTENTS (CONT)


PAGE

**SECTION 3—THEORY OF OPERATION**

BLOCK DIAGRAM ..... 3-1
DESCRIPTION ..... 3-1
DETAILED CIRCUIT OPERATION ..... 3-4
CABLE DISTRIBUTION ..... 3-4
MODE SWITCH AND CALIBRATOR ..... 3-4
CALIBRATOR ..... 3-4
MODE SWITCHING ..... 3-5
MAIN INTERFACE ..... 3-5
LOGIC ..... 3-5
CLOCK GENERATOR ..... 3-7
CHOPPED BLANKING ..... 3-8
CHOP COUNTER ..... 3-10
VERTICAL MODE CONTROL ..... 3-11
RIGHT ..... 3-11
CHOP ..... 3-12
ALTERNATE ..... 3-12
ADD AND LEFT ..... 3-12
VERTICAL BINARY ..... 3-12
PLUG-IN BINARY ..... 3-13
CHANNEL SWITCH BUFFER ..... 3-13
PLUG-IN ALTERNATE BUFFER ..... 3-13
PLUG-IN CHOP BUFFER ..... 3-14
Z-AXIS LOGIC ..... 3-14
MCP (MICROCHANNEL PLATE) INTENSITY TRACKING ..... 3-14
TRIGGER SELECTOR ..... 3-14
TRIGGER CHANNEL SWITCH ..... 3-14
TRIGGER AMPLIFIER ..... 3-15
VERTICAL SIGNAL OUTPUT AMPLIFIER ..... 3-15
READOUT SYSTEM ..... 3-15
TIMER ..... 3-19
TIME-SLOT COUNTER ..... 3-21
WORD TRIGGER ..... 3-21
CHANNEL COUNTER ..... 3-22
SINGLE-SHOT LOCKOUT ..... 3-22
ENCODING THE DATA ..... 3-23
COLUMN AND ROW DATA SWITCHES ..... 3-25
DISPLAY-SKIP GENERATOR ..... 3-25
COLUMN AND ROW DECODERS ..... 3-26
ZEROS LOGIC AND MEMORY ..... 3-26
CHARACTER GENERATOR ..... 3-28
DECIMAL POINT LOGIC AND CHARACTER POSITION COUNTER ..... 3-28
FORMAT GENERATOR ..... 3-28
Y-OUTPUT ..... 3-29
X-OUTPUT ..... 3-29
SIGNALS OUT ..... 3-29
+SAWTOOTH AMPLIFIER ..... 3-29
+GATE AMPLIFIER ..... 3-29
GRATICULE ILLUMINATION ..... 3-31
VERTICAL CHANNEL SWITCH ..... 3-31
CHANNEL SWITCH ..... 3-31
VERTICAL CHANNEL SELECTOR ..... 3-31
RIGHT AND LEFT CHANNEL FEEDBESIDE ..... 3-32

PAGE

THEORY OF OPERATION (CONT)
VERTICAL AMPLIFIER ..... 3-32
DELAY-LINE COMPENSATION ..... 3-32
OUTPUT AMPLIFIER ..... 3-32
FEEDBESIDE ..... 3-33
AUXILIARY AMPLIFIER ..... 3-33
POWER SUPPLY SHUTDOWN ..... 3-33
HORIZONTAL CHANNEL SWITCH ..... 3-34
CHANNEL SWITCH ..... 3-34
A CHANNEL FEEDBESIDE ..... 3-34
HORIZONTAL AMPLIFIER ..... 3-34
READOUT POSITIONING ..... 3-34
OUTPUT AMPLIFIER ..... 3-34
FAST PATH ..... 3-34
SLOW PATH ..... 3-35
INPUT CLAMP ..... 3-35
INTENSITY LIMITER AND Z AXIS AMPLIFIER ..... 3-35
INTENSITY LIMITER ..... 3-36
Z-AXIS AMPLIFIER ..... 3-37
AUTO FOCUS ..... 3-37
CRT CIRCUIT ..... 3-40
CONTROL GRID DC RESTORER ..... 3-40
CATHODE SUPPLY REGULATOR ..... 3-40
FOCUS GRID DC RESTORER ..... 3-40
GRID BIAS SUPPLY ..... 3-40
MICROCHANNEL PLATE SUPPLY ..... 3-41
ANODE VOLTAGE MULTIPLIER ..... 3-41
GRID BIAS ..... 3-41
-2400 VOLT SUPPLY ..... 3-42
HIGH-VOLTAGE TRANSFORMER ..... 3-42
GRID CROWBAR ..... 3-43
CRT ..... 3-43
CONVERTER/RECTIFIERS ..... 3-44
LINE INPUT ..... 3-45
INVERTER START NETWORK ..... 3-45
INVERTER ..... 3-45
OVER-VOLTAGE STOP ..... 3-47
INVERTER CONTROL ..... 3-47
PRE-REGULATOR ..... 3-47
FAULT PROTECTION ..... 3-47
INVERTER CURRENT LIMITER ..... 3-47
FAULT SENSE ..... 3-48
LINE STOP ..... 3-48
LOW-VOLTAGE RECTIFIERS ..... 3-48
LOW-VOLTAGE REGULATORS ..... 3-48
+50 V REGULATOR ..... 3-48
-15 V REGULATOR ..... 3-49
+5 V REGULATOR ..... 3-49
+15 V REGULATOR ..... 3-49
-50 V REGULATOR ..... 3-49
GRATICULE LIGHT SUPPLY ..... 3-49

**SECTION 4—MAINTENANCE**

PREVENTIVE MAINTENANCE ..... 4-1




http://manoman.sqhill.com

# TABLE OF CONTENTS (CONT)


PAGE

MAINTENANCE (CONT)
- CABINET PANEL REMOVAL ..... 4-1
- CLEANING ..... 4-1
  - EXTERIOR ..... 4-1
  - CRT ..... 4-1
- INTERIOR ..... 4-2
- SEMICONDUCTOR CHECKS ..... 4-2
- PERIODIC ELECTRICAL ADJUSTMENT ..... 4-2

TROUBLESHOOTING ..... 4-3
- TROUBLESHOOTING AIDS ..... 4-3
  - DIAGRAMS ..... 4-3
  - CIRCUIT BOARD ILLUSTRATIONS ..... 4-3
  - TROUBLESHOOTING CHART ..... 4-3
  - ADJUSTMENT AND TEST POINT LOCATIONS ..... 4-3
  - COMPONENT COLOR CODING ..... 4-3
  - SEMICONDUCTOR LEAD CONFIGURATIONS ..... 4-3
  - MULTI-PIN CONNECTORS ..... 4-3
- TROUBLESHOOTING EQUIPMENT ..... 4-6
- TROUBLESHOOTING TECHNIQUES ..... 4-6
  - 1. CHECK CONTROL SETTINGS ..... 4-7
  - 2. CHECK ASSOCIATED EQUIPMENT ..... 4-7
  - 3. VISUAL CHECK ..... 4-7
  - 4. CHECK INSTRUMENT ADJUSTMENT ..... 4-7
  - 5. ISOLATE TROUBLE TO A CIRCUIT ..... 4-7
  - 6. CHECK VOLTAGES AND WAVEFORMS ..... 4-7
  - 7. CHECK INDIVIDUAL COMPONENTS ..... 4-7
    - FUSES ..... 4-7
    - TRANSISTORS ..... 4-7
    - INTEGRATED CIRCUITS ..... 4-8
    - DIODES ..... 4-8
    - RESISTORS ..... 4-8
    - CAPACITORS ..... 4-8
  - 8. REPAIR AND ADJUST THE CIRCUIT ..... 4-8
- TROUBLESHOOTING THE HIGH-EFFICIENCY POWER SUPPLY ..... 4-8
  - PRELIMINARY PROCEDURE ..... 4-8
  - TROUBLESHOOTING PROCEDURE ..... 4-9
    - STEP A: CHECK LINE FUSE ..... 4-9
    - STEP B: ISOLATE MALFUNCTION FROM THE MAINFRAME CIRCUITRY ..... 4-9
    - STEP C: CHECK THE PRE-REGULATED POWER SUPPLIES ..... 4-10
    - STEP D: CHECK LINE INPUT CIRCUIT ..... 4-11
    - STEP E: CHECK CRT AND HIGH-VOLTAGE CIRCUIT ..... 4-11
    - STEP F: CHECK THE INVERTER CONTROL CIRCUIT ..... 4-11
    - STEP G: CHECK INVERTER CIRCUIT ..... 4-12
    - STEP H: CHECK LV RECTIFIER CIRCUIT ..... 4-13
- TROUBLESHOOTING THE CRT AND ASSOCIATED CIRCUITRY ..... 4-13
  - CRT DISPLAY SYMPTOM CHECKOUT PROCEDURE ..... 4-13
  - CRT CIRCUIT TROUBLESHOOTING PROCEDURE ..... 4-15
    - STEP A: CHECK ANODE VOLTAGE MULTIPLIER ..... 4-15
    - STEP B: CHECK CRT HEATER SUPPLY ..... 4-15
    - STEP C: CHECK MICROCHANNEL PLATE (MCP) SUPPLY ..... 4-16
    - STEP D: CHECK -2400 VOLT SUPPLY ..... 4-16
    - STEP E: CHECK GRID BIAS SUPPLY ..... 4-16
    - STEP F: CHECK GRID CROWBAR CIRCUIT ..... 4-17
    - STEP G: CHECK CONTROL GRID DC RESTORER ..... 4-17
    - STEP H: CHECK FOCUS GRID DC RESTORER 4-18
    - STEP I: CHECK Z-AXIS AMPLIFIER ..... 4-19
    - STEP J: CHECK INTENSITY LIMITER ..... 4-19
    - STEP K: CHECK AUTO FOCUS AMPLIFIER ..... 4-21
    - STEP L: CHECK GRID BIAS COMPENSATION. 4-21
    - STEP M: CHECK CRT EXIT ELECTRODE ..... 4-21
    - STEP N: CHECK CRT ISOLATION SHIELD ..... 4-21
    - STEP O: CHECK CRT SCAN EXPANSION LENS ..... 4-21
    - STEP P: CHECK CRT FIRST ANODE, SECOND SECTION ..... 4-22
    - STEP Q: CHECK CRT FOCUS ELECTRODE ..... 4-22
    - STEP R: CHECK CRT GRID ..... 4-22
    - STEP S: CHECK CRT CATHODE ..... 4-22
    - STEP T: CHECK CRT HEATER ..... 4-22
    - STEP U: CHECK FIRST ANODE ..... 4-22
    - STEP V: CHECK CRT STIGMATOR ..... 4-22
    - STEP W: CHECK CRT D1-D2 SHIELD ..... 4-22
    - STEP X: CHECK CRT ASTIGMATISM ..... 4-22
    - STEP Y: CHECK SPOT DEMAGNIFICATION LENS ..... 4-22

CORRECTIVE MAINTENANCE ..... 4-23
- OBTAINING REPLACEMENT PARTS ..... 4-23
- SOLDERING TECHNIQUES ..... 4-23
- REMOVING AND REPLACING PARTS ..... 4-24
  - HOW TO REMOVE THE POWER SUPPLY ..... 4-24
    - ACCESS TO COMPONENTS IN THE POWER SUPPLY ..... 4-24
  - HOW TO REMOVE THE CATHODE-RAY TUBE ..... 4-26
  - HOW TO REPLACE THE CATHODE-RAY TUBE ..... 4-26
  - CIRCUIT BOARDS ..... 4-27
    - CHASSIS-MOUNTED BOARDS ..... 4-27
    - PLUG-ON BOARDS ..... 4-27
    - A5 MODE SWITCH BOARD ..... 4-27
    - A6 INTERFACE BOARD ..... 4-28
    - A7/A8/A9/A10/A11/A12 FOLLOWER BOARDS ..... 4-28
    - A25 REGULATOR BOARD ..... 4-30
    - A24 CONTROL RECTIFIER BOARD ..... 4-30
    - A23 INVERTER BOARD ..... 4-31
  - PLUG-IN INTERFACE CONNECTORS ..... 4-32
  - DELAY LINE REMOVAL ..... 4-32
  - SEMICONDUCTORS ..... 4-32
    - HYPCON CONNECTORS ..... 4-33
  - INTERCONNECTING PINS ..... 4-36
    - COAXIAL-TYPE END-LEAD CONNECTORS ..... 4-36
    - CIRCUIT-BOARD PINS ..... 4-36
    - CIRCUIT-BOARD PIN SOCKETS ..... 4-37
    - MULTI-PIN CONNECTORS ..... 4-37




http://manoman.sqhill.com

# TABLE OF CONTENTS (CONT)


PAGE

MAINTENANCE (CONT)
- PUSHBUTTON SWITCHES ... 4-37
- GRATICULE LIGHT BULBS ... 4-37
- POWER TRANSFORMER ... 4-37
- ADJUSTMENT AFTER REPAIR ... 4-39

**SECTION 5—CHECKS AND ADJUSTMENT**
- USING THESE PROCEDURES ... 5-2
- PERFORMANCE CHECK SUMMARY ... 5-2
- ADJUSTMENT INTERVAL ... 5-12
- TEKTRONIX FIELD SERVICE ... 5-12
- TEST EQUIPMENT REQUIRED ... 5-12
- SPECIAL FIXTURES ... 5-12
- TEST EQUIPMENT ALTERNATIVES ... 5-12

PART I—PERFORMANCE CHECK ... 5-15
- INDEX TO PERFORMANCE CHECK PROCEDURE ... 5-15
- PERFORMANCE CHECK POWER-UP SEQUENCE ... 5-15
- A. Z-AXIS AND DISPLAY ... 5-16
- B. CALIBRATOR AND OUTPUT SIGNALS ... 5-18
- C. TRIGGER SYSTEM ... 5-22
- D. HORIZONTAL SYSTEM ... 5-24
- E. VERTICAL SYSTEM ... 5-26
- F. READOUT SYSTEM ... 5-30
- G. PHOTOGRAPHIC WRITING RATE ... 5-32

PART II—ADJUSTMENT AND PERFORMANCE CHECK ... 5-34
- INDEX TO ADJUSTMENT AND PERFORMANCE CHECK PROCEDURE ... 5-34
- ADJUSTMENT AND PERFORMANCE CHECK POWER-UP SEQUENCE ... 5-34
- A. POWER SUPPLY ... 5-35
- B. Z-AXIS AND DISPLAY ... 5-38
- C. CALIBRATOR AND OUTPUT SIGNALS ... 5-46
- D. TRIGGER SYSTEM ... 5-51
- E. HORIZONTAL SYSTEM ... 5-55
- F. VERTICAL SYSTEM ... 5-60
- G. READOUT SYSTEM ... 5-67
- H. PHOTOGRAPHIC WRITING RATE ... 5-70

PAGE

**SECTION 6—INSTRUMENT OPTIONS**
- LIST OF OPTIONS ... 6-1
- OPTION A1 ... 6-1
- OPTION A2 ... 6-1
- OPTION A3 ... 6-1
- OPTION A4 ... 6-1
- OPTION A5 ... 6-1
- HOW TO IDENTIFY THE OPTIONS ... 6-1
- OPTIONS A1 THROUGH A5 ... 6-1

**SECTION 7—REPLACEABLE ELECTRICAL PARTS**

**SECTION 8—DIAGRAMS AND CIRCUIT BOARD ILLUSTRATIONS**

DIAGRAMS
- CABLE DISTRIBUTION ... 1
- MODE SWITCH AND CALIBRATOR ... 2
- MAIN INTERFACE ... 3
- LOGIC ... 4
- TRIGGER SELECTOR ... 5
- READOUT SYSTEM ... 6
- SIGNALS OUT ... 7
- VERTICAL CHANNEL SWITCH ... 8
- VERTICAL AMPLIFIER ... 9
- HORIZONTAL CHANNEL SWITCH ... 10
- HORIZONTAL AMPLIFIER ... 11
- INTENSITY LIMITER AND Z-AXIS AMPLIFIER ... 12
- CRT CIRCUIT ... 13
- CONVERTER/RECTIFIERS ... 14
- LOW VOLTAGE REGULATORS ... 15

**SECTION 9—REPLACEABLE MECHANICAL PARTS**

**CHANGE INFORMATION**




http://manoman.sqhill.com

# LIST OF ILLUSTRATIONS


| FIGURE NO. | | PAGE |
|---|---|---|
| Frontis-piece | 7103 Features | x |
| 1-1 | Dimensions of R7103 | 1-11 |
| 2-1 | Front-panel controls, connectors, and indicators | 2-4 |
| 2-2 | Rear-panel controls, connectors, and indicators | 2-6 |
| 2-3 | Definition of graticule measurement lines | 2-8 |
| 2-4 | Location of readout on crt | 2-10 |
| 3-1 | Basic block diagram of the R7103 Oscilloscope | 3-2 |
| 3-2 | Block diagram of Logic circuit | 3-6 |
| 3-3 | a) Simplified Clock Generator and b) its waveforms | 3-7 |
| 3-4 | a) Input and output pins of U320, and b) its waveforms | 3-9 |
| 3-5 | a) Logic diagram for Vertical Chopped Blanking, and b) its I-O table | 3-10 |
| 3-6 | Logic diagram of Chop Counter | 3-11 |
| 3-7 | Idealized input and output waveforms for Chop Counter | 3-11 |
| 3-8 | Logic diagram of Vertical Mode Control circuit | 3-12 |
| 3-9 | Logic diagram for Vertical Binary circuit | 3-12 |
| 3-10 | Idealized relation between input and output waveforms of Vertical Binary and Plug-In Binary circuits when R7103 is set to Alternate mode | 3-13 |
| 3-11 | Plug-In Binary stage | 3-14 |
| 3-12 | Location of readout display on the crt identifying the originating plug-in and channel | 3-16 |
| 3-13 | Typical readout display where only channel 2 of the Right Vertical unit is displayed | 3-16 |
| 3-14 | Character selection matrix for R7103 Readout System | 3-17 |
| 3-15 | Output waveforms of the Timer stage | 3-19 |
| 3-16 | Detail of output at pins 12, 13, 14 and 16 of U3433 | 3-20 |
| 3-17 | Timer stage operation when display-skip condition occurs | 3-21 |
| 3-18 | Time relationship of the time-slot (TS) pulses produced by Q2159 | 3-22 |
| 3-19 | Typical encoding scheme for voltage-sensing plug-in unit. Coding shown for deflection factor of 100 microvolts | 3-23 |
| 3-20 | Idealized current waveform of a) Row analog data and b) Column analog data | 3-24 |
| 3-21 | Typical output waveforms for Zeros Logic and Memory stage operation (at pin 7 of U3401) | 3-27 |
| 3-22 | Readout word relating 10 possible character locations to the decimal point instructions that can be encoded; and the resultant crt display | 3-29 |
| 3-23 | Flow chart for character generation by the Readout System | 3-30 |
| 3-24 | Theoretical timing diagrams for the Intensity Limiting stage | 3-38 |
| 3-25 | Detailed block diagram of Converter/ Rectifier circuit | 3-44 |
| 3-26 | a) Representation of Inverter stage. Idealized waveforms of b) total Inverter current, $I_T$, c) Voltage across CR41 and d) Voltage across primaries of T110 and T35 | 3-46 |
| 4-1 | Color codes for resistors and capacitors | 4-4 |
| 4-2 | Semiconductor lead configurations | 4-5 |
| 4-3 | Orientation of multi-pin connectors | 4-6 |
| 4-4 | Current sensing waveform at A2R84 showing: a) Power supplies not in current limit operation. b) Power supplies in current limit operation | 4-11 |
| 4-5 | Current waveform at A23T30 showing burst operation at line voltage of about 60 V | 4-12 |
| 4-6 | Current waveform at A23T30 for normal Inverter operation at line voltage of 115 V | 4-12 |
| 4-7 | Waveform at TP34 on the Power-Supply Inverter board with the line voltage at about 20 V | 4-13 |
| 4-8 | Typical waveform at junction of R1811 and CR1747 on the A22 High Voltage Board | 4-17 |
| 4-9 | Typical waveform at junction of R1814 and CR1816 on the A22 High Voltage Board | 4-18 |
| 4-10 | Recommended desoldering sequence | 4-24 |
| 4-11 | Screws that retain the Power Supply | 4-25 |
| 4-12 | Location of terminals used to manually discharge C16 and C17 | 4-25 |
| 4-13 | Screws that fasten the Plug-On Boards to the A6 Interface Board | 4-28 |
| 4-14 | Screws that retain the A6 Interface Board | 4-29 |
| 4-15 | Correct placement of power transistors and their mounting hardware on rear heat sink | 4-31 |
| 4-16 | How to remove and replace the Hypcon assemblies | 4-34 |
| 4-17 | Coaxial end-lead connector assembly | 4-36 |
| 4-18 | Exploded view of circuit-board pin and ferrule | 4-37 |
| 4-19 | How to remove and replace pushbutton switches | 4-38 |
| 5-1 | Typical display of Photographic Writing Rate test | 5-33 |
| 5-2 | Readout display with Q3416 removed | 5-68 |
| 5-3 | Typical display of Photographic Writing Rate test | 5-71 |




http://manoman.sqhill.com

# LIST OF ILLUSTRATIONS (CONT)

**The illustrations in section 8 are located near their associated diagrams on the foldout page.**


8-1 Location of Circuit Boards in R7103.
8-2 Semiconductor lead configurations.
8-3 A1—Front Panel Board assembly.
8-4 A5—Mode Switch Board assembly.
8-5 A6—Interface Board assembly.
8-6 A13—Logic Board assembly.
8-7 A14—Trigger Selector Board assembly.
8-8 A15—Readout System Board assembly.
8-9 A16—Vertical Channel Switch Board assembly.
8-10 A17—Vertical Amplifier Board assembly.
8-11 A18—CRT Termination Board assembly.
8-12 A19—Horizontal Amplifier Board assembly.
8-13 A21—Z-Axis Board assembly.
8-14 A22—High-Voltage Board assembly.
8-15 A23—Inverter Board assembly.
8-16 A24—Control Rectifier Board assembly.
8-17 A25—Regulator Board assembly.
8-18 R7103 Troubleshooting Chart.
8-19 Test Point and Adjustment Locations A.
8-20 Test Point and Adjustment Locations B.
8-21 Adjustment Locations C.
8-22 Adjustment Locations D.
8-23 Test Point and Adjustment Locations E.
8-24 Test Point and Adjustment Locations F.
8-25 Test Point and Adjustment Locations G.
8-26 Adjustment Location H.




http://manoman.sqhill.com

# LIST OF TABLES


| TABLE NO. | | PAGE |
|---|---|---|
| 1-1 | Power-Cord Conductor Identification | 1-2 |
| 1-2 | Power-Cord and Plug Identification Information | 1-3 |
| 1-3 | Shipping Carton Test Strength | 1-3 |
| 1-4 | Electrical Characteristics | 1-4 |
| 1-5 | Environmental Characteristics | 1-10 |
| 1-6 | Physical Characteristics | 1-10 |
| 1-7 | Plug-In Incompatibility | 1-12 |
| 1-8 | R7103 Oscilloscope Vertical System Specification | 1-13 |
| 1-9 | R7103 Oscilloscope Horizontal System Specification | 1-15 |
| 2-1 | Displays | 2-11 |
| 3-1 | Mode Switching Inputs/Outputs | 3-5 |
| 3-2 | Standard Readout Format | 3-18 |
| 3-3 | Channel Address Code | 3-22 |
| 4-1 | Recommended Power Supply Troubleshooting Sequence | 4-9 |
| 4-2 | Typical Power-Supply Resistance | 4-10 |
| 4-3 | Burst Voltage Test Points | 4-10 |
| 4-4 | Recommended CRT Circuitry Troubleshooting Sequence | 4-14 |
| 5-1 | Calibration Procedure Electives | 5-1 |
| 5-2 | Performance Check Summary | 5-3 |
| 5-3 | Test Equipment | 5-13 |
| 5-4 | Power Supply Tolerance | 5-36 |
| 5-5 | Vertical Compensation Adjustments | 5-62 |
| 5-6 | Low-Frequency Compensation | 5-63 |
| 6-1 | Option Information Locator | 6-2 |




http://manoman.sqhill.com

# OPERATORS SAFETY SUMMARY

The following general safety information applies to all operators and service personnel. Specific warnings and cautions will be found throughout the manual where they apply and should be followed in each instance.

## TERMS

### IN THIS MANUAL

**CAUTION** statements identify conditions or practices that could result in damage to the equipment or other property.

**WARNING** statements identify conditions or practices that could result in personal injury or loss of life.

### AS MARKED ON EQUIPMENT

**CAUTION** indicates a personal injury hazard not immediately accessible as one reads the marking, or a hazard to property including the equipment itself.

**DANGER** indicates a personal injury hazard immediately accessible as one reads the marking.

## SYMBOLS

### IN THIS MANUAL


Static-Sensitive Devices


This symbol indicates where applicable cautionary or other information is to be found.

### AS MARKED ON EQUIPMENT


**DANGER**—High voltage.


Protective ground (earth) terminal.


**ATTENTION**—Refer to manual.

## WARNINGS

### POWER SOURCE

This product is intended to operate from a power source that will not apply more than 250 volts rms between the supply conductors or between either supply conductor and ground. A protective ground connection, by way of the grounding conductor in the power cord, is essential for safe operation.

### GROUNDING THE INSTRUMENT

The R7103 is grounded through the grounding conductor of the power cord. To avoid electrical shock, plug the power cord into a properly wired receptacle, where earth ground has been verified by a qualified service person, before making connections to the input or output terminals of the instrument. A protective-ground connection, by way of the grounding conductor in the power cord, is essential for safe operation.



http://manoman.sqhill.com

## DANGER ARISING FROM LOSS OF GROUND

Upon loss of the protective-ground connection, all accessible conductive parts (including knobs and controls that may appear to be insulating), can render an electric shock.

## USE THE PROPER FUSE

To avoid fire hazard, use only the fuse specified in the parts list for your product, and which is identical in type, voltage rating, and current rating.

## DO NOT OPERATE IN EXPLOSIVE ATMOSPHERE

To avoid explosion, do not operate this instrument in an atmosphere of explosive gases.

## DO NOT REMOVE PANELS OR COVERS

To avoid personal injury, do not remove the protective cabinet panels or covers. Do not operate this instrument without the panels or covers properly installed.

## DO NOT OPERATE WITHOUT COVERS

To avoid personal injury, do not operate this product without covers



http://manoman.sqhill.com

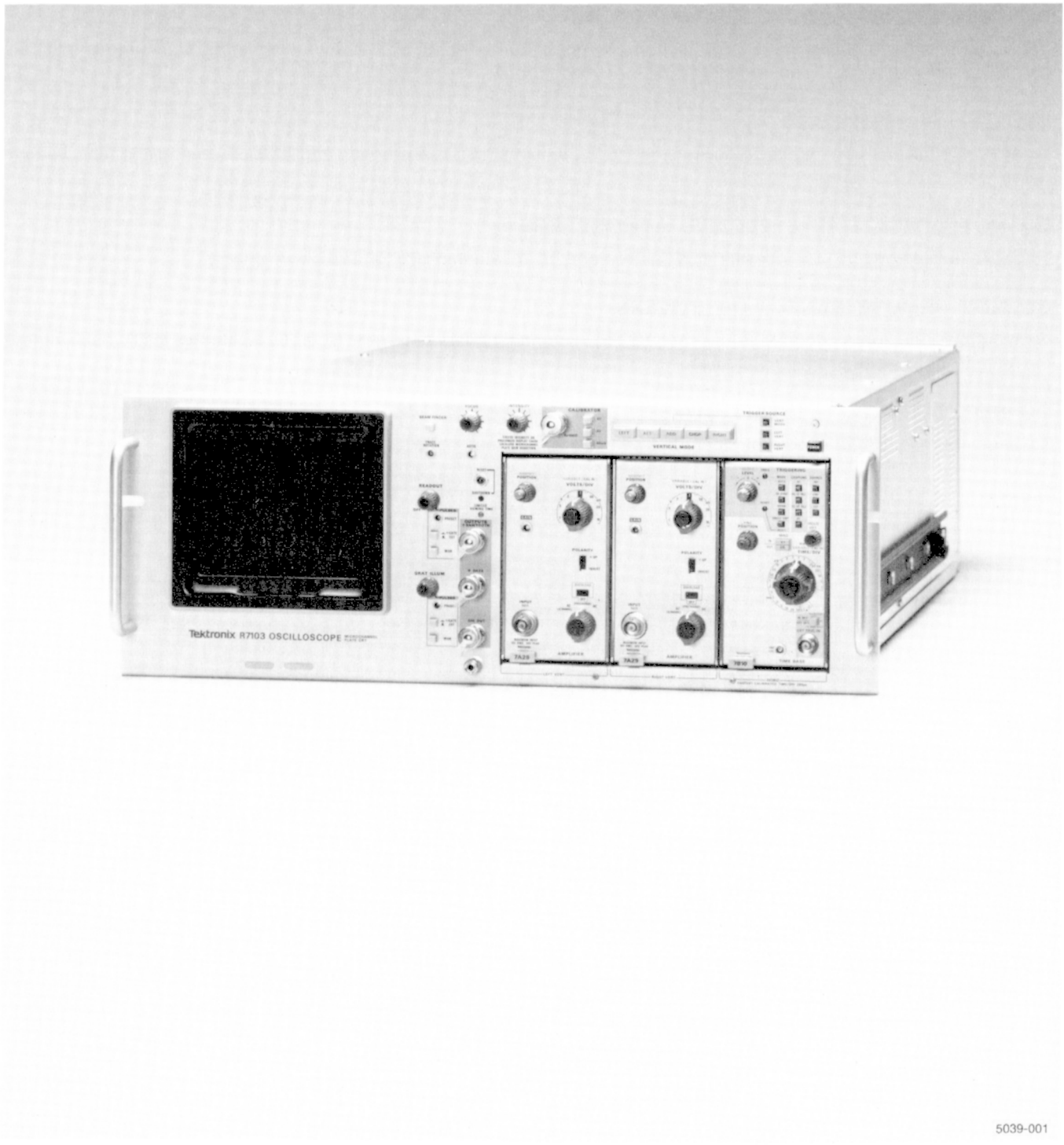


## R7103 FEATURES

The TEKTRONIX R7103 Oscilloscope is a solid-state, wide-bandwidth instrument designed for general-purpose applications. The R7103 can be used to display or make photographs of very fast repetitive or single-shot waveforms.

The R7103 accepts Tektronix 7000-series plug-in units; the flexibility of the plug-in feature and the variety of plug-in units available can configure the system to suit many measurement applications. The left pair of plug-in compartments are for vertical deflection and the right one is for horizontal deflection. Electronic switching between the two left compartments will produce a multi-trace vertical display.



http://manoman.sqhill.com

# GENERAL INFORMATION

## INTRODUCTION

### OPERATORS MANUAL

The Operators Manual has the following three sections:

Section I—General Information, contains a description of the R7103, its electrical specifications, environmental characteristics, standard and recommended accessories, installation, and packaging for shipment instructions.

Section 2—Operating Instructions, contains information about operating and checking the instrument operation.

Section 3—Instrument Options, contains a description of available options and gives the location of the incorporated information about those options.

### INSTRUCTION MANUAL

The first two sections of the Instruction Manual contain operating instructions which are identical to the first two sections of the Operators Manual.

**WARNING**

*THE REMAINING PORTIONS OF THE INSTRUCTION MANUAL CONTAIN SERVICING INSTRUCTIONS. THESE SERVICING INSTRUCTIONS ARE FOR USE BY QUALIFIED SERVICE PERSONNEL ONLY. TO AVOID ELECTRIC SHOCK OR OTHER PERSONAL INJURY, DO NOT PERFORM ANY SERVICING OTHER THAN THAT DESCRIBED IN THE OPERATING INSTRUCTIONS UNLESS YOU ARE QUALIFIED TO DO SO.*

Section 3—Theory of Operation, contains basic and general circuit analysis that may be useful for servicing or operating the instrument.

Section 4—Maintenance, describes routine and corrective maintenance procedures with detailed instructions for replacing assemblies, subassemblies, and individual components.

Section 5—Calibration, contains procedures to check the operational performance and electrical characteristics of the instrument. Procedures also include methods for adjustment of the instrument to meet specifications.

Section 6—Instrument Options, contains a description of available options and locations of incorporated information about those options.

Section 7—Replaceable Electrical Parts, contains information necessary to order replaceable electrical parts and assemblies.

Section 8—Diagrams and Circuit Board Illustrations, includes detailed circuit schematics, locations of assembled circuit boards, voltage and waveform information, circuit board component locators, and locations of adjustments to aid in the performing the Adjustment and Performance Check part of the Calibration procedure.

Section 9—Replaceable Mechanical Parts, includes information necessary to order replaceable mechanical parts and shows exploded drawings which identify assemblies.

## INSTALLATION

### INITIAL INSPECTION

The R7103 was inspected both mechanically and electrically before shipment. It should be free of mars or scratches and should meet or exceed all electrical specifications. To confirm this, inspect the instrument for physical damage incurred in transit and test its electrical performance by following the Operators Checkout Procedure in Section 2, Operating Instructions. Verify Performance Requirements by referring a qualified service person to the servicing sections of the Instruction Manual. If there is damage or deficiency, contact your local Tektronix Field Office or representative.

### OPERATING-POWER INFORMATION

This instrument can be operated from either a 115-volt or 230-volt nominal supply source, 48 to 440 hertz. The line fuse remains the same for both 115-volt and 230-volt operation.



http://manoman.sqhill.com

**CAUTION**

*To prevent damage to the instrument, always check the LINE VOLTAGE SELECTOR switch located on the rear of the instrument before connecting the instrument to the supply circuit.*

**WARNING**

*AC POWER SOURCE AND CONNECTION. The R7103 operates from a single-phase power source. It has a three-wire power cord and two-pole, three-terminal grounding-type plug. The voltage to ground (earth) from either pole of the power source must not exceed the maximum rated operating voltage, 250 volts.*

*Before making connection to the power source, check that the R7103 line voltage selector is set to match the voltage of the power source, and has a suitable two-pole, three-terminal grounding-type plug. Refer any changes to qualified service personnel.*

*GROUNDING. This instrument is safety class I equipment (IEC designation). All accessible conductive parts are directly connected through the grounding conductor of the power cord to the grounding contact of the power plug.*

*The power input plug must be inserted only in a mating receptacle with a grounding contact where earth ground has been verified by a qualified service person. Do not defeat the grounding connection. Any interruption of the grounding connection can create an electric shock hazard.*

*For electric shock protection, the grounding connection must be made before making connection to the instrument's input or output terminals.*

**TABLE 1-1**
**Power-Cord Conductor Identification**

| Conductor | Color | Alternate Color |
|---|---|---|
| Ungrounded (Line) | Brown | Black |
| Grounded (Neutral) | Light Blue | White |
| Grounded (Protective Ground) | Green-Yellow | Green |

## POWER-CORD INFORMATION

A power cord with the appropriate plug configuration is supplied with each R7103. For your convenience the color-coding of the conductors in the power cord is given in Table 1-1. Also, should you require a power-cord plug other than that supplied, refer to Table 1-2, Power-Cord and Plug Identification.

## OPERATING VOLTAGE

The LINE VOLTAGE SELECTOR (located on the rear-panel) allows you to select 115-volt or 230-volt nominal line voltage operation. To convert from 115-volt to 230-volt operation, change the power cord and plug to match the power-source receptacle, then use a small screwdriver to move the LINE VOLTAGE SELECTOR to the desired range. The line fuse remains the same for both 115-volt and 230-volt operation.

## OPERATING TEMPERATURE

The R7103 can be operated where the ambient air temperature is between 0° and +50° C and can be stored in ambient temperatures from −55° to +75° C. After storage at temperatures outside the operating limits, allow the chassis to reach a safe operating temperature before applying power.

The R7103 is cooled by air drawn in through the rear of the instrument by the fan and blown out through the sides.

# PACKAGING FOR SHIPMENT

If the R7103 is to be shipped for long distances by commercial transportation, it is recommended that the instrument be packaged in the original manner. The carton and packaging material in which your instrument was shipped should be saved and used for this purpose.

Also, if this instrument is to be shipped to a Tektronix Service Center for service or repair, attach a tag to the instrument showing the following: Owner of the instrument (with address), the name of a person at your firm who can be contacted, complete instrument type and serial number, and a description of the service required.

If the original packaging is unfit for use or not available, package the instrument as follows:

1. Obtain a corrugated cardboard shipping carton having inside dimensions at least six inches greater than the instrument dimensions; refer to Table 1-3 for carton test strength requirements.

2. Enclose the instrument with polyethylene sheeting or equivalent to protect the finish of the instrument.



http://manoman.sghill.com

**TABLE 1-2**
**Power-Cord and Plug Identification Information**

| Plug Configuration | Usage | Nominal Line-Voltage (AC) | Reference Standards | Option # |
|---|---|---|---|---|
|  | North American 120V/15A | 120 V | [1]ANSI C73.11<br>[2]NEMA 5-15-P<br>[3]IEC 83 | Standard |
| 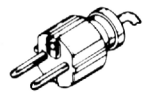 | Universal Euro 220V/6-16A | 220 V | [4]CEE (7),II,IV,VII<br>[3]IEC 83 | A1 |
| 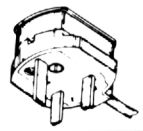 | UK 240V/6-13A | 240 V | [5]BS 1363<br>[3]IEC 83 | A2 |
| 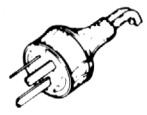 | Australian 240V/6-10A | 240 V | [6]AS C112 | A3 |
|  | North American 240V/15A | 240 V | [1]ANSI C73.20<br>[2]NEMA 6-15-P<br>[3]IEC 83 | A4 |
|  | Switzerland 220V/6-10A | 220 V | [7]SEV | A5 |

[1]**ANSI—American National Standards Institute**
[2]**NEMA—National Electrical Manufacturer's Association**
[3]**IEC—International Electrotechnical Commission**
[4]**CEE—International Commission on Rules for the Approval Electrical Equipment**
[5]**BS—British Standards Institution**
[6]**AS—Standards Association of Australia**
[7]**SEV—Schweizevischer Elektrotechischer Verein**

3. Cushion the instrument on all sides by tightly packing dunnage or urethane foam between the carton and the instrument, allowing three inches on each side.

4. Seal the carton with shipping tape or with an industrial stapler.

5. Mark the address of the Tektronix Service Center and your return address on the carton in one or more prominent locations.

**TABLE 1-3**
**Shipping Carton Test Strength**

| Gross Weight (lb) | Carton Test Strength (lb) |
|---|---|
| 0-10 | 200 |
| 10-30 | 275 |
| 30-120 | 375 |
| 120-140 | 500 |



http://manoman.sqhill.com

# SPECIFICATION

The electrical characteristics listed in Table 1-4 apply at an ambient temperature of 0° to +50° C, unless otherwise stated, when the following conditions are met: (1) the instrument must have been adjusted at an ambient temperature between +20° and +30° C, (2) the instrument must be allowed a 20-minute warm-up period, (3) the instrument must be in an environment that meets the limits described in Table 1-5.

Any applicable conditions not listed above are expressly stated as part of that characteristic. Table 1-5 lists Environmental characteristics and Table 1-6 gives the Physical characteristics.

**TABLE 1-4**
**Electrical Characteristics**

| Characteristic | Performance Requirement |
|---|---|
| **VERTICAL SYSTEM** | |
| Deflection Factor | Compatible with all 7000-series plug-in units. |
| Difference Between Vertical Compartments | 1% or less. |
| Low-Frequency Linearity | 0.1 div or less compression or expansion of a center-screen two-division display positioned anywhere vertically within the graticule area. |
| Frequency Response | Varies with plug-in unit selected. See R7103 Oscilloscope Vertical Systems Specification, Table 1-8. |
| Step Response | |
| Rise Time (10 to 90%), with 7A29 Amplifier (0° to +35°C) | 350 ps or less (calculated from bandwidth). |
| Isolation between Vertical Compartments (eight-division signal) | |
| LEFT, RIGHT, ALT modes | At least 160:1 from dc to 100 MHz and at least 80:1 from 100 MHz to 1 GHz. |
| Delay Line | Permits viewing leading edge of triggering signal.<br>**NOTE**<br>*7B50-series time bases will not display leading edge of the trigger signal in R7103 (except 7B50A).* |
| Difference in Signal Delay Between Vertical Compartments | 50 ps or less. |
| Vertical Display Modes | Selected by front-panel VERTICAL MODE selector. |
| LEFT | Signal from left vertical plug-in unit displayed. |
| ALT | Display alternates between left and right vertical plug-in units at a rate determined by the horizontal plug-in unit. |
| ADD | Display is algebraic sum of left and right vertical plug-in units. |
| CHOP | Display chops between left and right vertical plug-in units asynchronously to horizontal plug-in unit. |
| Repetition Rate | 1 MHz within 20%. |
| RIGHT | Signal from right vertical plug-in unit displayed. |



http://manoman.sqhill.com

**TABLE 1-4 (CONT)**
**Electrical Characteristics**

| Characteristic | Performance Requirement |
|---|---|
| **TRIGGERING** | |
| TRIGGER SOURCE | Selected by front-panel TRIGGER SOURCE buttons. Lights behind buttons illuminate to indicate trigger source. |
| VERT MODE | The trigger source is controlled by vertical display mode selection. Source(s) is(are) shown by the illumination of the LEFT VERT and RIGHT VERT button(s). Source follows (is same as) the vertical display with the following two exceptions: |

| VERT MODE | Trigger Source |
|---|---|
| CHOP | Left |
| ALT | Right Trigger, then Left Trigger |

| | |
|---|---|
| LEFT VERT | Trigger source: Left vertical unit. LEFT VERT trigger source button illuminated. |
| RIGHT VERT | Trigger source: Right vertical unit. RIGHT VERT trigger source button illuminated. |
| **HORIZONTAL SYSTEM** | |
| Deflection Factor | Compatible with all 7000-series plug-in units. |
| DC Linearity | 0.05 division or less error at each graticule line after adjusting for no error at second and tenth graticule lines. |
| Fastest Calibrated Sweep Rate | 200 ps/div. (See R7103 Horizontal System Specs., Table 1-9). |
| Phase Shift Between Vertical and Horizontal Deflection Systems | 2° or less from dc to at least 50 kHz. |
| Bandwidth | 350 MHz. |
| **CALIBRATOR** | |
| Waveshape | Square wave. |
| Polarity | Positive going, with baseline near 0 volt. |
| Output Resistance | 450 Ω. |
| Output voltage | (Selected by front-panel CALIBRATOR switch). |
| Into 100 kΩ or greater | 40 mV, 0.4 V, 4 V. |
| Into 50 Ω | 4 mV, 40 mV, 0.4 V. |
| Output Current | 40 mA available through CALIBRATOR output with optional bnc-to-Current Loop adapter. CALIBRATOR must be set to 4 V for calibrated output. |
| Amplitude Accuracy (P-P Voltage) | Within 1%. |
| Repetition Rate | 1 kHz within 0.25%. |



http://manoman.sqhill.com

**TABLE 1-4 (CONT)**
**Electrical Characteristics**

| Characteristic | Performance Requirement |
|---|---|
| **CALIBRATOR (CONT)** | |
| Duty Factor | 49.8% to 50.2%. |
| Rise Time and Fall Time | 500 ns or less into 100 pF or less. |
| **SIGNAL OUTPUTS** | |
| +SAWTOOTH OUT | |
| Source | HORIZ time-base. |
| Polarity | Positive-going with baseline at 0 V within 1 V into 1 MΩ. |
| Output Voltage | |
| Rate of Rise | |
| Into 50 Ω | 50 mV/unit of time selected by time base time/div switch, within 15%, 100 ns/div maximum sweep rate. |
| Into 1 MΩ | 1 V/unit of time selected by the time base time/div switch, within 10%; 1 μs/div maximum sweep rate. |
| Output Resistance | Approximately 950 Ω. |
| +GATE | |
| Source | Gate, derived from HORIZ time base main gate. |
| Polarity | Positive-going with baseline at 0 V within 1.0 V into 1 MΩ. |
| Output Voltage | |
| Into 50 Ω | 0.5 V within 10%. |
| Into 1 MΩ | 10 V within 10% (up to 1 μs/div sweep rate). |
| Rise Time Into 50 Ω | 5 ns or less. |
| Fall Time Into 50 Ω | 15 ns or less. |
| Output Resistance | Approximately 950 Ω. |
| SIG OUT | Selected by TRIGGER SOURCE selector. |
| Source | Same as TRIGGER SOURCE. |
| Output Voltage | |
| Into 50 Ω | 25 mV/div of vertical deflection within 25%. |
| Into 1 MΩ | For a maximum output of ±2 V: 0.5 V/div of vertical deflection within 25%. |
| Bandwidth into 50 Ω | Varies with vertical plug-in selected; see Table 1-8, R7103 Oscilloscope Vertical System Specification. |
| DC Centering | 0 V within 1 V into 1 MΩ. |
| Aberrations | 15% or less p-p within 50 ns of step. |
| Output Resistance | Approximately 950 Ω. |



http://manoman.sqhill.com

**TABLE 1-4 (CONT)**
**Electrical Characteristics**

| Characteristic | Performance Requirement |
|---|---|
| **READOUT DISPLAY** | |
| Readout Modes | |
| Free-Run (not labeled) | Continuously displayed. |
| PULSED | Single-shot operation. |
| Pulse Source | Selected by front-panel switches.<br>+GATE: Triggered by the trailing edge of the +GATE.<br>EXT: Controlled through rear-panel remote control connector.<br>MAN: Manual trigger, independent of other pulse sources. |
| **DISPLAY** | |
| Graticule | |
| Type | Internal, illuminated with variable edge lighting. |
| Lighting | |
| Normal | Continuously lighted. |
| PULSED | Signal-shot operation. Lights are pulsed on for approximately 0.5 seconds. |
| Pulse Source | Selected by front-panel switches.<br>+GATE: Triggered by trailing edge of +GATE.<br>EXT: Controlled through rear-panel remote control connector.<br>MAN: Manual trigger, independent of other pulse sources. |
| Area | 8 × 10 div (one division equals 8.5 mm). |
| Phosphor | P31. |
| Vertical and Horizontal Resolution | 17 lines/div. |
| High Voltage | |
| Screen Voltage | Approximately 12.5 kV. |
| Limited Viewing Time Indicator | |
| Steady Yellow | Crt display time is limited to approximately 1 hour or less, depending on intensity of display. |
| Flashing Yellow | Crt display time is limited to approximately 1 minute and intensity is being limited. |
| Shutdown Indicator | |
| Flashing Red | Crt display will be shut off within 10 seconds. |
| Steady Red | Indicates crt display is shut off. |
| Geometry | Within 0.1 div of vertical and horizontal graticule lines. |
| BEAMFINDER | When actuated, limits display to within graticule area and defocuses display. |



http://manoman.sqhill.com

**TABLE 1-4 (CONT)**
**Electrical Characteristics**

| Characteristic | Performance Requirement |
|---|---|
| **DISPLAY (CONT)** | |
| Photographic Writing Speed | 20 cm/nsec (without mesh or blue filter).<br>PHOSPHOR: Standard P31.<br>CAMERA: TEKTRONIX C53; f/1.9 1:0.85 lens.<br>FILM: Polaroid Type 107; 3000 ASA. |
| **REMOTE CONNECTORS AND SWITCHES** | |
| Control Illumination | HIGH, MEDIUM and OFF. Three-position switch located on rear panel of power supply. |
| Camera Power | Three-contact connector compatible with TEKTRONIX C-50 Series Cameras. |
| Bottom Pin | Ground |
| Center Pin | Single sweep reset. |
| Top Pin | +15 V. |
| SINGLE SWEEP RESET | Connector (bnc) on rear panel to reset single-sweep function of time base installed in HORIZ compartment. Also resets the Limited View Time function. |
| Signal Required | Closure to ground or switching from the high level (+50 to +10 V; sink less than 40 $\mu$A) to low level (+0.5 V to −5 V; sink less than 12 mA) in less than 1 msec, resets the sweep and the Limited View Time function. Compatible with 15 V open-collector TTL source. |
| Minimum Pulse Width | 10 $\mu$s at 50% amplitude points. |
| Maximum Safe Input Voltage | +50 V to −5 V (dc + peak ac). |
| SINGLE SWEEP READY | Connector (bnc) on rear panel. Remote ready indicator for HORIZ time base. |
| Output Signal | Open when not ready. +5 V at 47 Ω source impedance when ready. Output will light a No. 49 bulb. |
| GRATICULE/READOUT SINGLE SHOT | Connector (bnc) on rear panel. Switching to the low level (+1 V to −5 V; sink less than 2 mA) from the high level (+10 V to +15 V; sink less than 0.3 mA), in less than 1 $\mu$sec, triggers the readout to display one complete readout frame and the GRAT ILLUM to be illuminated for approximately 0.5 sec.<br><br>Compatible to 15 V open collector TTL source. |
| Maximum Open Circuit Voltage | +15 V. |
| Maximum Safe Input Voltage | +15 V to −5 V (dc plus peak ac). |
| Probe Power | Two probe power connectors on rear panel. |
| Pin 1 | +5 V. |
| Pin 2 | Chassis ground. |



http://manoman.sqhill.com

**TABLE 1-4 (CONT)**
**Electrical Characteristics**

| Characteristic | Performance Requirement |
|---|---|
| **REMOTE CONNECTORS AND SWITCHES (CONT)** | |
| Probe Power (cont) | |
| Pin 3 | −15 V. |
| Pin 4 | +15 V. |
| Z-AXIS INPUT (External) | Connector (bnc) on rear panel. |
| Polarity and Sensitivity | Positive 2 V provides complete blanking from maximum intensity condition. Negative 2 V provides complete unblanking from minimum intensity condition. |
| Low Frequency Limit | Dc. |
| Input Resistance | Approximately 500 Ω. |
| Input Capacitance | Less than 50 pF. |
| Open Circuit Voltage | 0 V. |
| Maximum Safe Input Voltage | 15 V, dc plus peak ac. |
| Maximum Repetition Rate | 1 MHz. |
| **POWER SOURCE** | |
| Voltage Range (AC, RMS) | Selected by rear-panel LINE VOLTAGE SELECTOR. |
| 115 V Rated | From 90 V to 132 V. |
| 230 V Rated | From 180 V to 250 V. |
| Line Frequency | From 48 Hz to 440 Hz. |
| Maximum Power Consumption | 165 W, worst case. |
| Maximum Current | 3.3 A at 60 Hz, 90 V Line. |
| | 1.7 A at 60 Hz, 180 V Line. |
| Fuse | 4 A fast blow. (For both LINE VOLTAGE SELECTOR settings.) |



http://manoman.sqhill.com

**TABLE 1-5**
**Environmental Characteristics**

| Characteristics | Information |
|---|---|
| **NOTE**<br>*This instrument will meet the electrical characteristics given in the Performance Requirement column of Table 1-4 over the following environmental limits.* | |
| Temperature | |
| Operating | 0° to +50° C. |
| Storage | -55° to +75° C. |
| Altitude | |
| Operating | 5 km (15,000 feet). |
| Storage | 15 km (50,000 feet). |
| EMC (Electromagnetic Compatibility) | **NOTE**<br>*The EMI mesh filter must be installed and any unused plug-in compartments must be covered with a blank plug-in panel (EMI shielded) in order to meet EMC specifications.*<br><br>Meets requirements of MIL-STD-461B, when tested in accordance with the following test methods of MIL-STD-462:<br><br>CE-03 part 4 curve 1, CS-01 part 4, CS-02 part 4, CS-06 part 5, RE-02 part 4 (limited to 1 GHz), RS-01 part 2, RS-03 part 7 (limited to 1 GHz), and VDE 0871 class B. |

**TABLE 1-6**
**Physical Characteristics**

| Characteristic | Information |
|---|---|
| Ventilation | Safe operating temperature maintained by dc fan. Automatic resetting thermal cutout protects instrument from overheating. |
| Finish | Anodized front panel. |
| Overall Dimensions (measured at maximum points) | See Figure 1-1. |
| Height | 177 mm (6.98 inches). |
| Width | 483 mm (19.0 inches). |
| Length | 742 mm (29.22 inches). |
| Net Weight (Instrument without plug-in units) | 19.96 kg (44 lbs). |



http://manoman.sqhill.com

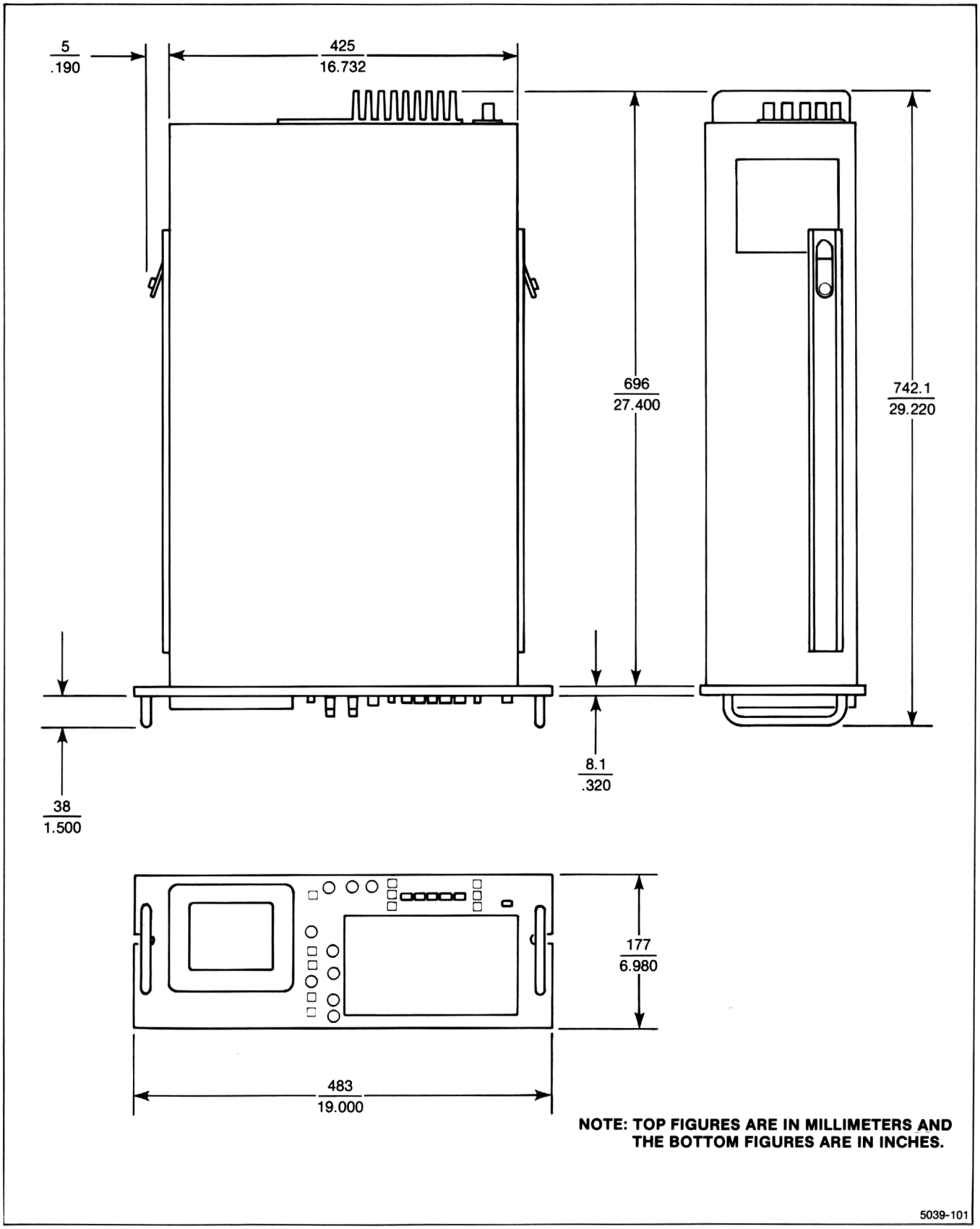


**Figure 1-1. Dimensions of R7103.**



http://manoman.sqhill.com

## SYSTEM ELECTRICAL SPECIFICATION

Your Tektronix R7103 Oscilloscope system provides exceptional flexibility in operation with a wide choice of general- and special-purpose plug-in units. The type number of a particular plug-in unit identifies its usage as follows:

The first digit (7) denotes that the unit is designed to operate in a 7000-series oscilloscope system.

The second letter describes the purpose of the plug-in unit:

A—Amplifier
B—"Real-time" time-base
C—Curve tracer
D—Digital unit
L—Spectrum analyzer
M—Miscellaneous
S—Sampling unit
T—Sampling time-base

The third and fourth digits of the plug-in type number carry no special connotation.

A "N" suffix letter added to the normal four-digit type number means that the instrument does not have the circuitry necessary to encode data for the 7000-series readout system.

Table 1-7 lists plug-in units which are incompatible with the R7103, gives reasons for that incompatibility, and lists the symptoms that will occur if the unit is used in the R7103.

Table 1-8 lists the vertical specifications which are system dependent. For more complete specifications on plug-in units for the 7000-series oscilloscope system, refer to the Tektronix Products catalog.

Table 1-9 lists the horizontal specifications which are system dependent. For more complete specifications on plug-in units for the 7000-series oscilloscope system, refer to the Tektronix Products catalog.

**TABLE 1-7**
**Plug-In Incompatibility**

*The R7103 Oscilloscope is compatible with Tektronix 7000-Series Plug-In units with the exceptions listed in the following table.*

| Plug-In Conditions | Operating Conditions | Symptoms | Cause |
|---|---|---|---|
| 7L13 | 7L13 set for single-sweep operation. | 7L13 will not start by remote or camera connection. | 7L13 does not provide single-sweep reset. |
| 7L5 | 7L5 set for single-scan operation. | Pulsed readout and pulsed graticule from + gate source do not operate normally. | 7L5 Sweep Gate remains high. |
| 7S12 | 7S12 set for single-scan operation. | 7S12 will not start by remote or camera reset connector. | 7S12 does not provide single-sweep reset. |
| 7B50<br>7B51<br>7B52<br>7B53N | All | Leading edge of triggering waveform cannot be viewed. | R7103 delay line length. |
| 7B53AN<br>7B53A | Intensified zone. | The intensified zone is too bright and may be the only part of the display visible. | No contrast control. |
| 7B92<br>7B92A | Time base set for alternate and single-sweep modes. | Pulsed readout and pulsed graticule from + gate source do not operate normally. | Time base sweeps only once when reset, whereas both main and delayed sweeps are required to produce a holdoff pulse. |
| 7B85 | 7B85 set for single sweep operation with △ time function operational. | Pulsed readout and pulsed graticule from + gate source do not operate normally. | 7B85 sweeps once but needs to sweep twice to generate holdoff pulse. |



http://manoman.sghill.com

**TABLE 1-7 (CONT)**
**Plug-In Incompatibility**

| Plug-In Conditions | Operating Conditions | Symptoms | Cause |
|---|---|---|---|
| 7B15<br>7B85 | Delta time function. | No intensified zones, no second sweep. | |
| 7B50<br>7B51<br>7B52<br>7B53,A<br>7B70<br>7B71 | Fast sweep rates (time per division typically 50 ns/div or faster). | Sweep nonlinearities and timing errors, particularly when externally triggered. | Extremely wide bandwidth of the R7103 horizontal system allows resolution of sweep aberrations and trigger crosstalk. |
| 7D01<br>7D02<br>7D20 | Any | Not compatible with the R7103 Oscilloscope. Any crt damage caused by use of the 7D01 or 7D02 or 7D20 in the R7103 Oscilloscope will not be covered under instrument warranty. | The R7103 display from these Logic Analyzers can cause permanent reduction in crt microchannel plate gain; consequently, a permanent reduction in writing rate. For more information, refer to "Reduction of Display Gain with Display Output Charge," in Section 2, Operating Instructions. |

**TABLE 1-8**
**R7103 Oscilloscope Vertical System Specification**

| Amplifier Plug-In Unit | Probe | Bandwidth (MHz) | Rise Time (ns) | 0° to +50° C EXT CAL | Accuracy (1%)[1] 0° to +50° C INT CAL | VERT SIG OUT BW (MHz) | VERT SIG OUT Tr (ns) |
|---|---|---|---|---|---|---|---|
| 7A11 | Integral | 250 | 1.4 | 2 | 3 | 150 MHz | 2.4 ns |
| 7A12 | None | 105 | 3.4 | 2 | 3 | 110 MHz | 3.2 ns |
| | P6053B | | | 3 | 4 | | |
| 7A13 | None | 100 | 3.5 | 1.5 | 2.5 | 100 MHz | 3.5 ns |
| | P6053B | | | | | 100 MHz | 3.5 ns |
| | P6055 | 65 | 5.4 | | | 65 MHz | 5.4 ns |
| 7A14 | P6021 | 55 | 6.4 | 2 | 3 | 50 MHz | 7.0 ns |
| | P6022 | 110 | 3.2 | | | 100 MHz | 3.5 ns |
| 7A15A/N | None | 80 | 4.4 | 2 | 3 | 70 MHz | 5.0 ns |
| | P6053A | | | 3 | 4 | | |
| 7A16A | None | 225 | 1.6 | 2 | 3 | 150 MHz | 2.4 ns |
| | P6053B | | | 3 | 4 | | |
| 7A17 | None | 150 | 2.4 | | | 15 MHz | 24 ns |

[1] **Deflection Factor accuracy is checked as follows:**
**EXT CAL 0° to +50° C: Plug-in gain set at a temperature within 10° C of operating temperature, using an external calibrator with accuracy within 0.25%.**
**INT CAL 0° to +50° C: Plug-in gain set using the oscilloscope calibrator (within 10° C of the operating temperature) in a temperature range between 0° and +50° C.**



http://manoman.sqhill.com

**TABLE 1-8 (CONT)**
**R7103 Oscilloscope Vertical System Specification**

| Amplifier Plug-In Unit | Probe | Bandwidth (MHz) | Rise Time (ns) | 0° to +50° C EXT CAL | Accuracy (1%)[1] 0° to +50° C INT CAL | VERT SIG OUT BW (MHz) | VERT SIG OUT Tr (ns) |
|---|---|---|---|---|---|---|---|
| 7A18 | None | 75 | 4.7 | 2 | 3 | 70 MHz | 5.0 ns |
| | P6053B | | | 3 | 4 | | |
| 7A19 | None | 600 | 0.6 | 3 | 4 | 600 MHz | 0.6 ns |
| | P6056 | | | 4 | 5 | | |
| | P6057 | | | | | | |
| | P6201 | 500 | 0.7 | | | 500 MHz | 0.7 ns |
| 7A22 | None or Any | 1 MHz (within 10%) | 350 (within 9%) | 2 | 3 | 1.0 MHz ±10% | 350 ns ±9% |
| 7A24 | None | 400 | 0.9 | 3 | 4 | 200 MHz | 1.75 ns |
| | P6056, P6057 | | | 4 | 5 | | |
| | P6201 | 350 | 1.0 | | | | |
| 7A26 | None | 200[2] | 1.75[2] | 2 | 3 | 150 MHz | 2.4 ns |
| | P6053B | | | 3 | 4 | | |
| 7A29 | None | 1000[3] | 0.35[3] | 3 | 4 | 750 MHz | 0.47 ns |
| | P6056 | | | 4 | 5 | 700 MHz | 0.50 ns |
| | P6057 | 800 | 0.45 | | | 600 MHz | 0.60 ns |
| | P6201 | 600 | 0.60 | | | 500 MHz | 0.70 ns |
| 7A42 | None | 350[3] | 1.0[3] | 3 | 4 | | |
| | P6230 | | | 4 | 5 | | |
| | P6131 | 300[3] | 1.2[3] | | | | |

[1] Deflection Factor accuracy is checked as follows:
EXT CAL 0° to +50° C: Plug-in gain set at a temperature within 10° C of operating temperature, using an external calibrator with accuracy within 0.25%.
INT CAL 0° to +50° C: Plug-in gain set using the oscilloscope calibrator (within 10° C of the operating temperature) in a temperature range between 0° and +50° C.
[2] System temperature range from 0° to +35° C; derate 10% from +35° to +50° C.
[3] System temperature range from 0° to +35° C.



http://manoman.sqhill.com

**TABLE 1-9**
**R7103 Oscilloscope Horizontal System Specification**

| Time Base | Performance Feature | Maximum Calibrated Sweep Rate | Triggering Frequency Range |
|---|---|---|---|
| 7B10 | Delayed Sweep | 200 psec/div | Dc to 1000 MHz |
| 7B15 | Delaying Sweep | 200 psec/div | Dc to 1000 MHz |
| 7B92A | Display Switching | 500 psec/div | Dc to 500 MHz |
| 7B80 | Delayed Sweep | 1 ns/div | Dc to 400 MHz |
| 7B85 | Delaying Sweep | 1 ns/div | Dc to 400 MHz |
| 7B50A | Delayed Sweep | 5 ns/div | Dc to 150 MHz |
| 7B50 Series (except 7B50A) 7B70 Series 7B92 | NOT RECOMMENDED. These time bases are not optimized for the extremely wide horizontal bandwidth of the R7103 and will likely exhibit unacceptable degradation in sweep accuracy and linearity. | | |

# STANDARD ACCESSORIES

Operators Manual ..... 1 ea.
Instruction Manual ..... 1 ea.
Filter, CRT Faceplate, blue ..... 1 ea.
Frame Mask, plastic ..... 1 ea.
Power Cord ..... 1 ea.
EMI Filter, mesh (installed) ..... 1 ea.
Slide, Drawer, exterior ..... 1 pair
Rackmount Kit ..... 1 ea.

For more detailed information, refer to the tabbed Accessories page at the rear of this manual.

# RECOMMENDED ACCESSORIES (not included)

The following accessories are available for use with your R7103 Oscilloscope. For more detailed information refer to the page tabbed "Accessories" at the rear of the instruction manual. Order recommended accessories through your local Tektronix Field Office or representative.

Current Loop Probe Adapter ..... 1 ea.
Camera, for general use ..... 1 ea.



http://manoman.sqhill.com

# OPERATING INSTRUCTIONS

## PRELIMINARY OPERATION

To operate the R7103 effectively, the user must become familiar with its operation and capabilities. This section describes the use of front- and rear-panel controls and connectors.

**WARNING**

*To avoid electric-shock hazard, see Installation in the General Information section of this manual before operating the R7103.*

## REDUCTION OF DISPLAY GAIN WITH DISPLAY OUTPUT CHARGE

It is a characteristic of the R7103 crt to have permanently diminished display gain in locations of sustained trace operation. This gain reduction manifests itself as reduced writing speed. The gain is diminished in proportion to the logarithm of the charge output (current-time product) from a given display area of the microchannel plate image amplifier.

The limited viewing time system with its two panel indicators, LIMITED VIEWING TIME and SHUTDOWN, and its RESET pushbutton, is included to enable long-term use of the crt display by discouraging (1) high continuous-trace-current operation and (2) long-term, unattended trace-on operation:

For average display currents below 25 nA the yellow LIMITED VIEWING TIME indicator remains off, and display shutdown does not occur. When the average display current is 25 nA, the indicator comes on and shutdown occurs in one hour. This time drops to one minute for an average display current of 1.8 $\mu$A. The average display current is limited by feedback to the 1.8 $\mu$A value. (Single-shot display current is not limited by this system.)

The user can minimize gain loss by taking precautions in three areas: (1) Readout intensity, (2) Trace baselines, and (3) X-Y Displays.

**1. Readout intensity**

The fixed location, small area, and often fixed pattern of the readout tends to aggravate the gain loss in this area so it is advised that the readout display intensity be kept low.

**2. Trace baselines**

There will, in time, be distinguishable gain loss in the region of the trace baseline(s). Less severe gain loss will result by using different baseline locations rather than repeatedly using fixed locations for these, such as the 0% line. Operating the timebase in Normal trigger mode rather than Auto trigger mode (bright baseline) will reduce the trace baseline gain loss by removing the trace in the absence of a triggering signal.

**3. X-Y displays**

Operating in an X-Y mode often means more concentrated display current and hence more concentrated associated gain loss. The user will want to take care that stationary spots or small area displays are not allowed to be operated for extended time periods.

## PLUG-IN UNITS

The R7103 accepts up to three Tektronix 7000-series plug-in units, allowing selection of bandwidth, sensitivity, display mode, etc., and provides for future expansion of the system.

The overall capabilities of the system are mainly determined by the characteristics of the selected plug-in units. Some typical combinations are given under Applications, in this section, along with simplified setup instructions. For information on other plug-in units, refer to the current Tektronix Products catalog.

### INSTALLING PLUG-IN UNITS

**CAUTION**

*Before installing or removing plug-in units, turn the R7103 power off to prevent instrument damage.*

To install a plug-in unit, align the slots in the top and bottom of the plug-in unit with the associated guide rails



http://manoman.sqhill.com

in the plug-in compartment. Insert the plug-in unit into the compartment until it locks into place. To remove a plug-in unit, pull outward on the release latch to disengage the plug-in unit. To meet the EMC (electromagnetic compatability) specifications, cover all unused plug-in compartments with an EMC shielded blank plug-in panel, Tektronix Part 016-0155-00.

The gain of the R7103 vertical and horizontal systems has been normalized to allow plug-in units to be interchanged among plug-in compartments without adjustment of the system. The basic calibration of the plug-in units should be checked when installed to verify their accuracy (refer to the operating instructions in the plug-in manual).

## CONTROLS AND CONNECTORS

The R7103 front and rear panels are shown in Figure 2-1 and Figure 2-2. A brief, functional description of each control and connector is included in the illustration. Refer to Detailed Operating Information for additional information.

### FRONT-PANEL COLOR CODING

The R7103 front panel is color coded to define areas by function. Blue identifies the display mode controls; green identifies triggering controls.

Other colors, such as gray, have no functional assignment, but indicate a relationship among controls and/or connectors.

## OPERATORS CHECKOUT PROCEDURE

The Operators Checkout Procedure may be used to verify proper operation of the front-panel controls and to get acquainted with the instrument. Only instrument functions (not measurement quantities or specifications) are checked in the procedure; therefore, a minimum amount of test equipment is required. If performing the Operators Checkout Procedure reveals improper performance or instrument malfunction, check the operation of associated equipment; then refer to qualified service personnel for repair or adjustment of the instrument.

### TEST EQUIPMENT REQUIRED

The following test equipment was used in preparing the Operators Checkout Procedure. Other test equipment that meets these requirements may be substituted. When other equipment is substituted, the control settings or setup may need to be altered.

1. Function Generator

   **Description:** Frequency range, 250 kilohertz to 1 megahertz; output amplitude, two volts peak-to-peak into 50 ohms; waveform, sine wave.

   **Type Used:** Tektronix SG 503 Leveled Sine Wave Generator (used with TM 500 power module).

2. Cables, Coaxial (two required)

   **Description:** Length, 42 inches; connectors, bnc.

   **Type Used:** Type RG-58/U, 50-ohm coaxial, Tektronix part 012-0057-01.

3. Adapter, bnc 'T'

   **Description:** Connectors, bnc female, two; bnc male, one.

   **Type Used:** bnc T adapter, Tektronix Part 103-0030-00.

4. Adapter

   **Description:** Connectors, bnc female to bnc female.

   **Type Used:** Bnc female to bnc female adapter, Tektronix Part 103-0028-00.

### PRELIMINARY SETUP

1. Set the front-panel controls as follows:

   INTENSITY ..... counterclockwise
   FOCUS ..... midrange
   READOUT ..... OFF
   GRAT ILLUM ..... counterclockwise
   POWER ..... OFF
   CALIBRATOR ..... 4 V
   VERTICAL MODE ..... LEFT
   TRIGGER SOURCE ..... VERT MODE

2. Connect the R7103 to a power source that meets its voltage and frequency requirements. If the available line voltage is outside the limits of the LINE VOLTAGE SELECTOR (on rear panel) setting, see Operating Power Information under Installation (General Information section).

3. Install Tektronix 7A-series amplifier units in the LEFT VERT and RIGHT VERT compartments. Install a Tektronix 7B-series time base in the HORIZ compartment.

4. Press the POWER switch to the on (locked in) position.



http://manoman.sqhill.com

5. Set the time base as follows:

   Time/div ..... 1 ms
   Triggering
     Mode ..... Auto
     Coupling ..... AC
     Source ..... Int

6. Rotate the INTENSITY control until the trace is at a desirable viewing level (near midrange).

7. Connect the CALIBRATOR output to the input of the left amplifier unit with a 42-inch coaxial cable.

8. Set the left amplifier deflection factor to display a signal amplitude of two divisions on the crt.

9. Set the time-base Triggering Level control for a stable display.

## DISPLAY FOCUS

10. Rotate the FOCUS and ASTIG controls and observe the square-wave display. Notice that the thickness of the trace varies. Set the FOCUS and ASTIG controls for a well-defined trace.

## TRACE ALIGNMENT

11. Disconnect the input signal. Using the left amplifier position control, align the trace with the center horizontal graticule line. If necessary use the TRACE ROTATION control to align the trace with the center graticule line.

## GRATICULE ILLUMINATION

12. Rotate the GRAT ILLUM control throughout its range and notice that the graticule lines illuminate more brightly as the control is turned clockwise.

## CONTROL ILLUMINATION

13. Notice that the lighted push buttons are illuminated. Sequentially press all the VERTICAL MODE pushbuttons and watch the lights; an illuminated button indicates an active control. Set the CONTROL ILLUMINATION switch to MEDIUM, and observe that the lighted push buttons on the plug-in units are dimmed.

14. Set the rear-panel CONTROL ILLUMINATION switch to the HIGH position.

## VERTICAL DEFLECTION SYSTEM

15. Connect the 4 V CALIBRATOR output to the input connectors of both amplifier units with two coaxial cables and a bnc T connector. Set the deflection factor of the left amplifier to display about two divisions of signal on the crt.

16. Notice that the position control of the left amplifier affects the vertical position of the displayed trace. Position the trace to the upper half of the graticule. (The right amplifier's position control should not affect the trace position.)

17. Set the VERTICAL MODE selector to RIGHT. Set the deflection factor of the right amplifier to display about two divisions of signal on the crt.

18. Notice that the position control of the right amplifier affects the vertical position of the displayed trace. (The left amplifier's position control should not affect the trace position.) Set the trace to the lower half of the graticule.

19. Set the VERTICAL MODE selector to ALT. Two traces should be displayed on the crt. The top trace is produced by the left amplifier and the bottom trace is produced by the right amplifier. Set the time-base to 50 ms; notice that the display alternates between the left and right amplifier plug-in units after each sweep. Turn the time-base Time/div control through its range and note that the display alternates vertical amplifiers at all sweep rates.

20. Set the VERTICAL MODE selector to CHOP. Turn the time-base Time/Div control through its range. A dual-trace display will be presented at all sweep rates, and both amplifier signals are displayed by the time base on a time-sharing basis. Set the time-base to 0.5 ms/div.

21. Set the VERTICAL MODE selector to ADD. The display should be four divisions in amplitude. Notice that the Position control of either amplifier moves the display. Set the VERTICAL MODE selector to LEFT.

## HORIZONTAL DEFLECTION SYSTEM

22. Set the start of the trace to the left graticule line with the time-base position control.

23. Set the CALIBRATOR to 0.4 V. Set the VERTICAL MODE to CHOP. Four traces should be displayed on the crt. If not, adjust the position controls of the amplifiers to bring the four traces into view. Set the position controls of the plug-in units to identify which trace is produced from each plug-in unit (if amplifier units have the identify feature, they can be used to identify the traces).

## TRIGGERING

24. Set the VERTICAL MODE selector to LEFT. Center the display on the crt with the left amplifier Position control. Disconnect the input signal from the right amplifier connector. Sequentially select all of the



http://manoman.sqhill.com

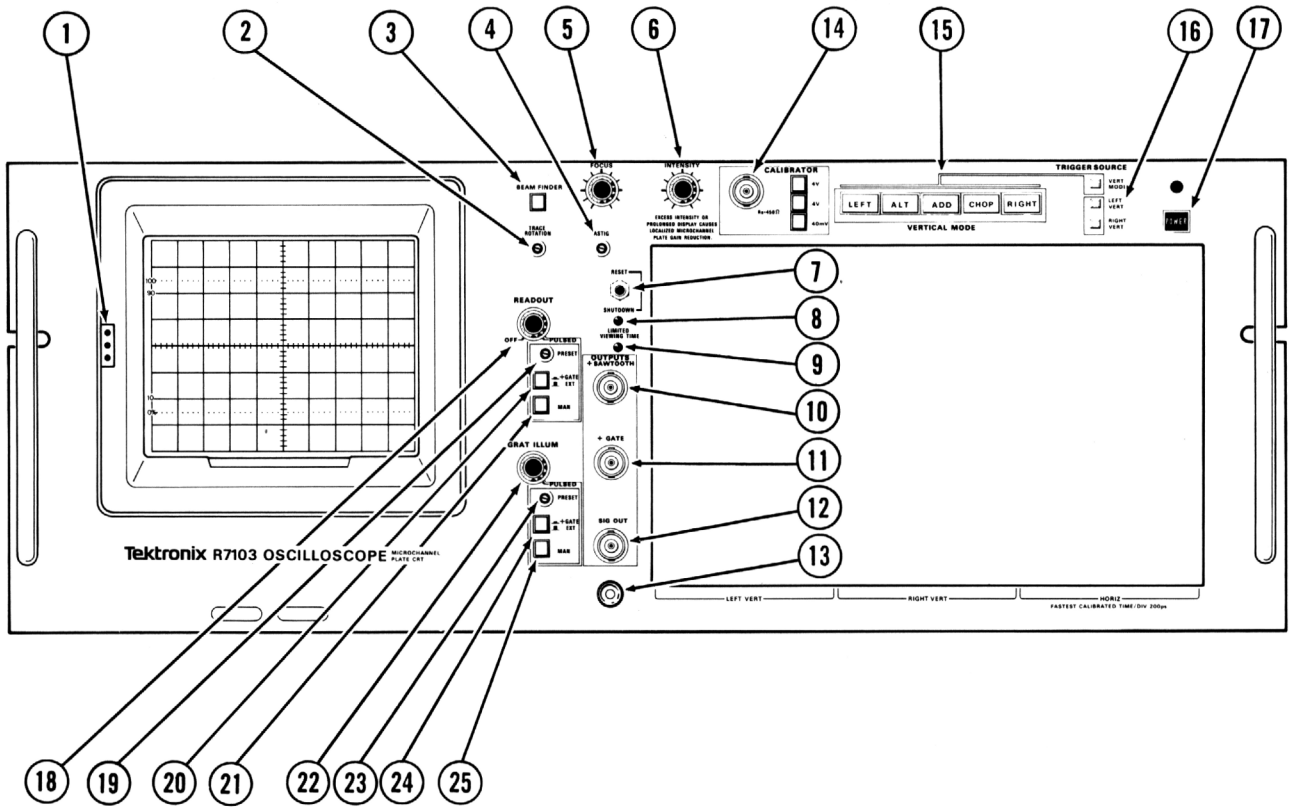


(1) **Camera Power Connector (not labeled)**—Three-pin connector provides power to operate camera; it also receives single-sweep reset signal.

(2) **TRACE ROTATION**—screwdriver adjustment to align trace with graticule line.

(3) **BEAMFINDER button**—when pressed, compresses and defocuses display within graticule area.

(4) **ASTIG**—screwdriver adjustment; used with FOCUS control to obtain a well-defined display.

(5) **FOCUS control**—optimizes crt trace definition.

(6) **INTENSITY control**—sets brightness of trace produced by the plug-in unit installed in the horizontal plug-in compartment.

5039-201A

**Figure 2-1. Front-panel controls, connectors, and indicators.**



http://manoman.sqhill.com

(7) **RESET button**—when pressed, initiates another cycle of display time.

(8) **SHUTDOWN Indicator**—when lit, indicates that crt display is off.

(9) **LIMITED VIEWING TIME Indicator**—indicates that beam intensity is set at level high enough to cause crt display shutdown to occur.

(10) **+SAWTOOTH connector**—furnishes sawtooth signal derived from the time-base sweep signal.

(11) **+GATE connector**—furnishes positive-going gate signal from the time-base in the HORIZ plug-in compartment.

(12) **SIG OUT connector**—provides output signal from compatible vertical plug-in units installed in left or right vertical compartments, as selected by the TRIGGER SOURCE selector.

(13) **Ground connector (not labeled)**—binding post for establishing common ground for associated equipment.

(14) **CALIBRATOR connector and 4 V, .4 V, and 40 mV buttons**—the connector provides an accurate square-wave voltage as selected by the button that is pressed in.

(15) **VERTICAL MODE buttons**—select source of input signal (LEFT or RIGHT) and mode of display (ADD, ALT, or CHOP).

(16) **TRIGGER SOURCE buttons**—select source of signal to trigger the plug-in unit in the HORIZONTAL compartment.

(17) **POWER switch and indicator**—controls power to instrument and indicates when instrument is turned on.

(18) **READOUT control**—sets brightness of readout display. When set fully counterclockwise, in OFF position, disables readout system. When set fully clockwise, in PULSED position, the readout system operates in pulsed mode. It produces one frame of readout for each +Gate or external pulse it receives, as selected by the +GATE/EXT button (see item 20).

(19) **READOUT PRESET adjustment**—screwdriver adjustment that sets the brightness of the readout display when the READOUT control is set to PULSED position.

(20) **READOUT +GATE/EXT button**—selects the +Gate from the time base or a signal from the GRATICULE/READOUT SINGLE SHOT input on the rear panel as the stimulus for the readout display.

(21) **READOUT MAN button**—when pressed, causes one frame of readout display.

(22) **GRAT ILLUM control**—sets level of graticule illumination. When set fully clockwise to the PULSED position, the graticule illumination system operates in pulsed mode. The graticule will be illuminated once for each +Gate or Ext trigger pulse from the rear panel, as selected by the GRAT ILLUM +GATE/EXT button (see item 24).

(23) **GRAT ILLUM PRESET adjustment**—screwdriver adjustment that sets the level of graticule illumination when the GRAT ILLUM control is set to PULSED position.

(24) **GRAT ILLUM +GATE/EXT button**—selects the +Gate from the time base or a signal from the GRATICULE/READOUT SINGLE SHOT input on the rear panel as the stimulus for the graticule illumination circuit.

(25) **GRAT ILLUM MAN button**—when pressed, causes one momentary illumination of the graticule.

5039-201B

**Figure 2-1 (cont). Front-panel controls, connectors, and indicators.**



http://manoman.sqhill.com

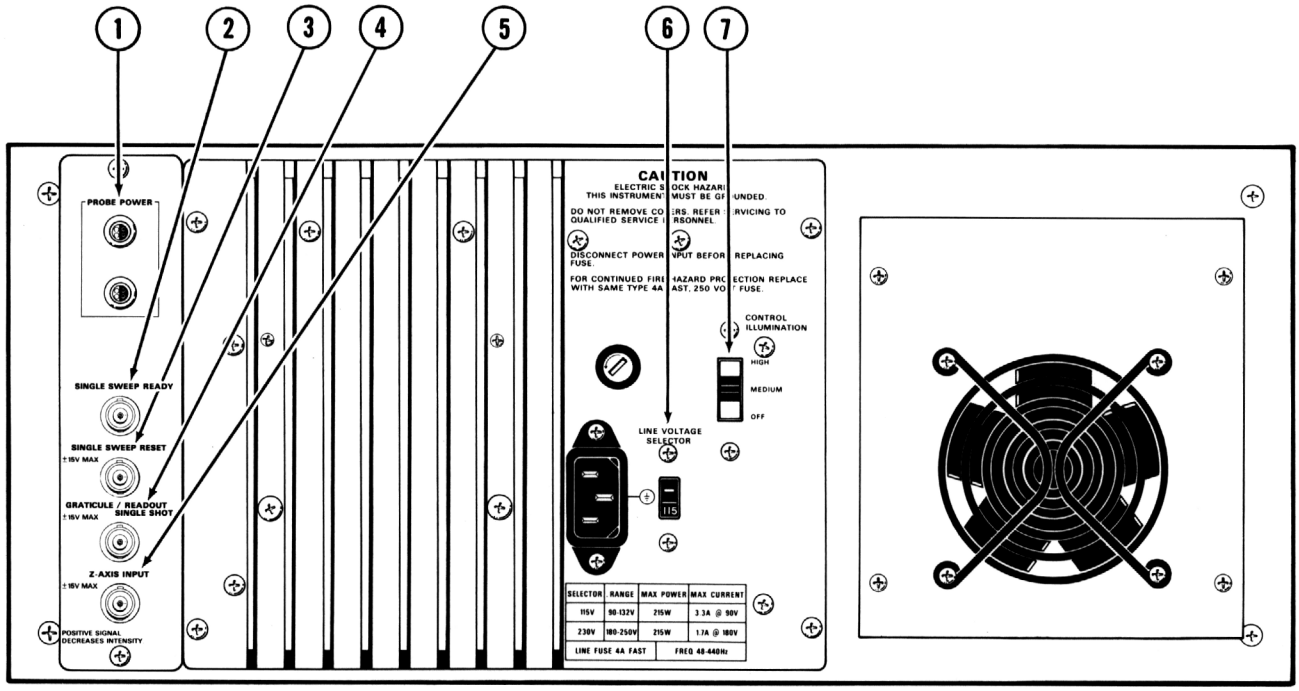


(1) **PROBE POWER connectors (2)**—provide power for active probe system.

(2) **SINGLE SWEEP READY connector**—provides the single-sweep ready signal from the time base in the HORIZ plug-in compartment.

(3) **SINGLE SWEEP RESET connector**—provides means of connecting an external signal to the single-sweep circuit in the time base in HORIZ plug-in compartment. Also resets the Limited View Time function.

(4) **GRATICULE/READOUT SINGLE SHOT connector**—provides input for signal to actuate single-shot graticule illumination and single-frame readout. The READOUT and GRAT ILLUM controls must be set to PULSED, and the READOUT +GATE/EXT and GRAT ILLUM +GATE/EXT buttons must be set to EXT (out).

(5) **Z-AXIS INPUT connector**—provides path for signal to intensity-modulate the display.

(6) **LINE-VOLTAGE SELECTOR**—sets the R7103 to accept 115- or 230-volt nominal line voltage.

(7) **CONTROL ILLUMINATION selector**—controls the illumination level of the lighted pushbuttons on associated plug-in units, and the TRIGGER SOURCE buttons.

5039-202

**Figure 2-2. Rear-panel controls, connectors, and indicators.**



http://manoman.sqhill.com

VERTICAL MODE selector positions. Notice that a stable display is obtained for all positions of the VERTICAL MODE selector (straight line display in RIGHT position).

25. Set the TRIGGER SOURCE selector to LEFT VERT. Again, sequentially select all of the VERTICAL MODE selector positions; notice that the display is again stable in all positions, as in the previous step, and that the LEFT VERT pushbutton is illuminated.

26. Set the TRIGGER SOURCE selector to RIGHT VERT. Sequentially select all of the VERTICAL MODE selector positions and notice that a stable display cannot be obtained in any position (this is because there is no input signal connected to the right vertical amplifier) and that the RIGHT VERT pushbutton is illuminated. Return the A TRIGGER SOURCE selector to VERT MODE and notice that it is illuminated.

## READOUT

27. Turn the READOUT control clockwise until an alphanumeric display is visible within the top or bottom division of the crt. Change the deflection factor of the amplifier selected for display. The readout position of the display should change as the deflection factor is changed. Likewise, change the sweep rate of the time base; the readout display for the time base should change as the sweep rate is changed.

28. Set the time base for X10 magnification. Notice that the readout display will change to indicate the correct magnified sweep rate. If a readout-coded 10X probe is available for use with the amplifier, install it on the input connector of the right amplifier. Notice that the deflection factor indicated by the readout is multiplied by 10 when the probe is connected. Return the time base to unmagnified sweep operation and disconnect the probe.

29. Sequentially select all of the positions of the VERTICAL MODE selector. Notice that the readout from a particular plug-in occupies a specific location on the display area. If either vertical amplifier is a dual-trace unit, the readout for channel 2 is displayed within the lower division of the crt. Return the VERTICAL MODE to LEFT. Set the READOUT control to OFF.

## BEAMFINDER

30. Set the deflection factor of the left amplifier to 10 millivolts/division and the calibrator for a 4 V output. Notice that the square-wave display is not visible, because the deflection exceeds the scan area of the crt.

31. Press the BEAMFINDER pushbutton; notice that the display is returned to the viewing area in compressed form. Release the BEAMFINDER switch and notice that the display again disappears from the viewing area.

32. With the BEAMFINDER button pushed in, increase the amplifier deflection factor until the display is reduced to about two divisions vertically. Adjust the Position control of the displayed amplifier to position the compressed display near the center of the graticule. Release the BEAMFINDER button and observe that the display remains within the viewing area.

## CALIBRATOR

33. Connect the CALIBRATOR output to both the left and right vertical units with two coaxial cables and a bnc T connector. The display amplitude should be approximately two divisions. If not, adjust the deflection factor accordingly.

34. Press the different CALIBRATOR push buttons (labeled 4 V, 0.4 V, and 40 mV) and notice that the displayed signal changes accordingly (CALIBRATOR output must be terminated into more than a 100 kilohm load for stated output). When the CALIBRATOR output is terminated into 50 ohms, the output is 10 percent of the stated output.

## Z-AXIS INPUT

35. If an external signal is available (two volts peak-to-peak minimum), the function of the Z-AXIS INPUT can be demonstrated. Connect the external signal to the input connector of the displayed amplifier and the Z-AXIS INPUT connector. Set the sweep rate of the time base to display about five cycles of signal. Set the amplitude of the signal generator until intensity modulation is visible on the display (change the amplifier deflection factor as necessary to produce an on-screen display). The positive peaks of the waveform should be blanked and the negative peaks should be intensified. Notice that the setting of the intensity controls determines the amount of intensity modulation that is visible. Disconnect the cables.

## INTENSITY LIMITING

36. Connect a sine-wave to the input of the displayed amplifier. Set the amplifier deflection factor to display eight divisions of signal. Set the time base to display at least 20 cycles. Rotate the INTENSITY control clockwise and observe that the yellow LIMITED VIEWING TIME light turns on, then flashes on and off as the intensity control is rotated further clockwise. With the LIMITED VIEWING TIME light flashing, the intensity is limited. Rotating the



http://manoman.sqhill.com

intensity control clockwise does not increase the displayed brightness. Notice that after about one minute the red SHUTDOWN light starts flashing and after about 10 seconds turns on steady; at the same time the crt display is turned off. Press the RESET button and the display should return.

## DETAILED OPERATING INFORMATION

### GRATICULE

The graticule is marked on the inside of the crt faceplate to enable accurate, parallax-free measurements. The graticule has eight vertical and 10 horizontal divisions. Each divison is a 0.85 centimeter square divided into five minor divisions along each axis. The vertical gain and horizontal timing of the plug-in units are calibrated to the graticule so that accurate measurements can be made from the crt. The illumination of the graticule lines can be varied with the GRAT ILLUM control.

Figure 2-3 shows the graticule and defines the various measurement lines. The terminology defined here will be used in all discussions involving measurements from the graticule. The markings: 0%, 10%, 90%, and 100% on the left side of the graticule are for accurate rise-time measurements.

### GRATICULE ILLUMINATION

The GRAT ILLUM control varies the illumination of the graticule lines. The GRAT ILLUM can also be operated in the PULSED mode. With the GRAT ILLUM control set to the PULSED position (detent), and the +GATE/EXT switch set to +GATE, the graticule will be illuminated momentarily after the +GATE occurs. With the GRAT ILLUM +GATE/EXT switch set to EXT the momentary graticule illumination can be actuated by applying a remote signal to the rear panel GRATICULE/READOUT SINGLE SHOT connector (see Table 1-4 for specifications). When operating in the PULSED mode, the level of illumination is controlled by the GRAT ILLUM PRESET screwdriver adjustment.

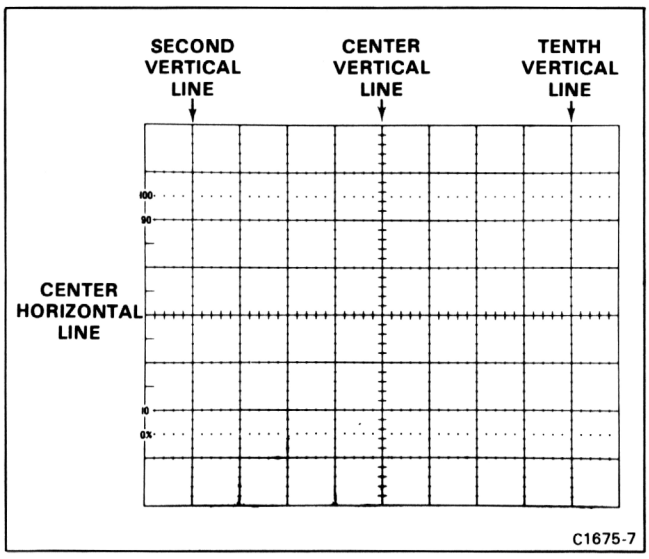


**Figure 2-3. Definition of graticule measurement lines.**

### LIGHT FILTER/EMI FILTER

The mesh filter installed in front of the crt improves the display contrast when viewing the crt under high-ambient-light conditions. This metal screen, with its matte black surface, reduces light reflections and provides shielding against radiated electro-magnetic interference (EMI). It may be removed for waveform photography or for viewing high-writing-rate displays. To remove, pull outward from the bottom and replace it with the plastic frame mask (standard accessory).

**WARNING**

*Do not remove the clear plastic face-protector (implosion shield) that covers the crt faceplate; the implosion shield provides protection to the operator from crt implosion and protects the crt face from scratches.*

The blue crt faceplate filter may be used instead of the mesh filter to reduce crt reflections in high-ambient-light conditions. However, it does not provide EMI shielding. When used, this filter should be installed behind the plastic frame mask that is used in lieu of the mesh filter.

### CONTROL ILLUMINATION

The CONTROL ILLUMINATION switch, located on the rear panel, sets the illumination level of the TRIGGER SOURCE buttons, and the lighted pushbuttons on the plug-in units. The positions available are OFF, MEDIUM, and HIGH. The CONTROL ILLUMINATION switch does not affect the function-indicator lights (such as triggered or single-sweep ready lights).

### INTENSITY CONTROL

The INTENSITY control determines the brightness of the display produced by the plug-in unit installed in the HORIZ compartment. The READOUT intensity control affects the brightness of the readout portion of the crt display only.



http://manoman.sghill.com

**CAUTION**

*Be careful when operating the INTENSITY control. See Reduction of Display Gain with Display Output Charge at the beginning of this section.*

## DISPLAY FOCUS

The R7103 has an automatic-focusing circuit which maintains optimum focus for all intensity settings after a correct setting of the FOCUS control is established. The easiest way to obtain the correct setting of the FOCUS control is to set the READOUT INTENSITY control so that the readout portion of the display is clearly visible. Adjust the FOCUS control for the best definition of the readout display.

## ASTIGMATISM-FOCUS ADJUSTMENTS

If a well-defined display cannot be obtained with the FOCUS control, adjust the ASTIG adjustment as follows:

**NOTE**

*To check for proper setting of the ASTIG adjustment, slowly turn the FOCUS control through the optimum setting. If the ASTIG adjustment is correctly set, the vertical and horizontal portions of the display will focus at the same position of the FOCUS control. This setting of the ASTIG adjustment should be correct for any display.*

1. Install an amplifier in the LEFT VERT compartment and a time base in the HORIZ compartment.
2. Set the VERTICAL MODE to LEFT.
3. Connect the output of a sine-wave generator to the input of the amplifier. Set the sine-wave generator frequency to 1 kilohertz and the vertical amplifier deflection factor for a two-division display.
4. Set the time-base Time/Div to 0.2 millisecond and the triggering for a stable display. Set the INTENSITY control so the display is at a usable intensity level (about midrange).
5. Turn the FOCUS control fully counterclockwise and set the ASTIG adjustment to midrange.
6. Set the FOCUS control so the thickness of the sine-wave trace is as thin as possible.
7. Adjust the ASTIG adjustment so the width of the sine-wave trace is as thin as possible.
8. Repeat steps 6 and 7 for the best overall focus.

## BEAMFINDER

The BEAMFINDER helps to locate a display that overscans the crt viewing area vertically or horizontally. When the BEAMFINDER button is pressed, the display is compressed and defocused within the graticule area. To locate and reposition an overscanned display, use the following procedure:

1. Press the BEAMFINDER button. While the display is compressed adjust the vertical and horizontal position controls to center the display. Change the vertical and horizontal deflection factors until the vertical deflection is about four divisions high and the horizontal deflection is about six divisions wide (the horizontal deflection need be reduced only when operating in an X-Y mode).
2. Release the BEAMFINDER button; the display should remain within the graticule area.

## TRACE ALIGNMENT

The TRACE ROTATION control allows the trace to be aligned with the horizontal graticule lines. To set the control, position the trace to the center horizontal line and adjust the TRACE ROTATION control so that the trace is parallel with the center horizontal graticule line.

## READOUT DISPLAY

The Readout System provides an alphanumeric display of information on the crt along with the analog waveform display. The information displayed by the Readout System is obtained from the plug-in units installed in the plug-in compartments.

The readout information from each channel of the plug-in units is called a word. Up to six words of readout information can be displayed on the crt (two channels from each of the three plug-in compartments). The location of each readout word is fixed and is directly related to the plug-in unit and channel of origin. Figure 2-4 shows the area of the graticule where the readout from each plug-in unit and/or channel is displayed. Notice that the readout from channel 1 of each plug-in unit is displayed in the top division of the graticule and the readout from channel 2 is displayed directly below in the bottom division of the graticule. Usually, the readout information for plug in units and/or channels, which are selected by the mode switches, appear in the readout display. (Some special purpose plug-in units may override the mode switches to display readout even though the compartment is not selected for display.)

### Readout Identify

An "Identify" feature is provided by the Readout System to correlate the readout word with the originating plug-



http://manoman.sqhill.com

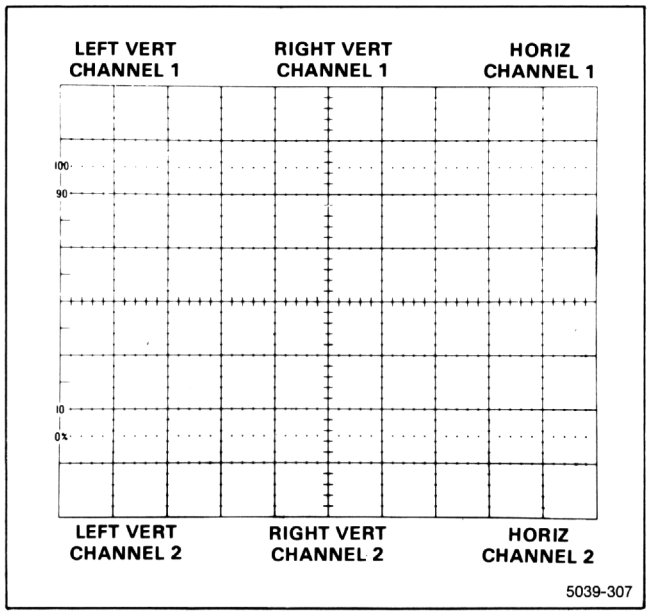


**Figure 2-4. Location of readout on crt.**

in unit and channel (amplifier units only). When the "identify" button of an amplifier unit is pressed, the word IDENTIFY appears in the readout location allocated to that plug-in and channel. Other readout words in the display remain unchanged. When the "identify" button is released, the readout display from this plug-in channel is again displayed. Circuitry may also be provided in the amplifier unit to produce a noticeable change in the analog waveform display to identify the associated trace when the "identify" button is pressed (see the plug-in unit instruction manual for details).

### Readout Intensity

The READOUT control determines the intensity of the readout portion of the display only, independently of the other traces. The Readout System is inoperative when the READOUT control is in the OFF position (fully counterclockwise). This may be desirable when the top and bottom divisions of the graticule are to be used for waveform display or when the trace interruptions necessary to display characters interfere with the waveform display.

### Readout Modes

The READOUT control determines the operating mode of the Readout System. With the READOUT control set to free run (out of OFF or PULSED detent positions) the Readout System operates continuously, interrupting the crt display at random (for about 20 microseconds) in order to write each character on the crt. With the READOUT control set to the PULSED position, the Readout System operates in a triggered mode; one complete frame (up to six words) of readout is displayed. The +GATE or EXT switch determines whether Readout is displayed at the end of the +GATE or when an external signal is applied to the rear-panel GRATICULE/READOUT SINGLE SHOT input.

One frame of readout information is also displayed each time the READOUT MAN (manual) pushbutton is pressed. The brightness of the readout display, when operating in the PULSED mode, is set by the READOUT PRESET control.

## CARE OF CRT SCREEN

The following precautions will prolong the useful life of the crt screen used in this instrument.

1. Use minimum beam intensity to produce a clear, well-defined display.

2. Avoid repeated use of the same area of the screen. If a particular waveform is to be displayed for a long period of time, change the vertical position occasionally to use other portions of the display area.

3. Use minimum READOUT INTENSITY to display the Readout. For more information see Reduction of Display Gain with Display Output Charge at the beginning of this section.

## VERTICAL MODE POSSIBILITIES

There are five possible Vertical Modes. The possibilities are multiplied by the variety of plug-in units available for use with the R7103, the interchangeability of plug-in units (i.e., either an amplifier or a time base can be installed in any compartment), and by the capabilities of the plug-in units which are used in the instrument (e.g., a dual-trace amplifier can be used in either of the two single-channel modes, in the dual-trace mode, or in algebraically-added mode). Therefore, it is difficult to list all the display combinations which can occur during use of the R7103 and available plug-in units. Table 2-1 lists the basic possibilities.

### Vertical Modes

When the LEFT or RIGHT VERTICAL MODE button is pressed, only the signal from the plug-in unit in the selected compartment is displayed.

**Alternate Mode.** The ALT position of the VERTICAL MODE selector produces a display which alternates between the LEFT VERT and RIGHT VERT compartments with each sweep of the crt. Although the ALT mode can be used at all sweep rates, the CHOP mode provides a more satisfactory display at sweep rates below 2 milliseconds/division. At these slower sweep rates, alternate-mode switching becomes visible.

Alternate Mode displays have three types of triggering available. When the TRIGGER SOURCE selector is set



http://manoman.sqhill.com

to the VERT MODE position, each sweep is triggered by the signal being displayed on the crt. This provides a stable display of two unrelated signals, but does not indicate the time relationship between the signals. When the LEFT VERT or RIGHT VERT TRIGGER SOURCE button is pressed in, the two signals are displayed showing their true time relation. However, if the signals are not time related, the display from the plug-in that is not providing a trigger signal will be unstable. The trigger source switches are illuminated to indicate the source of the trigger signal.

**Chopped Mode.** The CHOP position of the VERTICAL MODE selector produces a display which is electronically switched between channels at about a one-megahertz rate. In general, the CHOP mode provides the best display at sweep rates slower than about 2 milliseconds/division or whenever dual trace, single-shot phenomena are to be displayed. At faster sweep rates the chopped switching becomes apparent and may interfere with the display.

When the TRIGGER SOURCE selector is set to VERT MODE, the time base is triggered from the left vertical plug-in trigger signal. The LEFT VERT or RIGHT VERT trigger-source positions provide trigger signals to the time-base unit from the selected vertical unit only. The trigger source is indicated by the illuminated trigger source pushbuttons. This allows two time-related signals to be displayed showing true-time relationship. (If the signals are not time-related, the display from the channel that is not providing the trigger signal will appear unstable.)

The CHOP mode can be used to compare two single-shot, transient, or random signals that occur within the time interval determined by the time-base unit (ten times selected sweep rate). To provide correct triggering, the displayed signal which provides the trigger signal must precede the second display in time. Because the signals show true-time relationship, time-difference measurements can be made from the display.

**Algebraic Addition.** The ADD position of the VERTICAL MODE selector can be used (1) to display the sum or difference of two signals, (2) for common-mode rejection to remove an undesired signal, or (3) for dc offset (applying a dc voltage to one channel to offset the dc component of a signal on the other channel). The common-mode rejection ratio between the vertical plug-in compartments is at least 160:1 from dc to 100 MHz. The rejection ratio decreases to 80:1 from 100 MHz to 1 GHz. The overall deflection on the crt in the Add mode is the algebraic sum of the signals from the vertical plug-in units. It is difficult to determine the voltage amplitude of the resultant display unless the amplitude of the signal applied to one of the plug-in units is known. This is particularly true when the vertical units are set to different deflection factors, because it is not obvious which portion of the display results from the signal applied to a given plug-in unit. The polarity and repetition rate of the applied signals will also affect the Add display.

The following precautions should be observed when using Add mode.

1. Do not exceed the input-voltage ratings of the plug-in units.

2. Do not apply large signals to the plug-in inputs. A good rule is not to apply a signal of more than about eight times the vertical deflection factor. Larger voltages may result in a distorted display.

3. To ensure the greatest dynamic range in Add mode, set the position controls of the plug-in units to a setting which would result in a mid-screen display if viewed in the LEFT or RIGHT positions of the VERTICAL MODE selector.

4. For familiar response from each channel, use identical plug-in units and set them for the same input coupling mode.

**TABLE 2-1**
**Displays***

| Vertical Mode | Comments |
|---|---|
| Left | One trace. Vertical deflection from plug-in unit in LEFT VERT plug-in compartment; horizontal deflection from plug-in unit in HORIZ plug-in compartment. |
| Alt | Two traces. Vertical deflection from plug-in units in LEFT VERT and RIGHT VERT; horizontal deflection from plug-in unit in HORIZ plug-in compartment. |
| Add | One trace. Amplitude of vertical deflection is algebraic sum of signals from LEFT VERT and RIGHT VERT plug-in units; horizontal deflection is produced by plug-in unit in HORIZ plug-in compartment. |
| Chop | Two traces. Vertical deflection from plug-in units in LEFT VERT and RIGHT VERT; horizontal deflection from plug-in unit in HORIZ plug-in compartment. |
| Right | One trace. Vertical deflection from plug-in unit in RIGHT VERT plug-in compartment; horizontal deflection from plug-in unit in HORIZ plug-in compartment. |

***Displays given for single-channel vertical and horizontal plug-in units only.**



http://manoman.sqhill.com

## TRIGGER SOURCE

The TRIGGER SOURCE selector selects the internal trigger signals for the HORIZ time base. For most applications, the selector can be left in the VERT MODE position. This is the most convenient position because the internal trigger signal is automatically switched as the VERTICAL MODE selector is changed or as the display is electronically switched between the Left and Right vertical plug-in units, in the ALT position of the VERTICAL MODE selector. It also provides a usable trigger signal in the ADD Vertical Mode, because in this mode the internal trigger signal is the algebraic sum of the signals applied to the vertical plug-in units. In the CHOP position the left vertical plug-in unit is the trigger source. Therefore, the VERT MODE position ensures that the time base receives a trigger signal regardless of the VERTICAL MODE selector setting without the need to change the trigger source selection. The TRIGGER SOURCE selector is illuminated and indicates the source of the trigger.

If correct triggering for the desired display is not obtained in the VERT MODE position, the trigger source for the time base can be changed to obtain the trigger signal from the left or right vertical plug-in unit. The internal trigger signal is obtained from the selected vertical compartment whether or not the plug-in in that compartment is selected for display. If the internal trigger signal is obtained from one of the vertical units while the other vertical unit is selected for display, the internal signal must be time-related to the display signal in order to obtain a triggered (stable) display.

## CALIBRATOR OUTPUT

The Calibrator provides a convenient signal for checking basic vertical gain and sweep timing. The calibrator signal is also useful for adjusting probe compensation as described in probe instruction manuals. The calibrator can be used as a convenient signal source for external equipment.

### Voltage

The Calibrator provides accurate output voltages of 40 millivolts, 0.4 volt, and 4 volts into high impedance loads; or 4 millivolts, 40 millivolts, and 0.4 volt into 50-ohm loads.

### Current

The optional current loop accessory provides a 40-milliampere output current (when the Calibrator is set for a 4-volt output), which can be used to check and calibrate current-measuring probe systems. The current signal is obtained by clipping the probe around the current loop.

### Repetition Rate

The Calibrator repetition rate is 1 kilohertz. The calibrator circuit uses frequency-stable components to maintain accurate frequency and a constant duty factor. Thus, the Calibrator can be used for checking the basic sweep timing of time bases (1-kilohertz rate only).

### Wave Shape

The square-wave CALIBRATOR signal can be used as a reference wave shape when checking or adjusting the compensation of passive, high-resistance probes. The square-wave output from the CALIBRATOR has a flat top; any distortion in the displayed waveform is due to the probe compensation.

## SIGNAL OUTPUTS

### +Sawtooth Out

The +SAWTOOTH OUT connector provides a positive-going sawtooth signal derived from the time base installed in the HORIZ compartment.

The unit of time for the sawtooth output is determined by the time-base Time/Div control. Refer to Table 1-4, in the General Information section, for signal parameters.

### +Gate Out

The +GATE OUT connector provides a positive-going rectangular pulse derived from the time base installed in the horizontal plug-in compartment. The duration of the +GATE signal is the same as the duration of the unmagnified sweep. The amplitude of the +GATE OUT signal is about 0.5 volt into 50 ohms or about 10 volts into 1 megohm.

### Signal Out

The SIG OUT connector provides a sample of the vertical deflection signal. The source of the output signal is determined by the TRIGGER SOURCE selector. In the VERT MODE position of the TRIGGER SOURCE selector, the output signal is determined by the setting of the VERTICAL MODE selector. The output signal in the LEFT and RIGHT positions of the VERTICAL MODE selector is obtained only from the selected vertical unit. In the ALT position of the VERTICAL MODE selector, the output signal at the SIG OUT connector switches between signals from the two vertical units, along with the crt display. However, the vertical output signal in the ADD position is a composite signal. In the CHOP position the signal out is derived from the LEFT vertical plug-in unit.

### Probe Power

The two PROBE POWER connectors on the R7103 rear panel provide operating power for active probe systems. It is not recommended that these connectors be used as a power source for applications other than the



http://manoman.sqhill.com

compatible probes or other accessories which are designed for use with this system.

## DISPLAY PHOTOGRAPHY

A permanent record of the crt display can be obtained with an oscilloscope camera system. The instruction manual for the Tektronix oscilloscope cameras include complete instructions for obtaining waveform photographs.

The crt bezel provides integral mounting for Tektronix oscilloscope cameras. The three pins located on the left side of the crt bezel connect power to compatible camera systems. Control signals are also received from Tektronix automatic cameras to allow camera-controlled single-shot photography (see camera manual for further information).

If the readout portion of the display is to be included on waveform photographs, the following suggestions will aid in obtaining good photographs.

1. Focus the crt display. Focus the camera on the readout portion of the crt display. The auto-focus feature of the R7103 will maintain the traces at optimum focus.

2. Set the READOUT INTENSITY control for the minimum setting that allows the characters to be written. This normally occurs at a slightly lower level than is necessary for complete writing of the waveform display. Some experimenting may be necessary to find the correct level. Too high a setting will result in a broad, poorly defined photograph of the readout display.

3. If single-shot photography is used, set the READOUT and GRAT ILLUM controls to the PULSED position (see Readout Display and Graticule Illumination for complete operating information). Then, the Readout display and graticule illumination occurs in a single-shot manner after the trace is complete (the camera shutter should remain open at least 0.5 second after the sweep is completed to photograph the entire readout and graticule).

## INTENSITY MODULATION

Intensity (Z-axis) modulation can be used to relate a third item of electrical phenomena to the vertical (Y-axis) and the horizontal (X-axis) coordinates without affecting the waveshape of the displayed signal. This is accomplished by changing the intensity of the displayed waveform to provide a "gray scale" display.

The voltage amplitude required for visible trace modulation depends on the setting of the INTENSITY control. A two-volt peak-to-peak signal will completely blank the display even at maximum intensity levels; lower amplitude signals can be used to change only the relative trace brightness. Negative-going signals increase the display intensity and positive-going signals decrease the display intensity. Refer to Table 1-4, in the General Information section, for specifications on Z-axis signal requirements.

Time markers applied to the Z-AXIS INPUT connector provide a direct time reference on the display. With uncalibrated horizontal sweep or X-Y mode operation, the time markers provide a means of reading time directly from the display. If the markers are not time-related to the display waveform, use a single-sweep display.

## REMOTE INPUT SIGNALS

The signal source requirements to operate the remote input functions on the rear panel can be either active (pulse generator, logic circuit, etc.) or passive (switch or relay). Refer to Table 1-4, in the General Information section, for specific parameters on each input.

### Remote Single-Sweep Reset and Limited Viewing Time Reset

An external single-sweep-reset signal can be applied to the time base installed in the horizontal plug-in compartment through the rear-panel SINGLE SWEEP RESET input connector. This remote reset function is a duplication of the manually-operated single-sweep reset function (pushbutton) located on the front panel of the 7B-series time bases. Applying an external single-sweep-reset signal will also reset the Limited Viewing Time feature.,

The SINGLE SWEEP READY output is provided for external indicators. The indicators signify that the time base has been reset, and is ready to present a single sweep when the next trigger pulse occurs. Refer to Table 1-4, in the General Information section of this manual, for signal parameters.

### Remote Graticule and Readout Single Shot

The GRATICULE/READOUT SINGLE SHOT bnc connector (located on the rear panel) allows an external signal to actuate one frame of readout information and one momentary illumination of the graticule when the READOUT INTENSITY and GRAT ILLUM controls are set to PULSED, and the +GATE/EXT pushbuttons for READOUT and GRAT ILLUM are set to EXT. The signal source can be either active (pulse generator, logic circuit, etc.) or passive (switch or relay). Refer to Table 1-4, in the General Information section of this manual, for input requirements.



http://manoman.sqhill.com

# APPLICATIONS

The R7103 Oscilloscope and associated plug-in units provide a flexible measurement system. The capabilities of the system depend mainly upon the plug-in units selected for use with the R7103. Specific applications for the individual plug-in units are described in the plug-in unit instruction manual. The overall system can also be used for many applications which are not described in detail, either in this manual or in the manuals for the individual plug-in units. Contact your Tektronix Field Office or representative for assistance in making specific measurements with this instrument.

The following books describe oscilloscope measurement techniques which can be adapted for use with this instrument.

John D. Lenk, *Handbook of Oscilloscopes, Theory and Application*, Prentice-Hall Inc., Englewood Cliffs, New Jersey, 1968.

J. Czech, *Oscilloscope Measuring Techniques*, Springer-Verlag, New York, 1965.

J. F. Golding, *Measuring Oscilloscopes*, Transatlantic Arts, Inc., 1971

Charles H. Roth, Jr., *Use of the Oscilloscope*, programmed text, Prentice-Hall, Inc., Englewood Cliffs, New Jersey, 1970.

## VERTICAL AMPLIFIER PLUG-IN UNITS

All 7A-series plug-in units can be used with the R7103. Bandwidth and sensitivity ranges should be considered when selecting amplifier plug-in units.

### Single-Trace

Any single-channel amplifier will display a signal, with the sweep provided by any 7B-series time-base. This combination leaves one unused compartment available for other special-purpose units. Blank plug-in panels are available to cover any unfilled plug-in compartments.

### Dual-Trace

A dual-channel amplifier in either vertical compartment can display two separate signals with the other vertical compartment free for other uses.

### Three-Trace

A dual-channel amplifier can be used with any single-channel amplifier to display three separate signals.

### Four-Trace

Two dual-channel amplifiers or one four-channel amplifier can display four separate signals.

## TIME-BASES

The R7103 is compatible with time bases of the 7B10, 7B15, 7B70, 7B80 and 7B90 series. Sweep rates and triggering ranges should be considered when selecting time bases.

**NOTE**

*The 7B50-series time bases are not recommended for use with this instrument, because they require a longer delay line than is used in the R7103. Therefore, the triggering event may not appear on the display.*

## SAMPLING DISPLAYS

Sampling-system plug-in units for the 7000-series oscilloscopes provide displays of fast-changing signals that cannot be examined with other methods. For example, sampling systems available for the R7103 can resolve repetitive signals having less than 10 millivolts of peak amplitude and occurring in less than 1 nanosecond.

The technique used for sampling is very similar in principle to the use of stroboscopic light to study fast motion. Samples of successive waveforms are taken, amplified by a relatively low-bandwidth amplifier, and then displayed on the crt as a replica of the sampled waveforms.

Three sampling systems are available at this time for the 7103: (1) the 7S12, which provides time-domain-reflectometry displays and general-purpose sampling measurements, (2) the 7S11/7T11 system and (3) the 7S14, a dual-channel vertical sampling system, including main and delayed sweep functions. See the Tektronix Products catalog to determine the characteristics of individual units mentioned and of additional units made available after this manual is published.

### Single-Trace Sampling

A single-trace sampling display requires either a double-width 7S12 (which includes a time-base), or the 7S11 sampling unit and the 7T11 sampling sweep unit. Direct interconnections between the 7S11 and the 7T11 require these units to be adjacent, with the 7S11 in the RIGHT VERT compartment and the 7T11 in the HORIZ compartment. If either the 7S12 or the 7S14 is used, it must be located in the right two compartments to make proper connections with the R7103.

### Dual-Trace Sampling

Two 7S11's can be used with a single sampling time base for time-related displays of two signals. Direct interconnections from the Left Vertical 7S11 pass through the Right Vert 7S11 to reach the Horizontal time base.



http://manoman.sqhill.com

The 7S14 is a dual-channel sampling unit with delaying sweep capability. It must be used in the right two plug-in comparF ents.

Dual-trace sampling displays can also be made with a 7S12 in the right two compartments and a 7S11 in the LEFT VERT compartment. In this application, the 7S12 supplies the time base for both traces.

### X-Y Sampling

One 7S11 inserted in the RIGHT VERT compartment and one in the HORIZ compartment automatically share a 50 kilohertz free-running strobe condition specified for X-Y displays. The 7S14 has an X-Y operation incorporated as one of its normal mode functions.

## SPECIAL PURPOSE PLUG-IN UNITS

The variety of special-purpose plug-in units available allows the R7103 Oscilloscope to be used for many special applications. The following is a brief discussion of some of the available special-purpose plug-in units.

### Digital Counters and Multimeter Plug-In Units

Digital-multimeter plug-in units measure current, voltage, temperature and resistance; digital-frequency counter plug-in units measure frequency, from dc to above 500 megahertz. These units make use of the readout system to display the measured information on the crt and can function in any compartment, in combination with each other or with any other plug-in units available for use with the R7103 oscilloscope system.

The ability of digital readout plug-in units to operate with other plug-in units makes it possible to process and monitor signals while the digital measurement is being made. For example, by installing a frequency counter in one vertical compartment and an amplifier in the other vertical compartment, the crt can display the trigger waveform, superimposed on the displayed signal, to show the actual triggering point. Or, if the counter is placed in the horizontal compartment, a low-amplitude signal can be applied to a vertical amplifier and amplified before it is internally routed by the trigger source switches to the counter trigger circuit. This allows the counnter to monitor signals too small to trigger other counters.

### Transistor Curve-Tracer Plug-In Units

The 7000-series transistor curve-tracer plug-in unit checks small-signal transistors and diodes by producing a display showing the basic characteristic curves for the device being tested. Stepped sweep signals from an internal power supply are applied to the device under test. The resulting output signals are, in turn, applied to the horizontal and vertical deflection systems of the oscilloscope to plot a family of characteristic curves. This plot can be used to check for damaged transistors and diodes, or to select for special or matched characteristics and to calculate gain, leakage, breakdown voltage, etc.

### Spectrum Analyzer Plug-In Units

The 7000-series spectrum analyzer plug-in units display signal amplitudes dispersed over portions of the rf spectrum. Absolute signal energy is plotted on the vertical axis against frequency on the horizontal axis. Applications include waveform and distortion analysis, EMC and random noise measurements, filter design, spectrum surveillance, etc.

## X-Y OPERATION

In some applications, it is desirable to display one signal versus another (X-Y) rather than against time (interval sweep). The flexibility of the amplifier plug-in units available for use with the R7103 provide the means of applying external signals to the horizontal-deflection system.

## RASTER DISPLAYS

A raster-type display can be used to increase the apparent sweep length. For this type of display, the trace is deflected both vertically and horizontally by sawtooth signals. This is accomplished in the R7103 by installing a 7B-series time base in one vertical plug-in compartment. Normally, the time base in the vertical compartment should be set at a slower sweep rate than the time base in the horizontal compartment; the number of horizontal traces in the raster depends upon the ratio between the two rates.

Information can be displayed on the raster using several different methods. In the ADD position of the VERTICAL MODE selector, the signal from an amplifier can be algebraically added to the vertical waveform. With this method, the vertical signal amplitude on the crt should not exceed the distance between the horizontal lines of the raster. Another method of displaying information on the raster is to use the Z-AXIS INPUT to provide intensity modulation for the display. This type of raster display could be used to provide a television-type display. Complete information on operation using the Z-axis feature is given under Intensity Modulation.

To provide a stable raster display, both time bases must be correctly triggered. Internal triggering is not provided for the time bases when they are in the vertical compartments; external triggering must be used. Also, blanking is not provided from the time bases when they are installed in a vertical compartment.



http://manoman.sqhill.com

## WARNING

THE FOLLOWING SERVICING INSTRUCTIONS ARE FOR USE BY QUALIFIED PERSONNEL ONLY. TO AVOID PERSONAL INJURY, DO NOT PERFORM ANY SERVICING OTHER THAN THAT CONTAINED IN OPERATING INSTRUCTIONS UNLESS YOU ARE QUALIFIED TO DO SO. REFER TO OPERATORS SAFETY SUMMARY AND SERVICE SAFETY SUMMARY PRIOR TO PERFORMING ANY SERVICE.

http://manoman.sqhill.com

# SERVICING SAFETY SUMMARY

## FOR QUALIFIED SERVICE PERSONNEL ONLY

*Refer also to the preceding Operators Safety Summary*

### DO NOT SERVICE ALONE

Do not perform internal service or adjustment of this product unless another person capable of rendering first aid and resuscitation is present.

### USE CARE WHEN SERVICING WITH POWER ON

Dangerous voltages exist at several points in this product. To avoid personal injury, do not touch exposed connections and components while power is on.

Disconnect power before removing protective panels, soldering, or replacing parts.

### CRT HANDLING

Use care when handling a crt. Breakage of the crt causes a high-velocity scattering of glass fragments (implosion). Protective clothing and safety glasses should be worn. Avoid striking the crt on anything that might cause it to crack or implode. When storing a crt, put it in a protective carton or set it face down in a protected place on a smooth surface with a soft mat under the faceplate.



http://manoman.sqhill.com

# THEORY OF OPERATION

This section describes the circuitry used in the R7103 Oscilloscope. The description begins with a discussion of the instrument, using the block diagram shown in Figure 3-1, and continues in detail, showing the relationships between the stages in each major circuit. Schematics of all major circuits are given in Section 8, Diagrams and Circuit Board Illustrations. Stages are outlined on the schematics with wide shaded lines. Stage names are in shaded boxes. Refer to these schematics throughout the following circuit description for specific electrical values and relationships.

## BLOCK DIAGRAM

The following discussion is provided to assist in understanding the overall concept of the R7103 Oscilloscope mainframe before the individual circuits are discussed in detail. Figure 3-1 is a basic block diagram of the R7103. Only the basic interconnections between the individual blocks are shown on this diagram. Each major circuit within the instrument is given a block. The number of each block refers to the complete circuit diagram located at the rear of this manual.

### DESCRIPTION

Vertical signals to be displayed on the crt are applied to the Vertical Channel Switch circuit from both vertical plug-in compartments. The VERTICAL MODE switch is connected to the logic circuit and determines whether the signal from the LEFT VERT or RIGHT VERT compartment is displayed on the crt. The Vertical Channel Switch receives an X-Y Inhibit signal from the Readout system to provide the time sharing between the vertical and readout signals.

The selected vertical signal passes through the Delay Line and is amplified by the Vertical Amplifier circuit to drive the vertical deflection plates of the crt (cathode-ray tube). The Vertical Amplifier circuit includes an input from the Readout System to produce the vertical portion of the alphanumeric readout display.

Horizontal signals for display on the crt are connected to the Horizontal Amplifier from the horizontal plug-in compartment. The signal from the HORIZ plug-in compartment passes through the Horizontal Input Stage. The Horizontal Amplifier receives an X-Y Inhibit signal from the Readout System to provide the time sharing between the vertical and readout signals.

The Horizontal Amplifier enlarges the horizontal signal enough to provide full horizontal deflection of the crt. The Horizontal Amplifier circuit accepts an input signal from the Readout System to produce the horizontal portion of the alphanumeric readout display.

The Readout System provides an alphanumeric display of information encoded by the plug-in unit(s). The readout display is written on the crt on a time-shared basis with the analog waveform display. The VERTICAL MODE switch circuits determine which plug-in unit(s) display(s) readout information. The Readout system sends inhibit commands to the Vertical Channel Switch and Z-Axis Logic circuits. The Readout System provides signals to produce the alphanumeric display to the Vertical, Horizontal and Z-Axis Amplifier circuits.

The Logic circuit develops control signals for use in other circuits within the instrument and the plug-in units. These control signals automatically determine the correct instrument operation in relation to the plug-in units, plug-in unit control settings, and R7103 front-panel control settings. The Logic circuit performs three functions. It:

1. Receives
   a. the external Z-Axis Input signal,
   b. the Single Sweep Reset Input from the rear panel, and
   c. the Z-Axis Inhibit Command from the Readout system.
2. Sends the SINGLE SWEEP READY signals to the rear panel.
3. Develops the Z-Axis signal for use by the Z-Axis Amplifier.



http://manoman.sqhill.com

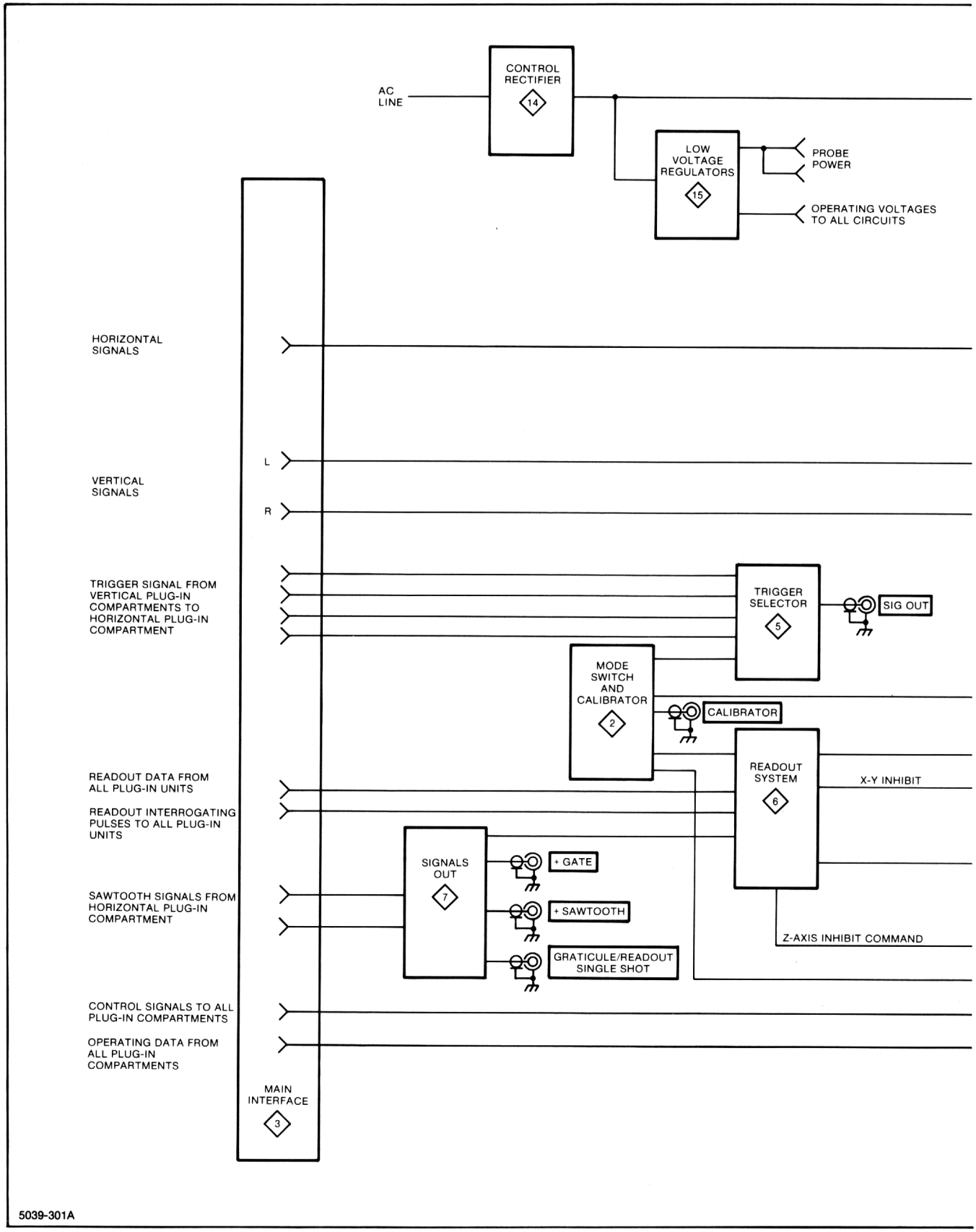


**Figure 3-1. Basic block diagram of the R7103 Oscilloscope.**



http://manoman.sqhill.com

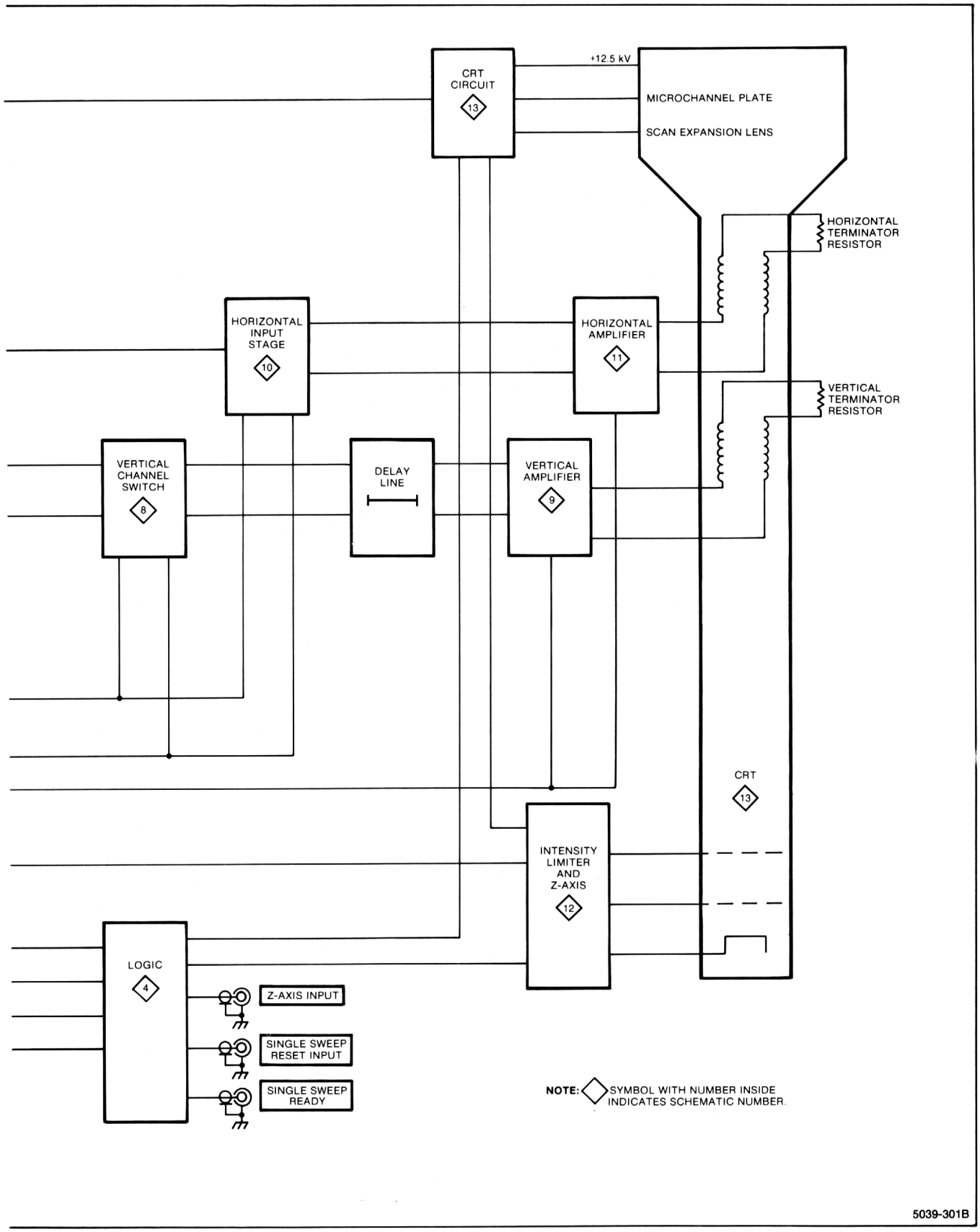


**Figure 3-1 (cont). Basic block diagram of the R7103 Oscilloscope.**



http://manoman.sqhill.com

In addition to control circuitry, the CRT Circuit supplies voltages necessary for operation of the crt by:

- Developing the operating voltages for the crt Microchannel Plate and the Scan Expansion Lens.
- Providing a signal proportional to the average screen current to the input of the intensity limiter level.
- Receiving a signal proportional to the intensity level setting from the logic circuit to be used by the Microchannel Plate supply for biasing. The Z-Axis Amplifier provides the drive signal to control the intensity level of the crt display.

The Calibrator circuit produces a one-kilohertz square-wave signal which can be used to check the calibration of the R7103 and the compensation of probes. The calibrator signal is available as a voltage at the CALIBRATOR connector or as a current through a 40 milliampere optional current loop accessory.

The internal trigger signals from the vertical plug-in units are connected to the Trigger Selector circuit. The Trigger Selector circuit determines whether the trigger signal from the left or right vertical unit is connected to the horizontal plug-in unit. The trigger switch also produces the drive signal that the SIG OUT circuit sends to the output as a sample of the vertical signal.

The Signals Out circuit processes signals from the plug-in units for the front-panel +GATE and +SAWTOOTH outputs.

The Control Rectifier and Low-Voltage Regulator circuits provide the power necessary to operate the instrument. These voltages are connected to all circuits within the instrument.

# DETAILED CIRCUIT OPERATION

A detailed description of the electrical operation and relationship of the circuits in the R7103 Oscilloscope mainframe is provided here. The theory of operation for circuits unique to this instrument is described in detail in the discussion. Circuits commonly used in the electronics industry are not described in detail.

## 1 CABLE DISTRIBUTION

Diagram 1 shows the cable interconnections between circuit boards in the R7103.

## 2 MODE SWITCH AND CALIBRATOR

Diagram 2, in Section 8 (Diagrams and Circuit Board Illustrations) of this manual, is a schematic of the Mode Switch and Calibrator circuitry. Gray shaded lines divide the circuitry into major stages. These stages aid in locating components mentioned here. Subheadings use the stage names to further identify portions of the circuitry on diagram 2.

### CALIBRATOR

The Calibrator circuit provides voltage outputs of 40 millivolts, 0.4 volt and 4 volts at the CALIBRATOR output connector. A current output of 40 millamperes is available from the Calibrator circuit with an optional current-loop adapter. When using the current-loop adapter the Calibrator must be operated only in the 4 V switch position, for stated output.

Transistors Q376 and Q382 form a 1 kilohertz, square-wave oscillator. Oscillation occurs as follows: Initially assume that Q376 is conducting and Q382 is not conducting. The voltage at the emitter of Q382 becomes more negative as C376 discharges through R381. Capacitor C376 discharges until the emitter-base junction of Q382 becomes forward biased. As Q382 begins conducting the oscillator changes states. Regeneration starts when Q382 conducts and C376 stops discharging; this reduces the collector current of Q376. Thus, the collector voltage of Q376 rises positive which causes the base and emitter of Q382 to rise positive. The positive going voltage is coupled by C376 to the emitter of Q376, turning it off.

At this time, Q382 is conducting and Q376 is not conducting. The voltage at the emitter of Q376 goes negative as C376 charges through R376. When the emitter-base junction of Q376 becomes forward biased the oscillator will again change states to complete the cycle.



http://manoman.sqhill.com

**TABLE 3-1**
**Mode Switching Inputs/Outputs**

| FRONT-PANEL SWITCH POSITIONS (INPUTS) | | | | | | | | MODE SWITCHING OUTPUTS | | | | | |
|---|---|---|---|---|---|---|---|---|---|---|---|---|---|
| TRIGGER SOURCE SWITCH | | | VERTICAL MODE SWITCH | | | | | VERT MODE SIG | RIGHT | $\overline{\text{ADD}}$ | TRIGGER SWITCH LIGHTS | | |
| VERT MODE | LEFT VERT | RIGHT VERT | LEFT | ALT | ADD | CHOP | RIGHT | | | | VERT MODE | LEFT VERT | RIGHT VERT |
| | ● | | | | | | | | L | H | | On | |
| | | ● | | | | | | | H | H | | | On |
| ● | | | ● | | | | | L | L | H | On | On | |
| ● | | | | | ● | | | L | L | L | On | On | On |
| ● | | | | | | ● | | Chop | L | H | On | On | |
| ● | | | | | | | ● | H | H | H | On | | On |
| ● | | | | ● | | | | Alt | Alt | H | On | On | On |

The square-wave signal produced at the collector of Q382 switches Q384 on and off. When Q384 is on, the current from R383 and R384 flows to ground. When Q384 is off, this current flows through CR386 and R386 into the voltage divider network of R387, R392, R393, R394, R395, R396, and R397 to produce the 4 volt, 0.4 volt and 40 millivolt Calibrator output voltages. The accuracy of the Calibrator is set by the 0.4 Volts adjustment, R385. Both the 4 V and 0.4 V calibrator switches must be engaged when adjusting R385. The Calibrator frequency is set by the 1 kHz adjustment, R375.

## MODE SWITCHING

The Mode Switching circuit includes front-panel switching and provides the logic for selecting which vertical compartment is to provide deflection for the crt. The Mode Switch circuit operates in conjunction with the Logic circuit (Diagram 4) to develop control signals for use in other circuits in the R7103 and its plug-in units. Table 3-1 shows the outputs produced with all combinations of the front-panel switch positions.




## MAIN INTERFACE

Diagram 3 shows the plug-in interface and the interconnections between the plug-in compartments, circuit boards, etc., of the R7103. The signal and voltage connections of each interface connector are also identified on diagram 3.




## LOGIC

The Logic circuit develops control signals for use in other circuits in the R7103 and any plug-in units installed in the vertical and horizontal compartments. These control signals automatically determine the correct instrument operation in relation to the plug-in units installed or selected, plug-in control settings, and R7103 control settings.

Diagram 4, in Section 8 of this manual, shows the Logic circuit. Gray shaded lines divide the circuitry into major stages. Sub-headings in the following discussion use these stage names to further identify portions of the circuitry on Diagram 4.

**Logic Block Diagram.** Figure 3-2 is a block diagram of the Logic circuit. It shows the sources of the input control signals, the output signals it produces, and the main interconnections between blocks. The interconnections shown are intended only to indicate interrelation between blocks and do not indicate a direct connection or that only a single connection exists between the depicted blocks.



http://manoman.sqhill.com

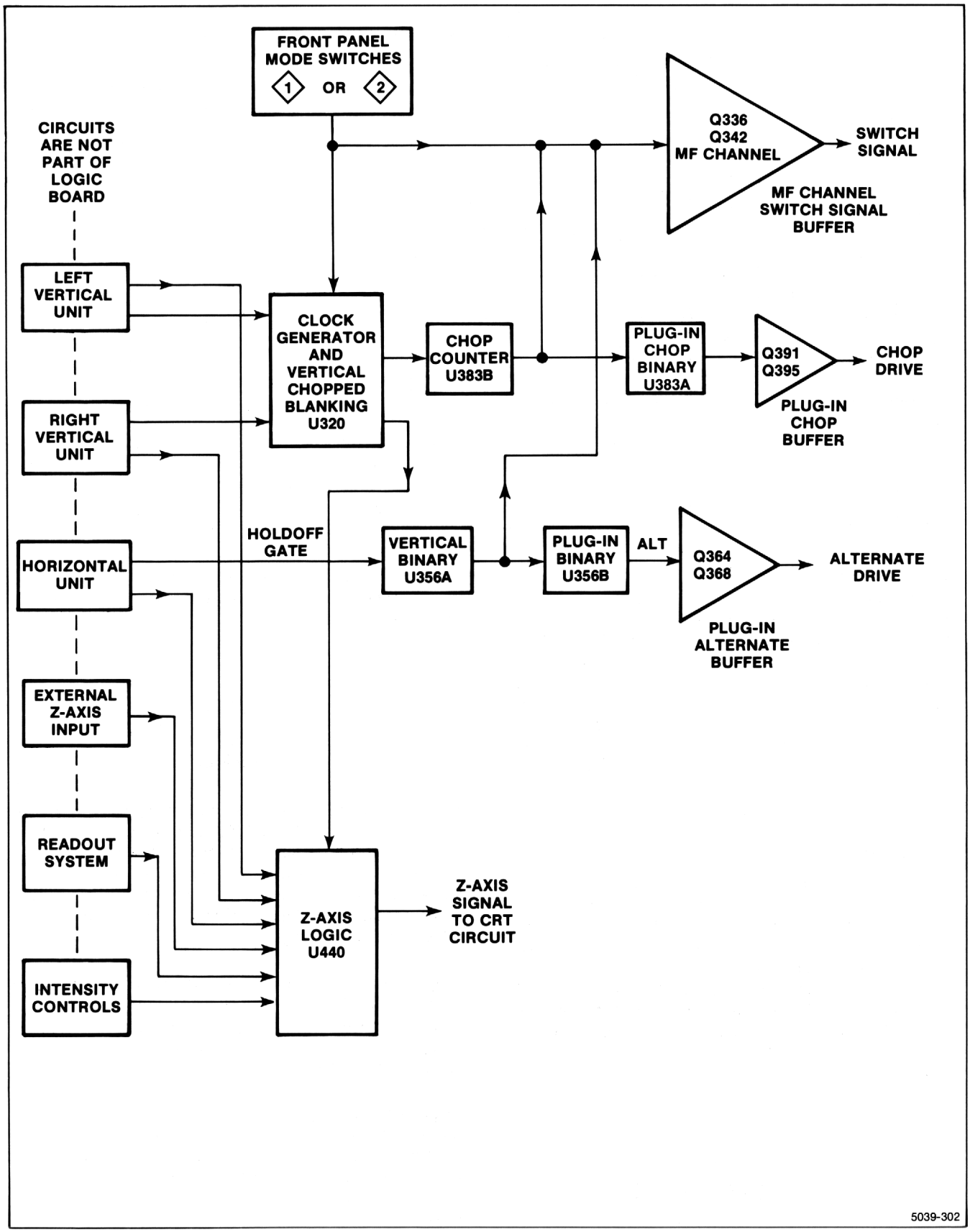


Figure 3-2. Block diagram of Logic circuit.



http://manoman.sqhill.com

The operation of each stage is discussed by relating its input signals or levels to the output, considering the various modes of operation that may affect the stage. A logic diagram is provided where applicable. Logic diagrams are not discussed in detail, but are included to aid in relating the function performed by a given stage to standard logic techniques. These logic diagrams are not exact representations of circuits, but only show the function the stage performs. Where applicable, an input/output table is included for use with this description and the logic diagram. The input/output tables show the combination of input conditions that are important to perform the prescribed function of the stage.

## CLOCK GENERATOR

Half of U320 and associated parts make up the Clock Generator stage. Figure 3-3a is an equivalent circuit of the Clock Generator stage. Resistor R1, Q1, Q2 and Q3 represent the equivalent of the internal workings of U320. This circuit and external parts C314. R312, R313, and R314 comprise a 2-MHz free-running oscillator which provides a clock signal for mainframe vertical and plug-in chopping, and blanking.

The stage operates as follows: Assume that Q2 is conducting and Q1 is turned off. The low collector voltage from Q2 holds Q1 off, and via Q3 reaches pin 14 (see waveforms in Fig. 3-3b at time T0). Because Q1 is not conducting, C314 starts to charge toward −15 V through R312-R313. The emitter of Q1 goes negative as C314 charges until it is about 0.6 V more negative than its base. At that time Q1 starts conducting and its emitter voltage goes positive rapidly. The positive transition from Q1's emitter is coupled directly through C4314 to Q2's emitter, which reverse-biases Q2. When reverse-biased, Q2's collector produces a positive level at pin 14 (see time T1 in Fig. 3-3b).

Conditions are now reversed. Q2 is off and C314 begins to discharge through R314. The emitter voltage of Q2 follows the discharge of C314 until it is about 0.6 V more negative that its base. At that time Q2's collector voltage will go negative and reverse-bias Q1. Transistor Q3 couples the negative voltage from Q2's collector to Q3's emitter, and the cycle is complete. Capacitor C314 again starts to charge toward −15 V through R312-R313 to start the second cycle.

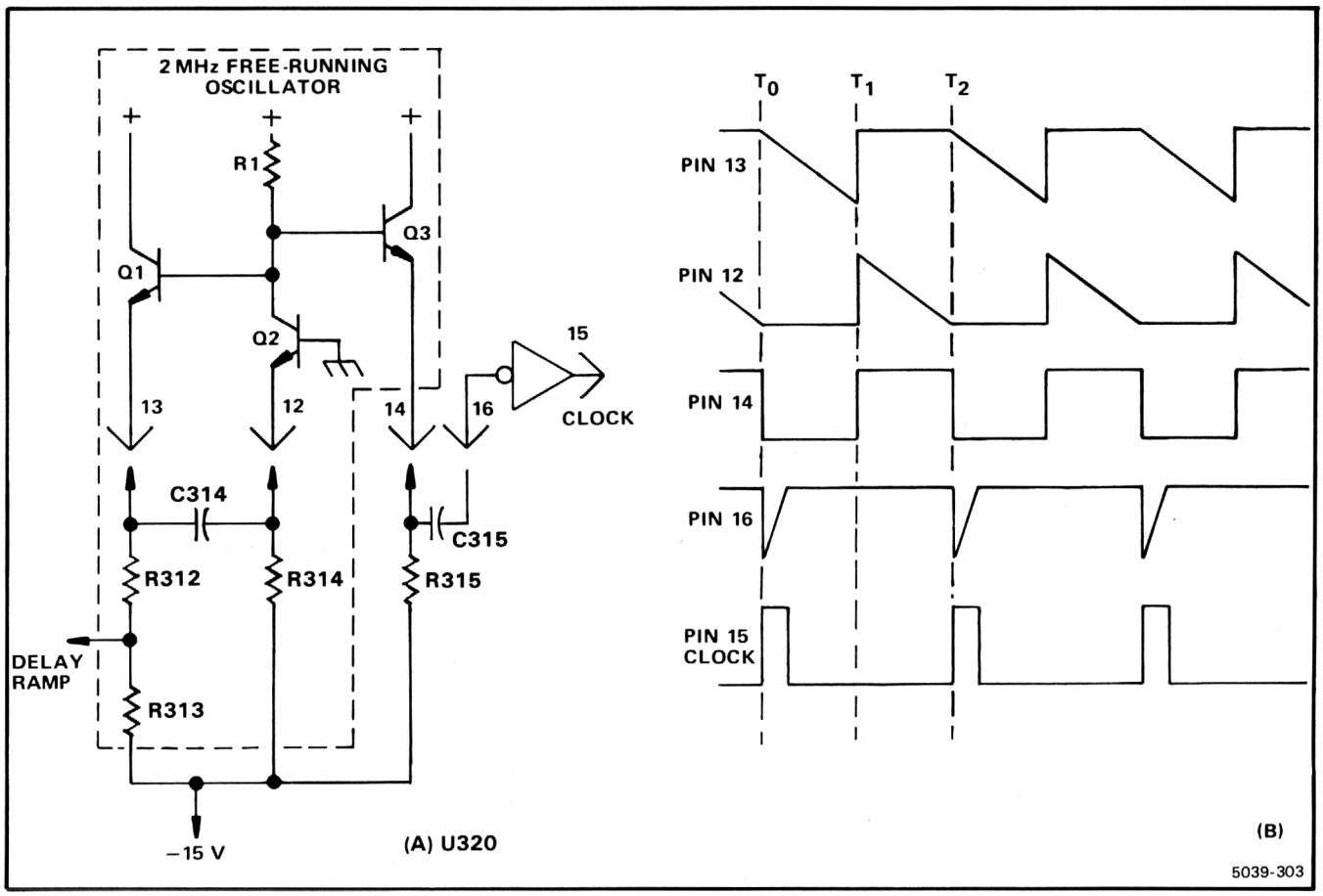


**Figure 3-3. a) Simplified Clock Generator and b) its waveforms.**



http://manoman.sqhill.com

The clock generator produces two outputs. The Delay Ramp signal, from the junction of R312-R313, is connected to the Vertical Chopped Blanking stage. This signal has the same shape as the waveform at pin 13, with its slope determined by the ratio of R312-R313. A square wave is available at U320 pin 14. The frequency of this square wave is determined by the C314 and R1, and the duty cycle is set by the ratio of R312-R313 to R314.

The square wave from U320 pin 14 is connected to pin 16 via C315. Capacitor C315, along with the internal resistance of U320, differentiates the square-wave to form a negative-going pulse coincident with the negative transition of the square wave (the positive-going pulse that coincides with the positive transition of the square wave has no effect on the circuit operation).

## CHOPPED BLANKING

The Chopped Blanking stage consists of the other part of U320; see Figure 3-4a. This stage decides whether Vertical Chopped Blanking pulses are required, based on the operating mode of the vertical system or (if used) dual-trace plug-in units. Vertical Chopped Blanking pulses are produced if:

a. the VERTICAL MODE selector is set to CHOP,

b. a dual-trace vertical unit is operating in chop mode and being displayed, and

c. a dual-trace vertical unit is operating in chop mode with the R7103 VERTICAL MODE selector set to ADD.

The frequency of the Vertical Chopped Blanking pulse output at pin 4 is always 2 MHz, as set by the Clock Generator stage.

The Delay Ramp from the Clock Generator determines the repetition rate and pulse width of the Vertical Chopped Blanking pulses. The Delay Ramp applied to U320 pin 10 starts to go negative from about +1.1 V, coincident with the leading edge of the Clock pulse (see Fig. 3-4b). This results in a high quiescent condition for the Vertical Chopped Blanking line. The slope of the negative-going Delay Ramp is set by the Clock Generator. As it reaches a level just below zero volts, the Vertical Chopped Blanking pulse level changes to the low state, and stays low until the Delay Ramp goes high again. The leading edge of the Vertical Chopped Blanking pulse is delayed from the leading edge of the Clock pulse from U320 (see Fig 3-4b). The amount of delay is determined by the slope of the Delay Ramp applied to U320 pin 10. The delay is necessary due to the delay line in the vertical deflection system. Without delay, the trace blanking resulting from the Vertical Chopped Blanking pulse would not coincide with the switching between display traces. The duty cycle of the square-wave Clock pulse determines the pulse width of the Vertical Chopped Blanking pulses.

Whenever the R7103 is turned on, it produces Vertical Chopped Blanking pulses at a 2 MHz rate. However, U320 produces these pulses (at pin 4) only when its inputs are at specified levels. The following conditions cause Vertical Chopped Blanking pulses to blank the crt during vertical trace switching. Figure 3-4a shows the functions of U320's inputs.

1. Chop Vertical Mode. When the VERTICAL MODE selector is set to CHOP, Vertical Chopped Blanking pulses are available at U320 at all times. The input conditions U320 needs are:

   a. pin 3, high—VERTICAL MODE set to CHOP,

   b. pin 7, low—VERTICAL MODE not set to ADD, and

   c. pin 10, low—Delay Ramp more negative than 0 volts.

2. Left Vertical unit set for Chopped Operation. When the Left vertical unit is set for chopped operation, the setting of the VERTICAL MODE selector determines whether Vertical Chopped Blanking pulses are available. If the VERTICAL MODE selector is set to CHOP, conditions will be as described in No. 1, above. Operation in the ADD mode will be described later. When the R7103 VERTICAL MODE is set to LEFT, or the left vertical unit is set to Alternate mode, Vertical Chopped Blanking pulses are available times at a 2 MHz rate. The input conditions U4320 requires are:

   a. pin 3, low—VERTICAL MODE set anywhere except CHOP,

   b. pin 5, low—left vertical unit set to Chopped mode,

   c. pin 6, low—left vertical unit to be displayed (Vertical Mode Command low),

   d. pin 7, low—VERTICAL MODE set anywhere except ADD, and

   e. pin 10, low—Delay Ramp more negative than 0 volts.

   Note that the Mode command at U320 pin 6 must be low for output pulses to available at pin 4. This means that when the R7103 VERTICAL MODE is set to ALT, Vertical Chopped Blanking pulses are produced only while the left vertical unit is



http://manoman.sqhill.com

displayed (unless the right vertical unit is also set for chopped operation).

3. Right Vertical unit set to Chop. When the right vertical unit is set for chop mode, the operation is the same as when the left vertical is set for chop mode, *except* that Vertical Chopped Blanking pulses will be produced when the R7103 VERTICAL MODE is set to RIGHT or when the Alternate Mode command is high in Alternate mode. The input conditions U320 requires are:

   a. pin 3, low—VERTICAL MODE set anywhere but CHOP,

   b. pin 6, high—right vertical unit to be displayed (Alternate Mode command high),

   c. pin 7, low—VERTICAL MODE set anywhere but ADD,

   d. pin 8, low—right vertical unit set to chop mode, and

   e. pin 10, low—Delay Ramp more negative than 0 volts.

4. Add Vertical Mode. When the R7103 VERTICAL MODE is set to ADD and either vertical unit is operating in chop mode, Vertical Chopped Blanking pulses must be available to blank the transition between traces of the vertical units. The input conditions U320 requires are:

   a. pin 3, low—VERTICAL MODE set anywhere but CHOP,

   b. pin 5, low—left vertical unit set to chop mode (pin 5 can be high if pin 8 is low),

   c. pin 7, high—VERTICAL MODE set to ADD,

   d. pin 8, low—right vertical unit set to chop mode (pin 8 can be high if pin 5 is low), and

   e. pin 10, low—Delay Ramp more negative than 0 volts.

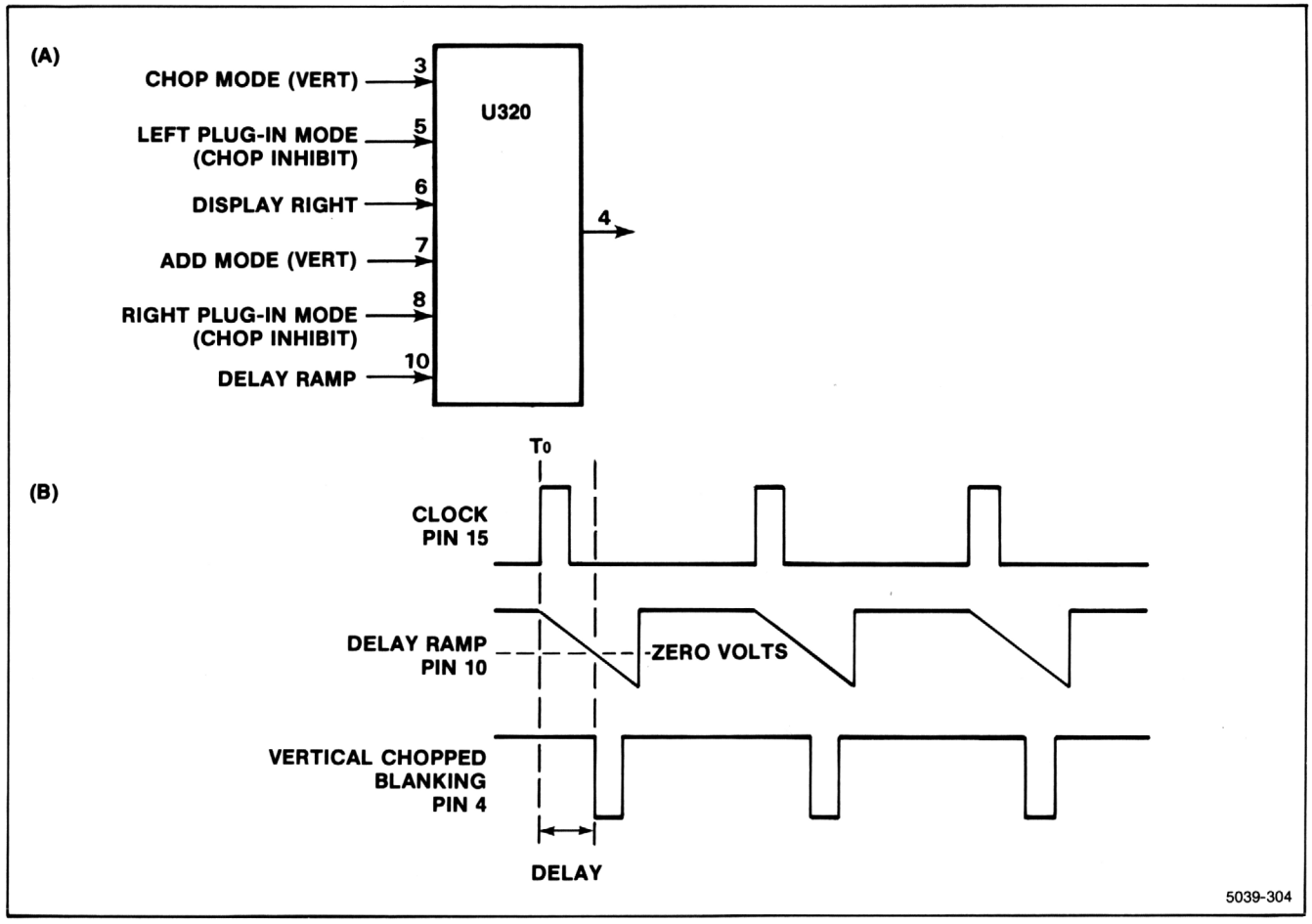


**Figure 3-4. a) Input and output pins of U320, and b) its waveforms.**



http://manoman.sqhill.com

Figure 3-5a is a logic diagram of the Chopped Blanking circuit. The output of the comparator is determined by the relation between its two inputs. If the Delay Ramp is more positive than the grounded input, the output will be high; if the Delay Ramp is more negative, the output will be low. Figure 3-5b is an input/output table for the Chopped Blanking circuit.

## CHOP COUNTER

The Chop Counter produces the Display Right signal and the Chop signal. Clock pulses from U320 provide timing for the Chop counter. Figure 3-6 is a logic diagram of the Chop Counter.

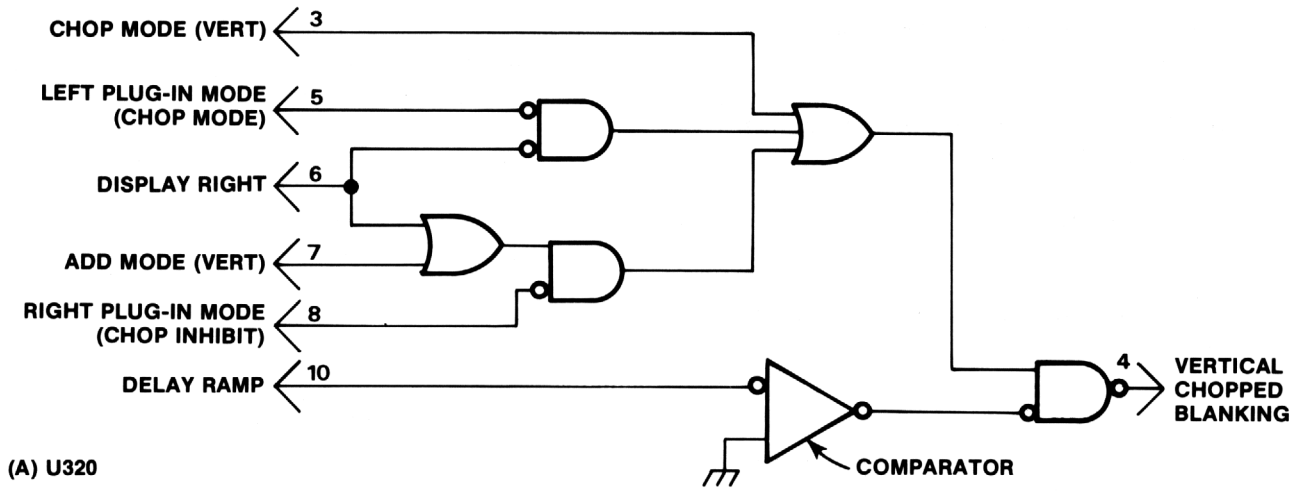


(A) U320

| INPUT | | | | | | OUTPUT | |
|---|---|---|---|---|---|---|---|
| CHOP MODE (VERT) 3 | LEFT PLUG-IN MODE (CHOP INHIBIT) 5 | DISPLAY RIGHT 6 | ADD MODE (VERT) 7 | RIGHT PLUG-IN MODE (CHOP INHIBIT) 8 | DELAY RAMP 10[1] | VERTICAL CHOPPED BLANKING 4[2] | CONDITIONS |
| H | $\phi$ | $\phi$ | L | $\phi$ | L | L | CHOP MODE (VERT) |
| L | L | | L | $\phi$ | L | L | LEFT PLUG-IN CHOPPED |
| L | $\phi$ | H | L | L | L | L | RIGHT PLUG-IN CHOPPED |
| L | L[3] | $\phi$ | H | L[3] | L | L | ADD MODE, LEFT OR RIGHT PLUG-IN CHOPPED |
| ALL OTHER COMBINATIONS | | | | | | H | NO VERTICAL CHOPPED BLANKING PULSES AT OUTPUT |

$\phi$ = HAS NO EFFECT IN THIS CASE

[1] RAMP SIGNAL; CONSIDERED LOW WHEN MORE NEGATIVE THAN ABOUT ZERO VOLTS.

[2] NEGATIVE-GOING PULSE AT TWO MEGAHERTZ RATE.

[3] PIN 5 CAN BE HIGH AND NOT AFFECT OPERATION IF PIN 8 IS LOW; AND VICE VERSA.

(B)

5039-327

Figure 3-5. a) Logic diagram for Vertical Chopped Blanking, and b) its I-O table.



http://manoman.sqhill.com

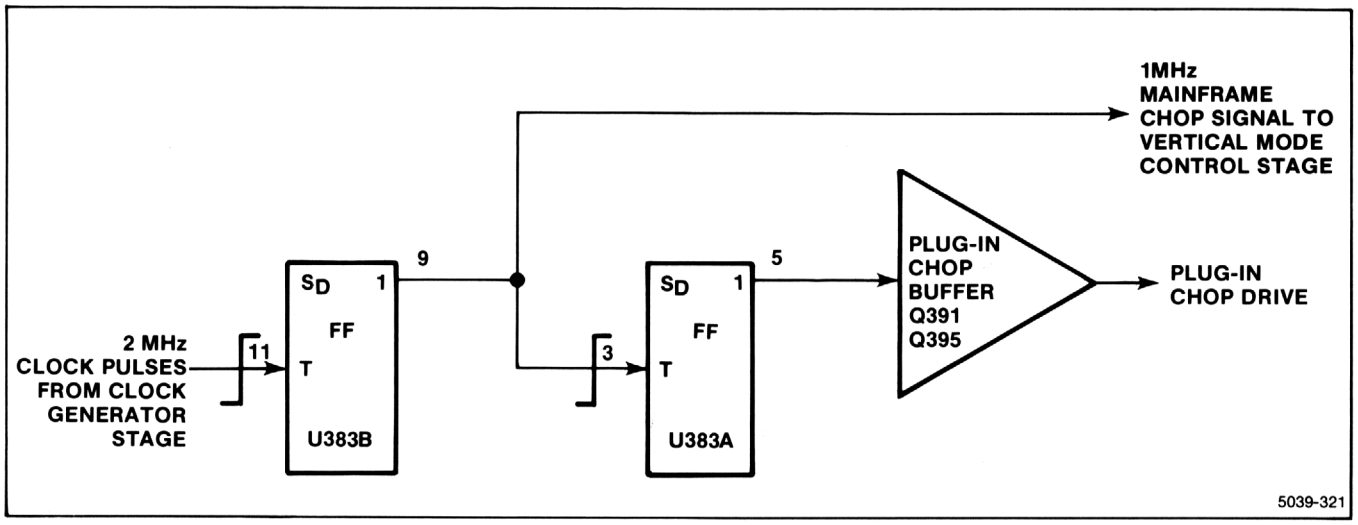


**Figure 3-6. Logic diagram of Chop Counter.**

The Chop Counter consists principally of U383, a dual D (edge triggered) flip-flop. As connected here, U383 operates as a toggled (T) flip-flop.

As shown in Figure 3-6, two-megahertz pulses from U320 stimulate the trigger input of U383B, which changes states on each positive transition at that T input. The signal at U383B's Q output is a one-megahertz square wave, which is connected to the Vertical Mode Control circuit to provide the Display Right signal, and to the T input of U383A. Flip-flop U383A produces a 500 kHz square wave which, via Q391 and Q395, becomes the Chop Drive signal. Figure 3-7 shows the timing relation of the signals in the Chop Counter.

## VERTICAL MODE CONTROL

The Vertical Mode Control circuit consists of CR333, CR332, CR329, CR328, CR327 and buffer amplifier Q336-Q342. These components produce the Display Right signal for the Main Interface circuit (vertical plug-in compartments and trigger-selection circuitry), and the Vertical Interface circuit to indicate which vertical unit is to be displayed. When the Display Right line is high, the right vertical unit is displayed, and when it is low the left vertical is displayed.

The R7103 VERTICAL MODE selector (shown on diagrams 1 and 2) provides a high level on one of its four output lines to indicate the selected vertical mode. The other three lines stay low. The fifth mode, Left, is indicated when all four output lines are low. Operation of the Vertical Mode Control in all positions of the VERT MODE selector is as follows:

### Right

When the VERTICAL MODE selector is set to RIGHT, a high level is connected to Q336 via R327 and CR327. The low level at the anodes of diodes CR328 and CR333 reverse-biases them. The resultant output of Q342 is a high level to indicate that the right vertical unit is to be displayed

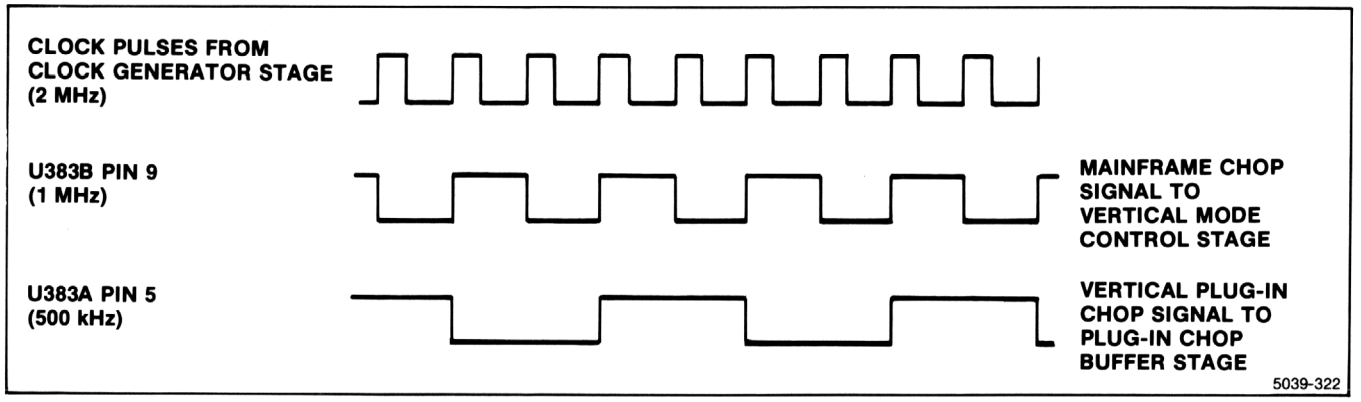


**Figure 3-7. Idealized input and output waveforms for Chop Counter.**



http://manoman.sqhill.com

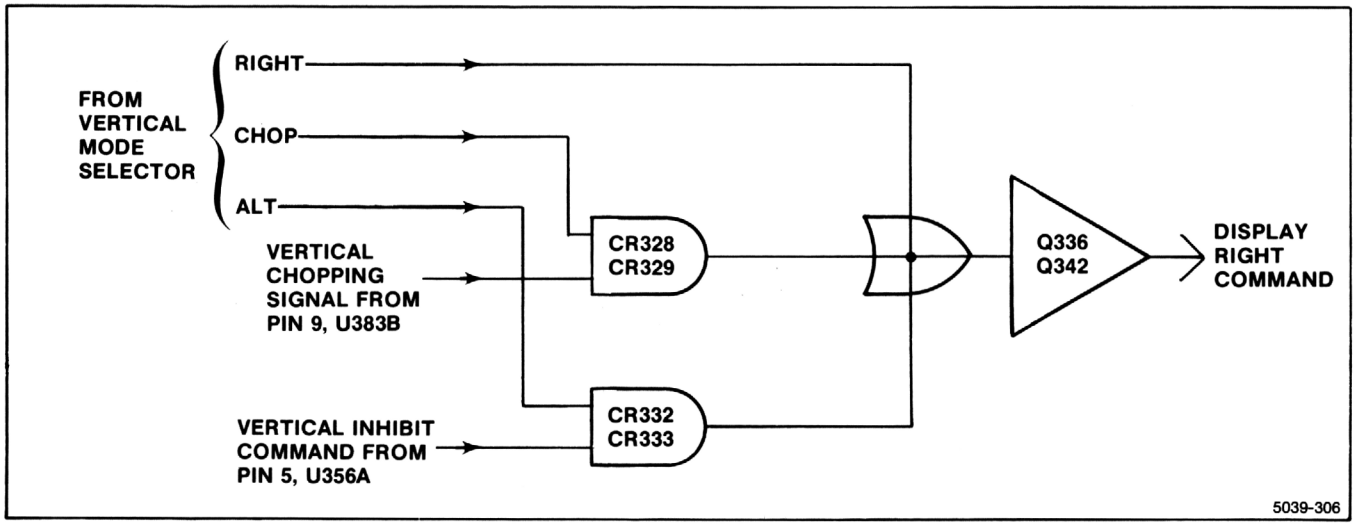


**Figure 3-8. Logic diagram of Vertical Mode Control circuit.**

## Chop

When the VERTICAL MODE selector is set to CHOP, a high level is applied to the anodes of diodes CR329 and CR328 via R328. This forward-biases both diodes so the vertical Chop signal from U383B pin 9 can reach the emitter of Q336. This signal switches at a 1 MHz rate and produces a corresponding Display Right signal at the output of Q342.

## Alternate

When the VERTICAL MODE selector is set to ALT it applies a high level to the anodes of CR333 and CR332 via R332. These diodes are forward-biased, permitting the Display Right command from U356A to reach the emitter of Q336 and determine the Display Right signal. The output of U356B switches at a rate set by the Vertical Binary stage.

## Add and Left

Because there are only three output lines (Right, Chop, and Alternate) from the VERTICAL MODE selector, when it is set to ADD or LEFT those three lines must stay low. Therefore, the emitter of Q336 stays low to produce a low Display Right signal. Final selection of Add or Left mode is made by the Vertical Interface circuit.

Figure 3-8 shows a logic diagram of the Vertical Mode Control circuit.

## VERTICAL BINARY

The Vertical Binary circuit consists of U356A and Q352. Figure 3-9 is a logic diagram of the Vertical Binary circuit.

The operation of the Vertical Binary circuit is controlled by the Alt line from the VERTICAL MODE selector. When it is set to ALT, the VERTICAL MODE selector applies a high level to the emitter of Q352 via R351. This reverse-biases Q352, whose collector stays high. As a result, Q352 has no effect on the operation of the Vertical Binary stage. (The high output of Q352 does not affect U356A.) Therefore, U356A operates as a triggered FF which changes states with each positive transition of the Sweep Holdoff Gate, which occurs at the end of each sweep. The output of U356A switches at half the rate of the Sweep Holdoff Gate from the time base. Figure 3-10 show the time relationships between the input and output signals for this stage, and shows the resultant display for each combination of signals.

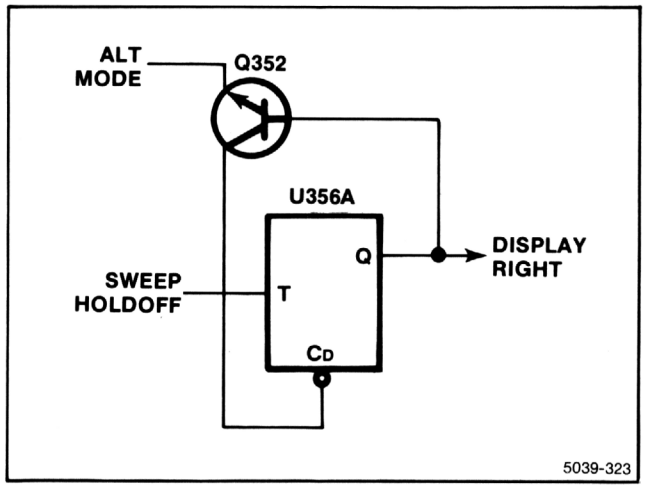


**Figure 3-9. Logic diagram for Vertical Binary circuit.**

When the VERT MODE selector is set to any position other than ALT, the Alt line will be low, enabling Q352. However, Q352 does not turn on unless the Q output of



http://manoman.sqhill.com

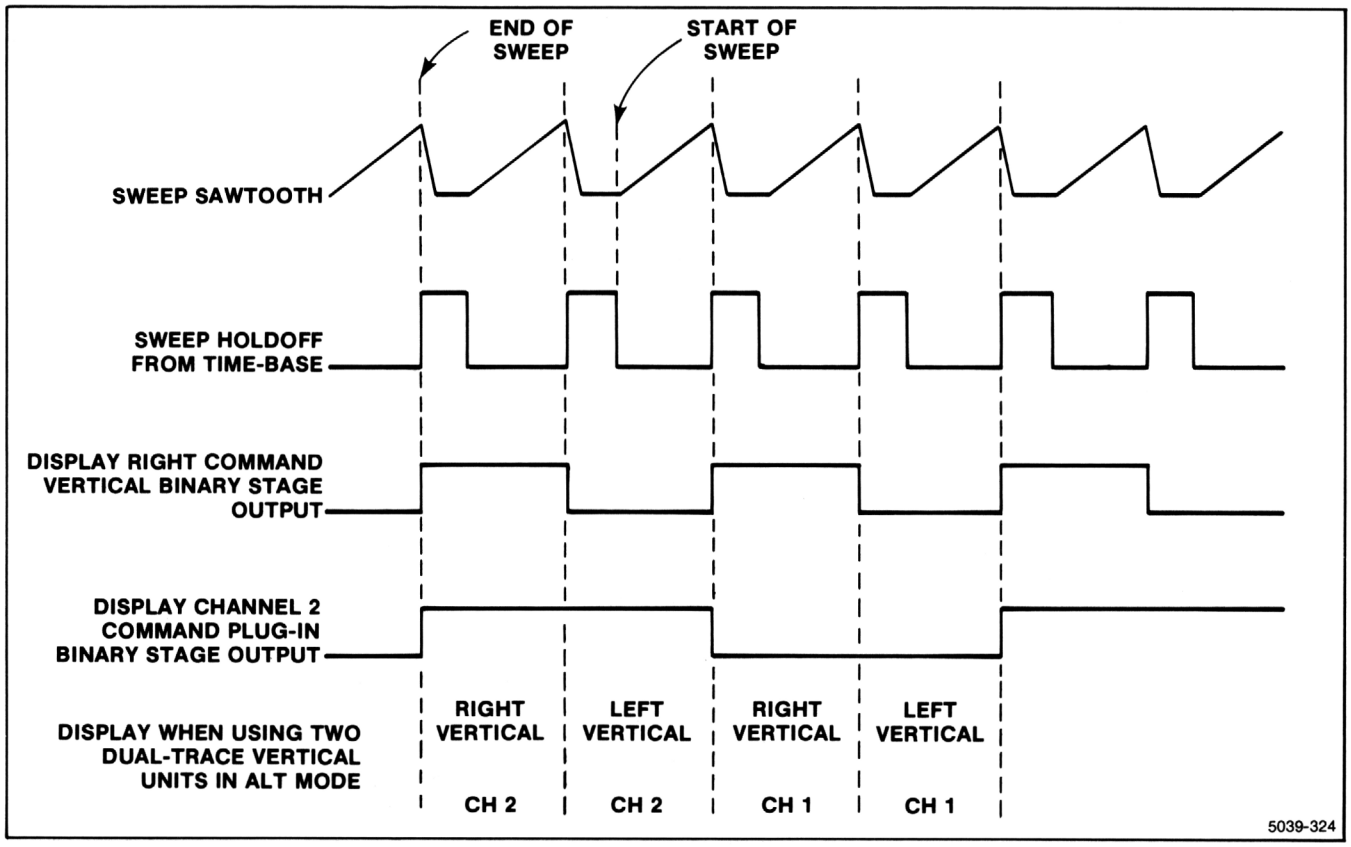


**Figure 3-10. Idealized relation between input and output waveforms of Vertical Binary and Plug-In Binary circuits when R7103 is set to Alternate mode.**

U356A goes high. Quiescently, the output of Q352 is low. Therefore, when a positive Sweep Holdoff Gate triggers U356A at the end of the sweep, the positive output of U356A turns on Q352. Q352's output then goes low and clears U356A, and the output of U356A again disables Q352. The stage is then ready for the next Sweep Holdoff Gate. This action is the same each time, so the signal at the output has the same repetition rate as the Sweep Holdoff Gate. Therefore, this stage is now operating as a divide-by-one counter rather than as the divide-by-two counter described previously. The output in this condition is used only by the Plug-In Binary stage.

Because the Vertical Binary stage can change states only at the end of each sweep, there is no Alternate Drive signal for the mainframe or the vertical plug-in units if no sweep is being produced by the horizontal plug-in unit.

## PLUG-IN BINARY

The Plug-In Binary stage consists of U356B. The trigger input for U356B is the Display Right command from the Vertical Binary stage. When the VERTICAL MODE selector is set to ALT, the repetition rate of the Display Channel 2 Command output of this stage is one-fourth the rate of the Sweep Holdoff Gate (see Fig. 3-10). For any VERTICAL MODE setting other than ALT, the repetition rate of U356B's output will be half the rate of the Sweep Holdoff Gate. Figure 3-11 is a logic diagram of the Plug-In Binary stage.

## CHANNEL SWITCH BUFFER

The Channel Switch buffer receives the output from the Vertical Mode Control circuit, buffers it, and presents it to the other parts of the R7103 on the Display Right line.

Common-base transistor Q336 presents a low impedance to the Vertical Mode Control circuit. Emitter follower Q342 supplies the Display Right signal to the rest of the R7103, and isolates the logic circuits from other circuits in the R7103 and its plug-in units.

## PLUG-IN ALTERNATE BUFFER

The Plug-In Alternate Buffer receives the output of the Plug-In Binary circuit, buffers it, and presents it to the other parts of the R7103 as Alternate Drive.

Like the Channel Switch buffer, the Plug-In Alternate Buffer has a common-base input (Q364) and an emitter-follower output (Q368).



http://manoman.sqhill.com

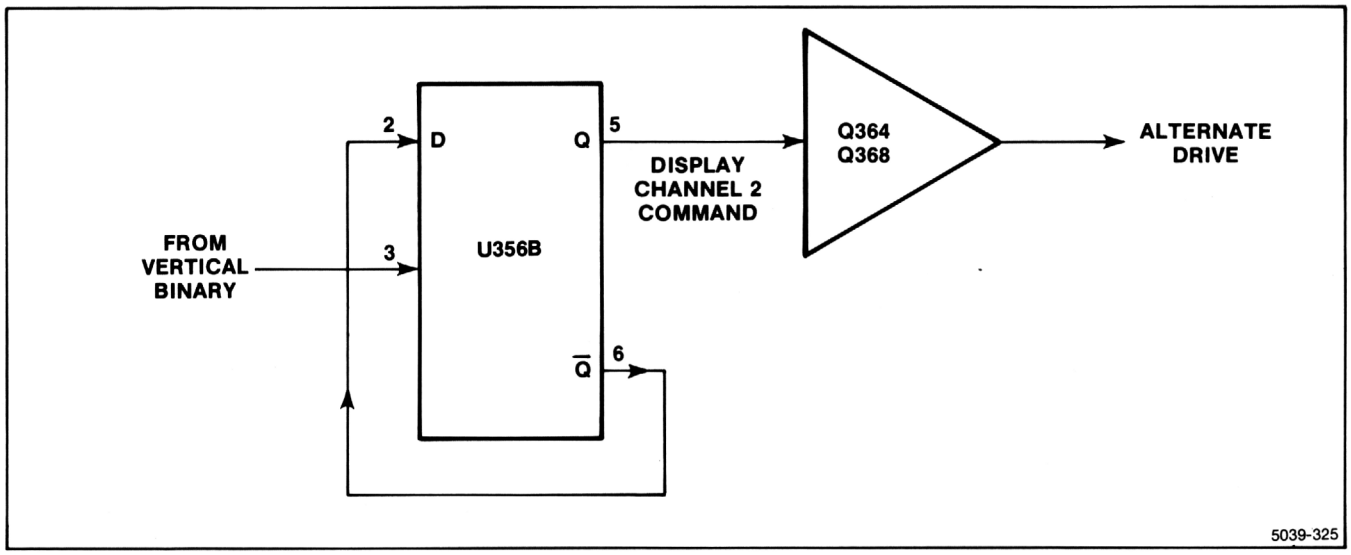


**Figure 3-11. Plug-In Binary stage.**

## PLUG-IN CHOP BUFFER

The Plug-In Chop Buffer receives the output of the Chop Counter and presents it to the other parts of the R7103 as Chop Drive.

Like the Channel Switch Buffer, the Plug-In Chop Buffer has a common-base input (Q391) and an emitter-follower output (Q395).

## Z-AXIS LOGIC

The Z-Axis Logic stage produces an output current signal, at pin 8 of U440, which sets the intensity of the crt display. (The intensity of the readout display is controlled by the Readout System.) The output current at pin 8 is determined by the setting of the INTENSITY control and the Auxiliary Z-Axis input. The Auxiliary Z-Axis input is produced by either the External Z-Axis input or by an input from any of the plug-in units; see Main Interface, diagram 3. The input current from the INTENSITY control is switched, matching the output current to the horizontal display. The Vertical Chopped Blanking and readout blanking signals are applied to this stage to block the output current and thus blank the crt display vertical chopping or during a readout display.

The Z-Axis Logic stage consists of Q416 and U440, which serves as a signal conditiioner for the main Z-Axis Amplifier.

The Sweep Gate signal at pin 14 of U440 provides the unblanking signal for the sweep. The Aux Z-Axis input at U440 pin 9 controls the intensity level, depending on the input signal at the Z-Axis input connector on the rear panel, or the Aux Z-Axis input from the plug-in compartments allows trace intensification. The intensity Limit decreases the Z-Axis output at slow sweep speeds to protect the crt phosphor.

## MCP (MICROCHANNEL PLATE) INTENSITY TRACKING

The MCP output voltage increases as the INTENSITY control is rotated past midrange. Tracking is provided by Q452.

# 5 TRIGGER SELECTOR

The Trigger Selector circuit determines the source of the internal triggering signals connected to the horizontal compartment. Diagram 5, in Section 8 (Diagrams and Circuit Board Illustrations) of this manual, is a schematic of the Trigger Selector circuit. Gray shaded lines divide the circuitry into major stages. Subheadings in the following discussion use these stage names to further identify portions of the circuitry on Diagram 5.

## TRIGGER CHANNEL SWITCH

Amplifier units installed in the vertical compartments provide a differential trigger signal to the mainframe.

Channel switch U232 has two differential inputs and one differential output. Control voltages at pins 1, 2, 11 and 12 determine whether the input signals are terminated within the channel switch or are coupled through to the output. Comparator U252A and Q254 keep the output dc common-mode voltage on pins 3 and 13 at +3.2 volts for



http://manoman.sqhill.com

all modes of channel switch U232. The dc common-mode voltage is sensed by resistors R237 and R247 and is compared with a +3.2 volt reference set by divider R251 and R252. If resistors R237 and R247 sense a voltage higher than +3.2 volts, the output of U252A goes negative lowering the base voltage on Q254. This reduces the current into pin 3A which causes the dc common mode voltage at pin 3 and 13 to decrease. The voltage at pin 3A depends on the channel switch mode. When the VERTICAL MODE selector is set to LEFT, RIGHT, or ALT the voltage on pin 3A is +3.8 volts. When the VERTICAL MODE selector is set to ADD the voltage on pin 3A is +4.6 volts.

Each channel within U232 has an independent pair of control pins for channel selection. If the "On" pin is more positive than the "Off" pins that channel is selected. All of the "On" pins are held at +2.0 volts, the "Off" pins are either at +2.5 volts or at a $T^2L$ LO level. The Trigger Channel Switch has four operating modes: Left, Right, Alt, and Add; in the Left and Right modes the Add logic level is high (on pin CE) and the Right logic level (on pin CD) is low for Left and high for Right. In the ALT mode Add is high and Right alternates between low and high. In the ADD Mode both Add and Right are low. (See the discussion on Mode Switching, Diagram 2, in this section of the Manual).

Zener diodes VR237 and VR247 shift the dc level negative by 9 volts, to set the output of U274 near ground. Diodes VR237 and VR247 are matched to within 100 mV.

### TRIGGER AMPLIFIER

Integrated circuit U274 provides final amplification of the trigger signal. Zener diodes VR237 and VR247 have a 5% voltage tolerance, therefore the dc voltage level at pins 7 and 9 of U274 is −5.8 volt within 0.45 volt. The dc common mode voltage with its 0.45 volt uncertainty is picked off at pin 5 and pin 12 of U274 and applied to the noninverting input of U252B. The output of U252B is 1.2 volts more positive than the input and is used for internal biasing at pin 15 of U274. Variable resistor R274 determines the gain of U274. The overall voltage gain of the trigger selector, from the input connectors J200, J201 or J400 and J401 to the output at J270, J271 into a load of 50 ohms per side, is one. The dc output level of U274 is zero volts, R256 sets the dc centering and R279 adjusts the DC Common Mode voltage.

RC circuit R240 and C240, and C250 provide thermal compensation for U232.

### VERTICAL SIGNAL OUTPUT AMPLIFIER

A differential signal is taken from pins 2 and 4 of U274 and amplified by U492. Before the signal reaches the input of U492 it passes through a compensation circuit consisting of C483, R483, R486, L486, R496, C493 and R493. The characteristic impedance of this circuit is 100 ohms differentially, which terminates the 50-ohm strip transmission lines running from the pickoff points (pins 2 and 4 of U274). At pins 2 and 4 there is an uncertainty in the dc common mode level due to the 5% voltage tolerance of zener diodes VR237 and VR247. Integrated circuit U252B passes on this uncertainty to bias U492. The output signal at J497 is centered at 0 volt by R485. The signal out amplitude is 25 millivolts/division of vertical deflection into a load of 50 ohms, and 0.5 volt/division of vertical deflection into a 1 megohm load. Two time constants, R480-L480, and R490-C490, provide thermal compensation.

## 6
## READOUT SYSTEM

The Readout System provides an alphanumeric display of information encoded by the plug-in units. This display is presented on the crt and is written by the crt beam on a time-shared basis with the analog waveform display.

Diagram 6, in Section 8 (Diagrams and Circuit Board Illustrations) of this manual, shows a schematic diagram of the Readout System. Gray shaded lines divide the schematic into major stages. These stage name headings are used in the following discussion to further identify portions of the circuitry on Diagram 6.

The following terms are used to describe the Readout System:

Character—A single number, letter or symbol displayed on the crt, either alone or in combination with other characters.

Word—A group of related characters. In the Readout System, a word can consist of up to 10 characters.

Frame—A display of all words for a given operating mode and plug-in combination. Up to eight words can be displayed in one frame. Figure 3-12 shows the position of each word in a complete frame.

Column—One of the vertical lines in the Character Selection Matrix (see Fig. 3-13). Columns C-0 (column zero) through C-10 (column 10) can be addressed by the system.

Row—One of the horizontal lines in the Character Selection matrix. Rows R-1 (row 1) through R-10



http://manoman.sqhill.com

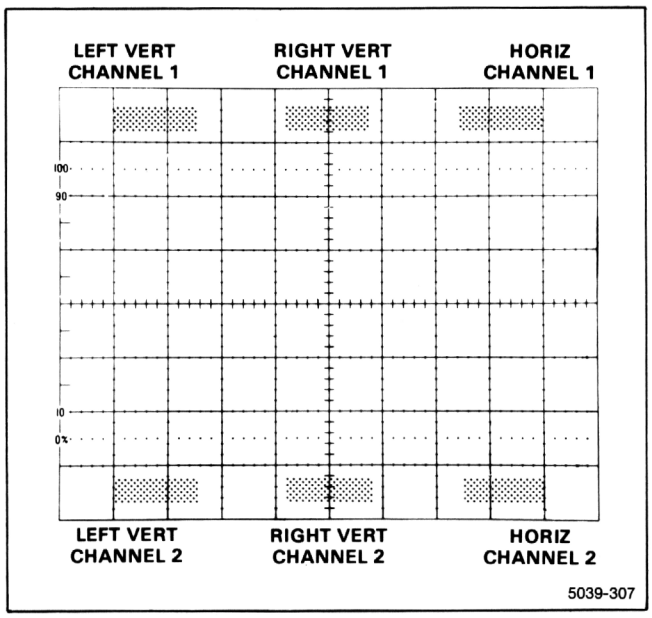


**Figure 3-12. Location of readout display on the crt identifying the originating plug-in and channel.**

(row 10) and R-14 (row 14) can be addressed by the system.

Time-Slot—A location in a pulse train. In the Readout System, the pulse train consists of 10 negative-going pulses. Each time-slot pulse is assigned a number between 1 and 10. For example, the first time-slot is TS-1.

Time-Multiplexing—Transmission of data from two or more sources over a common path by using different time intervals for different signals.

**Display Format.** Up to eight words of readout information can be displayed on the crt. The position of each word is fixed and is directly related to the plug-in unit where it originated. Figure 3-12 shows the area of the graticule where the readout from each plug-in unit is displayed. Notice that Channel 1 of each plug-in unit is displayed in the top division of the crt and Channel 2 is displayed directly below in the bottom division. Figure 3-13 shows a typical display where only Channel 2 of the Right Vertical unit is selected for display.

Each word in the readout display can contain up to 10 characters, although the typical display will contain from two to seven characters per word. The characters are selected from the Character Selection Matrix shown in Figure 3-14. In addition, 12 operational addresses are provided for special instructions to the Readout System. The unused locations in the Matrix (shaded area) are available for future expansion of the Readout System. The method of addressing the locations in the Character Selection Matrix is described in the following discussion.

**Developing The Display.** This description is intended to relate the basic function of each stage to the operation of the overall Readout System. Detailed information on circuit operation is given later.

The key block in the Readout System is the Timer stage (see schematic 6). This stage produces the basic signals that establish the timing sequences within the Readout System. The period of the timing signal is about 250 microseconds (drops to about 210 microseconds when Display-Skip is received; see detailed description of Timer stage further on for more information). This stage also produces control signals for other stages in this circuit and interrupt signals to the Vertical Amplifier, Horizontal Amplifier, and Logic circuits, which allow a readout display to be presented. The Time-Slot Counter stage receives a trapezoidal voltage signal from the Timer stage and directs it to one of 10 output lines. These output lines are labeled TS-1 through TS-10 (time-slots 1 through 10) and are connected to the vertical and horizontal plug-in compartments and to various stages within the Readout System. The output lines are activated sequentially, so there is a pulse on only one of the 10 lines during any 250 microsecond timing period. After the Time-Slot Counter stage has counted time-slot 10, it produces an End-of-Word pulse which advances the system to the next channel.

Two output lines (row and column) are connected from each channel of the plug-in unit back to the Readout System. Data is typically encoded on these output lines by connecting resistors between them and the time-slot input lines. The resultant output is a sequence of 10 analog current levels that range from 0 to 1 millampere (100 microamperes/step) on the row and column output lines. This row and column correspond to the row and column of the Character Selection Matrix in Figure 3-14.

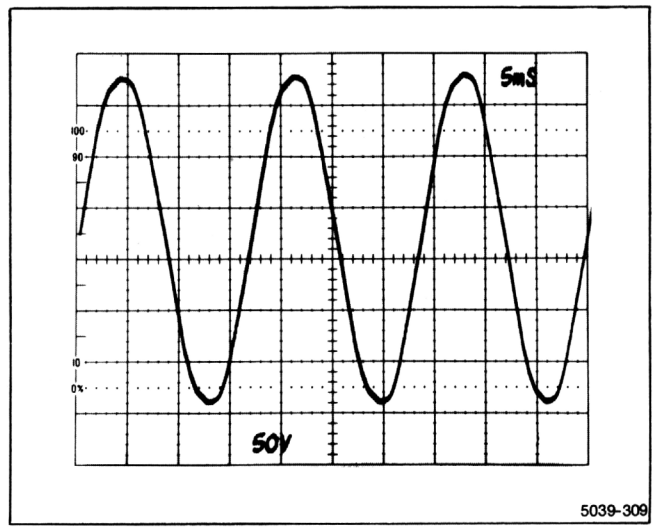


**Figure 3-13. Typical readout display where only channel 2 of the Right Vertical unit is displayed.**



http://manoman.sghill.com

http://manoman.sqhill.com



| ROW NUMBER \ COLUMN NUMBER → | CURRENT (MILLI-AMPERES) | C-0 | C-1 | C-2 | C-3 | C-4 | C-5 | C-6 | C-7 | C-8 | C-9 | C-10 |
|---|---|---|---|---|---|---|---|---|---|---|---|---|
| | | 0 | 0.1 | 0.2 | 0.3 | 0.4 | 0.5 | 0.6 | 0.7 | 0.8 | 0.9 | ⩾ 1.0 |
| R-1 | 0 | SKIP[1] | 0 | 1 | 2 | 3 | 4 | 5 | 6 | 7 | 8 | 9 |
| R-2 | 0.1 | | ↑ | < | I | / | + | − | + | C | Δ | > |
| R-3 | 0.2 | | ADD[1] ONE ZERO | ADD[1] TWO ZEROS | SHIFT[1] PREFIX ← | SHIFT[1] PREFIX ← AND ADD ONE ZERO | | | | | | IDENTIFY[1] |
| R-4 | 0.3 | | m | μ | n | p | X | K | M | G | T | R |
| R-5 | 0.4 | | S | V | A | W | H | d | B | c | Ω | E |
| R-6 | 0.5 | | U | N | L | Z | Y | P | F | J | Q | D |
| R-7 | 0.6 | | | | DECIMAL[1] POINT LOCATION NO. 3 | DECIMAL[1] POINT LOCATION NO. 4 | DECIMAL[1] POINT LOCATION NO. 5 | DECIMAL[1] POINT LOCATION NO. 6 | DECIMAL[1] POINT LOCATION NO. 7 | | | |
| R-8 | 0.7 | | | | | | | | | | DECIMAL POINT | |
| R-9 | 0.8 | | | | | | | | | | | |
| R-10 | 0.9 | ADD SPACE IN DISPLAY[1] | | | | | | | | | | |

UNUSED LOCATIONS. AVAILABLE FOR FUTURE EXPANSION OF READOUT SYSTEM

[1] OPERATIONAL ADDRESS.

5039-308

Figure 3-14. Character selection matrix for R7103 Readout System.

**TABLE 3-2**
**Standard Readout Format**

| Time-Slot Number | Description |
|---|---|
| TS-1 | Determines decimal magnitude (number of zeros displayed or prefix change information) or the IDENTIFY function (no display during this time-slot). |
| TS-2 | Indicates normal or inverted input (no display for normal). |
| TS-3 | Indicates calibrated or uncalibrated condition of plug-in variable control (no display for calibrated condition). |
| TS-4 | 1-2-5 scaling. |
| TS-5<br>TS-6<br>TS-7 | Not encoding by plug-in unit. Left blank to allow addition of zeros by Readout System. |
| TS-8 | Defines the prefix which modifies the units of measurement. |
| TS-9<br>TS-10 | Define the units of measurement of the plug-in unit. May be standard units of measurement (V, A, S, etc.) or special units selected from the Character Selection Matrix. |

The standard format for encoding information onto the output lines is given in Table 3-2. (Special-purpose plug-in units may have their own format for readout; these special formats will be defined in the manuals for these units.)

The encoded column and row data from the plug-in units is selected by the Column Data Switch and Row Data Switch stages respectively. These stages take the analog current from the eight data lines (two channels from each of the four plug-in compartments) and produce a time-multiplexed analog voltage output containing all of the column and row information from the plug-in units. The Column Data Switch and Row Data Switch are sequenced by the binary Channel Address Code from the Channel Counter.

The time-multiplexed output of the Column Data Switch is monitored by the Display-Skip Generator to determine if it represents valid information that should be displayed. Whenever information is not encoded in a time-slot, the Display-Skip Generator produces an output level to prevent the Timer stage from producing the control signals that normally interrupt the crt display and present a character.

The analog outputs of the Column Data Switch and Row Data Switch are connected to the Column Decoder and Row Decoder stages respectively. These stages sense the magnitude of the analog voltage input and produce an output current on one of the ten lines. The outputs of the Column Decoder stage are identified as C-1 through C-10 (column 1 through 10) corresponding to the encoded column information. Likewise, the outputs of the Row Decoder stage are identified as R-1 through R-10 (row 1 through 10) corresponding to the encoded row information. The primary function of the row and column outputs is to select a character from the Character Selection Matrix to be produced by the Character Generator stage. These outputs are also used at other points in the system to indicate when certain information has been encoded. One such stage is the Zeros Logic and Memory. During time-slot 1 (TS-1), this stage checks whether zero-adding or prefix-shifting information has been encoded by the plug-in unit, and stores it in the memory until time-slots TS-5, TS-6, or TS-8. After storing this information, it triggers the Display-Skip Generator stage so that there is no display during TS-1 (as defined by Standard Readout Format; see Table 3-2). When TS-5, TS-6, and TS-8 occur, the memory is addressed and any information stored there during TS-1 is transferred to the input of the Column Decoder stage to modify the analog data during the applicable time-slot.

Also, the Zeros Logic and Memory stage produces the IDENTIFY function. When time-slot 1 is encoded for IDENTIFY (column 10, row 3), this stage produces an output level, which connects the Column Data Switch and Row Data Switch to a coding network within the Readout System. Then, during time-slots TS-2 through TS-9, an analog current output is produced from the Column- and Row Data Switches, which addresses the correct points in the Character Selection Matrix to display the word "IDENTIFY" on the crt. The Zeros Logic and Memory stage is reset after each word by the Word Trigger pulse.

The Character Generator stages produce the characters which are displayed on the crt. Any of the 50 characters shown on the Character Selection Matrix of Figure 3-14 can be addressed by proper selection of the column and row currents. Only one character is addressable in any one time-slot; a space can be added to the displayed word by the Decimal Point Logic and Character Position Counter stage when encoded by the plug-in unit. The latter stage counts the number of characters generated and produces an output current to step the display one character position to the right for each character. In addition, the character position is advanced once during each of time-slots TS-1, TS-2, and TS-3, whether or not a character is generated. This action fixes the starting point of the standard-format display such that the first digit of the scaling factor always starts at the same point in each word regardless of the information encoded in time-slot TS-1, TS-2, or TS-3 preceding this digit. Also,



http://manoman.sqhill.com

by encoding row 10 and column zero during any time-slot, a blank space can be added to the display. Decimal points can be added to the display at any time by addressing the appropriate row and column. (See Character Selection Matrix for location of decimal points.) The Decimal Point Logic and Character Position Counter stage is reset after each word by the Word Trigger pulse.

The Format Generator stage provides the output signals to the vertical and horizontal deflection systems of the instrument to produce the character display. The binary Channel Address Code from the Channel Counter stage is connected to this stage, so that the display from each channel is positioned to the area of the crt associated with the plug-in and channel originating the word (see Fig. 3-12). The positioning current or decimal point location current generated by the Decimal Point Logic and Character Position Counter stage is added to the Horizontal (X) signal at the input to the Format Generator stage to provide horizontal positioning of the characters within each word. The X- and Y-Readout signals are connected to the Horizontal Amplifier and Vertical Amplifier through the X- and Y-Buffer stages.

The Word Trigger stage produces a trigger from the End-of-Word pulse generated by the Time-Slot Counter stage after the tenth time-slot. This Word Trigger pulse advances the Channel Counter to display the information from the next channel or plug-in. It also provides a reset pulse to the Zeros Logic and Memory stage and the Decimal Point Logic and Character Position Counter stage. This Word Trigger stage can also be advanced to jump a complete word or a portion of a word when a Jump Command is received from the Row Data Switch stage.

## TIMER

The Timer stage establishes the timing sequence for all circuits within the Readout System. This stage produces seven time-related output waveforms (see Fig. 3-15). The triangle waveform produced at pin 6 forms the basis for the remaining signals. The basic period of this triangle waveform is about 250 microseconds as controlled by RC network R3434 and C3434. The triangle waveform is clipped and amplified by U3433 to form the trapezoidal output signal at pin 10. The amplitude of this output signal is exactly 15 volts as determined by U3433 (exact amplitude is necessary to accurately encode data in plug-in units; see Encoding the Data). The Trigger output at pin 5 provides the switching signal for the Time-Slot Counter and Word Trigger stages.

The signals at pins 12, 13, 14, and 16 are produced only when the triangle waveform is on its negative slope and the trapezoidal waveform has reached the lower level. The timing sequence of these waveforms is important to the operation of the Readout System (see expanded

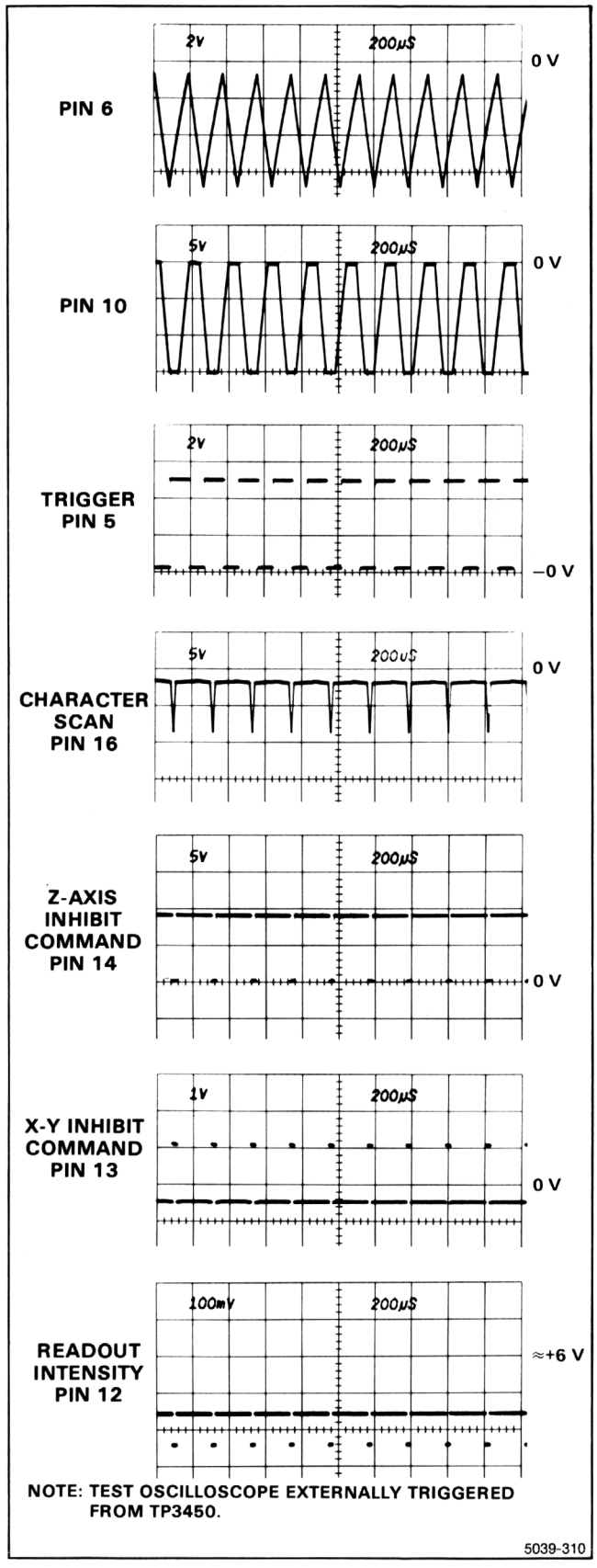


**Figure 3-15. Output waveforms of the Timer stage.**



http://manoman.sqhill.com

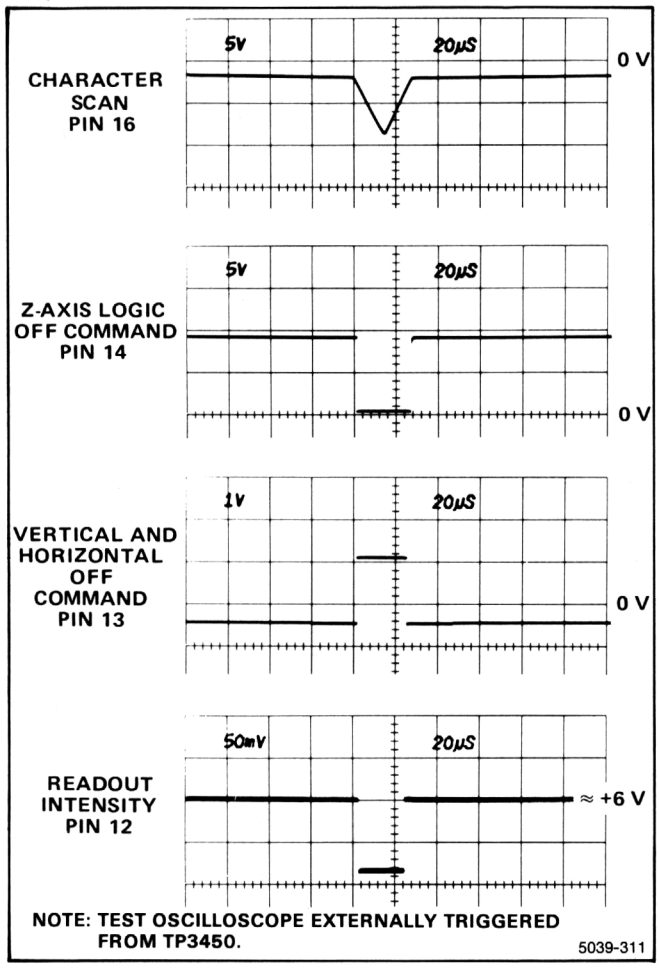


**Figure 3-16. Detail of output at pins 12, 13, 14 and 16 of U3433.**

waveforms in Fig. 3-16). The Z-Axis Inhibit command at pin 14 is produced first. This negative-going signal provides a blanking pulse to the Z-Axis Logic stage (see Diagram 4) to blank the crt before the display is switched to the Readout System. It also produces the strobe pulse through Q3442 and CR3442 to signal other stages within the Readout System to begin the sequence necessary to produce a character. The collector level of Q3442 is also connected, via CR2443, to the symbol Character Generator U3463. This activates U3463 during the quiescent period of the strobe pulse (collector of Q3442 negative) and diverts the output current of Row Decoder U3429 to row 2. The purpose of this configuration is to prevent the Zeros Logic and Memory stage U3401 from storing incorrect data during the quiescent period of the strobe pulse. When the strobe pulse goes positive, CR3443 is reverse biased to disconnect Q3442 from U3463 and allow the Row Decoder to operate in the normal manner. Figure 3-16 shows greater detail of the outputs of Timer U3433.

The next signal U3433 produces is the X-Y Inhibit command at pin 13. This positive-going signal disconnects the plug-in signals from the vertical and horizontal deflection systems. The Ready signal derived from this output is connected to the Decimal Point Logic and Character Position Counter stage and the Format Generator stage.

The Z Readout output at pin 12 is produced next. This current is connected to the crt circuit to unblank the crt to the intensity level determined by the voltage on the Gate Readout Intensity line. The Character Scan ramp at pin 16 started to go negative as this timing sequence began. However, character generation does not start until the readout intensity level has been established. The triangular Character Scan ramp runs from about -2 volts to about -8.5 volts, then returns back to the original level. This waveform provides the scanning signal for the Character Generator stages. Character Scan adjustment R3437 sets the dc level of the Character Scan ramp for complete characters on the display.

The Timer stage operates in one of two modes as controlled by the Display-Skip level at pin 4. The basic mode just described is a condition that occurs only when all ten characters of each word (80 characters total) are displayed on the crt. Under typical conditions, only a few characters are displayed in each word. The Display-Skip level at pin 4 determines the period of the Timer output signal. When a character is to be generated, pin 4 is low and the circuit operates as just described. However, when no character is to be displayed, a high level is applied to pin 4 of U3433 through CR3432 from the Display-Skip Generator stage. This signal causes the Timer to shorten its period of operation to about 210 microseconds. The waveforms in Figure 3-17 show the operation of the Timer stage when the Display-Skip condition occurs for all positions in a word. Notice that there is no output at pins 12, 13, 14, and 16 in this condition. This means that the crt display is not interrupted to display characters. Also notice that the triangle waveform at pin 6 does not go as far negative, and that the negative portion of the trapezoidal waveform at pin 10 is shorter. Complete details on operation of the Display-Skip Generator are given later.

The Timer operation is also controlled by the Single-Shot Lockout level at U3433 pin 2. If this level is low, the Timer operates as just described. However, if the Single-Shot Lockout stage sets a high level at this pin, the Timer stage is locked out and cannot produce any output signals (see Single-Shot Lockout description for further information).

A negative voltage on the Readout Intensity line sets the intensity of the readout display independently of the INTENSITY control. The Readout Intensity line also provides a means of turning the Readout System off when a readout display is not desired. When the Readout Intensity line is left open, the current from pin 11 of U3433 is interrupted, and at the same time, a



http://manoman.sqhill.com

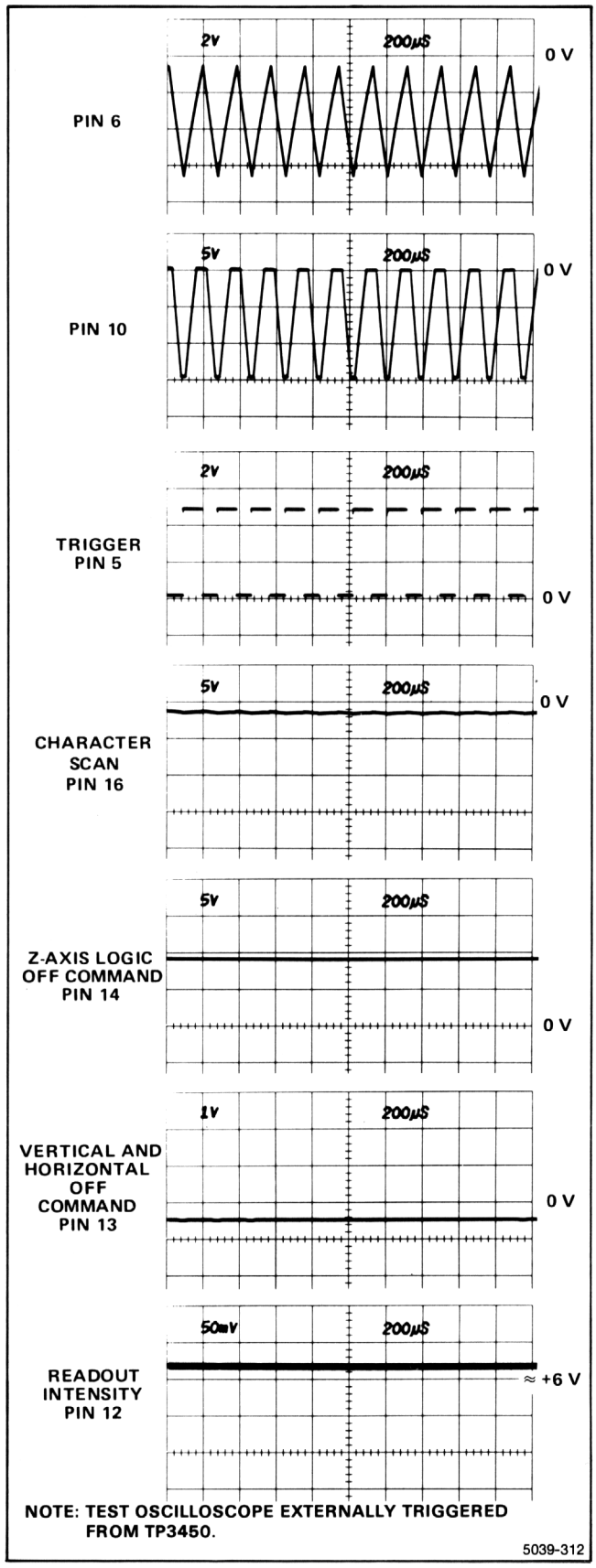


**Figure 3-17. Timer stage operation when display-skip condition occurs.**

positive voltage is applied to pin 4 through CR3431. The positive voltage switches the stage to the same conditions as were present under the Display-Skip condition. Therefore, the crt display is not interrupted to present characters. However, time-slot pulses continue to be generated.

## TIME-SLOT COUNTER

Time-Slot Counter U3445 is a sequential switch which directs the trapezoidal waveform input at pin 8 to one of its 10 output lines. These time-slot pulses are used to interrogate the plug-in units to obtain data for the Readout System. The trigger pulse at pin 15 switches the Time-Slot Counter to the next output line; the output signal is sequenced consecutively from time-slot 1 through time-slot 10. Figure 3-18 shows the time relationship of the time-slot pulses. Notice that only one line carries a time-slot pulse at any given time. When time-slot 10 is completed, a negative-going end-of-word pulse is produced at pin 2. The end-of-word pulse provides a drive pulse for the Word Trigger stage and also provides an enabling level to the Display-Skip Generator during time-slot 1 only.

Pin 16 is a reset input for the Time-Slot Counter. When this pin is held low, the Time-Slot Counter resets to time-slot 1. The Time-Slot Counter can be reset in this manner only when a Jump-Command is received by U3447B and A (see following discussion).

## WORD TRIGGER

The Word Trigger stage consists of U3447C and D. Quiescently, pin 8 of U3447C is low as established by the operating conditions of U3447B and A. Therefore, the low end-of-word pulse produced by the Time-Slot Counter results in a high level at pin 10 of U3447C. U3447D inverts this level to provide a negative-going Word Trigger pulse to the Channel Counter.

Aso, U3447D produces a Word Trigger pulse when U3447B pin 6 receives a Jump Command. This condition can occur during any time-slot (see Row Decoder for further information on origin of the Jump Command). Integrated circuit U3447B and A are connected as a bistable flip-flop. The positive-going Jump Command at U3447B pin 6 produces a low at U3447B pin 4. Inverter U3447A inverts the low from U3447B to produce a high at pin 1, which via CR3447, allows pin 6 of U3447B to be pulled high. The flip-flop has now been set and remains in this condition until reset, even though the Jump Command at pin 5 returns to its low level. The high output level at pin 1 turns on Q3445 to pull pin 16 of the Time-Slot Counter low. This resets the Time-Slot Counter to time-slot 1 and holds it there until the Word Trigger is reset. At the same time, a high level is applied to pin 4 of the Timer through CR3445 and CR3432. This high level causes the Timer to operate in the Display-Skip mode, so no character is generated.



http://manoman.sqhill.com

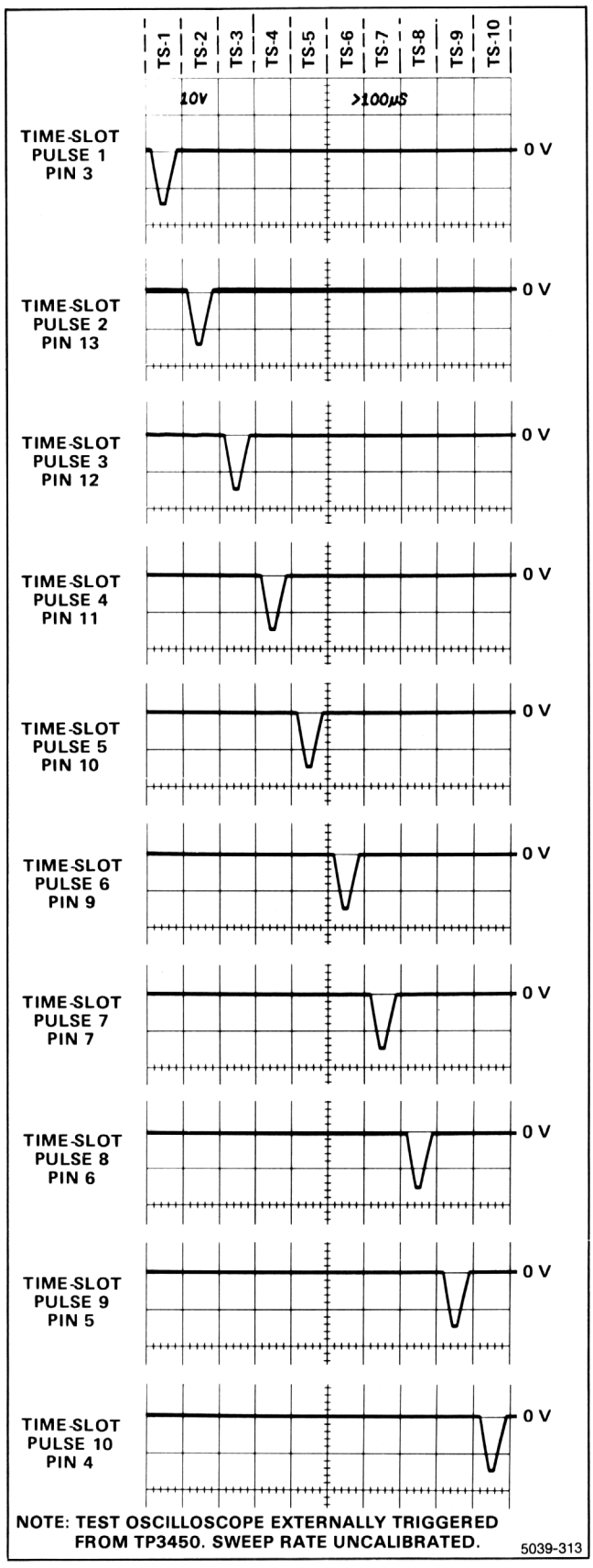


**Figure 3-18. Time relationship of the time-slot (TS) pulses produced by Q2159.**

Because U3445 is locked in time-slot 1 by U3447, the Time-Slot Counter does not recognize the next Trigger pulse. However, this Trigger pulse resets the Word Trigger stage through C3445. Pin 1 of U3447A goes low to enable the Time-Slot Counter and Timer stages for the next time-slot pulse. Simultaneously, when U3447A switches output states, the resulting negative-going edge is connected to pin 8 of U3447C. This results in a negative-going Word Trigger output at pin 13 of U3447D to advance the Channel Counter to the next word. When the next Trigger pulse is received at pin 15 of U3445, the Time-Slot Counter returns to the normal sequence of operation and produces an output on the time-slot 1 line.

## CHANNEL COUNTER

Channel Counter U3450 is a binary counter that produces the Channel Address Code for the Column and Row Decoder stages and the Format Generator stage. This code instructs these stages to sequentially select and display the six channels of data from the plug-in units. Table 3-3 gives the six combinations of the Channel Address Code and the resultant channel selected with each combination.

**TABLE 3-3**
**Channel Address Code**

| Level on U3450 | | | Channel Displayed |
|---|---|---|---|
| Pin 11 | Pin 8 | Pin 9 | |
| High | High | High | Channel 1 Left Vertical |
| High | High | Low | Channel 2 Left Vertical |
| High | Low | High | Channel 1 Right Vertical |
| High | Low | Low | Channel 2 Right Vertical |
| Low | High | High | Channel 1 Horizontal |
| Low | High | Low | Chanenl 2 Horizontal |

## SINGLE-SHOT LOCKOUT

The Single-Shot Lockout stage allows a single readout frame (six complete words) to be displayed on the crt, after which the Readout System is locked out, so further readout displays are not presented until the circuit is reset. Integrated circuit U3449C and U3449D are connected to form a bistable flip-flop. For free-run operation, pin 8 of U3449C is held high. This activates U3449C and results in a low output level at pin 10, enabling the Timer stage to operate in a free-running manner.

The output of the Single-Shot Lockout stage remains low to allow U3433 to operate in the free-running mode



http://manoman.sqhill.com

until a low is received at pin 8 of U3449C. When this occurs, the output level at pin 10 of U3449C does not change immediately. However, the Readout System is now enabled as far as the single-shot lockout function is concerned. If the Channel Counter has not completed word 8, the Readout System continues to operate in the normal manner. However, when word 8 is completed, the negative-going end-of-frame pulse is produced at pin 11 of U3450 as the Channel Counter shifts to the code necessary to display word one. The end-of-frame pulse disables U3449B and U3449A. Gate U3449A is disabled for the time needed for the positive output from U3449B to charge C3449 positive enough to activates U3449D, whose low output disables U3449C (its pin 8 input is already low). The output of U3449C goes high to disable the Timer stage, so it operates in the Display-Skip mode. The high at pin 10 of U3449C also holds U3449D enabled, so it maintains control of the flip-flop.

The Single-Shot Lockout stage remains in this condition until a positive-going trigger pulse is applied to pin 8 of U3449C. This trigger pulse produces a low at pin 10 of U3449C to enable U3433 and disable U3449D. Now, the Timer stage can operate in the normal manner for another complete frame. When word eight is completed, the Channel Counter produces another end-of-frame pulse to lock out the Timer stage.

## ENCODING THE DATA

Data is conveyed from the plug-in units to the Readout System in the form of an analog (current level) code. The characters that can be selected by the encoded data are shown on the Character Selection Matrix (see Fig. 3-

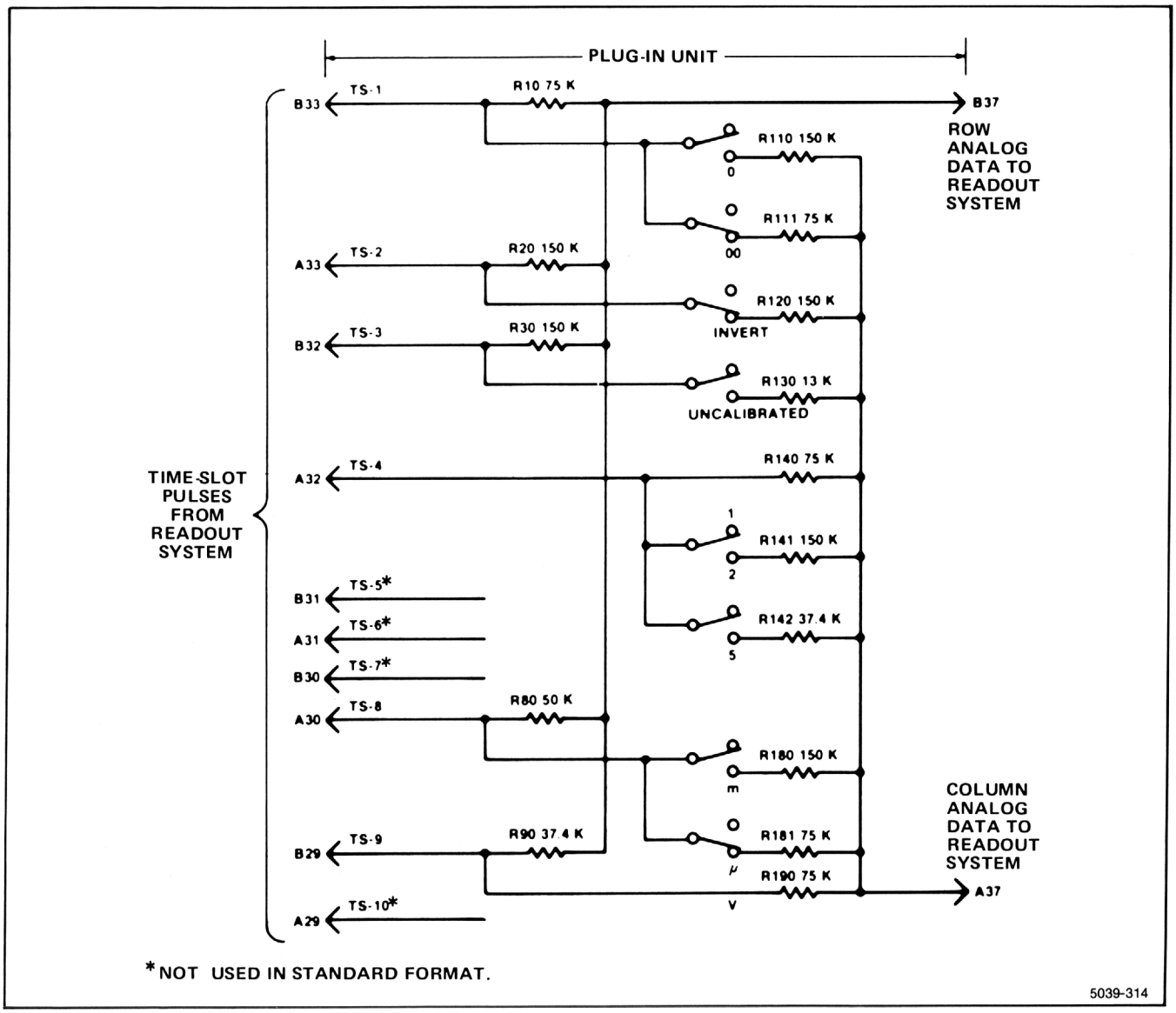


**Figure 3-19. Typical encoding scheme for voltage-sensing plug-in unit. Coding shown for deflection factor of 100 microvolts.**



http://manoman.sqhill.com

14). Each character requires two currents to define it; these currents are identified as the column current and the row current, corresponding to the column and row of the matrix. The column and row data is encoded by the programming the plug-in units. Figure 3-19 shows a typical encoding scheme using resistors for a voltage-sensing amplifier plug-in unit. Notice that the 10 TS (time slot) pulses produced by the Time-Slot Counter stage are connected to the plug-in unit. However, time-slots 5, 6, and 10 are not used by the plug-in unit to encode data when using the Standard Readout Format. (See Table 3-2 for Standard Readout Format.) The amplitude of the time-slot pulse is exactly −15 volts as determined by the Timer stage. Therefore, the resultant output current from the plug-in units can be accurately controlled by the programming resistors in the plug-in units.

For example, in Figure 3-19 resistors R10 through R90 control the row analog data, which is connected back to the Readout System. Figure 3-20 shows an idealized output current waveform of row analog data, which results from the time-slot pulses. Each of the row levels of current shown in these waveforms correspond to 100 microamperes of current. The row numbers on the left-hand side of the waveform correspond to the rows in the Character Selection Matrix (see Fig. 3-14). The row analog data is connected back to the Readout System via terminal B37 of the plug-in interface.

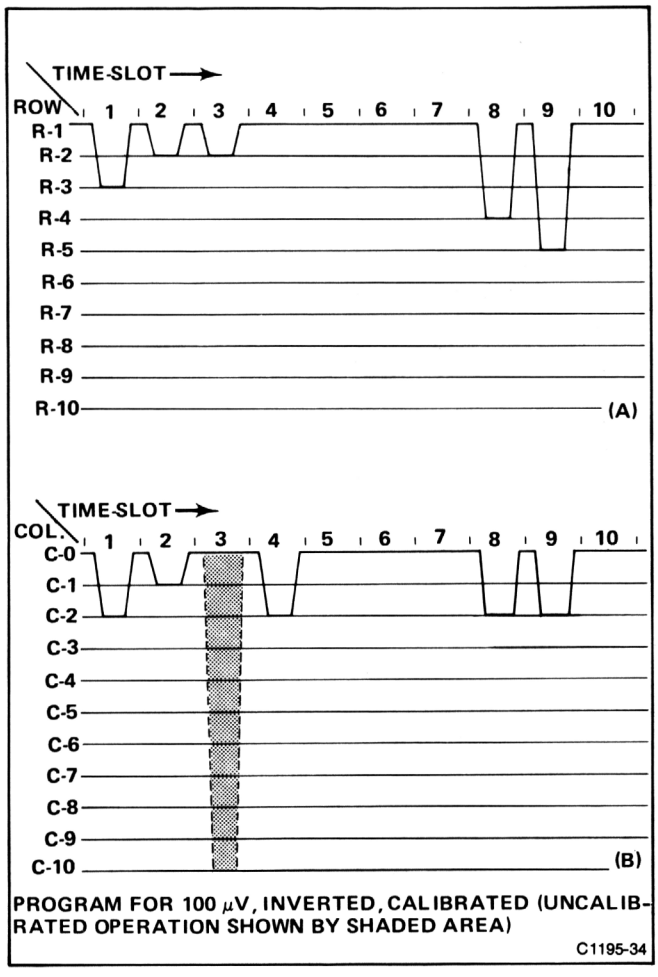


**Figure 3-20. Idealized current waveforms of a) Row analog data and b) Column analog data.**

Resistors R110 through R190 determine the column analog data. The program resistors are connected to the time-slot lines by switch closures to encode the desired data. The data, as encoded by the circuit shown in Figure 3-19, indicates a 100 microvolt sensitivity with the crt display inverted and calibrated deflection factors. This results in the idealized output current waveforms shown in Figure 3-20 at the column analog data output, terminal A37 of the plug-in interface.

Resistor R111, connected between time-slot 1 and the column analog data output, encodes two units of current during time-slot 1. Referring to the Character Selection Matrix, two units of column current, along with the two units of row current encoded by resistor R10 (row 3), indicates that two zeros should be added to the display. Resistor R120 adds one unit of column current during time-slot 2 and, along with the one unit of current from the row output, the Readout System is instructed to add an invert arrow to the display. Resistor R130 is not connected to the time-slot 3 line, because the deflection factor is calibrated. Therefore, there is no display on the crt. (See Display-Skip Generator for further information.)

During time-slot 4, two units of column current are encoded by R140. There is no row current encoded during this time-slot; this results in the numeral 1 being displayed on the crt. Neither row nor column analog data is encoded during time-slots 5, 6, and 7 as defined by the Standard Readout Format. During time-slot 8, two units of column current and three units of row current are encoded by resistors R181 and R80, respectively. This addresses the $\mu$ prefix in the Character Selection Matrix. The final data output is provided from time-slot 9 by R190 connected to the column output and R90 to the row output. These resistors encode two units of column current and four units of row current to cause a V (volts) symbol to be displayed. Time-slot 10 is not encoded, in accordance with the Standard Readout Format. The resultant crt readout will be ↓ 100 $\mu$V.

In the above example, the row analog data was programmed to define which row of the Character Selection Matrix was addressed to obtain information in each time-slot. The column data changes to encode the applicable readout data as the operating conditions change. For example, if the variable control of the plug-in unit was activated, R130 would be connected between time-slot 3 and the column analog data output line. This encodes 10 units of column current (see shaded area in time-slot 3 of the waveform shown in Fig. 3-20). Since one unit of row current is also encoded during this time-



http://manoman.sqhill.com

slot by R30, a > (greater than) symbol is added to the display. The crt readout will now show > 100 μV. In a similar manner, the other switches can change the encoded data for the column output and thereby change the readout display. See the descriptions which follow for decoding this information.

The column analog data encoded by most plug-in units can be modified by attenuator probes connected to the input connectors of amplifier plug-in units. A special coding ring around the input connector of the plug-in unit senses the attenuation ratio of the probe (with readout-encoded probes only). The probe contains a circuit that provides additional column current. For example, if a 10X attenuator probe is connected to a plug-in unit encoded for 100 microvolts as shown in Figure 3-19, an additional unit of current is added to the column analog data during time-slot 1. Since two units of current were encoded by R111, this additional current results in a total of three units of column analog current during this time-slot. Referring to the Character Selection Matrix, three units of column current, along with the two units of row current encoded by R10, indicates that the prefix should be shifted one column to the left. Since this instruction occurs in the same time-slot that previously indicated that two zeros should be added to the display and only one instruction can be encoded during a time-slot, the zeros do not appear in the display. The crt readout will now be changed to 1 mV (readout program produced by plug-in same as for previous example).

Three other lines of information are connected from the plug-in compartments to the Readout System. The column and row analog data from channel 2 of a dual-channel plug-in are connected to the Readout System through terminals A38 and B38 of the plug-in interface, respectively. Force readout information is encoded on terminal A35; the function of this input is described under Column and Row Data Switches. The preceding information gave a typical example of encoding data from an amplifier plug-in unit. Specific encoding data and circuitry is shown in the individual plug-in unit manuals.

## COLUMN AND ROW DATA SWITCHES

The encoding data from the plug-in units is connected to the Column and Row Data Switch stages. A column-data line and a row-data line convey analog data from each of the six data sources (two channels from each of the three plug-in compartments).

The Column Data Switch U262 and the Row Data Switch U232 receive the Channel Address Code from the Channel Counter (refer to Diagram 6 at the rear of this manual). This binary code directs the Column Data Switch and the Row Data Switch as to which channel should be the source of the encoding data. Table 3-3 gives the six combinations of the Channel Address Code and the resultant channel selected with each combination. These stages have nine inputs and provide a time-multiplexed output at pin 7, which includes the information from all of the input channels. Eight of the nine inputs to each stage originate in the plug-in units; the ninth input comes from a special data-encoding network composed of resistors R241 through R248 and R251 through R258. (See Zeros Logic and Memory description for further information on ninth channel.)

In addition to the encoding data inputs from the plug-in units, inputs are provided to the Column Data Switch from the VERTICAL MODE switch to inhibit the readout for any plug-in unit(s) not selected for display. When a unit is not selected, the line corresponding to the opposite channel is high to forward-bias the associated diodes: CR212 and CR213, CR214 and CR215. The forward-biased diodes cause the channel switches to bypass the encoded data from the inhibited channel. However, because it may be desirable to display information from special-purpose plug-in units (even though they do not produce a normal waveform display on the crt), a feature is provided to override the channel inhibit. This is done by applying a low to the associated Force Readout input. The low level diverts the high channel-inhibit current and allows the data from this plug-in unit to reach the Column Data Switch, even though it has not been selected for display by the mode switch.

Row Match adjustment, R3422, sets the gain of the Row Data Switch to match the gain of the Row Decoder for correct output. Column Match adjustment, R3407, performs the same function for the Column Data Switch stage.

## DISPLAY-SKIP GENERATOR

The Display-Skip Generator is made up of Q3406, Q3411, Q3414, and Q3416. This stage monitors the time-multiplexed column data at the output of the Column Data Switch during each time-slot to determine if the information is valid data that should result in a crt display. Quiescently, there is about 100 microamperes of current flowing through R3409 from Q3419 and the Zeros Logic and Memory stage. (The purpose of this quiescent current will be discussed in connection with the Zeros Logic and Memory stage.) This current biases Q3406A so that its base is about 0.2 volt more positive than the base of Q3406B in the absence of column data. Therefore, because Q3406A and B are connected as a comparator, Q3406A will remain on unless its base is pulled more negative than the base of Q3406B.

The analog data output from the Column Data Switch produces a 0.5 volt (approximately) change for each unit of column current that has been encoded by the plug-in unit. Whenever any information appears at the output of the Column Data Switch, the base of Q3406A is pulled more negative than the base of Q3406B, resulting in a



http://manoman.sqhill.com

negative (low) Display-Skip output to the Timer stage through Q3416. Remember that a low was necessary at the skip input of the Timer so it could perform the complete sequence necessary to display a character.

Transistors Q3411 and Q3414 also provide Display-Skip action. The end-of-word level connected to their emitters is low only during time-slot 1. This means they are enabled only during this time-slot. These transistors allow the Zeros Logic and Memory stage to generate a Display-Skip signal during time-slot 1 when information that is not to be displayed on the crt has been stored in memory (further information is given under Zeros Logic and Memory).

## COLUMN AND ROW DECODERS

The Column Decoder U3418 and Row Decoder U3429 sense the magnitude of the analog voltages at their inputs (pin 10) and produce a binary output on one of 10 lines corresponding to the column or row data encoded by the plug-in unit. These outputs provide the Column Digital Data and Row Digital Data, which is used by the Character Generator stages to select the desired character for display on the crt. The column and row data is also used throughout the Readout System to perform other functions.

The input current at pin 9 of U3418, the Column Decoder stage, is steered to only one of the ten Column Digital Data outputs. When a Display-Skip signal is present (collector of Q3416 high), pin 9 is pulled high through CR3416. This ensures that no current is connected to the Character Generator stage under this condition. Notice the corresponding input on the Row Decoder. This input is connected to ground and causes only one of the ten row outputs to saturate to ground.

The network at the input of the Row Decoder, made up of Q3427 and its associated components, is a Row-14 detector that produces the Jump Command. This row current is encoded by special-purpose plug-in units to cause all or part of a word to be jumped. Whenever row 14 (13 units of row current, or 1.3 milliamperes) is encoded, the base of Q2153 is pulled negative enough so that this transistor is reverse-biased to produce a high Jump Command output at its collector. The Jump Command is connected to the Word Trigger stage to advance the Channel Counter to the next word and to reset the Time-Slot Counter to time-slot 1.

## ZEROS LOGIC AND MEMORY

The Zeros Logic and Memory stage U3401 stores data encoded by the plug-in units to provide zeros-adding and prefix-shifting logic for the Readout System. The Strobe pulse at pin 15 goes positive when the data has stabilized and can be inspected. This activates the Zeros Logic and Memory stage so that it can store the encoded data.

Typical output waveforms of the five possible input conditions that can occur are shown in Figure 3-21. When time-slot 1 occurs, a store command is given to all of the memories. If the plug-in units encoded data for column 1, 2, 3, 4, or 10 during time-slot 1, the appropriate memory (or memories) is set. Notice that row 3 information from the Row Decoder must also be present at pin 16 for data to be stored in the memory of U3401.

If data was encoded during time-slot 1, a negative-going output is produced at pin 7 while the memories are being set. This negative-going pulse is connected to the base of Q3414 in the Display-Skip Generator to produce a Display-Skip output. Since the information encoded during time-slot 1 was only provided to set the memories and not intended to be displayed on the crt at this time, the Display-Skip output prevents a readout display during this time-slot.

During time-slot 5, a memory within U3401 is interrogated. If information was stored in this memory, a positive-going output is produced at pin 7. This pulse is connected to pin 10 of the Column Decoder through Q3419 to add one unit of current at the input of the Column Decoder. This produces a zero after the character displayed during time-slot 4. During time-slot 6, another memory within U3401 is interrogated to see if another zero should be added. If another zero is necessary, a second positive output is produced at pin 7, which again results in a column 1 output from the Column Decoder and a second 0 in the crt display.

Finally, another memory within U3401 is interrogated during time-slot 8 to obtain information on whether the prefix should be changed, or left at the value that was encoded. If data has been encoded that calls for a shift in prefix, a negative-going output level is produced at pin 7. This negative level subtracts one unit of column current from the data at the input to the Column Decoder. Notice on the Character Selection Matrix of Figure 3-14 that when row 4 is programmed, a reduction of one column results in a one-column shift of the prefix. For example, with the 100 $\mu$V program shown in Figure 3-19, if the data received from the plug-in unit called for a shift in prefix, the crt readout would be changed to 1 mV (zeros deleted by program; see Encoding the Data).

The 100 microamperes of quiescent current through R3409 provided by Q3419 (see Display-Skip Generator) allows the prefix to be shifted from m (100 microamperes of column current, column 1) to no prefix (0 column current, column 0) so only the unit of measurement encoded during time-slot 9 is displayed. Notice that reducing the prefix program from column 1 to column 0 programs the Readout System to not display a character at this readout location.



http://manoman.sqhill.com

| INPUT PIN OF U2232 ACTIVATED | COMMAND | TIME-SLOTS |
|---|---|---|
| 14 | IDENTIFY | 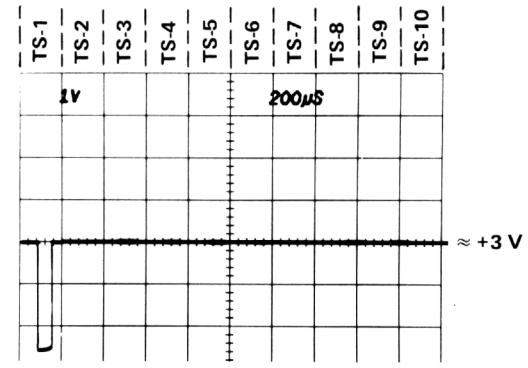 |
| 12 | ADD ONE ZERO | 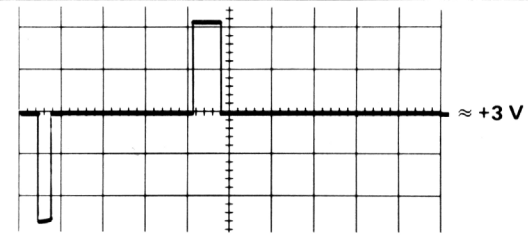 |
| 13 | ADD TWO ZEROS | 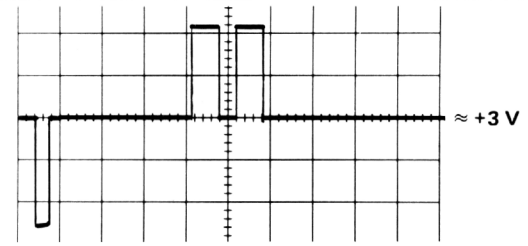 |
| 10 | DECREASE PREFIX | 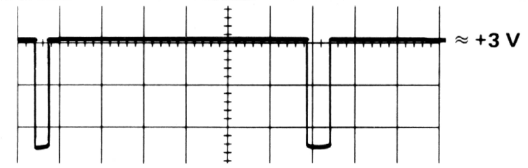 |
| 11 | DECREASE PREFIX AND ADD ONE ZERO | 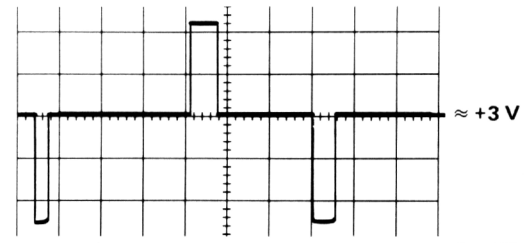 |



**Figure 3-21. Typical output waveforms for Zeros Logic and Memory stage operation (at pin 7 of U3401).**

Another feature of the Zeros Logic and Memory is the Identify function. If 10 units of column current are encoded by the plug-in unit along with row 3 during time-slot 1, the Zeros Logic and Memory produces a negative-going output pulse at pin 1 to switch the Column Data Switch and Row Data Switch to the ninth channel. Then, time-slot pulses 2 through 8 encode an output current through resistors R241 and R248 for column data and R251 and R258 for row data. This provides the current necessary to display the word IDENTIFY in the word position allotted to the channel that originated the Identify command. After completing this word, the Column Data Switch and Row Data Switch continue with the next word in the sequence.

The Word Trigger signal from the Word Trigger stage is connected to pin 9 of U2232 through C2242. At the end of each word of readout information, this pulse goes



http://manoman.sqhill.com

low. This erases the four memories in the Zeros Logic and Memory in preparation for the data to be received from the next channel.

## CHARACTER GENERATOR

The Character Generator stage consists of five similar integrated circuits (U3461, U3463, U3465, U3467, U3469), which generate the X (horizonal) and Y (vertical) outputs at pins 16 and 1, respectively, to produce the character display on the crt. Each integrated circuit can produce 10 individual characters; U3461 (designated "Numerals") can produce the numerals 0 through 9 shown in row 1 of the Character Selection Matrix (Fig. 3-14). Integrated circuit U3463 can produce the symbols shown in row 2 of the Character Selection Matrix and U3465 produces the prefixes and some letters, used as prefixes, shown in row 4. Integrated circuits U3467 and U3469 produce the remaining letters shown in rows 5 and 6 of the Character Selection Matrix.

All the Character Generator stages receive the Column Digital Data from the Column Decoder U3418 in parallel. However, only one of the Character Generators receives row data at a particular time and only the stage receiving this row data is activated. For example, if column 2 is encoded, the five character Generators are enabled so that a 1, >, $\mu$, V, or an N can be produced. If row 4 has been encoded at the same time, only the Prefix Character Generator U3465 will produce an output to result in a $\mu$ being displayed. The activated Character Generator provides current output for the Format Generator to produce the selected character on the crt. In a similar manner, any of the characters shown in the Character Selection Matrix can be displayed by correct addressing of the row and column.

## DECIMAL POINT LOGIC AND CHARACTER POSITION COUNTER

Decimal Point Logic and Character Position Counter U3470 performs two functions. The first function is to add a staircase current to the X (horizontal) signal to space the characters horizontally on the crt. After each character is generated, the negative-going edge of the Ready signal at pin 5 advances the Character Position Counter. This produces a current step output at pin 3 which, when added to the X signal, causes the next character to be displayed one character space to the right. This stage can also be advanced when a Space instruction is encoded so a space is left between the displayed characters on the crt. Row 10 information from the Row Decoder is connected to pin 4 of U3470. When row 10 and column 0 are encoded, the output of this stage advances one step to move the next character another space to the right. However, under this condition, no display is produced on the crt during this time-slot, because the Character Generators are not activated.

Time-slot pulses 1, 2, and 3 are also connected to pin 4 of U2260 through VR3470, VR3471, and VR3472 respectively, and R3470 and R3473. This configuration adds a space to the displayed word during time-slots 1, 2, and 3 even if information is not encoded for display during these time-slots. With this feature, the information displayed during time-slot 4 (scaling data) always starts in the fourth character position whether data has been displayed in the previous time-slots or not. Therefore, the resultant crt display does not shift position as normal-invert or cal-uncal information is encoded. The Word Trigger pulse connected to pin 8 resets the Character Position Counter to the first character position at the end of each word.

The Decimal Point Logic portion of this stage allows decimal points to be added to the crt display. With the Standard Readout Format, row 7, encoded coincident with columns 3 through 7, addresses a decimal at one of the five locations identified in row 7 of the Character Selection Matrix (Fig. 3-14). This instruction refers to the decimal point location in relation to the total number of characters possible in one word (see Fig. 3-22). For example, column 3 encoded with row 7 during time-slot 1 places a decimal point in location number 3. As shown in Figure 3-22, this displays a decimal point after the third character that can be displayed on the crt. (The first three time-slots produce a space whether data is encoded or not; see previous paragraph.)

When decimal-point data is encoded, the crt is unblanked so a readout display is presented. Because row 7 does not activate any of the five Character Generators, the crt beam is deflected vertically by the application of row-7 data to the Y input of the Format Generator through R3477. This places the decimal point between the characters along the bottom line of the readout word. After the decimal point is produced in the addressed location, the crt beam returns to the location indicated by the Character Position Counter to produce the remainder of the display.

## FORMAT GENERATOR

The X- and Y-deflection signals produced by the Character Generator stage are connected to pins 2 and 7, respectively, of the Format Generator. The Channel Address Code from the Channel Counter is also connected to pins 1, 8, and 15 of this stage. The Channel Address Code directs the Format Generator to add current to the X and Y signals to deflect the crt beam to the area of the crt associated with the plug-in channel that originated the information (see Fig. 3-12). The Channel Address Code and the resultant word positions are shown in Table 3-3, in the Channel Counter part of this discussion. The Ready signal at pin 13 (coincident with the X/Y Inhibit Command output)



http://manoman.sqhill.com

activates this stage when a character is to be displayed on the crt. The ratio of resistor R3468 to R3480 determines the horizontal and vertical size of the displayed characters. The character position current from the Decimal Point Logic and Character Position Counter stage is added to the X (horizontal) input signal to space the characters horizontally on the crt (see previous discussion).

### Y-Output

The Y-output signal at pin 6 of Format Generator U3480 is connected to the Y-Output amplifier, Q3486 and Q3493. This stage provides a low-impedance load for the Format Generator while providing isolation between the Readout System and the driven circuits. Vertical Separation adjustment R3491 changes the gain of this stage to control the vertical separation between the readout words displayed at the top and bottom of the graticule area.

### X-Output

The X-Output amplifier Q3489 and Q3499 operates like the Y-Output amplifier, to provide the horizontal deflection from the readout signal available at pin 4 of U3480. The gain of this stage is fixed by the values of the resistors in the circuit.

**Display Sequence.** Figure 3-23 shows a flow chart for the Readout System. This chart illustrates the sequence of events that occurs in the Readout System each time a character is generated and displayed on the crt.

## 7 SIGNALS OUT

The Signals Out circuit provides the +SAWTOOTH and +GATE signals to the front panel. These output signals are samples of signals from the time base.

Diagram 7, a schematic of the Signals Out circuit, is shown in Section 8 (Diagrams and Circuit Board Illustrations) of this manual. Gray shaded lines divide the circuitry into major stages. Subheadings in the following discussion use the stage names to further identify portions of the circuitry on diagram 7.

### +SAWTOOTH AMPLIFIER

The sawtooth signal from the time base is connected to the Sawtooth Amplifier stage through series resistor R91 (see Diagram 3).

Transistors Q1943-Q1942-Q1946 form an inverting feedback amplifier. Gain of the stage is about 2, as determined by the ratio of feedback resistor R1944 to the input resistance (made up of R1940 and R91 on diagram 3.)

### +GATE AMPLIFIER

The +GATE signal originates in the time base. Before a gate occurs, Q1934 is biased off and Q1938 is conducting; its collector potential is low enough to turn off Q1928. When a gate signal occurs, it is coupled to the base of Q1934, causing it to conduct and thereby

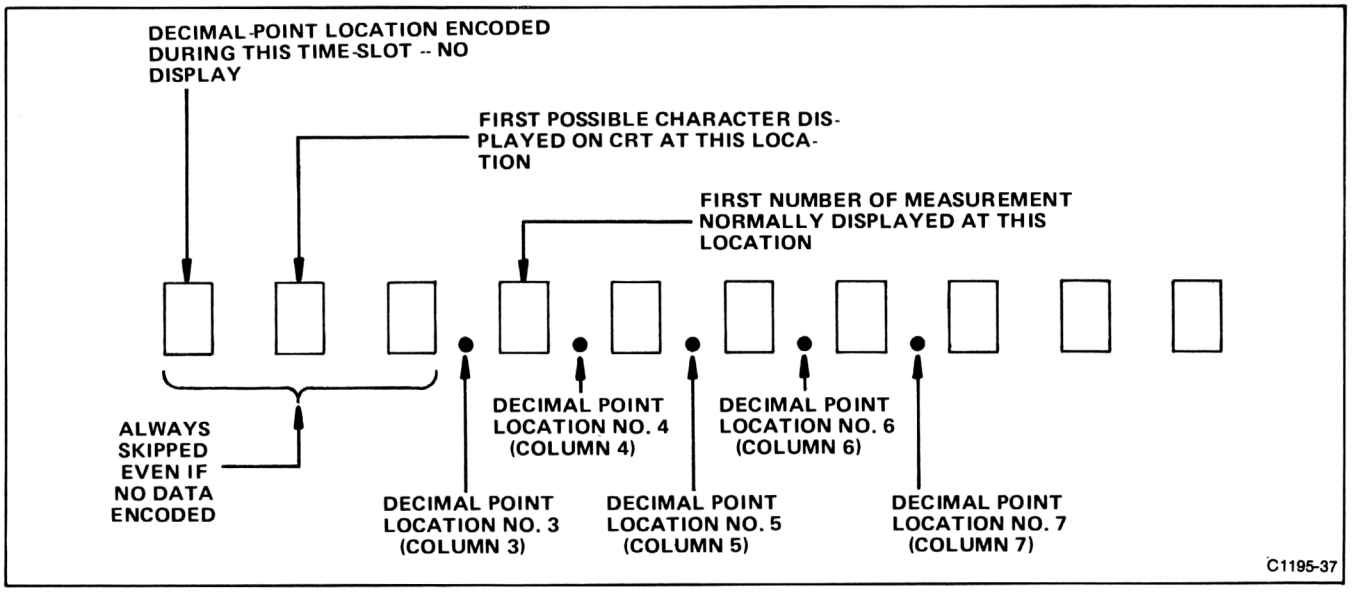


**Figure 3-22. Readout word relating 10 possible character locations to the decimal point instructions that can be encoded; and the resultant crt display.**



http://manoman.sqhill.com

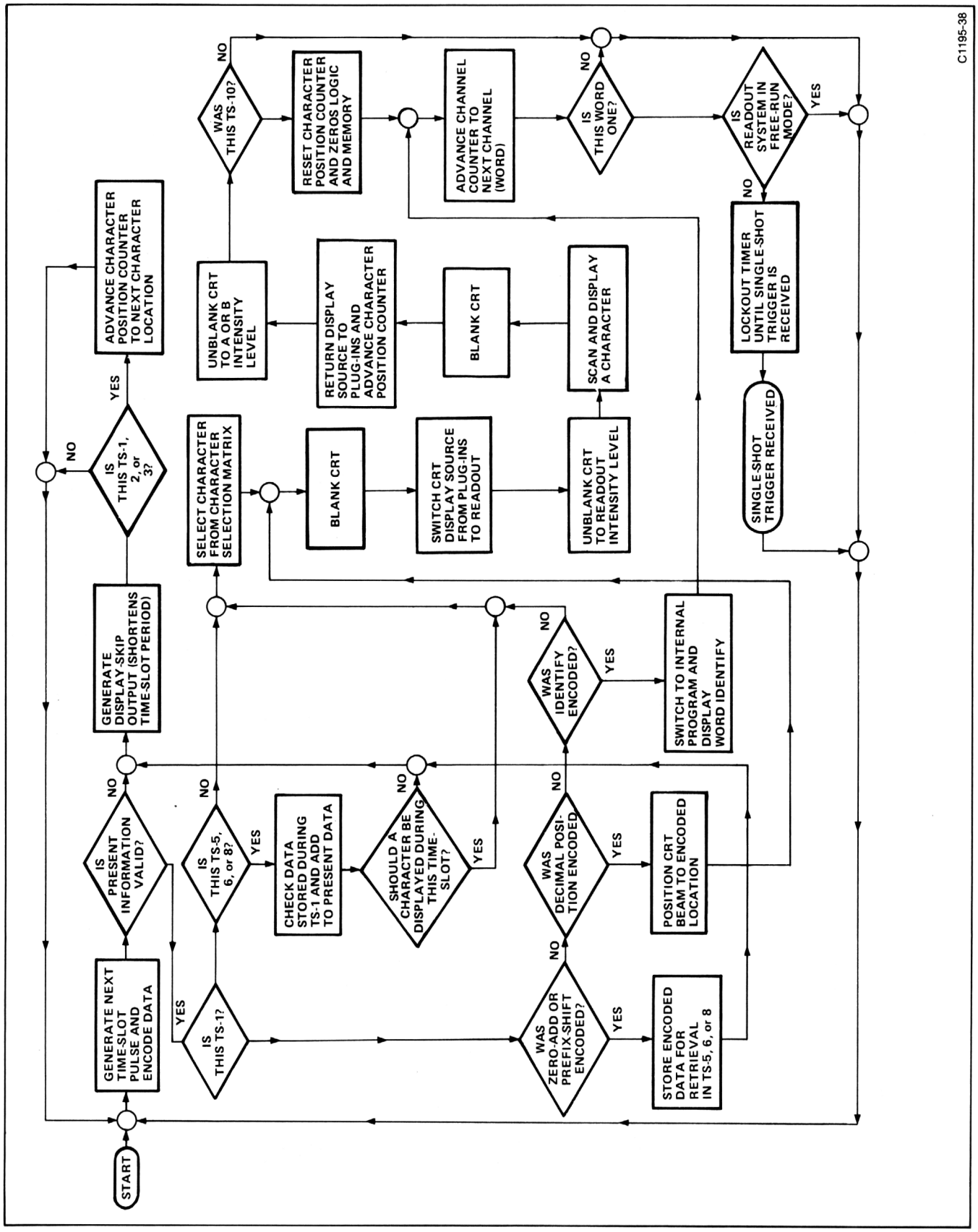


Figure 3-23. Flow chart for character generation by the Readout System.



http://manoman.sqhill.com

cutting off Q1938. The current through R1911 now flows through Q1928 to produce the + GATE signal. In pulsed mode, the signal at the the collector of Q1934 drives the Graticule Illumination stage or the readout system.

### GRATICULE ILLUMINATION

Variable resistor R1900 (GRAT ILLUM) determines the brightness of the graticule lights (except when in the PULSED position) by controlling the output of the graticule light supply (see Low-Voltage Regulators, diagram 15). Variable resistor R1902 (PRESET) determines the brighness of the graticule lights when the GRAT ILLUM control is set to PULSED. In the PULSED mode, the graticule lights are gated on for approximately 0.5 second. Programmable unijunction transistor Q1908, in conjunction with Q1910, generates the pulse to turn on the graticule lights. A negative signal (from the MAN pushbutton, the +Gate or from an external input) will cause Q1908 to conduct and start discharging C1908. At this time, Q1910 turns off, which allows R1902 to control the output of the graticule light supply. Capacitor C1908 discharges until Q1908 cannot maintain conduction. As Q1908 turns off C1908 begins to charge positive until the zener voltage of VR1910 is reached which turns on Q1910; its collector then goes negative to turn the graticule light supply off.

When in the PULSED mode and operating from the +GATE source, the graticule lights will turn on momentarily at the trailing edge of the +Gate (end of each sweep).

## 8 VERTICAL CHANNEL SWITCH

The Vertical Channel Switch circuit selects the vertical deflection signal from the output of the LEFT and/or RIGHT Vertical plug-in compartment(s) for display on the crt.

Schematic diagram 8, in Section 8 (Diagrams and Circuit Board Illustrations) of this manual, shows the Vertical Channel Switch. Gray shaded lines divide the circuitry into major stages. Sub-headings in the following discussion use the stage names to further identify portions of the circuitry on diagram 8.

### CHANNEL SWITCH

The vertical deflection signal from the left and right vertical plug-in units is either terminated within the stage or coupled through the stage as determined by the Vertical Channel Selector stage. The Channel Switch stage is made up primarily of integrated circuit U668. Input pins 7 and 9 provide a differential input for the signal from the right vertical plug-in unit. Input pins 17 and 19 provide a differential input for the signal from the left vertical plug-in unit. The differential output signal at pins 3 and 13 is connected to J694 and J592, respectively.

Components U682, Q682, Q676, and Q672 supply standing current to U668 and maintain the output common-mode dc level at +8.5 volts for all Channel Switch modes. The common-mode level at pins 3 and 13 of U668 is sensed by R559-R659 and compared with a reference level set by divider R680-R681. Assume, for example that pin 2 of U682 is lower than pin 3, indicating an output level below 8.5 volts. The pin 6 output of U682 will be driven positive and current will flow in R683. This current must be supplied from the +15 V supply via R682, thereby lowering Q682's base voltage and increasing its the collector current. Transistor Q676 operates as a common-base amplifier and passes along the increased collector current to pin 3a of U668. This increases the output common-mode level and brings U682 into balance. The voltage at pin 3a of U668 depends on the Channel Switch mode: in Left, Right, Alt, or Chop modes, pin 3a is at +10.5V; in Add mode it is +12.5 V; when X-Y Inhibit is high, pin 3a is +8.5 volts. In all modes the current supplied by Q676 is 160 milliamperes plus or minus small variations required to keep the output level at +8.5 volts.

### VERTICAL CHANNEL SELECTOR

The Vertical Channel Selector interfaces the Channel Switch, U668, to the logic signals arriving from the Main Interface. The Channel Switch stage requires two pairs of complementing control voltages; one pair for each channel. The high control voltage is +4.0 V, the complementing low voltage is +3.5 V. To select a channel, the high level must be applied to the On input of U668 (pin 2 for Left, and pin 12 for RIGHT VERTICAL MODE selector positions) and the low level must appear at the Off input (pin 1 for Left, and pin 11 for Right VERTICAL MODE selector positions). To inhibit a channel the control voltages are reversed.

When the VERTICAL MODE selector is set to LEFT the Display Right Command line, entering on P680 pin 6, is set low (-0.6 V), the Add line (P680 pin 5) is low (0 V) and, normally, X-Y Inhibit is low (-0.6 V). Transistors Q652, Q658 and Q558 are turned on; Q656 and Q556 are off. The result is that pins 1 and 12 of U668 are pulled down to +3.5 V but pins 2 and 11 are pulled down only to +4.0 V. Consequently, the Left Vert channel is turned on while the Right Vert channel is turned off. Signals appearing at J602 and J603 are amplified and fed to the



http://manoman.sqhill.com

outputs at J592 and J694. Similarly, if Display Right is high (+1 V), the Right Vert channel is turned on and the Left Vert channel is turned off. Signals from the Right Vert channel are amplified and fed to the outputs. Left Vert channel signals are terminated in U668.

When the VERTICAL MODE selector is set to either ALT or CHOP, the Display Right Command signal line switches between the low and high levels at a rate determined by either the Chop Counter or Vertical Binary stages (see Logic description diagram 4). This action displays the signal from the left vertical unit when the Display Right signal line is low and displays the signal from the right vertical unit when the signal line is high.

When Add vertical mode operation is selected, the Add signal line is high, and the Display Right Signal is low. This allows both the right and left vertical signals to pass to the output of U668. The signals from both vertical units are algebraically added and the resultant signal determines the vertical deflection. The X-Y Inhibit command has absolute control over the output of the Channel Switch stage. Quiescently, this signal is low; however when the Readout System is ready to display information on the crt, this level goes high, to block the signals from both vertical units.

When the X-Y Inhibit line is high (+1 V) Q652 is turned off. Current in R653 now flows via CR552 and CR654, lowering the base voltage of Q556 by one diode drop, and that of Q658 by two diode drops. This ensures that Q558 and Q656 are turned on regardless of the state of the Display Right Command or Add lines.

### RIGHT AND LEFT CHANNEL FEEDBESIDE

The operation of the Left and Right Channel Feedbeside stages is identical. Only the Right Channel Feedbeside is described here.

The Feedbeside stage compensates for low-frequency imperfections in the frequency response of the Channel Switch stage, U668. Self-heating of the transistor base-emitter junctions of some transistors within U668 causes the low-frequency gain to exceed the midband gain. To correct this, a portion of the input signal is picked off through R502 and R504 and applied to U508. This differential signal is converted to a single-ended signal and distributed into four RC networks with different time constants. Variable components R512, R515, R520, R525, R530, and C538 are adjusted to provide an accumulated waveform. This waveform is converted to a paraphase signal by U538, Q542 and Q548, and injected into U668 via pins 6 and 4, where it is subtracted from the signal entering U668 at pins 7 and 9. Proper adjustment results in flat-frequency response and optimum transient response at the output.

## 9 VERTICAL AMPLIFIER

The Vertical Amplifier circuit provides final amplification for the vertical signal received from delay-line DL592 (shown on diagram 8) before it is applied to the crt vertical deflector. In addition, a low-frequency signal to provide the crt scale factor readout is accepted at the Y Readout input. The vertical portion of the Beamfinder function is also handled in the Vertical Amplifier.

Diagram 9, in Section 8 (Diagrams and Circuit Board Illustrations) of this manual, is a schematic diagram of the Vertical Amplifier. Gray shaded lines divide the schematic into major stages. Subheadings in the following discussion use the stage names to further identify portions of the circuitry on diagram 9.

### DELAY-LINE COMPENSATION

Delay-line DL592 (diagram 8) delays the vertical signal approximately 51 nanoseconds to allow the horizontal circuits time to initiate a sweep before the vertical signal reaches the crt vertical deflector. This allows the instrument to display the triggering event when using internal triggering. The delay line is composed of a matched pair of 50 ohm coaxial cables. The signal from the delay lines is coupled on to the 50 Ω microstrip via J702 and J704. Transient response front-corner adjustment is provided by RLC network R705, C705 and parasitic inductance of C704.

Hybrid circuit U762 and its associated circuitry provides frequency compensation to offset delay line losses due to "skin-effect" in the cable. This compensation is achieved by attenuating the signal at low-frequencies approximately 4.8 dB. At high frequencies (above 1.5 gigahertz) the signal passes with little attenuation. Hybrid circuit U762 also terminates the delay line in its characteristic impedance (50 ohms) at frequencies greater than about 50 MHz. At dc U762 presents an impedance of 41 Ω to each cable; reverse termination of U668, Vertical Channel Switch, prevents standing waves below 50 MHz.

### OUTPUT AMPLIFIER

The output amplifier consists of two thin-film, hybrid, wideband amplifiers, U842 and U862, and their associated bias circuitry. These amplifiers provide a voltage gain of approximately 4.5 each, resulting in an overall voltage gain of about 11 from J702 and J704 to the crt. All signal path interconnections between and within hybrids are made with 50-ohm strip transmission lines via the HYPCON system.

Integrated circuit U842 receives the delayed and compensated signal from U762 at pins 7 and 9. Variable



http://manoman.sqhill.com

resistor R830 provides vertical amplifier gain adjust by shunting the differential signal. Trimmer R836 is a transient response adjustment effective in the first 10 nanoseconds of the step response. The output of U842 is fed through level shifters VR852 and VR862 to U862. Bias current for U842 is supplied by Q892 and R893 through U862. Active devices Q892, U876B and associated circuitry operate as a power supply with (negative) output impedance of -25 ohms. This supply acts to maintain constant common-mode dc level at the input to U862 regardless of current demand from U842.

When pressed, the BEAMFINDER button changes the current source for U862 to provide the Beamfinder function. Normally, the current source for U862 comes from the +15 V supply through Q862 and R862. However, when the BEAMFINDER is pressed in it turns off Q862, leaving R862 as the only current source for U862. This limits the dynamic range of the stage by limiting its available current, so the display is compressed vertically within the crt graticule area.

Components Q878, VR878, and R878 clamp the output dc common-mode level to less than 44 V when the BEAMFINDER button is pressed.

The signal at the output of U862 (pins 17 and 19) is connected via a flexible coplanar transmission line to the crt vertical deflector neck pins. A distributed deflector is used in the crt for maximum bandwidth. The signal travels along the deflector at a velocity essentially the same as the velocity of the electron beam passing through the vertical deflector. This synchronism of the deflection signal and the electron beam reduces the loss in high-frequency sensitivity due to electron transit time through the deflector. After propagating along the deflector the signal exits the crt via a second flexible coplanar transmission line and terminates in U883. A double-terminated transmission-line system with a characteristic impedance of 200 ohms side-to-side is formed by the output of U862, the two flexible lines, the crt Vertical deflector, U883, and the crt vertical termination. Standing current for U862 is supplied from +50 V supply via U883 and the crt deflector transmission line system.

Bias levels for U862 are provided by U876A. Diode CR875 temperature-compensates the +23.9 V supply to maintain constant standing current in U862.

## FEEDBESIDE

The Feedbeside stage compensates for low-frequency imperfections in the frequency response of the Output Amplifier stage, U842 and U862. Self-heating of the transistor base-emitter junction of some transistors in U842 and U862 cause the low-frequency gain to exceed the midband gain. To correct this, a portion of the input signal is picked off via the Delay Line Compensation stage and applied to U782. The paraphase signal is converted to a single-ended signal by U782 and distributed into six RC networks with different time constants. Resistors R785, R787, R791, R795, R801, R806, and C808 are adjusted to provide an accumulated waveform. This waveform is converted to a paraphase signal by U808, Q824, and Q814, and injected into U842 through pins 1 and 5, where it is subtracted from the signal entering U842 at pins 7 and 9. Proper adjustment of the seven RC components results in a flat frequency response and optimum transient response at the output of U862 (pins 17 and 19).

Diodes CR767 and CR777 improve the vertical amplifier overdrive recovery by limiting the amplitude of the feedbeside correction signals that exceed the dynamic range of the Output Amplifier. Thermistor RT813 adjusts the gain of the feedbeside amplifier to provide increased correction at high ambient temperature where transistor self-heating is aggravated.

## AUXILIARY AMPLIFIER

The Auxiliary Amplifier is used to inject low-frequency (≤ 2 MHz) signals associated with crt scale-factor readout and alternate sweep switching into the vertical deflection system. Normally, the X-Y Inhibit signal entering on pin 8 of P789 is LO (-0.6 V), Q722 and Q712 are off, and Q732 is on. The Aux Y-Axis signal on pin 2 of of P790 is coupled through Q732 to the input of paraphase amplifier Q742 and Q752. Transistors Q748 and Q758 form a shunt-feedback amplifier with sufficient gain to drive the inputs of U762 (pins 5 and 11).

When the Readout system initiates a character display it sets the X-Y Inhibit logic level high (+1 V). Emitter follower Q718 turns Q722 on. The voltage on the collector of Q722 drops to zero, which turns Q732 off and turns Q712 on. The Aux Y-Axis signal is then blocked by Q732. Y Readout signals are inverted by U705. Readout centering is added to the composite readout signal and applied to the input of the paraphase amplifier via Q712. At the end of the character display period X-Y Inhibit returns to -0.6 V.

## POWER SUPPLY SHUTDOWN

The Power Supply Shutdown stage monitors the 23.9 V supply. If this voltage drops significantly, indicating an overload condition, Q864 will turn on pulling the gate of Q873 positive to cause Q873 to turn on. This action overloads the +50 V power supply which in turn causes the high-efficiency power supply to shut down.

A drop in the +23.9 V supply may indicate an open connection or a short to ground in the crt deflector transmission line system (or supply). The latter case is particularly serious and may damage U862 even with the Power Supply Shutdown stage operating. For this



http://manoman.sghill.com

reason care should be taken not to short or open the crt deflector connections when the power is on.

The Power Supply Shutdown circuit also accepts an input from the Horizontal Amplifier circuit (diagram 11) via a thermal cutout, from pin 10 of P782. This input is normally about +14.8 V but will decrease if a fault occurs in the Horizontal Amplifier or if the thermal cutout opens. The latter case indicates excessive temperature in the Horizontal and Vertical Amplifier circuits which will significantly reduce amplifier operating life. The thermal cutout will open at about +55° C ambient if the fan is operating properly or at +35° C ambient if the fan is disabled or totally blocked.

## 10 HORIZONTAL CHANNEL SWITCH

The Horizontal Channel Switch receives the output of the HORIZ plug-in unit and an X-Y Inhibit signal from the Readout System.

The Horizontal Channel Switch has switching capability that the R7103 does not need because it has only one horizontal channel.

Diagram 10, in Section 8 (Diagrams and Circuit Board Illustrations) of this manual shows the Horizontal Channel Switch. Gray shaded lines divide the schematic into major stages. Subheadings in the following discussion use the stage names to further identify parts of the circuitry on diagram 10.

### CHANNEL SWITCH

The Channel Switch consists mainly of U962. The differential horizontal signal from the HORIZ plug-in compartment is applied to pins 7 and 9. The Display B line is set permanently to -0.6 V, which turns Q924D on and turns Q924C off. The output of Q924D and C turn on the A channel of U962, and turn on Q924E. When turned on, Q924E inhibits the B channel of U962.

Integrated circuit U962 has a standing current of about 37 mA per channel. The standing current in channel A is the quiescent current drawn by current sinks Q992 and Q994, and by R998 and R999. This standing current flows out of pins 3 and 13, and becomes the standing current in U1018 (diagram 11), the Input Clamp. It is important that the current sink described above controls the standing current in the Channel Switch and the Input Clamp. The current comes from the +15 V supply (diagram 11) mainly via R1047, R1043, R1067, and R1063 at the stage output. Thus the current sink described above affects dc levels from the Channel Switch to the input of U1082.

### A CHANNEL FEEDBESIDE

The A Channel Feedbeside circuit compensates for low-frequency imperfections in the frequency response of Channel Switch U962. Self-heating of the emitter-base junctions, of some transistors in U962, causes the low-frequency gain to appear greater than the midfrequency gain. To correct this, a portion of the input signal is picked off via R972 and R971 and applied to U974. The differential signal is converted to a single-ended signal and distributed to four resistor-capacitor (RC) networks of various time constants. Resistors R975, R980, R982, R985, and R988 are adjusted to provide an accumulated waveform. The accumulated waveform is converted to a paraphase signal by Q992 and Q994, then injected into U962 via pins 16 and 14, where it is subtracted from the signal entering U962 at pins 7 and 9. Proper adjustment results in a flat frequency-response and optimum transient-response at the output.

## 11 HORIZONTAL AMPLIFIER

The Horizontal Amplifier circuit amplifies the push-pull horizontal deflection signal from the plug-in unit installed in the horizontal compartment, and connects it to the horizontal deflection plates of the crt.

Diagram 11, in section 8 (Diagrams and Circuit Board Illustrations) of this manual, is a schematic diagram of the Horizontal Amplifer. Gray shaded lines divide the schematic into major stages. Subheadings in the following discussion use these stage names to identify parts of the circuitry on diagram 11.

### READOUT POSITIONING

When readout is displayed, the X Readout signal is applied to the Horizontal Amplifier through P882. At the same time, a high on the X-Y Inhibit line causes Q1022 to conduct, turning Q1024 off. This action enables the horizontal readout center (R.O. CTR) adjustment R1025 to horizontally position the readout display on the crt.

### OUTPUT AMPLIFIER

The Output Amplifier stage is a parallel path amplifier, having a fast path and a slow path. The fast path is a non-feedback amplifier, with 50 Ω impedance throughout, except at the output. The slow path is a feedback amplifier, used to correct thermal gain errors in the fast path, and to inject the readout signal.

#### Fast Path

The fast path consists primarily of U1082 (the driver) and U1094 (the output amplifier).



http://manoman.sqhill.com

The differential signal is applied to pins 7 and 9 of U1082. The input is 50 Ω push-pull (100 Ω differential). The gain of U1082 is set by the HF Gain adjustment R1082 to provide a nominal current gain of about 3. The output of U1082 is applied to the input of U1094, the output stage. This stage has a 50 Ω push-pull input. Accordingly, the voltage gain through the driver will be about 3, because it has equal input and output resistances.

The output stage, U1094, has a current gain of about 3.3, and has a differential load impedance of 365 Ω. The voltage gain of the stage is then about 12 (the current gain times the resistance gain).

The crt has a distributed horizontal deflection structure with a differential impedance of about 365 Ω. The crt horizontal deflection structure is connected to the amplifier output and to the horizontal terminator resistor via the 365 Ω flexible transmission lines. The termination board (A2O) is adjustable to match the crt impedance.

### Slow Path

The slow path is a feedback amplifier which is used to correct for thermal errors inherent in the fast path. The slow path can be considered to be an operational amplifier.

The slow path receives its input via R1043 and R1063, which pick off a fraction of the output signal from the Input Clamp stage. The input signal is amplified by Q1046 and Q1066 and injected into the operational amplifier summing nodes (base of Q1052 and Q1072). The output signal at the crt is picked off by a pair of 20 kilohm resistors within U1094. This signal is applied through R1034 and R1037 to the summing nodes. Any error signal at the summing nodes is amplified by the differential pair Q1052 and Q1072 and by the differential pair Q1058 and Q1078. The amplified signal is then injected into the fast path via pins 1 and 5 of U1082, to correct the signal applied to the crt.

The gain of the slow path is set with the LF Gain adjustment, R1062, independent of the fast path gain. The step response of the slow path is adjusted using the Delay adjustment C1036 and S.P. Damp R1073, the slow path damping adjustment.

Because the slow path is a feedback circuit, it can cause difficulties in locating problems in the output amplifier circuit. The feedback path can be disabled by removing Q1052 and Q1072, and shorting the emitter run to the collector run for each transistor on the circuit board. This can be done by inserting a U-shaped wire, the same diameter as the transistor leads, in the emitter and collector sockets. With the feedback path open, the amplifier will operate as before, with two exceptions. First, thermal errors will not be corrected; and second, readout is disabled since it is injected into the slow path. All dc voltages will remain essentially unchanged. This will simplify troubleshooting the Horizontal Amplifier.

### INPUT CLAMP

The Input Clamp prevents the Output Amplifier stage from being overdriven. Signal limiting occurs in the Input Clamp stage when the + and - horizontal signal, applied to pins 5 and 8 of U1018, approaches a level which will overdrive U1094's input transistors. The Input Clamp requires about 75 milliamperes from pin 16 to pin 5 and from pin 13 to pin 8 for proper operation. This current is supplied by the Channel Switch stage on diagram 10. Pins 13 and 16 are normally about 7.0 volts, and pins 5 and 8 about +6.2 V.

The Clamp Adj, R1005, sets the voltage at pin 6 of U1018 about 0.3 volts more positive than pins 5 and 8. If a differential signal is applied to pins 5 and 8 of the Input Clamp stage, with pin 5 going negative and pin 8 going positive; clamping will occur when pin 5 goes negative enough to turn on the transistor inside U1018 whose emitter is tied to pin 5. The signal from pin 5 flows through the transistor to pin 13, effectively shunting the excess signal to the other side of the differential line. In a like manner, the other transistor causes clamping when pin 5 is positive going and pin 8 is negative going. Note that both transistors are never on at the same time.

The Input Clamp stage output common-mode voltage is sensed at pin 15 of U1018 and applied to U1006. This causes the voltage at pin 6 to track the common-mode voltage in the Input Clamp stage, so that the clamping point does not change as the common-mode voltage changes.

The Beamfinder input goes from 15 volts to ground when the BEAMFINDER button is pressed. This raises the voltage at pin 6 of U1018, which confines the horizontal signal to the crt screen.

## 12 INTENSITY LIMITER AND Z AXIS AMPLIFIER

Diagram 12, in Section 8 (Diagrams and Circuit Board Illustrations) of this manual, shows a schematic of the Intensity Limiter and Z-Axis Amplifier. Gray shaded lines divide the circuitry into major stages. Sub-headings in the following discussion use the stage names to further identify portions of the circuitry in diagram 12.



http://manoman.sqhill.com

## INTENSITY LIMITER

The gain of the microchannel plate is reduced in proportion to the logarithm of the charge output. In the area of sustained trace operation this gain reduction manifests itself as reduced writing speed. The Intensity Limiter stage limits the crt screen current and prevents long-term, on-screen trace operation. Even with the Intensity Limiter stage it is possible to incur distinguishable display gain loss, depending on the use of the instrument. For more information on proper usage see Reduction of Display Gain with Display Output Charge, in the Operating Instructions part of this manual.

The Screen I Sense output of the Anode Voltage Multiplier, U1700 (diagram 13) carries a current equal to the average screen current. Operational amplifier U1952, with feedback resistor R1951, converts this current to a voltage at the rate of 1 volt per microampere of average screen current. A divider string formed by R1952, R1959 and R1960 biases the inverting input of operational amplifier U1958B at 0.2 volt. When the average screen current is greater than 0.2 microampere the noninverting input of operational amplifier U1958B is more positive than +0.2 volt and its output, TP1962, goes positive. Via R1975, this turns on the LIMITED VIEWING TIME indicator, DS1970., Also, Q1974 is turned off, allowing C1971 to charge. In addition to this, the 3 hertz oscillator is started (timer U1968 oscillates at a frequency 3 hertz). When the output of operational amplifier U1958B goes positive, pin 4 of U1968 will go positive and start the oscillator.

Operational amplifier U1970 and C1971 form an integrator, integrating the current through R1958. This resistor is connected to the output of operational amplifier U1952 so that the current through R1958 is proportional to the screen current. The output of U1970 goes negative from ground. When the voltage reaches −10 volts timer U1986 starts. How fast the output reaches −10 volts depends on the average screen current. As will be seen later the average screen current cannot exceed 2 microamperes. At 2 $\mu$A of screen current, the output of the integrator will reach the −10 volt output level in about one minute. For below-average screen currents, Q1974 will be turned on to prevent the integrator from operating. At an average screen current of 25 nanoamperes the integrator reaches the −10 volt level in about 1 hour. If the output of the integrator has not reached the −10 volt level and the average screen current drops below 25 nanoamperes, Q1974 will turn on through R1974 to discharge C1971. This will give the integrator a fresh start when the screen current again exceeds the 25 nanoampere threshold.

When the output of U1970 reaches −10 V and pin 2 of timer U1986 reaches about +2 volts, the timing starts. The output of U1986, pin 3, goes high but returns low after 10 seconds when the timer has timed out. Capacitor C1985 sets the period of the timer.

Timer U1986 starts the following sequence of events: With pin 3 of U1986 low, diode CR1991 clamps the input of the red LED (DS1944) to ground. When U1986 pin 3 goes high the SHUTDOWN LED receives current from U1986 via R1969 and CR1993. It blinks at a 3 hertz rate to indicate that shutdown will occur in about 10 seconds.

Integrator capacitor C1971 is discharged through divider R1988 and R1989, and the base of Q1980 is held at +2.4 volts. If pin 3 of U1986 is low Q1982 conducts, and the collector voltage of Q1982 turns Q1978 off. When pin 3 of U1986 goes high Q1982 stops conducting and Q1978 turns on to discharge capacitor C1971, which allows the integrator a fresh start. The waveform at pin 3 of U1986 is differentiated by C1993 and inverted by Q1997. Flip-flop U1992 triggers on a positive-going pulse, so at the end of the 10-second timing interval U1992 is triggered and produces a high on the Z-Axis Off line.

This output goes high to cause the following to occur:

1. The Z-Axis Amplifier turns off.

2. The red LED is turned on steadily, to indicate that the Z-Axis Amplifier is shut down. Transistor Q1994 turns off when the Z-Axis Off signal goes high and the SHUTDOWN indicator is turned on from the +15 volt supply through R1994. U1970 applies a high to pin 2 of U1986 to inhibit the 10-second timer.

The Intensity Limiter stage can be reset several ways:

1. By pressing RESET button S1988 before shutdown occurs, or by reducing the display intensity so that the average screen current is less than 25 nanoamperes.

   If the RESET button is pressed before shutdown occurs, it shorts the base of Q1980 to ground, Q1982 turns off, and Q1978 conducts to discharge timing capacitor C1971.

   If the screen current is below 25 nanoamperes, the output of U1958B goes low and Q1974 conducts, discharging timing capacitor C1971 through R1974.

2. By pressing RESET button S1988 during the 10-second delay before shutdown (when the red SHUTDOWN indicator is flashing), or by reducing the intensity so that the average screen current is below 25 nanoampere.

   If the RESET button is pressed during the 10-second delay before shutdown occurs, the base of Q1980 is shorted to ground, Q1982 turns off, and Q1978 conducts to discharge timing capacitor C1971.



http://manoman.sqhill.com

If the screen current goes below 25 nanoamperes during the 10-second delay before shutdown occurs, the output of operational amplifier U1958B goes low, the base of Q1998 is pulled low, Q1998 conducts and Q1999 is saturated. The saturation of Q1999 has the same effect as pressing the RESET button.

3. By pressing RESET button S1988 after shutdown occurs. During shutdown, Q1974 and Q1978 conduct, discharging timing capacitor C1971 through R1974, and resetting the 10-second timer.

   Also, flip-flop U1992 is reset and the Z-Axis Off signal goes low and turning the Z-Axis Amplifier back on.

4. By a low-logic level on the SINGLE SWEEP RESET input on the rear panel.

If the average screen current exceeds 2 microamperes the output of operational amplifier U1952 exceeds +2 volts. Because the noninverting input of U1958A is biased at +2 volts, its output will go positive and diode CR1963 will conduct. The current through Q1956 will increase and the voltage of the intensity reference at TP1956 will go positive from -10 volts. The intensity reference is connected to the INTENSITY control network (see Mode Switch and Calibrator, diagram 2). If this reference goes more positive the input drive to the Z-Axis logic is reduced. Therefore, the beam current of the crt is reduced which results in a lower average screen current. When this feedback loop reaches equilibrium, the voltage of the intensity reference is such that the average screen current equals 2 microamperes. Single-shot screen currents are not limited to 2 microamperes because the feedback loop has a long time constant.

When the intensity limiter is limiting the average screen current to 2 microamperes the output of U1958A is high, saturating Q1970. This causes the yellow LED to flash (indicates that the intensity is limited).

Figure 3-24 illustrates two operating conditions of the Intensity Limiter. The maximum viewing time (approximately 20 minutes) is shown in Figure 3-24A; this occurs with the minimum average screen current of 25 nanoamperes. The minimum viewing time (approximately 2 minutes) is shown in Figure 3-24B; this condition occurs when the intensity is limited to an average screen current of 2 microamperes.

## Z-AXIS AMPLIFIER

The Z-Axis Amplifier stage controls the crt display intensity by varying the crt grid drive. The Logic circuit and the Readout System provide input signals to the Z-Axis Amplifier at J1606 and J1632 respectively.

The Z-Axis Amplifier consists of three stages; an impedance-matching stage, a preamplifier, and an output driver. The impedance-matching stage consists of Q1618 and Q1608. This stage isolates the Readout and Logic inputs from each other and terminates the input cables. The collector current from this stage is fed to the Auto Focus amplifier through R1606, which develops a voltage to drive the Z-Axis preamplifier. Transistor Q1626 limits the voltage drive to the preamplifier by clamping the output of Q1608 at a level by Clamp Level adjustment R1626.

The Z-Axis preamplifier provides a current drive for the output stage. The preamplifier is a transconductance amplifier which consists of Q1632, Q1648, and Q1652. Z-Axis Gain adjust R1637 sets the gain of this stage and is used to set the gain for the entire Z-Axis system. Adjustments R1635, C1635, and R1651 provide current peaking to the output stage for optimum transient response. The Z-Axis Level adjustment R1645 is used to adjust the Z-Axis baseline to the proper level. A Z-Axis Off signal from the Intensity Limiter disables the preamplifier by saturating Q1644.

The output driver is a shunt feedback stage with gain set by R1660. Q1658, Q1668, Q1666, and Q1676 form a direct coupled amplifier with a high open-loop gain; thus the input at the base of Q1658 is a virtual ground. These transistors can provide high- speed transitions in the negative-going direction only. Fast positive transitions are achieved by peaking the base of Q1676 via Q1664 and T1664. Capacitor C1663 adjusts the drive to Q1676 for optimum response. Transistor Q1672 provides collector voltage for Q1676. VR1671, R1677, CR1675, and CR1678 provide protection from high transient voltages.

## AUTO FOCUS

The Auto Focus stage maintains optimum focus of the display over a range of sweep speeds. The crt needs focus correction only at high Z-Axis drive conditions. Consequently, the output of the Auto Focus amplifier is ac coupled to the focus grid. The collector current of Z-Axis impedance matching stage (Q1618 and Q1608), is fed to the input of the Auto focus amplifier, Q1603. The emitter voltage of Q1607 is -8.6 volts. At zero volts drive the collector current of Q1603 is maximum (8 milliamperes) which causes clamping diode CR1609 to conduct. At midrange Z-Axis drive the collector current of Q1603 drops to 6 milliamperes and the voltage at the anode of CR1609 is -8.0 volts which causes the clamping diode CR1609 to barely conduct. A Z-Axis drive greater than midrange will reverse-bias CR1609 and a negative-going signal will appear at the base of Q1617. The amplifier, consisting of Q1617 and Q1620, is noninverting and has a voltage gain of approximately four. The negative going signal at the collector of Q1620 is connected to emitter follower Q1629, then ac coupled through C1628 to the focus grid.



http://manoman.sqhill.com

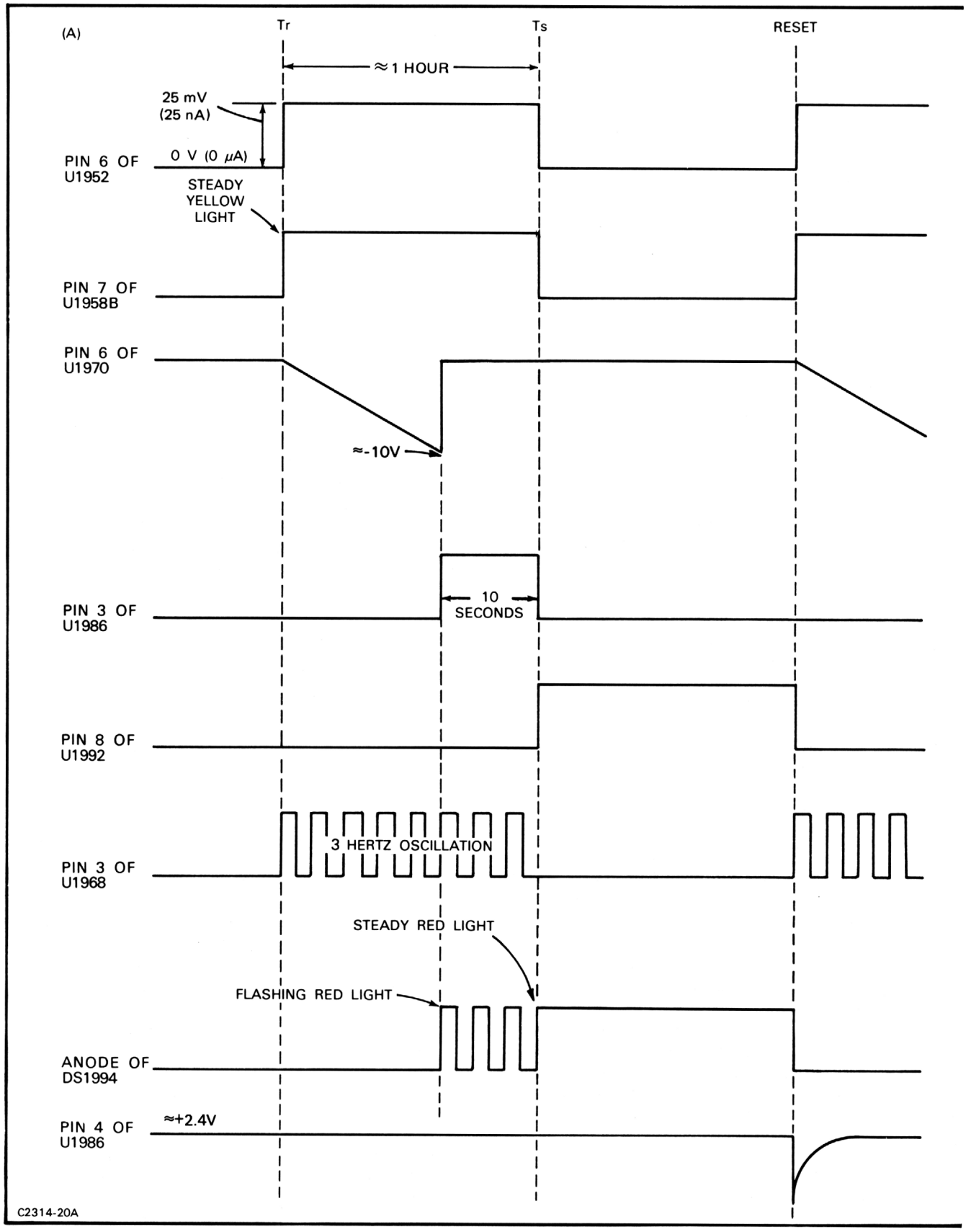


**Figure 3-24. Theoretical timing diagrams for the Intensity Limiting stage.**



http://manoman.sqhill.com

(B)

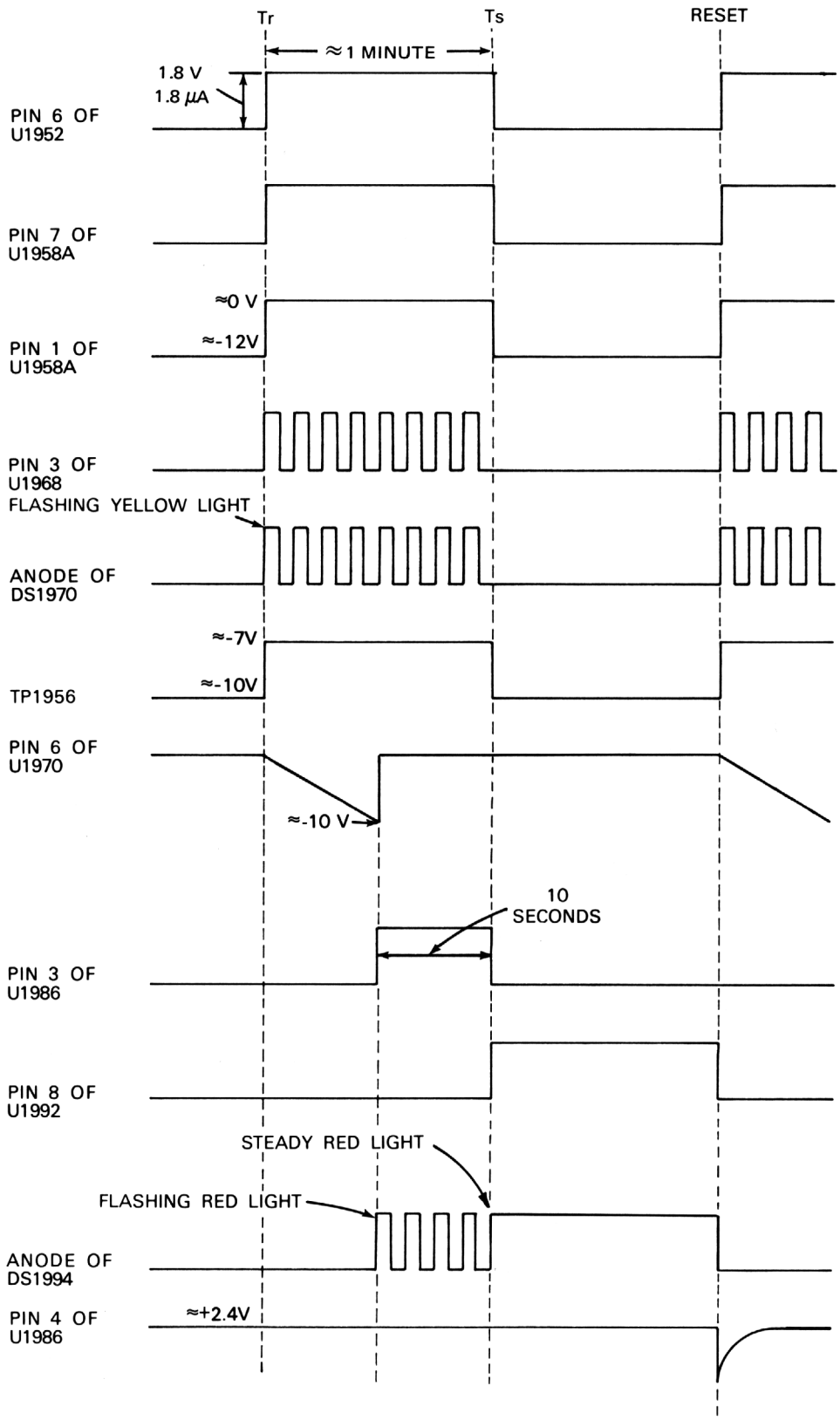


**. .gure 3-24 (cont). Theoretical timing diagrams for the Intensity Limiting stage.**



http://manoman.sqhill.com

# 13 CRT CIRCUIT

Diagram 13, in Section 8 (Diagrams and Circuit Board Illustrations) of this manual, is a schematic diagram of the CRT Circuit. Gray shaded lines divide the circuitry into major stages. Subheadings in the following discussion use the stage names to further identify portions of the circuitry on diagram 13.

## CONTROL GRID DC RESTORER

The Control Grid DC Restorer stage submerges the two low-voltage grid control signals to a large negative potential. These inputs are 1) the output signal from the Z-Axis amplifier, coupled through R1680 to the first input of the Control Grid DC Restorer stage, and 2) the crt grid bias (with its associated crt grid cut off warmup compensation circuit) coupled through R1748 to the second input of the Control Grid DC Restorer stage.

The Control Grid DC Restorer stage is current-driven from the square wave at T1770 pin 9 via R1788, R1789, R1812, and R1811. When the voltage at pin 9 of T1770 goes positive, CR1749 conducts at the voltage determined by the first input, the Z-Axis Amplifier output. This clamping action establishes the positive swing of the dc restorer drive. On the negative swing of T1770 diode CR1747 conducts at the voltage determined by the second input; the crt grid bias voltage. This clamping action establishes the negative swing of the dc restorer drive. The ac swing of the dc restorer is coupled from the low voltage section to the high voltage section by capacitor C1793. On the negative swing of the dc restorer drive, the high voltage end of C1793 is clamped to the -2400 volt supply by CR1794. On the positive swing of the dc restorer drive, CR1792 changes the high voltage end of C1792 to a voltage more positive than the -2400 volt supply by an amount equal to the sum of the absolute value of the voltages of the two inputs; the Z-Axis Amplifier output voltage level and the grid bias voltage level.

The crt cathode voltage is 135 volts more positive than the -2400 volt supply, as determined by the Cathode Supply Regulator stage. Therefore the grid is negative with respect to the cathode by 135 volts minus the sum of the absolute values of the voltages of the Z-Axis amplifier output voltage level and the crt grid bias voltage level. CRT Grid Bias adjustment R1746 is set with the Z-Axis amplifier output at the low level for the proper crt cutoff voltage. The CRT Grid Bias adjustment has a range of about 50 volts.

### Cathode Supply Regulator

The Cathode Supply Regulator stage helps to protect the crt during turn-on of the instrument (see circuit description of the Grid Crow Bar circuit) and when a malfunction of the Control Grid DC Restorer stage occurs. In the case of a malfunction, the grid will become more negative than the cathode thereby turning the crt off.

Neon lamps DS1792 and DS1794 and the resistors in series with the diodes provide protection (voltage and current limiting) to the Control Grid DC Restorer stage during turn-on and turn-off, and short-circuit protection. Capacitor C1681 provides fast ac coupling between the Z-Axis Amplifier stage and the crt grid. The slower ac path is by way of R1680 and C1792.

## FOCUS GRID DC RESTORER

The Focus Grid DC Restorer stage elevates the low voltage focus control to a high negative potential.

The Focus Grid DC Restorer stage is current-driven by the square wave at T1770 pin 9 via R1788, R1789, R1813 and R1814. When that voltage goes positive, CR1820 conducts at the voltage determined by the setting of FOCUS control R309. This clamping action establishes the positive swing of the Focus Grid DC Restorer drive. On the negative swing of T1770, CR1816 conducts at ground. This clamping action establishes the negative swing of the Focus Grid DC Restorer drive. The ac swing of the Focus Grid DC Restorer is coupled from the low voltage section to the high voltage section by C1819. On the positive swing of the Focus Grid DC Restorer drive signal, the high voltage end of C1819 is clamped to the Focus Preset adjustment voltage by CR1819. During the negative swing of the Focus Grid DC Restorer drive, CR1818 charges C1818 to a voltage more negative than the Focus Preset voltage by an amount equal to the voltage set by the FOCUS control.

Neon lamps DS1818, DS1819, and DS1820 and the resistors in series with the various diodes provide protection (voltage and current limiting) to the Focus Grid DC Restorer stage during turn-on and turn-off of the instrument, and short circuit protection.

The voltage from the FOCUS control passes through the BEAMFINDER switch. When the BEAMFINDER switch is pressed, it grounds the input to the Focus Grid DC Restorer, which defocuses the display.

## GRID BIAS SUPPLY

The Grid Bias Supply is a 135-volt power supply connected between the crt cathode and the -2400 Volt Supply. The polarity is such that the cathode is at the more positive potential (-2365 volts). The purpose of the cathode supply is explained later in the Grid Crowbar circuit description.

The -2400 Volt Supply holds the current in the thick film high-voltage resistor R1802 constant at approximately



http://manoman.sqhill.com

100 microamperes. The voltage developed across R1802C is 100 volts and is used as the voltage reference for the cathode supply. The comparator consisting of Q1835 and Q1838 requires both bases to be at the same potential. This condition is satisfied when there is 135 volts across the voltage divider of R1839 and R1840. If the voltage across the voltage divider R1839, R1840 is greater than 135 volts, the base voltage of Q1838 exceeds the base voltage of Q1835. Q1838 turns on harder, increasing the current in the series regulator Q1842. This reduces the current through the voltage divider R1839 and R1840 and lowers the voltage until it is 135 volts. The Grid Bias Supply furnishes current to the cathode, to the focus string, and to the resistor string which supplies the negative voltages to the scan expansion lens. Protection neon lamps DS1842, DS1844, and DS1846 limit the maximum voltage across the supply.

## MICROCHANNEL PLATE SUPPLY

The MCP (Microchannel Plate) Supply receives a 25-kilohertz square-wave signal of about 54 volts peak from the Converter/Rectifiers circuit (diagram 14). If pin 1 of the transformer T1708 were grounded, the transformer would step this voltage up to 625 volts peak. Components C1711, CR1710, CR1711 and C1710 form a voltage doubler to develop 1250 volts dc at TP1775.

Assume that by some means the collector of Q1708 is held at a +20 volt level. The 25-kilohertz square-wave signal is clipped by diode CR1708 to a maximum of +20.6 volts and clipped by diode CR1707 to a minimum of −0.6 volt at the cathode of diode CR1707. With the circuit in equilibrium, the average current in capacitor C1707 must be zero. This is reached when C1707 is charged to 10 volts. This means that a 25-kilohertz square-wave signal of 10.6 volts peak is on pin 1 of transformer T1708. This voltage is subtracted from the 54 volt peak drive at pin 2 of T1708, so the primary of the transformer is driven by a voltage of 43.4 volts peak. The dc output voltage is then reduced to about 1000 volts.

Components U1714A and Q1708 regulate the dc output voltage of T1708. Pin 2 of U1714A is at ground potential and is the current summing point for the regulator. If there is zero current in R1722 and R1719, pin 2 of U1714A can be only at ground potential, when the dc output voltage at TP1775 is +562.5 volts. If pin 2 is above ground, the output of operational amplifier U1714A will go negative, turning off Q1708. This will charge C1708 more positive and reduce the primary drive of the transformer. This will result in a reduced dc output voltage at TP1775 until the voltage on pin 2 of U1714A returns to ground. Resistor R1722 carries the Intensity Sense current developed by the MCP Intensity Tracking stage on the Logic Schematic, diagram 4.

The Intensity Sense current varies between 0 and 50 microamperes depending on the setting of the INTENSITY Control, and gives the MCP Supply voltage a maximum increase of 375 volts. The higher the voltage across the MCP the greater the gain of the MCP (electrons out for electrons in) which results in a brighter crt display (this is needed at faster sweep speeds to obtain writing rate). MCP Gain adjustment R1720 sets the output voltage at TP1775; its range is 300 volts.

MCP Gain Adjustment R1720 controls the writing speed of the instrument. At the factory this adjustment is set so that a single shot, 1 gigahertz sine wave with an amplitude of 7.5 divisions is visible when photographed using type 107 3000 ASA Polaroid film (camera setting is f 1.9 at a reduction ratio of 1:0.85). If the MCP output voltage is set higher both the visual and photographic writing rate increase, however a background scintillation of the MCP may appear on photographs. This effect randomly covers the photographs with small bright spots.

Depending on instrument use, increased MCP output voltage may reduce the display gain. Refer to: Reduction of Display Gain With Display Output Charge in the Operating Instructions section of this manual.

When the INTENSITY control is turned clockwise, the MCP output voltage increases to produce a brighter crt display. This causes the Readout display to be brighter, which is undesirable. IC U1714B prevents this. When the Int Sense current increases from 0 to 50 microamperes, the voltage at pin 5 of U1714B increases from 0 to 1 volt. The voltage at the emitter of Q1724 follows this voltage at pin 5 of U1714B. Therefore, the collector current of Q1724 (Aux Readout Intensity current) increases from 0 to approximately 0.25 milliampere. Aux Readout Intensity current is subtracted from the Readout Intensity current to reduce the readout intensity current while the MCP output voltage increases. This results in a readout display of constant intensity.

### Anode Voltage Multiplier

Positive accelerating potential for the crt anode is supplied by the five-times voltage multiplier U1700. The voltage applied to the input of U1700 from the high voltage secondary of T1770 is about 2500 volts peak-to-peak. This results in an output voltage of about 12.5 kilovolts at the crt anode. The output resistance of this supply is about 100 megohms and may be subject to meter loading when measured.

## GRID BIAS

The Grid Bias stage provides a dc reference voltage for the Control Grid DC Restorer. This reference level is adjustable by means of CRT Grid Bias adjustment R1746, which sets the grid cutoff voltage of the crt. Te grid cutoff voltage drifts during warmup of the instrument; U1736 and Q1742 compensate for this drift.



http://manoman.sqhill.com

Initially, at instrument turn-on, pin 6 of U1736 is at +7.5 V and pin 2 is slightly negative. This negative voltage at U1736 pin 2 causes pin 6 to try to go positive, which charges capacitor C1736. Transistor Q1742 conducts, making the crt grid bias more positive by the voltage developed across R1747. After 15 minutes, the voltage at TP1736 approaches +13.5 V, which turns off Q1742 and allows Q1748 to control the crt grid bias.

When the instrument is turned off capacitor C1736 discharges with the same time constant (diode CR1736 prevents a fast discharge). If, after a few minutes the instrument is turned on again, less warmup compensation is required.

## -2400 VOLT SUPPLY

Components C1750, CR1762, CR1763, and C1764 form a voltage doubler. A 1250-volt peak square wave is applied to the input of this doubler. If the voltage at the collector of Q1784 is near ground, the dc voltage at TP1844 will be about -2500 volts. Components U1802 and Q1784 regulate the -2400 Volt Supply. Under nominal conditions, the voltage at TP1784 is about +100 volts. Diodes CR1776 and CR1778 alternately clip the waveform at pin 7 of the secondary winding of T1770 between the +100 volt level and ground level. The voltage across the secondary of T1770 is 1250 volts peak. With the waveform at pin 7, the voltage at pin 9 switches between 1250 and -1150 volts. This charges C1750 to 1250 volts and C1764 (at TP1844) to -2400 volts. To maintain equilibrium the average current through C1778 must be zero. During one half of the cycle CR1778 conducts and draws current through C1778; during the other half CR1776 conducts, and CR1778 is turned off. The collector current from Q1784 that flows through C1778 is such that the total average current in C1778 equals zero. The voltage at TP1784 can be pulled down only by Q1784. Zener diode VR1784 limits the voltage at this point to a maximum of 200 volts. This would also happen if transistor Q1784 were removed.

Pin 3 of the operational amplifier U1802 is at ground potential; it is the current summing point. If the current in R1804 and R1806 is zero, pin 3 can be at ground potential only if the current in thick-film high voltage resistor R1802A, R1802B and R1802C is 100 microamperes. This produces a voltage of -2400 volts at TP1844 (100 $\mu$A × 24 Megohms=2400 V). If the voltage at TP1844 is slightly more positive than -2400 volts, pin 3 of U1802 will be above ground, the output (pin 6) will go more positive, Q1784 will turn on harder and conduct more current to charge capacitor C1778 less positive. The voltage at TP1784 will drop and as a result the -2400 Volt Supply will return to -2400 volts dc. Regulation by this path is slow (several cycles of the 25 kilohertz square wave are required to make a correction), and C1786 provides for faster regulation. When Q1784 is turned on hard, current flows through C1786 and pulls down the -2400 Volt Supply.

The -2265 Adjust, R1805, sets the dc high voltage. Divider network R1800, R1803, R1804 and thermistor RT1804 vary the -2400 Volt Supply with changes in temperature. This means that the velocity of the electron beam through the vertical and horizontal crt deflectors changes, which in turn changes the vertical and horizontal deflection sensitivity. The change in deflection sensitivity compensates for gain change with temperature in the vertical and horizontal amplifiers.

A regulated 2400 volt supply (TP1754) is generated for use by the scan expansion lens. The -2400 Volt Supply regulator also regulates the +2400 volt supply, but for slow changes only, as described in the circuit description of the -2400 Volt Supply. Under nominal conditions for the -2400 Volt Supply regulator, the collector of Q1784 is at 100 volts and the voltage at pin 9 of the high voltage transformer (T1770) switches at a 25 kilohertz rate, between 1250 volts and -1150 volts resulting in -2400 volts dc at the output of the -2400 Volt Supply. The voltage at the anode of CR1762 switches between 0 volt and -2400 volts and is the input to the +2400 supply voltage doubler (C1752, CR1752, CR1753, and C1754) causing the output at TP1754 to be +2400 volts dc. The scan expansion lens requires a voltage lower than +2400 volts. Because the lens draws zero current, a resistive divider can be used to lower voltage. Capacitors C1756 and C1880 filter the scan expansion lens voltage.

A voltage doubler produces semi-regulated +105 volts for use by the Z-Axis Amplifier. The input signal to transformer T1770 is connected to the voltage doubler formed by C1770, CR1772, CR1771 and C1774 to generate +105 volts dc at R1771.

If it is overloaded, the +105-volt supply will develop a negative voltage across R1774. If the + or -2400-volt supply is overloaded, a negative voltage will develop across R1776. The Fault Sense line is connected through P1785, pin 8, to the voltage Fault Sense input of U75, in the power supply. This is a high impedance point, and when pin 2 of U75 is pulled 100 millivolts negative or positive, U75 will shut down the power supply. Under overload conditions of the above mentioned supplies, either diode CR1774 or CR1775 will turn on and shut down the power supply.

### High-Voltage Transformer

High-Voltage Transformer T1770 provides pre-regulated voltages for the +2400 volt and -2400 volt high-voltage supplies, and 6.3 volts rms for the crt heater. The crt heater is elevated to the cathode potential through R1848. The high-voltage winding of T1770 also provides the drive to the Anode Voltage Multiplier, Focus-Grid DC Restorer, and the Control-Grid DC Restorer stage.



http://manoman.sghill.com

## GRID CROWBAR

The Grid Crowbar stage prevents the crt grid from becoming more positive than the cathode during turn-on of the instrument. This action is needed to protect the crt cathode while the cathode and grid voltages are settling. The grid voltage is forced more negative than the cathode by connecting the -2400 Volt Supply voltage to the crt grid through VR1688, Q1687, DS1687 and R1688 (while Q1687 is on) which is primarily determined by C1687 and R1687. Initially, C1687 has no charge. When the instrument power is turned on C1687 receives charging current from the -2400 Volt Supply through the emitter-base junction of Q1687 and R1685. Transistor Q1687 remains on as long as the charging current through R1685 is large enough to cause VR1688 to conduct.

## CRT

The R7103 crt is a high resolution, high frequency, micro-channel plate crt. Transformer T1770 has a secondary winding that supplies 6.3 volts to the crt heater. The crt heater is held at the cathode potential through R1848 and DS1848. The conventional oxide structured cathode is held at -2265 volts. The Z-Axis Amplifier provides a maximum of 55 volts unblanking to the grid.

An ion trap is incorporated into the first anode. Gas ions which might normally damage the cathode are drawn from the anode and deposited on a gas absorbing surface. The demagnification lens which works in conjunction with the primary focus lens, is operated at the cathode potential.

Stigmator adjustment R1894 is connected to the stigmator lens and used to adjust the axis of astigmatism for optimum spot symmetry. The primary focus lens is connected to the output of the Focus Grid DC Restorer stage, which contains Focus Preset adjustment R1825. At high voltage Z-Axis drive a focus correction is required. Capacitor C1628 (Auto Focus Stage on diagram 12) couples the focus grid voltage drive to the output of the Auto Focus Amplifier. The front-panel screwdriver adjustment ASTIG (R313) applies a voltage to the astigmatism lens. The front panel astigmatism and focus controls are used together to obtain best overall focus.

The vertical and horizontal deflectors are traveling wave deflectors. They are helical transmission line deflectors where the velocity of the input signal along the helical conductors is the speed of light. The phase velocity along the length of the helix is matched to the crt electron-beam velocity as it propagates along the helix. The impedance of the vertical deflector is 200 ohms, the deflection factor is 1 volt-per-division and the bandwidth is about 3 gigahertz. The deflector is silver plated to minimize skin-effect losses. The impedance of the horizontal deflector is 365 ohms, the deflection factor is 2 volts/division, and the bandwidth is about 1.5 gigahertz. The connections to the vertical and horizontal deflectors are made via carefully spaced neck pins. The vertical deflector also employs stripline lead-in wires between the deflector and the neck pins. Both deflectors use external termination resistors.

The R7103 crt uses a scan expansion lens. Without this lens, the crt would have to be over seven feet in length to obtain the desired scan size and deflector sensitivities. This lens operates as a strong positive lens in the vertical axis and causes the beam to cross over or invert the vertical deflection to produce a vertical scan expansion of 4.5 times. In the horizontal axis the lens is a negative lens, which enhances the deflection of the beam. The horizontal scan is expanded 4 times. Seven potentials are required to operate the lens. The voltages are adjustable, differentially absolutely. The adjustments on diagram 13 are labeled for their primary function, and they have secondary functions.

Vertical Linearity adjustments R1853 and R1856 align the overall vertical linearity of the crt display. Vertical Linearity adjustments R1854 and R1855 correct any vertical imbalance. Geometry adjustments R1863 and R1866 set the crt vertical geometry. Vertical Keystone adjustments R1864 and R1865 align the vertical keystone effect of the crt. Horizontal Sensitivity adjustments R1873 and R1876 set the horizontal deflection factor. Horizontal Linearity adjustments R1874 and R1875 are set to minimize horizontal nonlinearity or nonuniform bowing of vertical lines.

The input of the microchannel plate (MCP) is held at ground potential and the output is connected to a variable positive supply to provide bias for the MCP. The higher the bias across the MCP, the higher the gain or electron multiplication. The MCP is the basis for the R7103's high writing rate.

The MCP bias is adjusted with the INTENSITY control. The bias across the MCP is held constant at INTENSITY settings below about midrange, but increases linearly from midrange to the fully clockwise position. Adjustment R1720 (MCP Gain) on the High Voltage Board also adjusts the MCP output voltage. At the factory this adjustment is set to achieve a photographic writing speed of 20 cm/nanosecond using a standard camera (f 1.9 lens) and standard film (Polaroid Type 107; 3000 ASA).

If the MCP output voltage adjustment is set high the visual and photographic writing speeds will increase, however, on photographs a background scintillation may appear. At a high MCP bias setting, the channels being excited by stray electrons can have an electron-multiplication factor high enough to become visible on photographs. Depending on instrument use, increased



http://manoman.sqhill.com

MCP output voltage may reduce the display gain. Refer to Reduction of Display Gain With Display Output Charge in the Operating Instructions section of this manual. The MCP is located about 0.3 cm from an aluminized screen with standard P31 phosphor crt's. About 11.5 kilovolts is applied across this gap to accelerate the electrons exiting the MCP.

The orthogonality coil, wound on the crt neck at the exit of the vertical deflector, allows for correction of rotational alignment errors between the deflection axis and scan expansion lens. In addition to the orthogonality coil, a trace rotation coil is wound on the envelope of the glass ceramic interface.

## 14 CONVERTER/RECTIFIERS

The Converter/Rectifiers circuit provides the operating power for the R7103 from an ac line-voltage source. This circuit includes a LINE VOLTAGE SELECTOR located on the rear panel. Figure 3-25 shows a detailed block diagram of the Converter/Rectifiers circuit. Diagram 14, in Section 8 (Diagrams and Circuit Board Illustrations) of this manual, is a schematic of the Converter/Rectifier circuit. Gray shaded lines divide the circuitry into major stages. Sub-headings in the following discussion use the stage names to further identify portions of the circuitry on diagram 14.

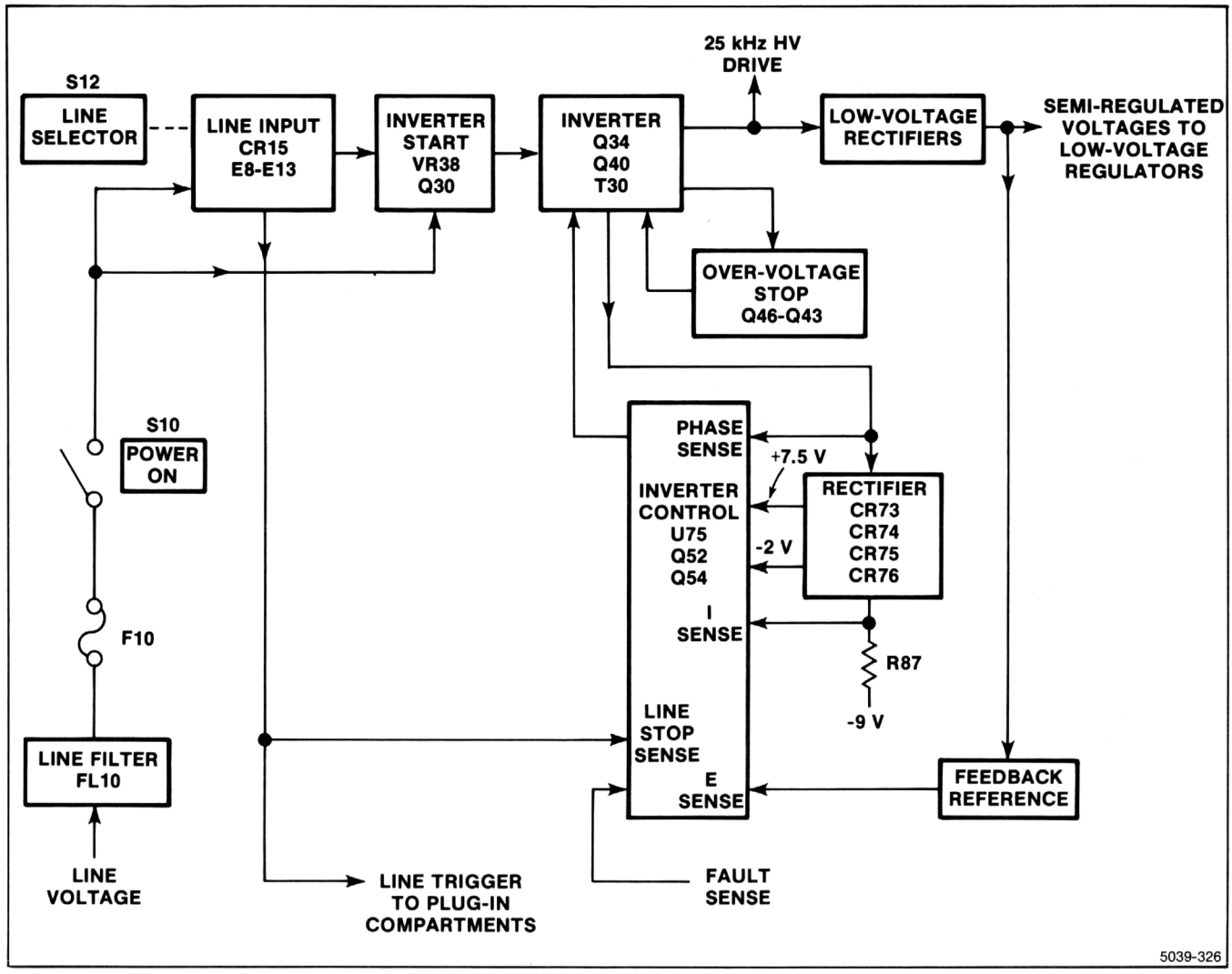


**Figure 3-25. Detailed block diagram of Converter/Rectifier circuit.**



http://manoman.sqhill.com

## LINE INPUT

Power is applied through line filter FL10, line fuse F10 and POWER switch S10. The line filter keeps power-line interference from entering the instrument, and keeps the approximate 25-kilohertz Inverter signal from entering the power line. Components R5, C5, and C6 suppress reverse-recovery transients of CR15.

The LINE VOLTAGE SELECTOR, S12, allows the R7103 to operate from a 115- or 230-volt nominal line voltage source. In the 115-volt position, rectifier CR15 operates as a full-wave doubler with energy-storage capacitors C16 and C17, so the voltage across the two capacitors in series will be the approximate peak-to-peak value of the line voltage. For 230-volt operation, CR15 is connected as a bridge rectifier, and the voltage across C16 and C17 will be the approximate peak value of the line voltage. Thus, the dc voltage applied to the Inverter stage is about the same for either 115- or 230-volt operation.

Thermistors RT12 and RT13 limit the surge current when the power supply is first turned on. After the instrument is in operation, the resistance of the thermistors decreases so that they have little effect on the circuit. When the instrument is turned off, the Inverter Control stage turns off the Inverter, which prevents it from discharging C16 and C17; C16 and C17 discharge slowly through R21 to allow for thermistor thermal-recovery time. This ensures sufficient thermistor resistance to limit the turn-on surge current to a safe level. Because C16 and C17 discharge slowly, dangerous potentials exist in the power supply for several minutes after the POWER switch is turned OFF. The presence of voltage in the circuit is indicated by the relaxation oscillator R19, C19 and DS19. Neon bulb DS19 will blink until the potential across C16 and C17 drops to about 80 volts.

Spark-gap electrodes E8 and E13 are surge-voltage protectors. When the LINE VOLTAGE SELECTOR is in the 115-volt position, only E8 is connected across the line input. If a peak voltage greater than 230 volts is present on the line, E8 will conduct and quickly open line fuse F10 to interrupt the input power before the instrument can be damaged. In the 230 volt position, E8 and E13 are connected in series across the line input to provide protection for peak voltages greater than 460 volts.

Transformer T8 provides a sample of the line voltage to the plug-in connectors for triggering at line frequencies. This line frequency signal is also connected to the Inverter Control stage to sense when line voltage is present.

## INVERTER START NETWORK

Components R10 and C42 provide a turn-on path between the input line and the negative side of line-input filter capacitor C17. Capacitor C42 charges on each cycle of the input line voltage. When the charge on C42 reaches about 33 volts, Zener diode VR38 turns on, which causes Q30, the programmable unijunction transistor, to fire. This provides base drive to turn on Q40 through C39. When Q40 turns on, it shock-excites series-resonant network L37 and C37 to generate a damped oscillation. This damped oscillation provides the drive necessary to start the Inverter switching action. After the Inverter is operating, the recurrent waveform at the collector of Q40 keeps C42 discharged through CR49, thus disabling the Inverter Start network while the instrument is on.

## INVERTER

The Inverter stage converts the dc voltage across C16 and C17 to a sine-wave current to drive power transformer T110. Once the Inverter has been started by the Inverter Start Network, transformer T30 provides feedback to the bases of Q34 and Q40 to sustain oscillation. These transistors operate at a forced beta of 4 due to the turns ratio of T30. Also, T30 provides a 60:1 turn ratio center-tapped winding for pre-regulation and fault protection shut-down. The Inverter Control stage short circuits one-half of this winding to either delay the turn-on of Q34 and Q40 or to stop their switching action.

The switching action of Q34 and Q40 generates a square-wave voltage with an amplitude approximately equal to the dc voltage at the input to this stage. The square-wave voltage at the emitter of Q34 supplies the drive necessary to maintain a sine-wave current in the series-resonant network of L37 and C37. Diodes CR34 and CR41 provide paths for series-resonant current when Q34 and Q40 are held off for pre-regulation.

To aid in understanding circuit operation, Figure 3-26A shows a representation of the Inverter stage as a switch. The three possible states of the Inverter are depicted by the three possible switch positions: Q34 is on in position (a); Q40 is on in position (c); or both transistors are off, for pre-regulation, in position (b). In the composite current waveform of Figure 3-26B, the relative phase and amplitude of each component of $I_T$ is shown for periods $T_a$, $T_b$, and $T_c$ corresponding to the three switch positions. Figure 3-26C and Figure 3-26D show the relationship of the Inverter voltage and primary winding voltages with respect to the current waveform.

The normal sequence of operation is as follows: assume that the voltage at point X is more positive than the negative supply voltage and that Q40 has just turned on. The current labeled $I_4$ in Figures 3-26A and 3-26B flows as the voltage at point W goes negative. Point X goes toward the negative supply voltage as C37 charges through L37. The voltage across the primaries of T110 and T35 at point Y produces a voltage at the secondary of T35 that is sensed by the Inverter Control IC, U75



http://manoman.sqhill.com

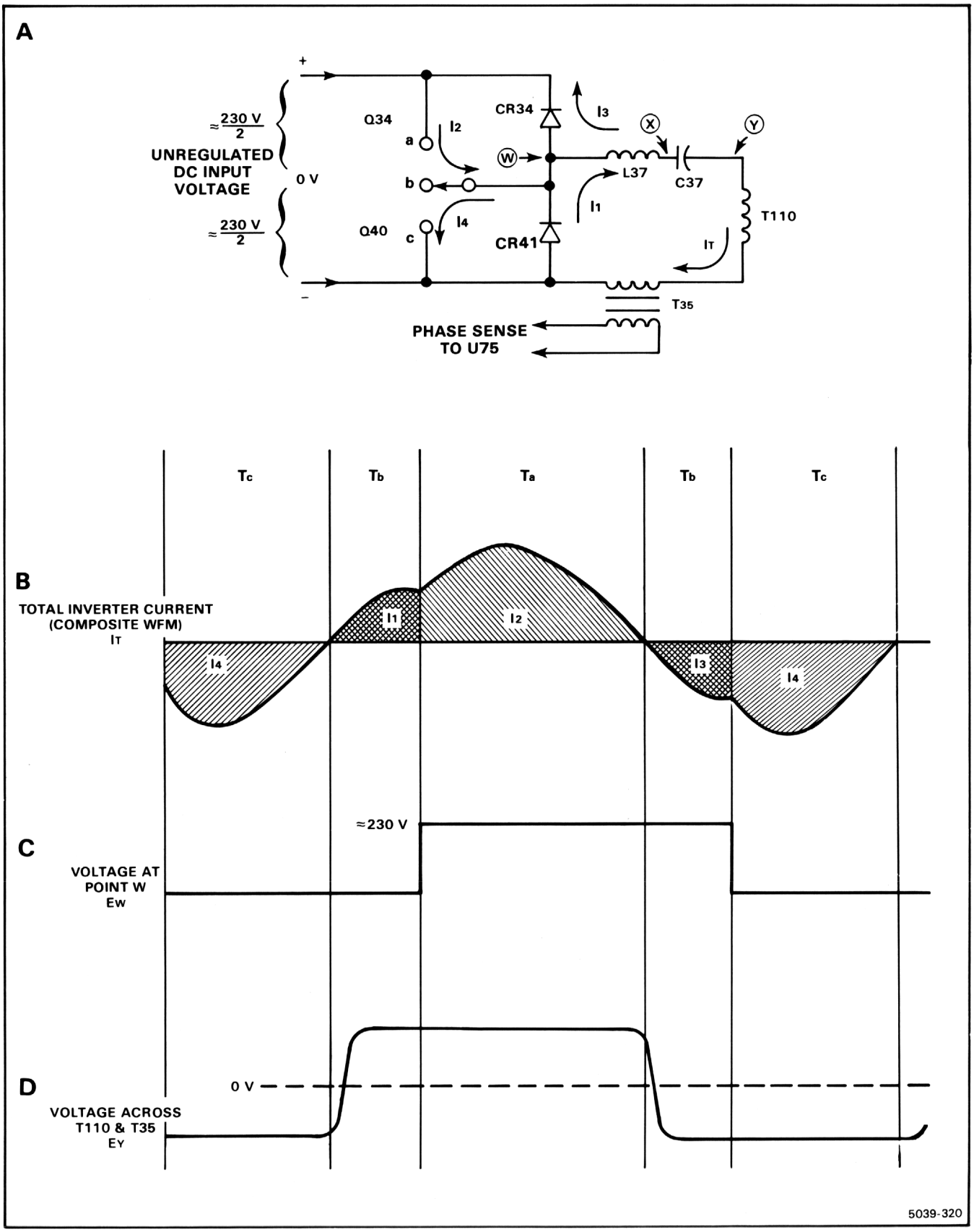


**Figure 3-26. (A) Representation of Inverter stage. Idealized waveforms of (B) total Inverter current, $I_T$, (C) Voltage across CR41 and (D) Voltage across primaries of T110 and T35.**



http://manoman.sqhill.com

(see Fig. 3-26D). When this voltage changes phase from negative to positive, Q40 is held off (turned off) by U75. Due to the inductive action of L37, current continues to flow through the Inverter circuit, pulling the voltage at point W below the negative supply voltage. This forward-biases CR41, which now conducts $I_1$ (Figures 3-26A and 3-26B). After a predetermined time, the Inverter Control IC, U75, allows Q34 to turn on and conduct the current labeled $I_2$. Now that Q34 is conducting, the voltage at point X charges toward the positive supply voltage through L37. Again, voltage phase change is sensed at the secondary of T35, by U75, as previously described. Transistor Q34 is held off at this time, and $I_3$ flows because the inductive action of L37 pulls the anode of CR34 to a voltage greater than the positive supply voltage. After a time set by the Inverter Control stage, Q40 conducts $I_4$, and the cycle repeats.

## OVER-VOLTAGE STOP

Whenever the voltage across the primary of T110 exceeds a safe level, the Over-Voltage Stop stage shuts down the Inverter to protect Inverter components from damage. For example, this stage activates whenever the normal voltage regulating path through Q52 and T30 is inoperative.

Capacitor C43 charges through R44 and CR38 to the peak voltage across the primary of T110. If this voltage exceeds a safe level, Q45 conducts to cause Q43 and Q46 to turn on. When Q46 turns on, the base-drive winding of T30 is short-circuited, which stops the Inverter. Because Q43 is turned on, C42 (in the Inverter Start network) is prevented from charging and from firing Q30; this prevents the Inverter from starting. Transistors Q45 and Q43 continue to conduct until C43 has discharged sufficiently, through R45, to turn Q45 off. At this point, Q43 and Q46 will turn off and the Inverter will start on the next positive half cycle of the line.

## INVERTER CONTROL

The Inverter Control stage, which is principally U75, provides pre-regulation and fault protection functions. For pre-regulation purposes, U75 varies the hold-off time ($T_b$, in Fig. 3-26B) of the Inverter switching transistors.

Under normal operating conditions, only the voltage sense (E Sense) input at pin 15 controls the hold-off time. However, various fault conditions can affect hold-off time or stop the Inverter operation altogether. The operation of individual functions of the Inverter Control stage is described in the following discussion.

### Pre-Regulator

The pre-regulator operation of U75 maintains constant voltage at the outputs of the Low-Voltage Rectifiers stage. It also provides constant peak-to-peak voltage to the High-Voltage Power Supply in the CRT Circuit (diagram 13).

Transformer T35 provides Inverter phase information and power to U75. The phase information is connected to pins 10 and 11 through C77 and C78. Bridge rectifier CR73, CR74, CR75 and CR76, provides positive and negative operating voltages to U75. A shunt regulator in U75 maintains the +7.5 volts at pin 6. The -2 volt (nominal) supply connected to pin 7 is unregulated. Zener diode VR72 provides protection against open circuit conduction (if U75 is removed) and normally does not conduct.

Pin 15 is the voltage sensing (E Sense) point of the pre-regulator circuit. Zero volts at pin 15 indicates proper regulation. Zener diode VR88 provides a stable reference voltage for sensing resistors R93, R95, R86 and R87. Variable resistor R93, in this divider, adjusts the ratio of the divider to adjust the output of the +108 volt supply. Outputs of the other supplies are determined by the turns ratio of T110.

Integrated circuit U75 regulates the Inverter by varying the hold-off time of the switching transistors, Q34 and Q40. A variable pulse-width monostable multivibrator in U75 is triggered at pins 10 and 11 whenever the Inverter current changes direction. The pulse width holds off the Inverter by turning on Q52 through pin 9 of U75, thus shorting out the base drive to Q34 and Q40. The pulse width, and therefore holdoff, is controlled by a ramp at U75 pin 12. If the voltage at the E Sense input, pin 15, is too low, the ramp is not allowed to rise very high and the pulse width and holdoff are short. As the E Sense voltage rises, the ramp is allowed to rise to a higher voltage level, increasing the holdoff time.

### Fault Protection

The fault protection portions of U75 provide protection for the power supply components due to short circuits, turn-on surge currents, and other malfunctions. When a fault is detected at the Fault Sense input (pin 2) or I Sense input (pin 13), a current from the Fault Holdoff Time output (pin 1) charges C64. If the detected fault lasts longer than about 10 milliseconds, C64 will charge positive enough to initiate a positive output at pin 8. This output turns on Q54 and Q52, which turns off the Inverter. The Inverter will remain off while C54 discharges through R54, keeping Q54 and Q52 turned on. The Inverter restarts in roughly 500 milliseconds when the current through R54 is insufficient to keep Q54 and Q52 turned on. When the inverter restarts, C54 is recharged through CR59 and R59. This cycle repeats until the fault is corrected, with the Inverter on for about 10 milliseconds, and off for about 500 milliseconds.

### Inverter Current Limiter

The inverter current limiter protects the Inverter components from damage due to excessive current or



http://manoman.sqhill.com

short circuits. Operation of this stage is similar to the pre-regulator (voltage regulation). The inverter current limiter takes control of the Inverter hold-off time whenever pin 13 starts to go negative. Transformer T35 provides a current step-down. The current is rectified and flows through R84, the current-sensing resistor. The voltage across R84 is negative and proportional to the Inverter current. The I Sense input at pin 13 U75 is normally held positive through divider R81, R82 and R83. The Inverter Current Limiter takes control of regulation when pin 13 reaches near zero volts. Peak Inverter current is limited to about 5 amperes. If the voltage at pin 13 remains near zero for more than about 10 milliseconds, pin 8 will go positive to turn off the Inverter.

### Fault Sense

The fault sense portion of U75 provides overload protection for supplies on the Low-Voltage Regulators schematic (diagram 15), and other supplies throughout the instrument. Resistive networks from supplies are connected to the Fault Sense input at pin 2 of U75. During normal operation, the voltage at the Fault Sense input remains near zero. If one of the inputs changes sufficiently to cause this voltage level to vary 200 millivolts (positive or negative) for more than 10 milliseconds, a positive output at pin 8 of U75 stops the Inverter.

### Line Stop

The line stop portion of U75 stops the Inverter when the POWER switch, on the front panel, is turned OFF. The Line Stop stage will also stop the Inverter if the ac line voltage falls below a minimum value.

The line-frequency signal from transformer T8 is connected to pin 4, the Line Stop Sense input of U75. During normal operation, the line-frequency signal causes the Line Stop Timer terminal (pin 3) to periodically discharge to ground. When the line-frequency signal is interrupted or falls below a minimum value, C67 will charge to approximately +0.7 volts causing the Line Stop stage to produce a positive output at pin 8 of U75 which stops the Inverter.

## LOW-VOLTAGE RECTIFIERS

The Low-Voltage Rectifiers stage rectifies the square-wave ac voltages from T110 to the dc levels used for all regulated supplies in this instrument.




# LOW-VOLTAGE REGULATORS

The Low-Voltage Regulators convert semi-regulated voltages from the Converter/Rectifiers circuit (diagram 14) to stabilized low-ripple output voltages. The regulators are series type, using the +50 volt supply as a reference.

A schematic diagram of the Low-Voltage Regulators circuit is shown on diagram 15, in Section 8, Diagrams and Circuit Board Illustrations. Gray shaded lines divide the circuitry into major stages. Subheadings in the following discussion use these stage names to further identify the components and portions of the circuitry shown on diagram 15.

**Operational Amplifier Power Supplies.** The operational amplifiers used to regulate the +50, +15, +5, -50, and -15 volt supplies require that four special voltages be generated for their operation:

1. The +22 volt supply is generated from the semi-regulated +54 volt supply by reference zener diode VR32 and Q34.

2. The -22 volt supply is generated from the semi-regulated -54 volt supply by reference zener diode VR36 and Q38.

3. The +5.6 volt supply is generated from the semi-regulated +17 volt supply by zener diode VR152.

4. The -5.6 volt supply is generated from the semi-regulated -17 volt supply by zener diode VR156.

## +50 V REGULATOR

Semi-regulated +54 volts from the Converter/Rectifiers circuit (diagram 14) is the unregulated voltage source for this supply. Differential amplifier U15 compares the feedback voltage at pin 2 against the reference voltage at pin 3. The error output at pin 6 of U15 reflects a difference between these two inputs. Zener diode VR12 sets a reference level of about +9 volts at U15 pin 3. A sample of the +50-volt output is connected to U15 pin 2 via divider network R16, R15 and R14. Variable resistor R15 in this divider sets the output level of this supply. Notice that the feedback voltage of this divider is obtained from a line labeled +50 VS (sense). If the feedback voltages were obtained at the supply, the voltage at the load would not stay constant, due to the resistance of the interconnecting cable between the supply and its load. The sense configuration overcomes this problem by sensing the voltage at the load. Because the current in the sense line is small and constant, the load voltage is held constant regardless of the load current.

Regulation of voltage occurs as follows: If the +50 V output decreases (becomes less positive) due to an increase in load or a decrease in input voltage (as a result of line-voltage change or ripple), the voltage across divider R16, R15 and R14 decreases also. This



http://manoman.sqhill.com

results in a less positive level, at pin 2 of U15, than that established by zener diode VR12 at pin 3 of U15. This decreases the current through CR15 and VR17 causing an increase in current through the base-emitter junction of Q28. This results in increased conduction of Q28, the +50 volt series regulator. The load current increases, therefore the voltage across the load also increases (becomes more positive) sufficiently to balance the input into differential amplifier U15. The +50 V Adj, R15, sets the output level of this supply.

Current limiting is provided for the +50 volt supply if excessive current is demanded from the supply. All current from the +50 volt supply must flow through R28. Under normal operation, there is insufficient voltage drop across R28 to turn Q22 off. However, when excessive current is demanded from the +50 volt series regulator (Q28) due to a short circuit or similar malfunction at the output of this supply, the voltage drop across R28 increases and begins to turn off Q22. The reduced collector current of Q22 results in a reduction of current through Q28. This current-limiting protects Q28 from damage due to excessive power dissipation.

Several protection diodes are also included in this circuit. Diode CR28 prevents the output of this supply from going more negative than about -0.6 volt if it is shorted to a negative supply. Zener diode VR10 and diode CR10 supply a turn-on voltage for U15 to start the +50 volt supply when the instrument is first turned on. As soon as the +50 volt supply turns on, CR10 stops conducting.

### -15 V REGULATOR

Basic operation of all stages in the -15 Regulator is the same as for the +50 Regulator. The reference level for this supply is established through R82 at pin 5 of U84B. The divider ratio of R80 and R81 sets a level of zero volts at pin 6 of U84B. The level on the +50 VS (sense) line is held stable by the +50 volt supply. Any change at the output of the -15 volt supply appears at pin 6 of U84B as an error signal. The output voltage is regulated in the same manner as described for the +50 volt supply. Diode CR96 keeps the output of this supply from going more positive than about +0.6 volt if it is shorted to one of the more positive supplies. Operational amplifier U84A provides current limiting for Q94 by monitoring the voltage drop across R95. When too much current is demanded from the supply, the increased voltage drop across R95 allows U84A to turn Q88 off, reducing the current through Q94.

### +5 V REGULATOR

The operation of the +5 V Regulator is basically the same as described for the previous supply regulators. Error voltage is provided through R131 to pin 2 of U114A, and pin 3 is referenced to the +50 VS (sense) line. The divider ratio of R113 and R114 is 10:1, so pin 3 of U114A is at +5 volts when the supply is operating normally. The level on the +50 V Sense line is held stable by the +50 volt supply. Therefore, any change at the output of the +5 volt supply appears at pin 2 of U114A as an error signal. The output voltage is regulated in the manner described previously for the +50 volt supply. Diode CR132 limits the output of this supply to about -0.6 volt, if it is shorted to one of the negative supplies.

The +5 volt current limiting, accomplished by U114B, protects the supply from excessive output current damage. With normal supply current through R133 and R134, the voltage drop across this parallel resistance biases Q118 on. If the current through R133 and R134 increases above a safe level, pin 7 of U114B reduces the forward bias current to Q118. Now, the base current of Q122 is reduced which decreases the voltage on the base of Q126. This limits the conduction of Q126 to a safe current level.

### +15 V REGULATOR

The +15 V Regulator regulates in the same manner as the +50 volt supply; current limiting operates in the manner described for the +5 volt supply. Error feedback voltage to pin 2 of U64A is provided through R69. Pin 3 of U64A is referenced to the +50 VS (sense) line. The divider ratio of R61 and R62 sets pin 3 of U64A at +15 volts. Any change in the output level of the +15 volt supply appears at pin 2 of U64A as an error signal. This results in an opposite change at the output, pin 1 of U64A, which is conveyed to the +15 volt series regulator transistor Q74, through CR64 and Q68, to correct the error in the output voltage of the supply. Diode CR76 limits the output of this supply to about -0.6 volt if it is shorted to one of the negative supplies.

### -50 V REGULATOR

The -50 V Regulator operates basically the same as the +50 volt supply; current limiting operates in a manner similar to that described for the +50 volt supply. Error voltage to pin 2 of U45 is provided by divider R45-R46 and is referenced to the -50 VS (sense) line. The divider ratio of R45 and R46 sets the level at pin 2 of U45 at zero volts when the output of this supply is correct. Protection diode CR58 limits the output voltage of this supply to +0.6 volt should the supply be shorted to a positive supply.

### GRATICULE LIGHT SUPPLY

The Graticule Light Supply provides power for the graticule lights. The front-panel GRAT ILLUM potentiometer controls the output of this supply to set the brightness of the graticule lights. Transistors Q144, Q148 and diode CR148 form a voltage-following current



http://manoman.sqhill.com

buffer. The output voltage at the collector of Q148 follows the voltage set at the base of Q144 by the divider made up of R142, R141, R143 and the front-panel GRAT ILLUM control on diagram 7. Resistor R148 limits the output current from this supply to protect Q148 from damage due to a short circuit.



http://manoman.sqhill.com

# MAINTENANCE

This section of the manual contains information for performing preventive maintenance, troubleshooting, and corrective maintenance for the R7103 Oscilloscope.

# PREVENTIVE MAINTENANCE

Preventive maintenance, performed regularly, can prevent instrument breakdown and may improve the reliability of the instrument. The severity of the environment to which the instrument is subjected will determine the frequency of maintenance. A convenient time to perform preventive maintenance is preceding electrical adjustment of the instrument.

## CABINET PANEL REMOVAL

**WARNING**

*Dangerous potentials exist at several points throughout this instrument. When the instrument is operated with the covers removed, do not touch exposed connections or components. Some transistors have voltages present on their cases. Disconnect power before cleaning the instrument or replacing parts.*

The top and bottom cabinet panels provide protection from operating potentials present within the instrument. In addition, they reduce radiation of electromagnetic interference from the instrument. Screws retain the cabinet panels. To remove the panels, remove the screws and lift the panels off. Operate the instrument with the panels in place to protect the interior from dust.

## CLEANING

The R7103 should be cleaned as often as operating conditions require. Accumulation of dirt in the instrument can cause overheating and component breakdown. Dirt on components acts as an insulating blanket and prevents efficient heat dissipation. It also provides an electrical conduction path which may result in instrument failure. The side panels reduce the amount of dust reaching the interior of the instrument. Operation without the panels in place necessitates more frequent cleaning.

**CAUTION**

*Avoid the use of chemical cleaning agents which might damage the plastics used in this instrument. Exercise care when cleaning Hypcon connectors; see cleaning instructions under Hypcon Connectors in this section. Use a nonresidue type of cleaner, preferably isopropyl alcohol or totally denatured ethyl alcohol. Before using any other type of cleaner, consult your Tektronix Service Center or representative.*

### EXTERIOR

Loose dust accumulated on the outside of the instrument can be removed with a soft cloth or small brush. The brush is also useful for dislodging dirt on and around the front-panel controls. Dirt which remains can be removed with a soft cloth dampened in a mild detergent and water solution. Do not use abrasive cleaners.

### CRT

Clean the plastic light filter, implosion shield, and the crt faceplate with a soft, lint-free cloth dampened with denatured alcohol.

The crt mesh filter can be cleaned as follows:

1. Hold the mesh filter in a vertical position and brush it lightly with a soft, No. 7 water-color brush to remove light coatings of dust or lint.

2. Greasy residues, or dried-on dirt, can be removed with a solution of warm water and a neutral-pH



http://manoman.sqhill.com

liquid detergent. Use the brush to lightly scrub the filter.

3. Rinse the filter thoroughly in clean water and allow it to air dry.

4. If any lint or dirt remains, use clean low-pressure air to remove it. Do not use tweezers or other hard cleaning tools on the filter, as the special finish may be damaged.

5. When not in use, store the mesh filter in a lint-free dust-proof container, such as a plastic bag.

### INTERIOR

Cleaning the interior of the instrument should only be occasionally necessary. The best way to clean the interior is to blow off the accumulated dust with dry, low-velocity air (approximately 5 lb/in$^2$. Remove any dirt which remains with a soft brush or a cloth dampened with a mild detergent and water solution. A cotton-tipped applicator is useful for cleaning in narrow spaces, or for cleaning more delicate circuit components.

**CAUTION**

*Circuit boards and components must be dry before applying power to prevent damage from electrical arcing.*

The high-voltage circuits should receive special attention. Excessive dirt in this area may cause high-voltage arcing and result in improper instrument operation.

## VISUAL INSPECTION

The R7103 should be inspected occasionally for such defects as broken connections, improperly seated semiconductors, damaged or improperly installed circuit boards, and heat-damaged parts. The corrective procedure for most visible defects is obvious; however, particular care must be taken if heat-damaged parts are found. Overheating usually indicates other trouble in the instrument; therefore, correcting the cause of overheating is important to prevent recurrence of the damage.

## SEMICONDUCTOR CHECKS

Periodic checks of semiconductors are not recommended. The best check of semiconductor performance is actual operation in the instrument. More details on semiconductors are given under Troubleshooting later in this section.

## PERIODIC ELECTRICAL ADJUSTMENT

To ensure accurate measurements, check the electrical adjustment of this instrument after each 1000 hours of operation, or every six months if used infrequently. In addition, replacement of components may necessitate adjustment of the affected circuits. Complete adjustment instructions are given in Section 5, Checks and Adjustment. This procedure can be helpful in localizing certain troubles in the instrument, and in some cases, may correct them.



http://manoman.sqhill.com

# TROUBLESHOOTING

The following information is provided to facilitate troubleshooting of the R7103 Oscilloscope. Information in other sections of this manual should be used with the following data to aid in locating a defective component. An understanding of the circuit operation is helpful in locating troubles. See Section 3, Theory of Operation, for this information.

## TROUBLESHOOTING AIDS

### DIAGRAMS

Complete schematic diagrams are given on the pullout pages in Section 8, Diagrams and Circuit Board Illustrations. The component numbers and electrical values of all components in this instrument are shown on these diagrams. (See the first page of the Diagrams and Circuit Board Illustrations section for definitions of the reference designators and symbols used to identify components in this instrument.) Important voltages and numbered waveform test points are also shown on the diagrams. Important waveforms, and the numbered test points where they were obtained, are located adjacent to each diagram. The portions of circuits mounted on circuit boards are enclosed with heavy, solid-black lines.

### CIRCUIT BOARD ILLUSTRATIONS

To aid in locating circuit boards, a circuit board location illustration appears on the back of the pullout page facing the schematic diagram. In addition, an illustration of the circuit board(s) is included here, with the physical location of the components and waveform test points that appear on the schematic diagram identified. Each circuit board illustration is arranged in a grid locator with an index to facilitate rapid location of components contained in the schematic diagrams.

### TROUBLESHOOTING CHART (also see p.7)

A troubleshooting chart is given in Section 8, Diagrams and Circuit Board Illustrations to aid in locating a defective circuit. The shaded blocks on the Troubleshooting Chart indicate circuit(s) that may cause the indicated malfunction. The circuits listed are discussed in detail in Section 3, Theory of Operation.

### ADJUSTMENT AND TEST POINT LOCATIONS

To aid in locating test points and adjustable components called out in the various sections of the Checks and Adjustment procedures, the Adjustment and Test Point Locations pullout pages are provided in Section 8, Diagrams and Circuit Board Illustrations.

### COMPONENT COLOR CODING

The instrument contains brown composition resistors, some metal-film resistors, and some wire-wound resistors. The resistance values of wire-wound resistors are usually printed on the component body. The resistance values of composition resistors and metal-film resistors are color coded on the components using the EIA color code (some metal-film resistors may have the value printed on the body). The color code is read starting with the stripe nearest the end of the resistor. Composition resistors have four stripes, which consist of two significant figures, a multiplier, and a tolerance value (see Fig. 4-1). Metal-film resistors have five stripes consisting of three significant figures, a multiplier, and a tolerance value.

The values of common disc capacitors and small electrolytics are marked on the side of the component body.

The cathode end of glass-encased diodes is indicated by a stripe, a series of stripes, or a dot. The cathode and anode ends of metal-encased diodes can be identified by the diode symbol marked on the body.

### SEMICONDUCTOR LEAD CONFIGURATIONS

Lead configurations for semiconductor devices used in the R7103 Oscilloscope are shown in Figure 4-2.

### MULTI-PIN CONNECTORS

Pin 1 on multi-pin connectors is designated with a triangle. A triangle, dot or square printed on circuit boards denotes pin 1. When a connection is made to a circuit board, the orientation of the triangle on the multi-pin holder is determined by the index (triangle, dot or square) printed on the circuit board (see Fig. 4-3). Some multi-pin connectors are keyed with a plastic pin that protrudes through a hole on the circuit board. Proper mating with the multi-pin connector and the pin(s) on the circuit board cannot be accomplished unless this pin is aligned with the hole on the circuit board.

Some multi-pin connectors are equipped with a locking mechanism to more readily secure the connector to the circuit board. To remove these connectors, grasp the connector body and pull perpendicular to the circuit board. They should not be removed by pulling on the wire leads; this causes the locking mechanism to clamp onto the circuit board pins.



http://manoman.sqhill.com

## COLOR CODE

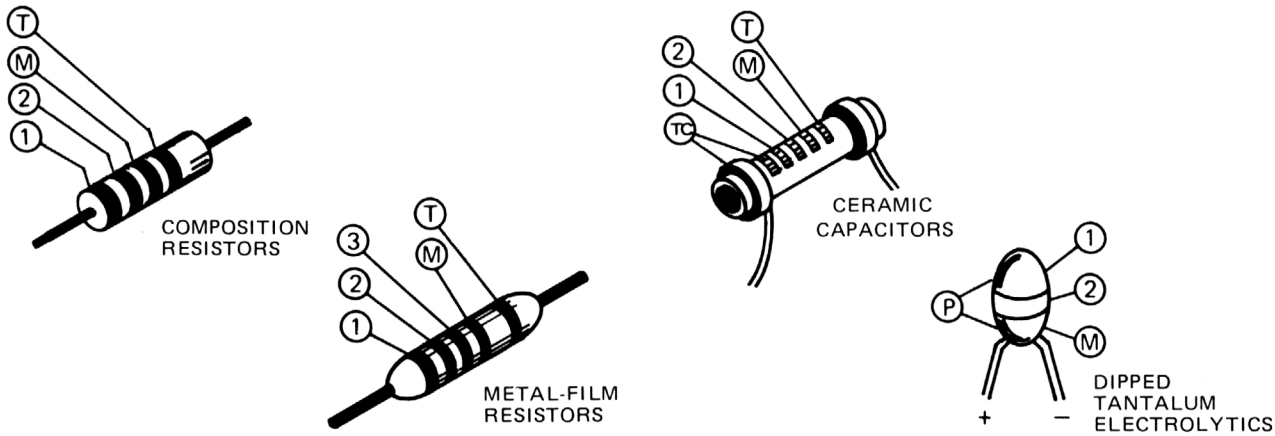


① ② and ③ - 1ST, 2ND, AND 3RD SIGNIFICANT FIGS.
Ⓜ - MULTIPLIER Ⓣ - TOLERANCE;
Ⓣ AND/OR Ⓒ COLOR CODE MAY NOT BE PRESENT ON SOME CAPACITORS;
Ⓒ - TEMPERATURE COEFFICIENT.
Ⓟ - POLARITY AND VOLTAGE RATING

| COLOR | SIGNIFICANT FIGURES | RESISTORS | | CAPACITORS | | | DIPPED TANTALUM VOLTAGE RATING |
|---|---|---|---|---|---|---|---|
| | | MULTIPLIER (OHMS) | TOLERANCE | MULTIPLIER (pF) | TOLERANCE | | |
| | | | | | OVER 10pF | UNDER 10pF | |
| BLACK | 0 | 1 | --- | 1 | ±20% | ± 2pF | 4VDC |
| BROWN | 1 | 10 | ±1% | 10 | ±1% | ±0.1pF | 6VDC |
| RED | 2 | $10^2$ or 100 | ±2% | $10^2$or 100 | ±2% | --- | 10VDC |
| ORANGE | 3 | $10^3$or 1 K | ±3% | $10^3$ or 1000 | ±3% | --- | 15VDC |
| YELLOW | 4 | $10^4$ or 10K | ±4% | $10^4$ or 10,000 | +100% −0% | --- | 20VDC |
| GREEN | 5 | $10^5$ or 100 K | ±1/2% | $10^5$or 100,000 | ±5% | ±0.5pF | 25VDC |
| BLUE | 6 | $10^6$ or 1 M | ±1/4% | $10^6$ or 1,000,000 | --- | --- | 35VDC |
| VIOLET | 7 | --- | ±1/10% | $10^7$ or 10,000,000 | --- | --- | 50VDC |
| GRAY | 8 | --- | --- | $10^{-2}$ or 0.01 | +80% −20% | ±0.25pF | --- |
| WHITE | 9 | --- | --- | $10^{-1}$ or 0.1 | ±10% | ±1pF | 3VDC |
| GOLD | --- | $10^{-1}$ or 0.1 | ±5% | --- | --- | --- | --- |
| SILVER | --- | $10^{-2}$ or 0.01 | ±10% | --- | --- | --- | --- |
| NONE | --- | --- | ±20% | --- | ±10% | ±1pF | --- |

5039-401

**Figure 4-1. Color codes for resistors and capacitors.**



http://manoman.sqhill.com

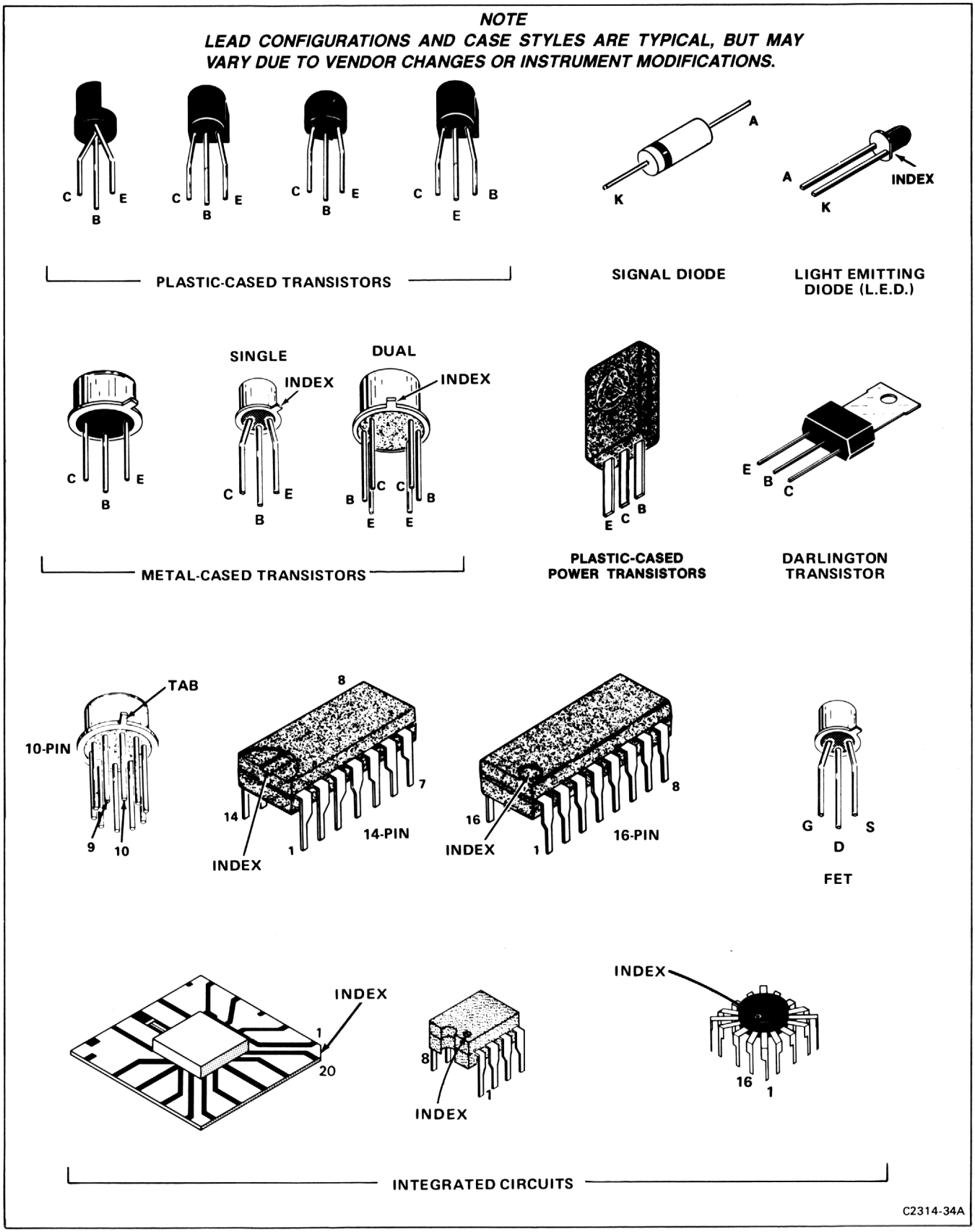


**Figure 4-2. Semiconductor lead configurations.**



http://manoman.sqhill.com

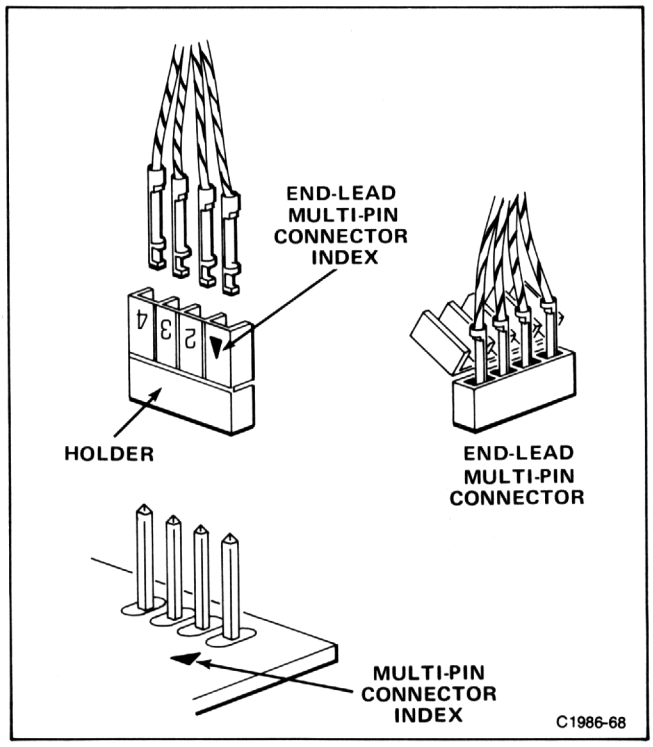


**Figure 4-3. Orientation of multi-pin connectors.**

## TROUBLESHOOTING EQUIPMENT

The following equipment is useful for troubleshooting the 7103 Oscilloscope mainframe:

1. Transistor Tester

**Description:** Dynamic-type tester.

**Purpose:** Test semiconductors.

**Recommended type:** TEKTRONIX 577/177 Curve Tracer, TEKTRONIX 576 Curve Tracer, 7CT1N Curve Tracer plug-in unit and a 7000-series oscilloscope system, or a 5CT1N Curve Tracer plug-in unit and a 5000-series oscilloscope system.

2. Digital Multimeter

**Description:** 10 megohm input impedance and 0 to 1 kilovolt range, ac and dc; ohmmeter, accuracy, within 0.1%. Test probes must be insulated to prevent accidental shorting.

**Purpose:** Check voltages and resistances.

**Recommended type:** TEKTRONIX DM 501A Digital Multimeter.

3. Test Oscilloscope

**Description:** Frequency response, dc to 100 megahertz minimum; deflection factor, 5 millivolts to 5 volts/division and 1 milliampere to 1 ampere/division. A 10X, 10-megohm voltage probe should be used to reduce circuit loading for voltage measurements. For current waveforms, use a Tektronix P6021 Current Probe with passive termination, or the equivalent.

**Purpose:** Check operating waveforms.

**Recommended type:** Refer to the Tektronix Products catalog for applicable oscilloscope system.

4. Variable Autotransformer

**Description:** Output variable from 0 to 140 volts, 10 amperes minimum rating. Must have three-wire power cord, plug, and receptacle.

**Purpose:** Vary input line voltage when troubleshooting the power supply.

**Recommended type:** General Radio W10MT3W Variac Autotransformer.

5. Isolation Transformer

**Description:** 1:1 turns ratio, 500 volt-amperes minimum, 50-60 cycle. Must have three-wire power cord, plug, and receptacle with ground connection carried through from input to output.

**Purpose:** To isolate R7103 from line potential when troubleshooting power supply.

**Recommended type:** Stancor #P6298 (for 115-volt line only) modified to include three-wire power cord, plug, and receptacle.

## TROUBLESHOOTING TECHNIQUES

This troubleshooting procedure is arranged to check the simple trouble possibilities before proceeding with extensive troubleshooting. The first few checks ensure proper connection, operation, and adjustment. If the trouble is not located by these checks, the remaining steps aid in locating the defective component. When the defective component is located, replace it following the replacement procedures given under Corrective Maintenance.



http://manoman.sqhill.com

## 1. CHECK CONTROL SETTINGS

Incorrect control settings can indicate a nonexistent trouble. If there is any question about the correct function or operation of any control on the R7103, refer to Section 2, Operating Instructions.

## 2. CHECK ASSOCIATED EQUIPMENT

Before proceeding with troubleshooting, check that the equipment used with this instrument is operating correctly. Also, check that the input signals are properly connected and that the interconnecting cables are not defective. Check the line-voltage source.

## 3. VISUAL CHECK

Visually check that portion of the instrument in which the trouble is located. Many troubles can be found by visible indications, such as unsoldered connections, loose cable connections, broken wires, damaged circuit boards, and damaged components.

## 4. CHECK INSTRUMENT ADJUSTMENT

Check the electrical adjustment of this instrument, or of the affected circuit if the trouble appears in one circuit. The apparent trouble may only be a result of misadjustment. Complete adjustment instructions are given in Section 5, Checks and Adjustments.

## 5. ISOLATE TROUBLE TO A CIRCUIT

To isolate trouble to a particular circuit, note the trouble symptom. The symptom often identifies the circuit where the trouble is located. When trouble symptoms appear in more than one circuit, check the affected circuits by taking voltage and waveform measurements. Also check for the correct output signals at the front- and rear-panel output connectors with a test oscilloscope. If the signal is correct, the circuit is working correctly up to that point. For example, correct sawtooth output indicates that the time base and sawtooth output portion of the Output Signals circuit is operating correctly. If a malfunction in the Readout System is suspected of causing trouble to appear in the Z-Axis Amplifier, Vertical Amplifier, or Horizontal Amplifier circuits, the trouble can be localized by removing the Readout System circuit board. This board can be removed without significantly affecting the operation of other circuits in the instrument.

Incorrect operation of all circuits often indicates trouble in the power supply. Check first for correct voltage of the individual supplies. However, a defective component elsewhere in the instrument can appear as a power-supply trouble and may also affect the operation of other circuits. If incorrect operation of the power supplies is suspected, refer to Troubleshooting the High-Efficiency Power Supply, later in this section.

The Troubleshooting Chart, in Section 8, Diagrams and Circuit Board Illustrations, is a guide for locating defective circuits. Start at the top of the chart and perform the checks given on the left side of the page until a step is found that does not produce the indicated results. Further checks, or the circuit in which the trouble is probably located, are listed to the right of the step. This chart does not include checks for all possible defects; use steps 6 and 7 in such cases.

After the defective circuit has been located, proceed with steps 6 and 7 to locate the defective component(s).

## 6. CHECK VOLTAGES AND WAVEFORMS

Often the defective component can be located by checking for the correct voltages or waveforms in the circuit. Typical voltages and waveforms are given in Section 8, Diagrams and Circuit Board Illustrations.

**NOTE**

*Voltages and waveforms given in Section 8, Diagrams and Circuit Board Illustrations, are not absolute and may vary slightly among R7103 Oscilloscopes. To obtain operating conditions similar to those used to take these readings, see the appropriate schematic.*

## 7. CHECK INDIVIDUAL COMPONENTS

The following procedures describe methods of checking individual components in the R7103. Components which are soldered in place are best checked by first disconnecting one end. This isolates the measurement from the effects of surrounding circuitry.

**WARNING**

*To avoid electric-shock hazard, always disconnect the R7103 from the power source before removing or replacing components.*

### Fuses

Check fuses for continuity with an ohmmeter.

### Transistors

A good check of transistor operation is actual performance under operating conditions. A transistor can most effectively be checked by substituting a new component for it (or one which has been previously checked). However, be sure that circuit conditions are not such that a replacement transistor might also be damaged. If substitute transistors are not available, use a dynamic tester. Static-type testers are not recommended, since they do not check operation under simulated operating conditions.



http://manoman.sqhill.com

### Integrated Circuits

Integrated circuits (ICs) can be checked with a voltmeter, test oscilloscope, or by direct substitution. A good understanding of the circuit operation is essential to troubleshooting circuits using ICs. In addition, operating waveforms, logic levels, and other operating information for the ICs are given in Section 3, Theory of Operation and Section 8, Diagrams and Circuit Board Illustrations. Use care when checking voltages and waveforms around the ICs so that adjacent leads are not shorted together. A convenient means of clipping a test probe to the in-line, multi-pin ICs is with an IC test clip. This device also doubles as an IC-extraction tool.

### Diodes

A diode can be checked for open or short circuits by measuring the resistance between terminals with an ohmmeter on a scale having a low internal source current, such as the R X 1k scale. The resistance should be very high in one direction and very low when the meter leads are reversed.

**CAUTION**

*When checking diodes, do not use an ohmmeter scale that has a high internal current, because high currents may damage diodes.*

### Resistors

Check the resistors with an ohmmeter. Resistor tolerances are given in Section 7, Replaceable Electrical Parts. Normally, resistors need not be replaced unless the measured value varies widely from the specified value.

### Capacitors

A leaky or shorted capacitor can best be detected by checking resistance with an ohmmeter on the highest scale. Do not exceed the voltage rating of the capacitor. The resistance reading should be high after initial charge of the capacitor. An open capacitor can best be detected with a capacitance meter or by checking that the capacitor does not pass ac signals.

## 8. REPAIR AND ADJUST THE CIRCUIT

If any defective parts are located, follow the replacement procedures given under Component Replacement in this section. Check the performance of any circuit that has been repaired or that has had any electrical components replaced. Adjustment of the circuit may be necessary.

# TROUBLESHOOTING THE HIGH-EFFICIENCY POWER SUPPLY

## GENERAL

The following information is provided to facilitate troubleshooting the high-efficiency power supply. Information in other sections of this manual should be used in conjunction with this procedure to aid in locating a defective component. An understanding of the circuit operation is valuable in locating troubles. See Section 3, Theory of Operation, for this information. Specifications for the troubleshooting equipment mentioned in this procedure are given earlier in this section under Troubleshooting Equipment.

**WARNING**

*Use extreme caution when troubleshooting the power supply due to the line voltage and the high-voltage/high-current potentials present.*

When a fault condition occurs which is of insufficient magnitude to open the line fuse, protection circuitry will cause the inverter to operate in a pulse mode. In pulse mode the inverter will turn on for a short period of time, and then turn off for a longer period of time. This cycle repeats until the malfunction is corrected. This pulse mode causes either a "ticking" or a "chirping" sound. Whenever either of these sounds is heard, turn off the R7103 and proceed with the Preliminary Procedure, which follows.

## PRELIMINARY PROCEDURE

**WARNING**

*To avoid electric shock, always disconnect the instrument from the power source before removing or replacing components or plug-in units.*

1. Remove all plug-in units from the mainframe.

2. Set the CONTROL ILLUMINATION switch on the rear panel to the Off position, and the GRAT ILLUM switch on the front panel to the fully counterclockwise position.

3. Remove the power supply from the mainframe following the procedure given later in the Corrective Maintenance part of this section under Removing and Replacing Parts.

4. Connect the power-cord plug of the R7103 to the output of a variable autotransformer set for 115 volts. Connect the autotransformer to an isolation transformer and plug the isolation transformer into a 115-volt power source.



http://manoman.sghill.com

5. Push the R7103 POWER button in (to turn the instrument on) and note the trouble symptoms.

6. Turn the R7103 off and proceed to the appropriate step in the Troubleshooting Procedure as indicated by the Trouble Symptoms column in Table 4-1.

## TROUBLESHOOTING PROCEDURE

### Step A: Check Line Fuse

To check the line fuse, proceed as follows:

1. Check the line fuse (F10), which is located on the rear panel of the power-supply, for continuity and proper rating as given in Section 7, Replaceable Electrical Parts.

2. If the line fuse is open, replace it with a new fuse of proper rating.

### Step B: Isolate Malfunction from the Mainframe Circuitry

To isolate the malfunction proceed as follows:

**WARNING**

*Use extreme caution when troubleshooting the power supply to avoid electric shock. Stored dc potentials on the A23-Inverter circuit board remain long after the instrument is disconnected from the power source. Verify that the power-cord plug is disconnected and that the line storage capacitors (A23C16 and A23C17) are completely discharged before attempting any repairs or resistance measurements. (A warning-indicator neon bulb, located on the A23-Inverter Board, flashes when this stored voltage exceeds about 80 volts. However, simply because the neon bulb is not flashing does not mean that the capacitors are fully discharged.)*

1. Check the voltage at the collector of A17Q864 on the Vertical Amplifier Board. This voltage should be close to ground potential. If it is more positive than +1 V, there is probably a fault in the Vertical or Horizontal Amplifier or in the Chassis Mounted Thermal Cutout switch, S70 (shown on diagram 9).

**TABLE 4-1**
**Recommended Power Supply Troubleshooting Sequence**

| Trouble Symptom | Procedure | Proceed to Troubleshooting Step: |
|---|---|---|
| R7103 inoperative; no pulse mode. | 1. Check line fuse. | A |
| R7103 inoperative; no pulse mode; line fuse open. | 1. Check line input circuit. | D |
| | 2. Check LV rectifier circuit. | H |
| | 3. Check inverter circuit. | G |
| R7103 inoperative; no pulse mode; line fuse normal. | 1. Check inverter circuit. | G |
| R7103 operating in the pulse mode. | 1a. Check +50 V Power Supply Shutdown circuit on A17 Vertical Amplifier Board, diagram 9. | B |
| | 1b. Isolate malfunction from the mainframe circuitry. | B |
| | 2. Check pre-regulated power supplies. | C |
| | 3. Check crt and high-voltage circuits. | E |
| | 4. Check inverter control circuit. | F |
| | 5. Check inverter circuit. | G |



http://manoman.sqhill.com

2. Remove the R7103 power-cord plug from the power source.

3. Remove the protective cover from the power supply following the procedure under Access to Components in the Power Supply. This is located in this section under Removing and Replacing Parts.

4. Manually discharge the line storage capacitors using the procedure called Access to Components in the Power Supply. A two-step procedure at the end of this part describes the safest method of discharging A23C16 and A23C17.

5. Check the resistance of the power supplies at the test points given in Table 4-2. The Power Supply test points are located on the A25 Regulator Board; see Figure 8-25 in the Diagrams and Circuit Board Illustrations section.

**NOTE**

*Connect the Common lead of the ohmmeter to ground when measuring power-supply resistance.*

6. If any resistance reading is significantly lower than that listed, remove the electrical connections between the mainframe and the power-supply. Disconnect P17, P82, and P83 on the A25 Regulator Board. This isolates the circuitry in the mainframe from the power supply. Recheck the resistance. If the readings remain low, the malfunction is located within the mainframe circuits. If the readings increase to normal or above, the malfunction is in the power supplies.

7. Replace all electrical connections which were disconnected in part 6.

### Step C: Check the Pre-Regulated Power Supplies

To check the pre-regulated power supplies, proceed as follows:

1. Connect a 10X voltage probe from the test oscilloscope to resistor R84 on the A24 Control Rectifier Board. (Refer to Access to Components in the Power Supply for access to the A24 Control Rectifier Board, and see the component locator, opposite diagram 14 in Section 8, Diagrams and Circuit Board Illustrations, for the location of A24R84.) Set the test oscilloscope vertical deflection factor as necessary for an on-screen display; set the Time/Div to 2 ms.

2. Set the variable autotransformer to 115 volts. Connect the R7103 power-cord plug to the variable autotransformer; turn on the R7103.

**TABLE 4-2**
**Typical Power-Supply Resistance**

| Power Supply | Test Point* | Ohmmeter Scale | Typical Resistance Readout |
|---|---|---|---|
| +50 V | TP891 | 2k | ≥1.05 kΩ |
| +15 V | TP893 | 2k | ≈0.115 kΩ |
| +5 V | TP895 | 2k | ≈0.005 kΩ |
| −15 V | TP897 | 2k | ≈0.19 kΩ |
| −5 V | TP899 | 2k | ≥0.59 kΩ |

***See schematic diagram 9.**

**TABLE 4-3**
**Burst Voltage Test Points**

| Pre-Regulated Power Supply | Test Point Located on A24 Control Rectifier Board |
|---|---|
| +108 V | TP126 |
| +54 V | Pin 4 of P52 |
| +17 V | Pin 6 of P52 |
| −17 V | Pin 2 of P52 |
| +8 V | Pin 7 of P50 |
| −54 V | Pin 3 of P52 |
| +5 V Lights | Pin 10 of P82 on A25 Regulator Board |

3. Compare the waveform on the test oscilloscope to those shown in Figure 4-4. If the waveform resembles that of Figure 4-4A, proceed to Step E of this procedure. If it resembles that of Figure 4-4B, proceed with part 4 of this step.

4. Disconnect the 10X voltage probe from A24R84. Set the test oscilloscope vertical coupling to dc and the Time/Div to 10 ms.

5. Connect the 10X probe to each power supply at the Burst Voltage Test Points given in Table 4-3. (To locate the Burst Voltage Test Points, refer to the component locator for the A24 Control Rectifier Board, which is shown on diagram 14 in Section 8, Diagrams and Circuit Board Illustrations.) Note the polarity, amplitude, and shape of the waveform present at each test point. (Adjust the vertical deflection factor of the test oscilloscope as necessary to maintain an on-screen display.)



http://manoman.sqhill.com

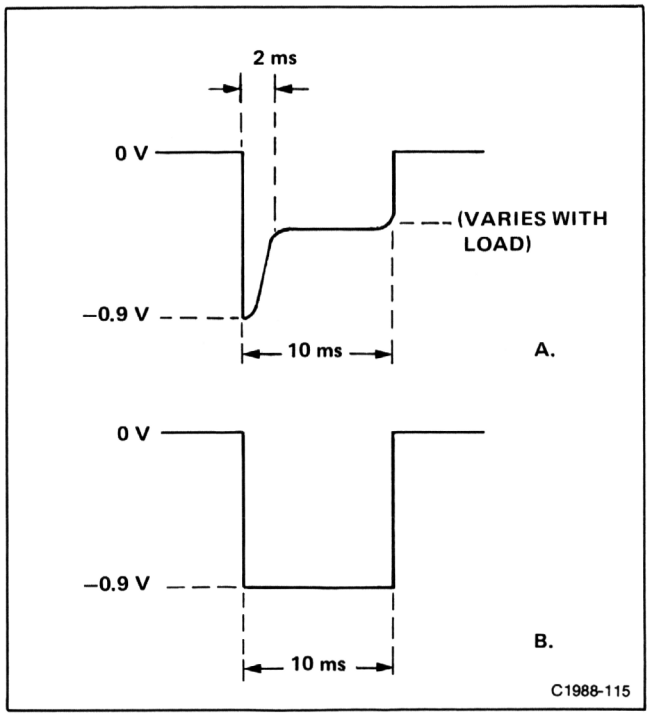


**Figure 4-4. Current sensing waveform at A24R84 showing: A. Power supplies not in current limit operation. B. Power supplies in current limit operation.**

**NOTE**

*Look for a power supply output whose burst voltage is very low in relation to the specified supply voltage.*

6. When a low supply voltage is found, disconnect the R7103 from the power source and discharge the line storage capacitors following the procedure given under Access to Components in the Power Supply. Check for shorted components in the suspected power supply; also check the filter capacitors for leakage.

### Step D: Check Line Input Circuit

To check the input circuit, proceed as follows:

1. Disconnect the R7103 from the variable autotransformer and discharge the line storage capacitors as described under Access to Components in the Power Supply.

2. Replace the line fuse.

3. Check diode bridge CR15 on the A23 Inverter Board and the associated line input circuit for a shorted component. If the circuit appears normal, connect the power cord to the variable autotransformer.

4. Connect a test probe from the digital multimeter to one of the screws used to discharge A23C16 and A23C17 (see Fig. 4-11). Connect the other test lead to ground. Set the variable autotransformer to 20 volts and turn the R7103 on.

5. Check for a multimeter reading of about 27 V dc. Move the probe tip to the other capacitor screw. Check for a dc voltage which is equal and opposite in polarity from the previous voltage. (This checks the condition of the line storage capacitors.)

### Step E: Check Crt and High-Voltage Circuit

To check the crt circuitry, proceed as follows:

1. Disconnect the R7103 from the power source and discharge the line storage capacitors following the procedure given under Access to Components in the Power Supply.

2. Remove multi-lead cable P40 from the A24 Control Rectifier board.

3. Set the variable autotransformer for 115 volts. Connect the R7103 power-cord plug to the variable autotransformer; turn the R7103 on.

4. Check for stable operation (no pulse mode) of the power supplies. If the power supplies operate properly, a crt failure or malfunction in the high-voltage circuitry is indicated.

### Step F: Check the Inverter Control Circuit

To check the inverter control circuit, proceed as follows:

1. Disconnect the R7103 from the power source and discharge the line storage capacitors as described in Access to Components in the Power Supply, later in this section.

2. Remove Q54 from the A24 Control Rectifier Board.

3. Connect the R7103 power-cord plug to the variable autotransformer. Turn the R7103 on and apply 115 volts from the variable autotransformer. If the power supplies stabilize, check the inverter control circuit for a malfunction. If the R7103 continues in pulse mode, proceed to part 4 of this step.

4. Repeat part 1 of this step. Then remove Q52 from the A24 Control Rectifier Board.

5. Set the variable autotransformer to 0 volts. Connect the R7103 power-cord plug to the variable



http://manoman.sqhill.com

autotransformer. Turn the R7103 on. While monitoring the +108 V test point on the A25 Regulator Board with a voltmeter, slowly increase the output of the variable autotransformer until the voltmeter just reads +108 volts. (The 108-volt test point is accessible through the A12R93 Pre Reg Adj hole, marked R1293 on the panel, in the bottom of the Power Supply.)

**NOTE**

*If the variable transformer output is increased past the point where the voltmeter just reaches a reading of +108 volts, the R7103 will switch to pulse mode.*

6. If the power supplies stabilize, check A24U75 and the inverter control circuit for a malfunction. If the R7103 continues in the pulse mode, proceed to Step G of this procedure.

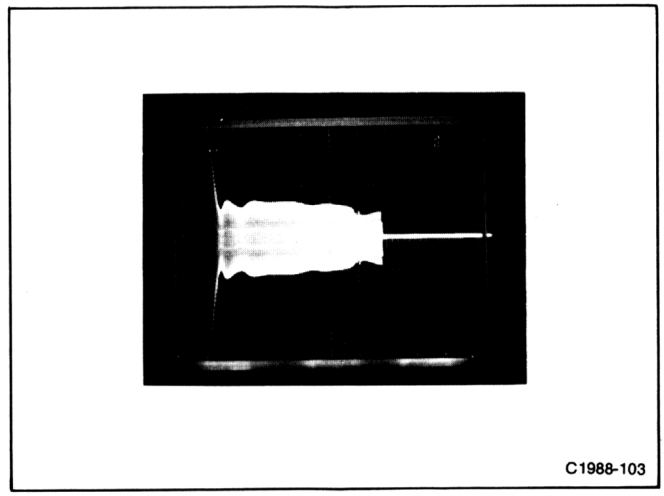


**Figure 4-5. Current waveform at A23T30 showing burst operation at line voltage of about 60 V.**

## Step G: Check Inverter Circuit

To check the inverter circuit, proceed as follows:

1. Disconnect the R7103 power-cord plug from the power source and discharge the line storage capacitors following the procedure given under Access to Components in the Power Supply.

2. Remove Q34, Q40, CR34, and CR41 on the A23 Inverter Board and check the characteristics of each with a curve tracer. Install the checked or replaced components in the A23 Inverter Board. Replace the line fuse, if it is open.

3. If the faulty component was not found, check A23Q43, A23Q45 and A23VR45 with a curve tracer.

**NOTE**

*A shift in the zener voltage of A23VR45 can cause erratic operation of the inverter circuit.*

4. If the R7103 continues in the pulse mode or keeps blowing line fuses, check the current waveform through T30 on the A23 Inverter Board. To do this, first repeat part 1 of this step. Then connect a current probe from the test oscilloscope to the gray lead that passes through toroid transformer T30. Set the test oscilloscope for a vertical deflection factor of about 1 volt/division and a horizontal sweep rate of 2 milliseconds/division. Connect the R7103 power-cord plug to the variable transformer which is set for 0 volt. Turn the R7103 on and slowly increase the variable autotransformer's output to about 60 volts. Check for a burst waveform on the test oscilloscope (similar to that shown in Fig. 4-5).

**NOTE**

*The burst waveform indicates that the inverter circuit is attempting to start. If no burst waveform occurs, proceed to part 6; if a burst waveform is obtained, proceed to part 5.*

5. If a burst waveform was obtained in part 4 above, check for stable inverter operation when the line input voltage is increased to about 85 volts. Figure 4-6 shows the current waveform at A23T30 for normal inverter operation at a line source of 115 volts. (NOTE: The test oscilloscope horizontal sweep rate has been changed to about 50 microseconds/division for Fig. 4-6.)

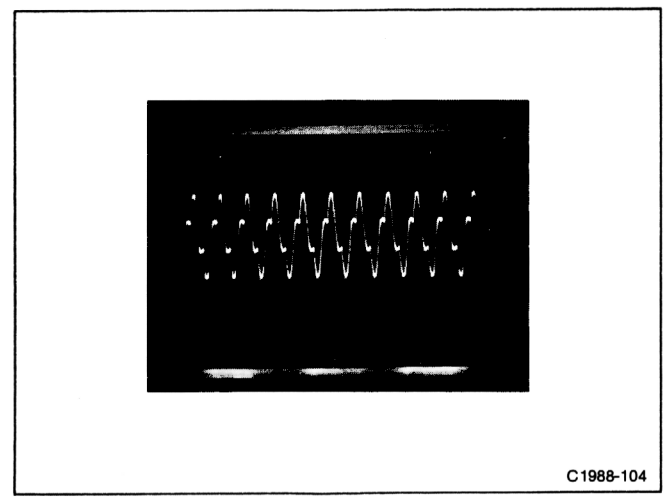


**Figure 4-6. Current waveform at A23T30 for normal inverter operation at line voltage of 115 V.**



http://manoman.sqhill.com

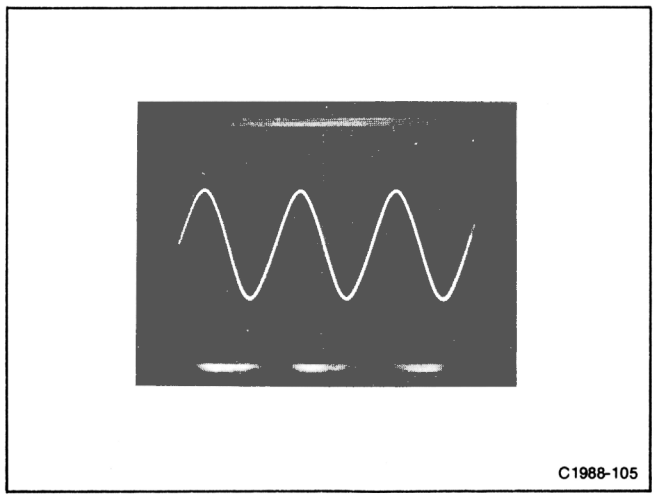


**Figure 4-7. Waveform at TP34 on the Power-Supply Inverter board with the line voltage at about 20 V.**

6. If no burst waveform occurred in part 4, repeat part 1 of this step. Then remove the current probe from the R7103 and the test oscilloscope. Connect a 10X voltage probe from the test oscilloscope to TP34 on the A23 Inverter Board (provided that access to that board has already been gained, remove the line inverter shield from the circuit board. TP34 is marked "TANK" on the A23 Inverter Board.) Set the variable autotransformer for 20 volts and check for a line-ripple waveform which is about dc centered (see Fig. 4-7). If the waveform is not centered check Q46, CR32, CR40, CR249, and CR45 on the A23 Inverter Board for shorts or leakage.

### Step H: Check LV Rectifier Circuit

1. Disconnect the R7103 power-cord plug from the power source and discharge the line storage capacitors in the power supply, following the procedure given under "Access to Components in the Power Supply." Inspect the A24 Control Rectifier Board and connecting cables for shorts and damaged components.

2. Remove dual diode CR151 from the A24 Control Rectifier Board and check with a curve tracer. Reinstall tested or replaced parts, making certain that the case is not shorted to the heat sink.

3. Lift one lead each of CR140, CR141, CR142, and CR143 on the A24 Control Rectifier Board and check with a curve tracer. Reconnect tested or replaced parts.

4. Lift one leg each of CR130, CR131, CR132, CR133, CR150, and CR153 on the A24 Control Rectifier Board and check with a curve tracer. Reconnect tested or replaced parts.

5. Check the electrolytic capacitors which filter the supplies, including A24C154 (under the board) for short circuits.

## TROUBLESHOOTING THE CRT AND ASSOCIATED CIRCUITRY

The following information is provided to facilitate troubleshooting the crt connections and associated circuitry, and is designed to prevent unnecessary crt replacement. Information in Section 3, Theory of Operation, should be used in conjunction with this procedure to aid in locating troubles.

**WARNING**

*Extreme caution must be used when troubleshooting the crt and associated circuitry due to the high voltage present in this area of the instrument.*

### CRT DISPLAY SYMPTOM CHECKOUT PROCEDURE

Perform the following procedure to determine the display symptoms associated with a crt circuit failure. Then proceed to the appropriate step in the CRT Circuit Troubleshooting Procedure as indicated by the Trouble Symptom column of Table 4-4.

Preliminary Setup:

1. Set the R7103 front-panel controls as follows:

POWER ..... OFF
INTENSITY ..... Counterclockwise
FOCUS ..... Midrange
READOUT ..... OFF
VERTICAL MODE ..... RIGHT
BEAMFINDER ..... Pushbutton in

2. Connect the R7103 to a power source that meets the voltage and frequency requirements of the instrument.

3. Install a Tektronix 7A-series amplifier in the RIGHT VERT compartment.

4. Install a Tektronix 7B-series time-base in the HORIZ compartment and set it to 1 ms/div. Set triggering controls for a free-running sweep.



http://manoman.sqhill.com

**TABLE 4-4**
**Recommended CRT Circuitry Troubleshooting Sequence**

| Trouble Symptom | Recommended Procedure | Proceed to Step: |
|---|---|---|
| 1. Bright display; no response with INTENSITY controls. | 1. Check CRT Grid; pin 3. | R |
| | 2. Check Grid Bias Supply circuit. | E |
| | 3. Check Control Grid DC Restorer circuit. | G |
| | 4. Check Z-Axis Amplifier circuit. | I |
| 2. No waveform or readout display. | 1. Check Anode Voltage Multiplier output. | A |
| | 2. Check CRT Heater supply. | B,T |
| | 3. Check Microchannel Plate Supply circuit. | C |
| | 4. Check -2400 Volt Supply circuit. | D |
| | 5. Check Grid Bias Supply circuit. | E |
| | 6. Check Z-Axis Amplifier circuit. | I |
| | 7. Check Intensity Limiter circuit. | J |
| | 8. Check Grid Crowbar circuit. | F |
| | 9. Check Control Grid DC Restorer circuit. | G |
| | 10. Check CRT First Anode, Second Section | P |
| 3. No waveform display; readout display only. | 1. Check Intensity Limiter circuit. | J |
| 4. Display only at sweep speeds below 5 μs/div. | 1. Check CRT Grid, pin 3. | R |
| 5. Dim display. | 1. Check Microchannel Plate Supply circuit. | C |
| | 2. Check Grid Crowbar circuit. | F |
| | 3. Check Z-Axis Amplifier circuit. | I |
| | 4. Check Intensity Limiter circuit. | J |
| | 5. Check Grid Bias Supply circuit. | E |
| | 6. Check Anode Voltage Multiplier output. | A |
| | 7. Check First Anode, First Section. | U |
| 6. Display intensity varies during warmup. | 1. Check Grid Bias circuit. | L |
| 7. Geometry or linearity unsatisfactory. | 1. Check CRT Scan Expansion Lens. | O |
| 8. Focusing problems; charging phenomena may be observed. | 1. Check Focus Grid DC Restorer circuit. | H |
| | 2. Check following CRT pin connections: | |
| | a. Astigmatism, pin 10. | X |
| | b. Stigmator, pin 11. | V |
| | c. First Anode, First Section, pin 7. | U |
| | d. D1-D2 Shield, P1813-pin 5. | W |
| | e. Focus Electrode, pin 4. | Q |
| | f. Spot Demagnification Lens, pin 5. | Y |
| | g. Cathode, pin 2. | S |
| | h. Isolation Shield, P1813-pin 6. | N |
| 9. Waveform and readout displays do not focus simultaneously. | 1. Check Auto Focus circuit. | K |
| 10. Low writing rate. | 1. Check Microchannel Plate Supply circuit. | C |
| | 2. Check Grid Bias Supply circuit. | E |
| | 3. Check Anode Multiplier circuit. | A |
| 11. Unacceptable background scintillation appears in photographs. | 1. Check Microchannel Plate Supply circuit. | C |
| 12. Display present with background glow. | 1. Check CRT Exit Electrode. | M |



http://manoman.sqhill.com

5. Press the POWER switch to the On (locked in) position. If a trace appears on the crt, turn the POWER switch Off and disconnect P1702 (crt heater). See Trouble Symptom #1 in Table 4-4.

6. Rotate the INTENSITY and READOUT INTENSITY controls clockwise to about midrange.

   a. If no display appears on the crt, turn the POWER switch Off and disconnect P1702 (crt heater). Refer to Trouble Symptom #2 in Table 4-4.

   b. If only the readout portion of the display appears on the crt, refer to Trouble Symptom #3 in Table 4-4.

   c. If the intensity of the displayed trace appears to change during warmup, refer to Trouble Symptom #6 in Table 4-4.

   d. If the displayed trace appears dim with the INTENSITY control set fully clockwise, refer to Trouble Symptom #5 in Table 4-4.

7. Set the time base to 5 μs/div. Adjust the INTENSITY control for a visible display. Set the time base to 2 ns/div. If the display disappears and cannot be obtained with the INTENSITY control, refer to Trouble Symptom #4 in Table 4-4.

8. Rotate the INTENSITY control. If a charging phenomena appears on the display, refer to Trouble Symptom #8 in Table 4-4.

9. Perform the Geometry procedure in Section 5, Checks and Adjustments. If the crt geometry or linearity is unsatisfactory, refer to Trouble Symptom #7 in Table 4-4.

10. Perform the Photographic Writing-Rate procedure in Section 5, Checks and Adjustments.

    a. If the waveform and readout display focuses at different positions of the FOCUS control, refer to Trouble Symptom #9 in Table 4-4.

    b. If the photographic writing rate is unsatisfactory, refer to Trouble Symptom #10 in Table 4-4.

    c. If the photograph indicates background scintillation, refer to Trouble Symptom #11 in Table 4-4.

## CRT CIRCUIT TROUBLESHOOTING PROCEDURE

### Step A: Check Anode Voltage Multiplier

1. Check that the anode lead is properly installed.

2. Turn the INTENSITY controls counterclockwise.

3. Turn the instrument off, disconnect the anode lead. Watch for an arc while you short the anode lead to the chassis. An arc indicates that the Anode Voltage Multiplier is at least partially working.

**NOTE**

*If the crt anode is open, the screen capacitance will not be charged and an arc will not be drawn when the anode is discharged to ground.*

4. Turn the instrument on and measure the anode voltage. The voltage should measure approximately 12.5 kV.

**NOTE**

*The output impedance of the anode supply is 100 MΩ. When measuring the anode voltage the loading of the voltmeter should be taken into account. Due to the 100 MΩ output impedance, the Anode Voltage Multiplier is short-proof.*

5. Check the input voltage to the Anode Voltage Multiplier at A22R1750. This should be a square-wave signal roughly centered about ground with an amplitude of 2500 volts peak-to-peak and a frequency of approximately 25 kHz. If this voltage is correct, turn the instrument off and remove the A22 High Voltage board (see Fig. 8-1 in the Diagrams and Circuit Board Locators section for the board location). Check to see if the input and ground leads of the A22V1700 Anode Voltage Multiplier are connected.

6. Replace the A22 High Voltage Board.

### Step B: Check CRT Heater Supply

1. Check for loose connections to the crt. Then check to see if the heater glows.

**WARNING**

*Potential shock hazard exists when measuring the heater supply. The heater supply is elevated to -2265 volts.*

2. Disconnect harmonica P1702 and measure the heater voltage with a true rms voltmeter. The voltage should be 6.3 volts rms; frequency about 25 kHz. If a low reading of the supply is obtained, the high voltage transformer may be defective.

3. Turn the instrument off. Check for continuity between pins 1 and 2 of P1702, and between pins 1 and 14 of the crt.



http://manoman.sqhill.com

### Step C: Check Microchannel Plate (MCP) Supply

**WARNING**

*Potential shock hazard exists: the MCP voltage can be as high as +1200 volts.*

1. Visually check for loose connections on the High Voltage Board. (See Fig. 8-1 in the Diagrams and Circuit Board Locations section for board location.)

2. Turn the INTENSITY control counterclockwise. Measure the MCP output voltage at A22TP1775 and note the reading.

3. Turn A22R1720 (MCP Gain) clockwise. The voltage reading should be about 860 volts. Turn A22R1720 counterclockwise. The voltage reading should be about 460 volts. Reset A22R1720 to the voltage reading noted in part 2.

   a. If the MCP voltage at A22TP1775 is low, ground A22TP1707 and again note the MCP voltage reading. If the voltage now reads about 1250 volts: check components A22Q1708, A22U1714A, A22CR1707, A22CR1708, A22C1707 and A22C1708. If the voltage is still low, check components A22CR1710, A22CR1711, A22C1710, and A22C1711.

**NOTE**

*With A22TP1707 grounded, the voltage at the secondary of the MCP transformer should be a square wave of about 625 volts peak.*

Remove the ground from A22TP1707.

4. Remove the plug-in unit from the horizontal compartment. Turn the INTENSITY control fully clockwise. The MCP output voltage (at A22TP1775) should increase by about 350 volts.

5. If the MCP voltage measurements are correct, check for a loose connection to the microchannel plate at the crt (P1819, pins 3 and 7). This can be done without removing the crt by connecting a DVM across resistors A22R1725 and A22R1726 and checking for about 10 volts. Typically, the voltage reading is around 10 volts, corresponding to a current of 50 $\mu$A. If no current flows, remove the crt and check for open connections.

### Step D: Check -2400 Volt Supply

**WARNING**

*To avoid electric shock, use extreme caution when troubleshooting the -2400 Volt Supply.*

1. Check the voltage at TP1844 on the A22 High Voltage board.

   a. If the reading is -2400 volts, within 5 volts, the supply is operating properly.

   b. If the reading is more than 5 volts from -2400 volts, check the cathode supply at A22TP1846 for -2265 volts. If necessary, adjust A22R1805 (-2265 V Adjust) to -2265 volts. If the adjustment has no effect, check the high-voltage regulator A22Q1784 (see below). If the adjustment has some effect but fails to obtain -2265 volts at A22TP1846, the Grid Bias Supply may not be functioning properly. See Step E: Check Grid Bias Supply.)

   c. If the reading is near ground, check:

      (1) For a 2500 volt (p-p) square-wave signal at the junction A22R1750 and pin 9 of A22T1770 with the other end of the winding pin 7) held near ground. If the appropriate signal is not obtained, check diodes A22CR1776, A22CR1778, and A22VR1784.

      (2) Check the voltage doubler by removing regulator transistor A22Q1784. The dc voltage at A22TP1844 should be approximately -2300 volts. If not, check diodes A22CR1762, A22CR1763 and capacitors A22C1750 and A22C1764.

      (3) Check the regulator transistor A22Q1784 and zener diode A22VR1784. With transistor A22Q1784 removed, the voltage at A22TP1784 should be 200 volts dc.

      (4) Check operational amplifier U1802.

      (5) Check the -2265 Adjust, A22R1805. Remove the regulator transistor A22Q1784 and connect a DVM to A22TP1806. Moving A22R1805 throughout its range should cause a dc voltage change of about 200 mV. Check for shorted or opened resistors if the 200 mV change is not obtained.

      (6) Check the thick-film high-voltage resistor A22R1802.

### Step E: Check Grid Bias Supply

**WARNING**

*Potential shock hazard exists when measuring the Grid Bias Supply; the DVM is elevated to -2400 volts.*



http://manoman.sqhill.com

1. Place a voltmeter between A22TP1846 (-2265 volts) and A22TP1844 (-2400 volts). Check for a reading of 137 volts, within 5 volts.

   a. If the voltage is low (approximately 60 to 70 volts), check A22Q1838, A22Q1842, and A22C1846 for short circuits. Then check A22Q1835 for an open junction.

   b. If the voltage is high (approximately 200 volts), check A22Q1842 and A22Q1838 for an open junction.

   c. If the voltage is more than 5 volts from 175 volts, check transistors A22Q1835, A22Q1838, and A22Q1842 on a curve tracer. Check capacitor A22C1846 for leakage by lifting one end of the capacitor from the circuit board and remeasuring the Grid Bias Supply voltage.

### Step F: Check Grid Crowbar Circuit

**WARNING**

*Potential shock hazard exists when working on the Grid Crowbar circuit since it is elevated to -2400 volts.*

1. Remove transistor A21Q1687 and check for a display. If a display is obtained, check A21Q1687 on a curve tracer. If a display is not obtained, check A21C1687 for leakage.

**CAUTION**

*To ensure crt cathode protection, check the Grid Crowbar circuit for proper operation.*

### Step G: Check Control Grid DC Restorer

**WARNING**

*Turn instrument power off before attempting to service high-voltage circuits.*

1. Set the time base for a 20 μs/div, free-running sweep.

2. Check that the waveform at the junction of A22R1811 and A22CR1747 is similar to that shown in Figure 4-8.

**NOTE**

*A typical waveform at this junction is a square wave with a frequency of about 25 kHz. The positive level should not exceed +50 volts and the negative level should be more positive than -50 volts.*

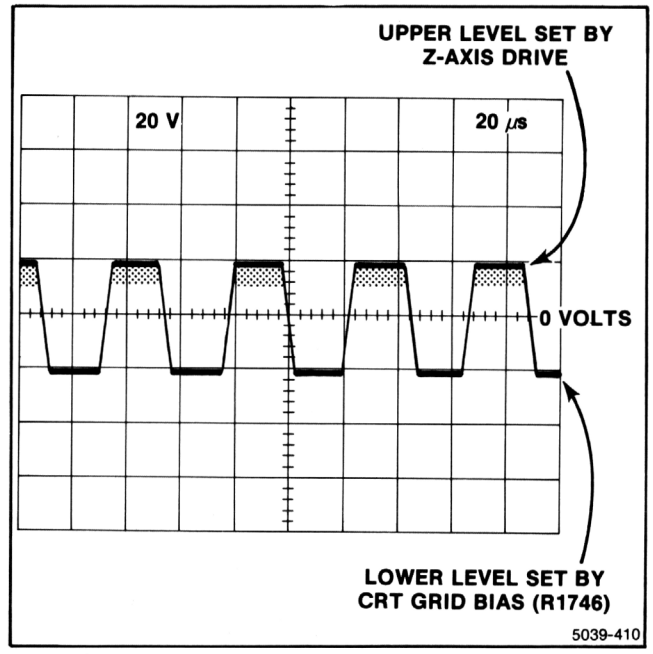


**Figure 4-8. Typical waveform at junction of R1811 and CR1747 on the A22 High Voltage Board.**

If the waveform is not like that of Figure 4-8, check the Z-Axis Amplifier by advancing the INTENSITY setting; the positive level of the square wave should also rise until the Intensity Limiter limits the Z-Axis drive. Then check the Grid Bias circuit by changing the setting of CRT Grid Bias adjustment R1746; the negative level of the square wave should also change.

a. If the square wave appears normal, but the display is bright and not subject to the INTENSITY control, check for an open crt grid.

b. If the positive level of the square wave exceeds +50 volts and the display is bright regardless of the INTENSITY control, the low-frequency signal from the Z-Axis Amplifier is disconnected from the Control Grid DC Restorer. Check diode A22CR1749 for an open, then check for loose connections.

c. If the negative level of the square wave is more negative than -50 volts and the display is bright regardless of the INTENSITY control, the Grid Bias circuit is disconnected from the Control Grid DC Restorer. Check A22CR1747 for an open.

d. If the square wave appears normal, but no display can be obtained, check A22CR1792, A22CR1794, and A22C1793 for an open.

e. If the waveform is a dc level which varies with the



http://manoman.sqhill.com

Z-Axis Amplifier output and no display can be obtained, check A22CR1794 for a short.

f. If the square wave amplitude is about 10 to 20 volts and can be positioned with the CRT Grid Bias adjustment, A22R1746, but no display can be obtained, check A22CR1747 for a short.

g. If the square-wave amplitude is about 10 to 20 volts, and cannot be positioned with CRT Grid Bias adjustment or the INTENSITY control, and no display can be obtained, check A22CR1792 and CR1794 for a short.

h. If the square wave appears normal but the INTENSITY control has no effect on its positive level, check the Z-Axis Amplifier circuit.

i. If the square wave appears normal but a display can be obtained only with the INTENSITY control fully clockwise, the Grid Bias circuit is not functioning. Check A22Q1748 and A22Q1742.

j. If the waveform is not normal and no display can be obtained, the high-voltage transformer is not driving the Control Grid DC Restorer. Check the resistor string of A22R1811, A22R1812, A22R1788, and A22R1789.

## Step H: Check Focus Grid DC Restorer

**WARNING**

*Turn instrument power off before attempting to service high voltage circuits.*

1. Check that the waveform at the junction of R1814 and CR1816 is similar to that shown in Figure 4-9.

**NOTE**

*A typical waveform is a square wave of about 25 kHz. The negative level should be -0.7 volt. The positive level is determined by the setting of the front-panel FOCUS control and can be anywhere between +0.7 volt and +50 volts.*

a. If the negative level of the waveform is more negative than -50 volts, check diode A22CR1816 for an open.

b. If the positive level of the waveform exceeds +50 volts, check diode A22CR1820 for an open circuit.

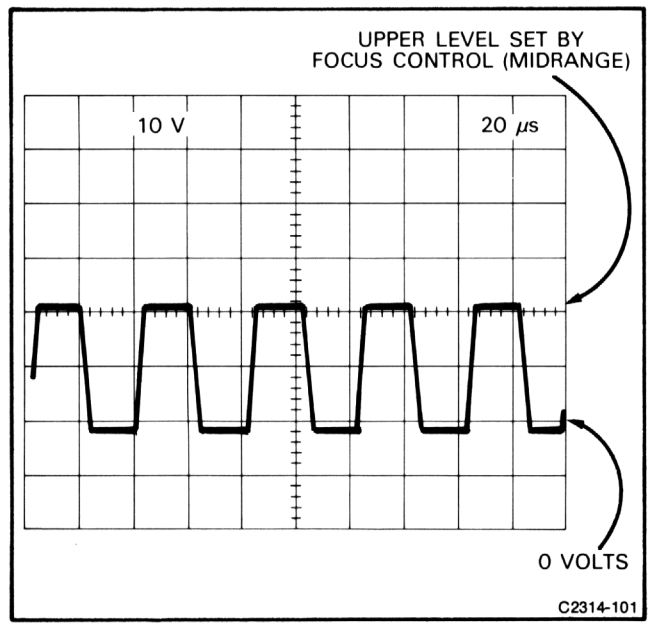


**Figure 4-9. Typical waveform at junction of R1814 and CR1816 on the A22 High Voltage Board.**

c. If the amplitude of the waveform is small and the FOCUS control has no effect on the positive level of the waveform, check A22CR1816 for a short circuit.

d. If the amplitude of the waveform is small and the FOCUS control can vary the positive level from 0 to +50 volts, check A22CR1820 for a short circuit.

e. If the waveform is not as shown in Figure 4-9 and the dc level is above ground with the FOCUS control at midrange, check diode CR1818 or CR1819 for a short.

f. If the waveform is not as shown in Figure 4-9, the Focus Grid DC Restorer may not be receiving drive signal from the high voltage transformer. Check resistors A22R1788, A22R1789, A22R1813, and A22R1814.

g. If the waveform appears normal but the display has focusing problems, check for an open crt focus electrode. Then check for proper adjustment of the Focus Preset and for defective resistors in the focus string. Check A22CR1819, A22CR1818, and A22C1819 for an open circuit.

**NOTE**

*The focus-preset voltage, across A22C1820, ranges from about -1385 volts to -1560 volts as determined by the setting of the Focus Preset A22R1825.*



http://manoman.sqhill.com

### Step I: Check Z-Axis Amplifier

1. Check A21TP1678, on the Z-Axis Board, for a waveform with a baseline at +8 volts, within 1 volt, and an amplitude of at least 55 volts above the baseline.

**NOTE**

*To obtain maximum Z-Axis drive without engaging the Intensity Limiter, set the time-base Time/Division control fully clockwise and position the trace off the crt screen. Refer to Z-Axis and Display in Section 5, Checks and Adjustment, to properly adjust the Z-Axis Amplifier.*

2. Check the dc voltage at A21TP1672. The voltage should be +75 volts, within 5%. If it is not, check transistor A21Q1672 and zener diode A21VR1671.

3. If the voltage at A21TP1672 is about +60 volts and the display intensity is high, check the voltage at the collector of A21Q1608: the baseline should be at +1.6 volts, and the signal amplitude should be about 700 mV.

   a. If the conditions in part 3 are met, check transistors A21Q1648, A21Q1668, and A21Q1676.

   b. If the conditions in part 3 are not met, check transistors A21Q1608 and A21Q1618 for a short.

4. If the voltage at A21TP1678 is at ground and no display can be obtained, the Intensity Limiter may be inhibiting the Z-Axis Amplifier by saturating A21Q1644, or A21Q1644 may be shorted. Check A21Q1644.

   a. If the baseline voltage at the collector of A21Q1608 is not at +1.6 volts and the signal amplitude is not about 700 mV, check A21Q1626, A21Q1608, A21Q1632, and A21Q1603.

   b. If the signal is correct, check transistors A21Q1668 and A21Q1644 for a short circuit.

### Step J: Check Intensity Limiter

**NOTE**

*When troubleshooting the Intensity Limiter circuit, flood the crt display with many cycles of a large amplitude sine wave.*

1. If the Intensity Limiter is inhibiting the Z-Axis Amplifier, check the Z-Axis Off signal at A1TP1992 (on the A1 Front-Panel Board) On a properly operating instrument the signal level at A1TP1992 is +120 mV; on an instrument which is shut-down the signal level is +3.4 volts.

   a. If the signal at A1TP1992 is +120 mV, the fault is in the Z-Axis Amplifier. (Refer to Step I: Check Z-Axis Amplifier.)

   b. If the reading is +3.4 volts, check pin 2 of A1U1992 (the flip-flop may not be receiving a reset). Check A1U1992 by replacing it.

2. Check that operational amplifier A1U1952 converts the average screen current to a dc voltage at a rate of 1 μA/volt. With the INTENSITY control turned fully counterclockwise, the voltage at A1TP1952 should be zero volts; it should increase as the INTENSITY control is advanced. If this does not occur, check the Screen I Sense connection to the Anode Voltage Multiplier. (When the INTENSITY control is advanced, a negative voltage should be measured at pin 8 of A1P1904. If zero volts is measured here, either the connection is open or the Anode Voltage Multiplier is defective.) Also check A1U1952.

3. Turn the INTENSITY control clockwise until the LIMITED VIEWING TIME indicator turns on steadily, and observe that this occurs when the voltage at A1TP1952 is approximately +0.2 volt dc (0.2 μA of average screen current).

   a. If the condition in part 3 is not met, check that the voltage at pin 6 of A1U1958B is +0.2 volt dc. Measure the voltage at A1TP1962; with zero screen current the reading should be about −12 volts. When the INTENSITY control is advanced and the average screen current exceeds 0.2 μA, the reading should be about +12 volts. If the readings are much different, check operational amplifier A1U1958 by replacing it.

   b. If the condition in part 3 is not met, check for a loose connection to the LIMITED VIEWING TIME indicator (LED A1DS1970) Check A1DS1970.

   c. If the LIMITED VIEWING TIME indicator is on continuously (at zero screen current) and starts flashing at an average screen current above 0.2 μA, transistor A1Q1970 is shorted.

4. Advance the INTENSITY setting until the LIMITED VIEWING TIME indicator starts flashing, and observe that this occurs when the voltage at A1TP1952 is aproximately +2.0 volts dc, or 2 μA average screen current. If this does not occur, check the following:

a. Check 3 Hz Oscillator A1U1968; at zero screen current the voltage at A1TP1968 is about +12 volts,



http://manoman.sqhill.com

but will oscillate between ground and +12 volts when the INTENSITY control is advanced to the limited-viewing condition (LIMITED VIEWING TIME indicator is on steadily). If no oscillation occurs, check U1968 by replacing it.

b. The voltage at pin 2 of A1U1958A should be +2.0 volts dc.

c. Measure the voltage at A1TP1958. With zero screen current the reading should be at about -12 volts. When the INTENSITY control is advanced and the average screen current is 2 $\mu$A, the voltage reading should have increased to at least -8.0 volts dc. If the readings are much different, check operational amplifier A1U1958 by replacing it.

d. Check transistor A1Q1970 for conduction.

5. Advance the INTENSITY setting until the LIMITED VIEWING TIME indicator just starts to flash. Observe that further advance of the INTENSITY control does not increase the display intensity and that limiting is taking place. (With proper limiting, the voltage at A1TP1956 is -10.6 volts and increases towards ground when limiting occurs.) If this does not occur, check the following:

a. Check transistor A1Q1956 for a short circuit.

b. Check for proper connection of the Intensity Reference line (pin 4 of P1904) to diode A5CR319 on the A5 Mode Switch Board. (See Fig 8-1 for location of the A5 Mode Switch Board.)

c. Check A5CR319 for an open circuit.

6. Advance the INTENSITY setting until the LIMITED VIEWING TIME indicator flashes. Check that after approximately one minute the SHUTDOWN indicator starts to flash. If this does not occur:

a. Check integrator A1U1970. With zero screen current, the voltage at A1TP1970 should be at ground or moving toward ground. Observe that when the INTENSITY setting is advanced until the LIMITED VIEWING TIME indicator is on steadily, the voltage starts moving toward -10 Volts. If the INTENSITY control is further advanced, the voltage slew rate should increase. The slew rate is maximum when limiting occurs (LIMITED VIEWING TIME indicator is flashing) and should be about 5 volts/minute. If this does not occur, one of the following failures may have occurred:

(1) The base of A1Q1980 is held at ground by either a shorted RESET button or by a shorted or saturated A1Q1999.

(2) Transistor A1Q1982 is not conducting.

(3) Transistor A1Q1978 is shorted.

(4) Operational-amplifier A1U1970 is defective.

(5) Field-effect transistor (FET) A1Q1974 is not conducting. This causes the voltage at A1TP1970 to stop at about -2.0 or -3.0 volts instead of -10 volts.

(6) Capacitor A1C1971 is leaking. The symptoms are similar to those for an open FET. Press the RESET button, then advance the INTENSITY control until limiting occurs. After about one minute, the voltage at A1TP1970 should be -10 volts. If this differs significantly, replace A1C1971.

(7) Check the 10-second delay timer. The voltage at A1TP1986 should measure zero volts at zero screen current. When the INTENSITY setting is advanced and the output of the integrator has reached about -10 volts, the voltage at A1TP1986 should jump to about +3.6 volts. After about 10 seconds, the voltage should drop to ground level. If this does not occur, check A1U1986 by replacing it.

(8) Check SHUTDOWN LED A1DS1994 for loose connections or failure.

7. Advance the INTENSITY setting until limiting occurs, and wait approximately two minutes until the SHUTDOWN indicator starts flashing. After approximately 10 seconds, the indicator should be on steadily and the display should shut down. If this does not occur:

a. Check transistor A1Q1995. This transistor should momentarily go out of saturation when timer A1U1986 has timed out.

b. Check flip-flop A1U1992. The voltage at A1TP1992 should increase from 0.1 volt to about +3.4 volts when timer A1U1986 has timed out.

c. Check transistor A1Q1994.

d. Check for a loose connection of the Z-Axis Off line (pin 1 of A1P1904) to the Z-Axis Amplifier.

e. Check transistor A1Q1644.



http://manoman.sqhill.com

8. When the instrument is shut down, the voltage at A1TP1992 is about +3.4 volts dc. If pressing the RESET button does not restore the display, check the following:

   a. Check the RESET switch. The voltage at the base of A1Q1980 should be +2.3 volts and should drop to +0.2 volt when the RESET button is pressed.

   b. Check flip-flop A1U1992 by replacing it.

9. With the SHUTDOWN indicator flashing, shutdown can be prevented by reducing the average screen current to below 0.2 $\mu$ A (LIMITED VIEWING TIME indicator off). If this does not occur, check the following:

   a. Transistors A1Q1998 and A1Q1999.

   b. Ten-second delay timer A1U1986, if it does not reset.

### Step K: Check Auto Focus Amplifier

1. Check the dc voltage at the emitter of A21Q1607. The voltage should be about -8.5 volts. If the voltage reading differs by more than 0.2 volts, check transistor A21Q1607 and diode A21CR1607.

2. Obtain a full-drive crt display that is not intensity limited. The front-panel LIMITED VIEWING TIME indicator should not flash.

3. Check the auto-focus signals at the collector of A21Q1603. With the INTENSITY control fully counterclockwise, the signal is clamped by diode A21CR1609 to a voltage of -7.9 volts. At about midrange of the INTENSITY control, diode A21CR1609 ceases to conduct. With the INTENSITY control fully clockwise, the waveform at the collector of Q1603 should have an amplitude of 0.9 volt. If not, check transistor A21Q1603 and diode A21CR1609.

4. Check the auto-focus signal at A21TP1628. With the INTENSITY control fully clockwise, the amplitude of the signal should be about 7 volts (depending upon the focus gain adjustment). If not, check transistors A21Q1629, A21Q1620, and A21Q1617.

5. Check the connection to the crt focus electrode.

### Step L: Check Grid Bias Compensation

1. Turn the instrument off and discharge capacitor C1736 on the A22 High Voltage Board.

2. Connect a DVM to A22TP1736 and turn the instrument on. The voltage should be approximately +7.1 volts and should increase to +12.5 volts in 10 minutes. If the voltage is different, check the following:

   a. Check operational amplifier A22U1736 by replacing it.

   b. Check A22CR1736.

   c. Check A22C1736 for leakage.

   d. Check A22Q1742.

### Step M: Check CRT Exit Electrode

1. The best way to detect an open exit electrode is with a magnified sweep and maximum Z-Axis drive. The duty cycle should be such that the LIMITED VIEWING TIME indicator stays lit.

2. Move the trace vertically and horizontally and look for a background glow. This glow indicates an open exit electrode.

### Step N: Check CRT Isolation Shield (A22P1813, Pin 6)

1. Obtain a focused display, then turn the instrument off and disconnect pin 6 of A22P1813.

2. Turn the instrument back on; if the isolation shield is open, the display will now be out of focus.

### Step O: Check CRT Scan Expansion Lens (A22P1810, A22P1819 Pin 10)

**WARNING**

*Turn the instrument off before attempting to service the A22 High Voltage Board.*

**NOTE**

*The scan-expansion lens is connected to seven different high potentials. Six are negative, one is positive. If any of these elements is floating, obtaining a focused display is still possible. In addition to a focused trace, the display can show geometry problems, linearity problems, and low vertical or horizontal gain.*

*Because the lens draws no current, detecting an open element is difficult. To detect an open connection to the Horizontal Bowing element, adjust Horizontal Bowing and observe that the display is not affected. This is the only case where the voltage varies on one element only; the other elements are adjusted in pairs.*



http://manoman.sqhill.com

1. To detect an open scan-expansion lens, lift the 160-ohm series resistors on the A22 High Voltage Board one at a time and look for a change in the display. No change in the display indicates an open connection.

### Step P: Check CRT First Anode, Second Section (Pin 8, CRT Socket)

An open first anode, second section, will result in no display. Some display flashing may be observed as the INTENSITY control is advanced.

### Step Q: Check CRT Focus Electrode (Pin 4, CRT Socket)

When the crt focus electrode is open, the display is very badly defocused and the FOCUS control has no effect.

### Step R: Check CRT Grid (Pin 3, CRT Socket)

The display is always bright and the Z-Axis has no control when the crt grid is open. Check the connection to pin 3 of the crt.

### Step S: Check CRT Cathode (Pin 2, CRT Socket)

With an open crt cathode, the display defocuses when the Z-Axis drive is changed.

### Step T: Check CRT Heater (Pin 1 and 14, CRT Socket)

No display is obtained if the crt heater is open. Turn off the instrument and check for continuity between pins 1 and 2 of P1702, then between pins 1 and 14 of the crt socket.

### Step U: Check First Anode (Pin 7, CRT Socket)

If the first anode is open, the display is badly defocused and dim. Charging can be observed when changing the Z-Axis drive. The first anode draws current. On the A22 High Voltage Board, at the junction of A22R1896 and A22R1897, a voltage waveform can be observed which is related to the Z-Axis drive. The front-panel +GATE waveform is useful for establishing a relationship to the Z-Axis drive.

### Step V: Check CRT Stigmator (Pin 11, CRT Socket)

If the crt stigmator is open, the display cannot be focused. If the instrument has been off for a few minutes, then turned on with the INTENSITY control at about midrange, the display at first is severely defocused and then slowly changes to a defocused display. If adjusting R1894 on the A22 High Voltage Board has no effect on the display, the stigmator is open.

### Step W: Check CRT D1-D2 Shield (Pin 5, A22P1813)

If the D1-D2 shield is open, the display cannot be focused and charging effects are not noticeable. The D1-D2 shield is open if adjusting R1891 on the A22 High Voltage Board has no effect on the display.

### Step X: Check CRT Astigmatism (Pin 10, CRT Socket)

With an open crt astigmatism element the display cannot be focused, but charging may be observed. The front-panel ASTIG screwdriver adjustment has no effect. Turn the FOCUS control to midrange, slowly turn the INTENSITY control to about midrange. The trace initially is defocused, then goes into focus and defocuses again. If the instrument has been off for some time, turn the FOCUS and INTENSITY controls to midrange, and turn on the instrument. Initially the display is very badly defocused then slowly drifts into focus and finally defocuses again.

### Step Y: Check Spot Demagnification Lens (Pin 5, CRT Socket)

If the crt spot demagnification lens is open, the display is badly defocused and the FOCUS control has no effect.



http://manoman.sqhill.com

# CORRECTIVE MAINTENANCE

Corrective maintenance consists of component replacement and instrument repair. Special techniques required to replace components in the R7103 Oscilloscope mainframe are given here.

## OBTAINING REPLACEMENT PARTS

All electrical and mechanical part replacements for the R7103 can be obtained through your Tektronix Field Office or representative. However, many of the standard electronic components can be obtained locally in less time than is required to order them from Tektronix, Inc. Before purchasing or ordering replacement parts, check the parts list for value, tolerance, rating, and description.

**NOTE**

*When selecting replacement parts, remember that the physical size and shape of a component may affect its performance in the instrument. All replacement parts should be direct replacements unless you know that a different component will not adversely affect instrument performance.*

Some parts are manufactured or selected by Tektronix, Inc. to satisfy particular requirements, or are manufactured for Tektronix, Inc. to our specifications. Most of the mechanical parts used in this instrument have been manufactured by Tektronix, Inc. To determine manufacturer of parts, refer to Parts List, Cross Index Mfr. Code Number to Manufacturer.

When ordering replacement parts from Tektronix, Inc., include the following information:

1. Instrument type.
2. Instrument serial number.
3. A description of the part (if electrical, include circuit number).
4. Tektronix part number.

## SOLDERING TECHNIQUES

**WARNING**

*To avoid electric-shock hazard, and instrument damage disconnect the instrument from the power source before soldering.*

The reliability and accuracy of this instrument can be maintained only if proper soldering techniques are used when repairing or replacing parts.

The desoldering and removal of parts is especially critical and should be done only with a vacuum solder extractor; preferably, one approved by a Tektronix Inc. Service Center.

Use wire solder with rosin core, 63% tin, 37% lead. Contact your local Tektronix Inc. representative or field office for approved solders.

Several of the R7103 circuit boards are multilayer. Conductive paths between the top and bottom board layers may connect with one or more of inner layers. If this inner conductive path is broken (due mainly to poor soldering practices), the board is unusable and must be replaced. Damage can void warranty.

**CAUTION**

*Only an experienced maintenance person, proficient in the use of vacuum type desoldering equipment, should attempt repair of any board in this instrument.*

When soldering on circuit boards or small wiring, use only a 15-watt, pencil-type soldering iron. A higher wattage soldering iron can cause the etched circuit wiring to separate from the board base material, and melt the insulation from small wiring. Always keep the soldering-iron tip properly tinned to ensure the best heat transfer to the solder joint. Apply only enough heat to make a good solder joint. To protect heat-sensitive components, hold the component lead with a pair of long-noise pliers between the component body and the solder joint.

The following technique should be used to replace components on the circuit boards.

Touch the tip of the vacuum desoldering tool directly to the solder to be removed.

**CAUTION**

*Excessive heat can cause the etched circuit wiring to separate from the board base material.*



http://manoman.sqhill.com

Never allow the solder extractor to remain on the board for more than three (3) seconds. Solder wick, spring-actuated or squeeze-bulb solder suckers, and heat blocks (for multi-pin components) must not be used. Damage can void warranty

**NOTE**

*Some components are difficult to remove from the circuit boards due to a bend placed in each lead during machine insertion of the component. The bent leads held the component in position during a flow-solder manufacturing process which soldered all components at once. To make removal of machine inserted components easier, first remove the solder from the joint, then straighten the leads of the component on the back of the circuit board using a small screwdriver or pliers.*

When removing multi-pin components i.e., IC's, do not heat adjacent conductors consecutively (see Fig. 4-10). Allow a moment for the circuit board to cool before heating the next pin.

Bend the leads of the replacement components to fit the holes in the circuit board. Insert the leads into the holes in the board, or as originally positioned.

Touch the iron to the connection and apply enough solder to make a firm solder joint.

Cut off any excess lead protruding through the board.

Clean the areas around the solder connection with a flux removing solvent. Be careful not to remove the information printed on the circuit board.

## REMOVING AND REPLACING PARTS

**WARNING**

*To avoid electric-shock hazard, always disconnect the instrument from the power source before removing or replacing components or plug-in units.*

The exploded-view drawings associated with the Replaceable Mechanical Parts list (located at the rear of this manual) may be helpful in the removal or disassembly of individual components or sub-assemblies.

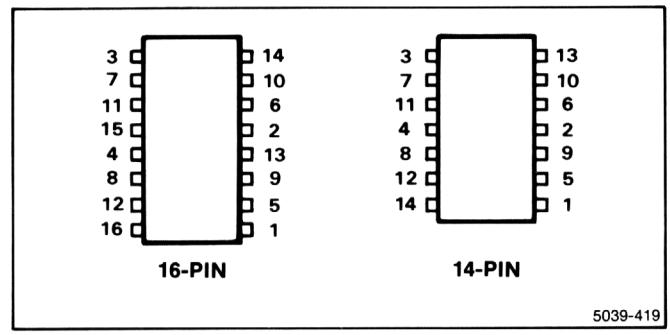


**Figure 4-10. Recommended desoldering sequence.**

## HOW TO REMOVE THE POWER SUPPLY

The power supply can be removed from the rear of the R7103 for maintenance and troubleshooting. To remove the power supply from the mainframe, proceed as follows:

- Remove the four screws which hold the power supply to the rear frame of the instrument (see Fig. 4-11).
- Slide the power supply out of the mainframe until it can be set on the work surface (be sure to guide the interconnecting cables so they do not catch on other parts of the instrument).

The power supply remains electrically connected to the rest of the instrument in this position, allowing troubleshooting. If it is necessary to operate the R7103 with the power supply removed, we recommend that the power supply be secured to the instrument with spacers between the rear frame and the power supply.

To install the power supply into the mainframe, follow the removal procedure in reverse order. Be careful not to pinch the interconnecting cables. Be sure that all the securing screws are tight.

### Access to Components in the Power Supply

To reach components inside the power supply for maintenance or repair, use the following procedure:

**WARNING**

*Disconnect the R7103 from the power source and allow the line storage capacitors to discharge before removing the power supply cover. The line storage capacitors remain charged with high voltage dc for several minutes after the line power is disconnected unless they are manually discharged. A warning-indicator (neon bulb) located on the A23-Inverter board, flashes when this stored voltage exceeds about 80 volts. Do not remove the power supply cover while this light is flashing.*



http://manoman.sqhill.com

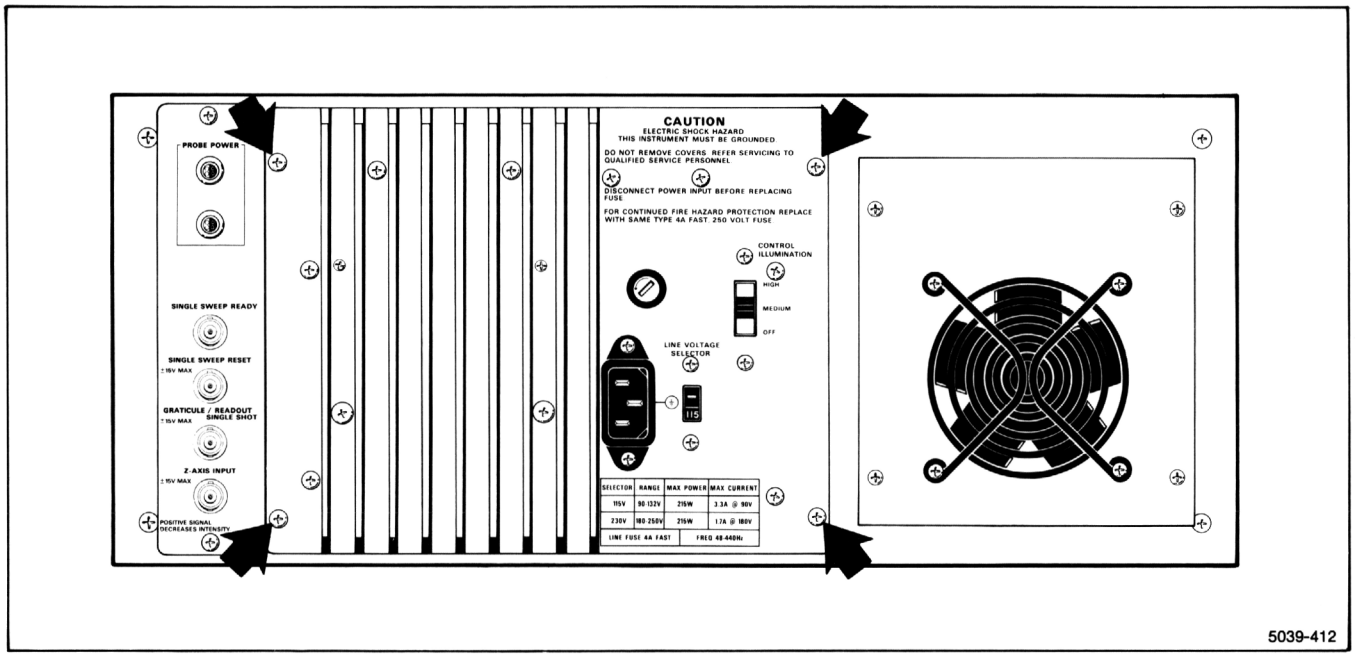


**Figure 4-11. Screws that retain the Power Supply.**

1. Remove the power supply as previously described.
2. Remove the four small screws that secure the cover to the rear heatsink.
3. Remove the nine screws that fasten the sides of the cover to the power-supply chassis.
4. Disconnect the two coaxial connectors from P1440 on A24 Control Rectifier Board.
5. Remove the cover from the power supply.
6. The power supply is now open for maintenance or repair. If the R7103 is to be operated with the cover removed, first reconnect the coaxial cables to the A24 Control Rectifier Board.
7. To replace the power-supply cover, follow the removal procedure in reverse order.

Before performing maintenance or taking resistance measurements in the power supply, manually discharge the line storage capacitors (A23C16 and A23C17) as follows:

- Remove the protective cover from the power supply as previously described.
- Apply a 1.5-kilohm, 2-watt, insulated resistor across the capacitor screws as shown in Figure 4-12.

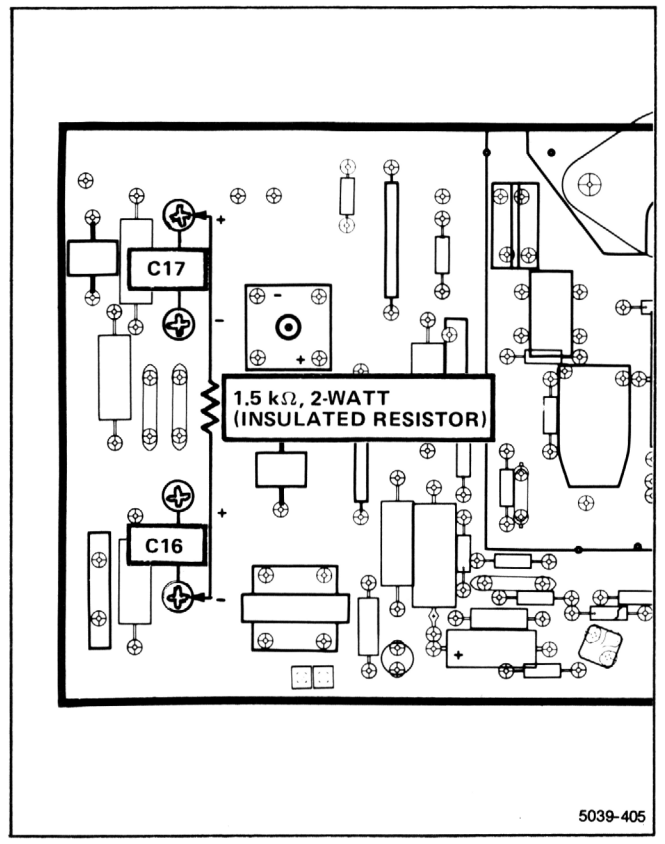


**Figure 4-12. Location of terminals used to manually discharge C16 and C17.**



http://manoman.sqhill.com

## HOW TO REMOVE THE CATHODE-RAY TUBE

**NOTE**

*Before removing the cathode-ray tube (crt), be certain that removal is necessary: see CRT Troubleshooting Procedure.*

Remove the crt as follows:

**WARNING**

*The crt may retain a dangerous electrical charge. Before removing the crt, the anode must be fully discharged by shorting the anode lead from the crt to the chassis. Wait approximately ten minutes and again firmly short this lead to the chassis. Then remove the crt.*

*Use care when handling a crt. Breakage of the crt causes a high-velocity scattering of glass fragments (implosion). Protective clothing and safety glasses should be worn. Avoid striking the crt on any object which might cause it to crack or implode. When storing a crt, place it in a protective carton or set it face down in a protected location on a smooth surface with a soft mat under the faceplate.*

1. Remove the crt base-pin socket from the rear of the crt.

2. Loosen the two screws located above and below the crt base pins until the tension of the springs on these screws is released. Then, press in on the screws to be certain that the crt clamp inside the crt shield is loose.

3. Disconnect the two vertical deflection-plate connectors from the left side of the crt.

4. Disconnect the two horizontal deflection-plate connectors from the top of the crt.

5. Disconnect the crt anode lead from the jack located between the crt shield and the center bulkhead. Ground this lead to the chassis to dissipate any stored charge remaining in the crt.

6. Remove the plastic A22 High-Voltage Board shield on the bottom of the instrument.

7. Disconnect P1811, P1810 and P1813 from the A22 High-Voltage Board.

8. Remove the plastic mask which covers the crt bezel.

9. Remove the four screws that hold the crt bezel to the front panel. Remove the bezel while disconnecting the three-pin connector from the left rear of the bezel.

10. Remove the plastic faceplate protector, the graticule light assembly, and the faceplate mask. (The graticule light assembly need not be unsoldered from its leads.)

11. Hold one hand on the crt faceplate and gently push forward on the crt base with the other. Slowly pull the crt out from the front of the instrument while guiding the cable connected to P1811, P1810 and P1813, and the crt anode lead, through the holes in the crt shield.

## HOW TO REPLACE THE CATHODE-RAY TUBE

Replace the cathode-ray tube (crt) as follows:

1. Insert the crt into the shield, guiding the crt anode plug and the cables connected to P1811, P1810 and P1813 through the holes in the crt shield and center bulkhead. Set the crt firmly against the front-panel casting.

2. Clean the crt faceplate, plastic faceplate protector, and the light filter with denatured alcohol.

3. Place the crt mask over the faceplate. Connect the multi-pin connector to the crt bezel (align the arrow on the connector with the arrow on the bezel).

4. Hold the faceplate protector in position and replace the crt bezel, graticule light assembly, light filter frame, and light filter. Check that the light filter is properly aligned, then firmly tighten the four screws.

5. Gently push forward on the crt base to ascertain that the crt is as far forward as possible. Then tighten the two screws beside the crt base until the springs on the screws are fully compressed.

6. Place the crt base-pin socket on the crt base pins.

7. Reconnect the crt anode plug.

8. Carefully reconnect all cables and crt neck-pin connectors.

9. Replace the plastic crt bezel mask.

**NOTE**

*Replacing the crt will require that the R7103 be re-adjusted. Refer to Section 5, Checks and Adjustment.*



http://manoman.sqhill.com

## CIRCUIT BOARDS

If a circuit board is damaged beyond repair, replace the entire board assembly. Part numbers for completely wired boards are given in Section 7, Replaceable Electrical Parts.

Most of the circuit boards in the R7103 are mounted on the chassis; pin connectors are used for electrical interconnection with chassis-mounted components and other circuit boards. Two boards plug onto the rear of the A6 Interface Board; feed-through connectors connect the plug-on boards to the A6 Interface Board.

### Chassis-Mounted Boards

Remove and replace all chassis-mounted circuit boards as follows:

1. Disconnect all pin connectors attached to the board, or which connect the board to other parts of the instrument.
2. Remove the securing screws.
3. Remove the chassis-mounted board.
4. Replace chassis-mounted boards in the reverse order of removal. Match the index arrow on the multi-pin connectors to the corresponding arrow on the board. Correct location of the pin connectors is shown on the circuit board illustration in Section 8, Diagrams and Circuit Board Illustrations.

### Plug-On Boards (A13 Logic Board, A14 Trigger Selector Board)

Remove and replace the plug-on boards as follows:

1. Remove the plug-in units to gain access to the screws that fasten the boards mounted on the rear of the A6 Interface Board.
2. Disconnect any end-lead coaxial connectors located on the front of the board, or those which pass across a portion of the board.
3. Remove the two electrical shields at the rear of the plug-in compartment as follows:
   a. Remove the single screws at the tops of the shields.
   b. Loosen, but do not remove, the two screws at the bottom of each shield.
   c. Pull the top of the shield outward, then move the shield up and off the two bottom screws.
4. Working through the plug-in compartment, loosen the screws (two for each board) that fasten the board(s) to the A6 Interface Board. See Figure 4-13. (The board-retaining screws are captive screws; loosen them enough to disengage them from the circuit board, but do not remove them from their parent assembly.)
5. Keep the board parallel to the A6 Interface board, then gently pull outward on its edges until the feed-through terminals are fully disengaged.
6. To replace a plug-on circuit board, position the board parallel to the A6 Interface Board so that all feed-through pins are properly aligned with their sockets.
7. Gently press the circuit board against the mounting surface. Be sure that all feed-through pins and sockets mate properly.
8. Uniformly tighten the securing screws (recommended torque: four to six inch-pounds).
9. Replace the two electrical shields. Be sure to put the tops of the shields behind the spring clips at the top of the plug-in compartment.

### A5 Mode Switch Board

Remove or replace the A5 Mode Switch Board as follows:

**CAUTION**

*Do not allow solder or solder flux to flow under printed circuit board switches. The printed circuit board is part of the switch contacts, and intermittent switch operation can occur if contamination enters the switch assembly.*

1. Disconnect the pin connectors and remove the four screws that fasten the board to the chassis.
2. Remove the knobs, retaining nuts, and flat washers from the INTENSITY and FOCUS potentiometers.

**NOTE**

*When removing wires from a circuit board, always tag the wire and the corresponding connection point on the circuit board.*

3. Slide the board toward the rear of the instrument until the front-panel pushbuttons clear the chassis.
4. Lift the board from the instrument.



http://manoman.sqhill.com

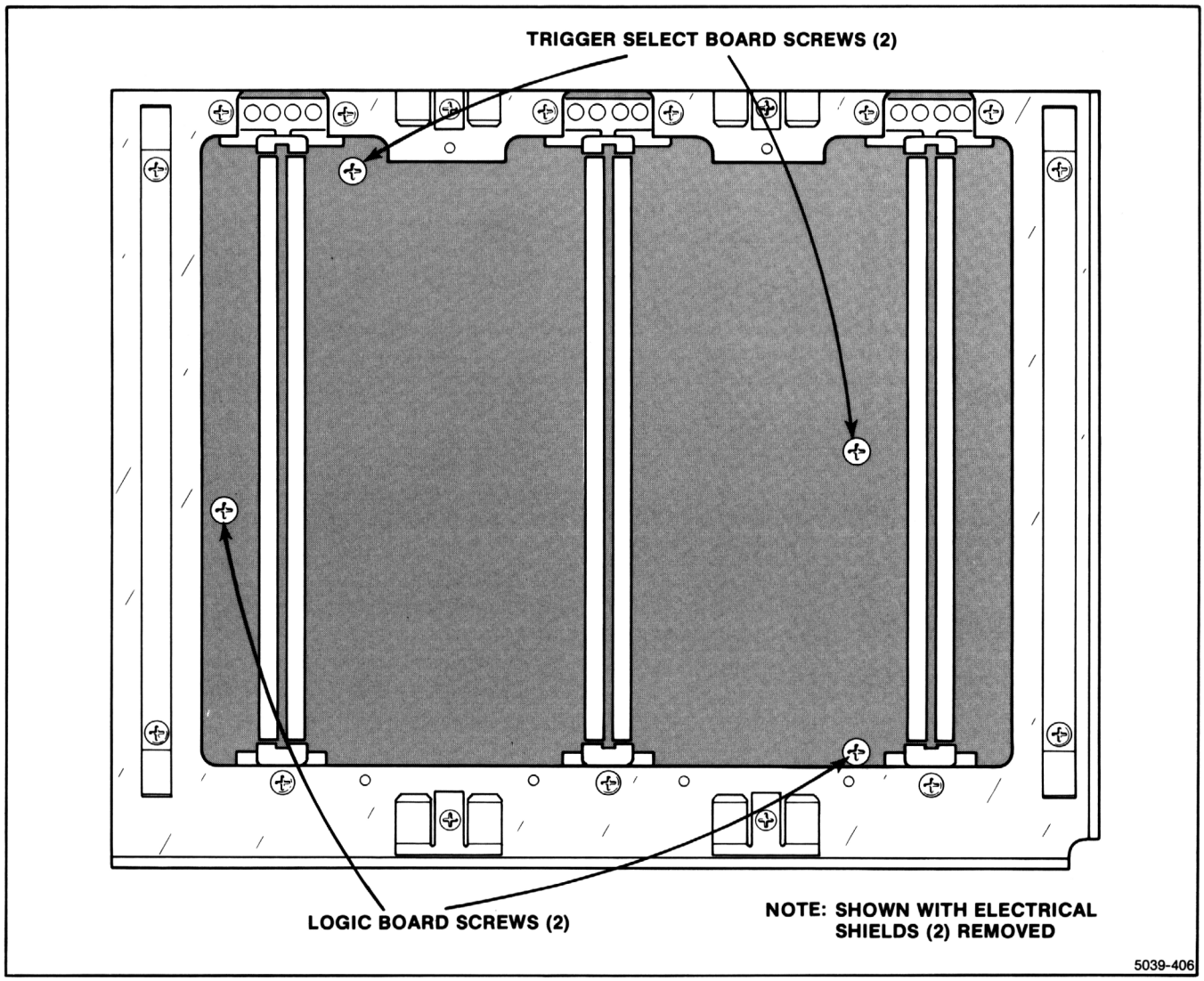


**Figure 4-13. Screws that fasten the Plug-On Boards to the A6 Interface Board.**

5. Replace the board by following the removal procedure in reverse order. Match the index arrows on the pin connectors to the correspondings arrow on the board. Correct location of the pin connectors is shown on the circuit board illustration in Section 8, Diagrams and Circuit Board Illustrations.

## A6 Interface Board

Remove and replace the A6 Interface Board as follows:

1. Remove the plug-in units.

2. Disconnect all connectors from the A6 Interface Board. Note the location of the connectors so they can be correctly replaced.

3. Remove the nine screws which fasten the plug-in interface connectors to the chassis (see Fig. 4-14).

4. Slide the Main Interface Board assembly to the rear of the instrument and remove it through the top of the instrument.

5. Replace the A6 Interface Board in the reverse order of removal. Match the index arrow on the pin connectors to the corresponding arrow on the board. Correct location of the pin connectors is shown in the circuit board illustrations in Section 8, Diagrams and Circuit Board Illustrations.

## A7/A8/A9/A10/A11/A12 Follower Boards

Follower circuit boards with four or six interface contacts are used in the plug-in interface connectors to provide optimum signal connections between the plug-in units and the R7103. Each Follower Board is held in place by a spring that permits the board to move back and forth in the interface connector to compensate for



http://manoman.sqhill.com

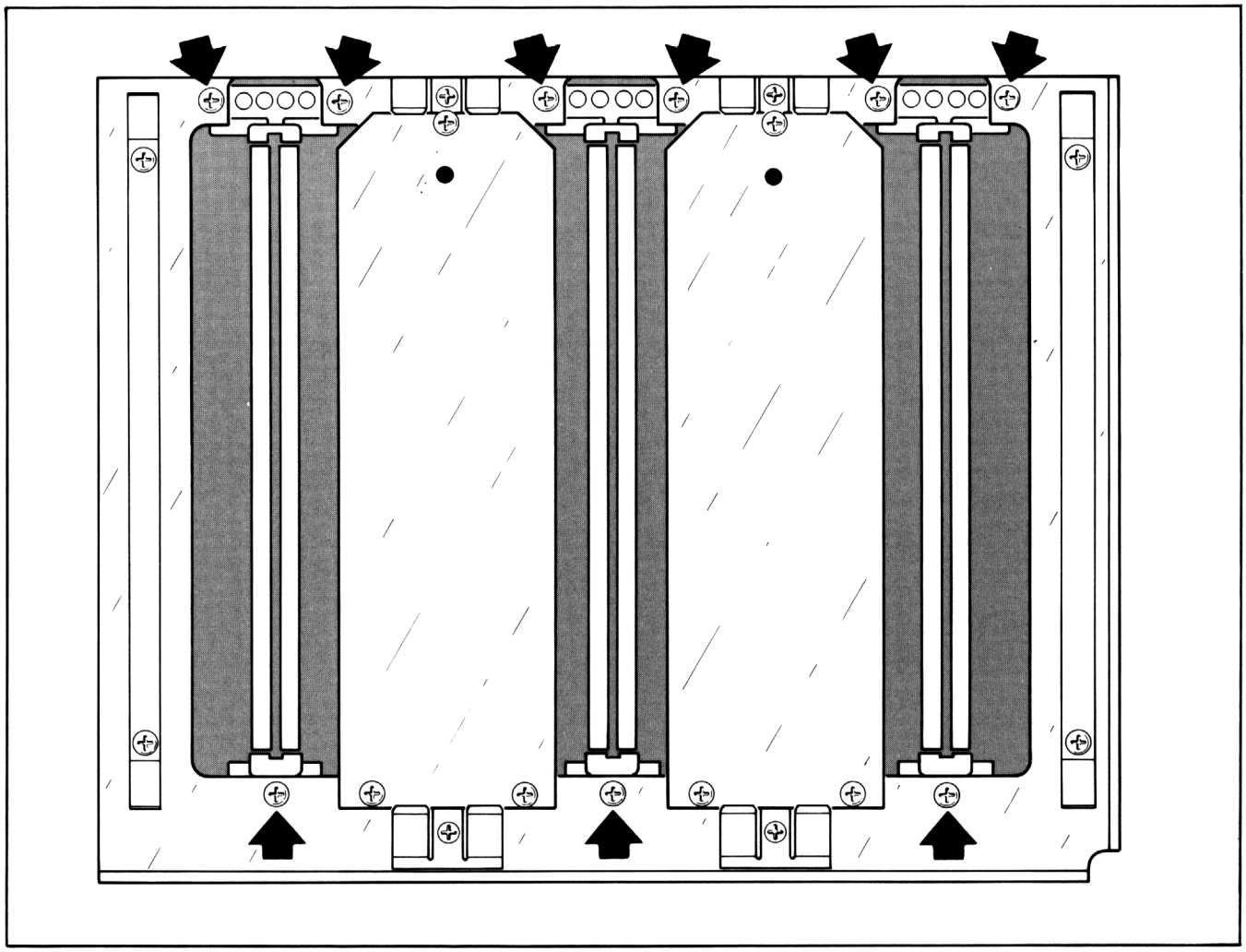

**Figure 4-14. Screws that retain the A6 Interface Board.**

length variances between plug-in units. If a contact on a Follower board is damaged, the entire board with contacts and interconnecting cables, is replaced as a unit.

Remove a Follower Board as follows:

1. Disconnect the R7103 from the power source and remove any plug-in units.

2. Remove the metal shields in front of the A6 Interface Board.

3. Disconnect the coaxial leads of the Follower Board from the A16 Vertical Channel Switch Board, and the A19 Horizontal Amplifier or A14 Trigger Selector Board. Note the location of the connectors so they may be correctly replaced.

4. Using long-nose pliers, disengage the spring from the Follower Board (spring is in front of A6 Interface Board).

5. Remove the Follower Board, with its interconnecting cables, from the rear of the interface connector, through the hole in the A6 Interface Board.

To replace a Follower Board, a folded length of very thin shim stock as wide as the Follower Board is required to compress the contacts while inserting the board into the interface connector. Proceed as follows:

1. Hold the Follower Board between the ends of the shim stock with the fold directly in front of the contacts. With the shim stock held against the sides of the board, the contacts on the sides of the board should be pressed together.

2. Insert the folded end of the shim stock (with the



http://manoman.sqhill.com

Follower board) into the rear of the interface connector through the hole in the A6 Interface Board. When the Follower Board contacts are almost fully inserted into the connector, hold the board in place and remove the shim stock through the front of the interface connector while fully inserting the Follower Board.

3. Secure the Follower Board with the spring.

4. Reconnect the Follower Board coaxial cables to the A16 Vertical Channel Switch or A19 Horizontal Amplifier Board and the A14 Trigger Selector Board.

5. Replace the metal shields.

## A25 Regulator Board

Remove and replace the A25 Regulator Board as follows:

1. Slide the power supply out of the instrument (see How to Remove the Power Supply, in this section).

2. Disconnect the multi-pin connectors from the board (two of the multi-pin connectors are self-locking; see the discussion on multi-pin connectors in this section). Note the location of the pin connectors so they may be correctly replaced.

**NOTE**

*If the A25 Regulator Board is to be removed to allow access to other parts of the power supply, perform steps 3 and 4 only. If the board is to be removed from the instrument, proceed with the remaining steps of the procedure.*

3. Remove the two screws located in the access holes under the A25 Regulator Board. These screws secure the chassis.

4. Remove the three screws securing the Regulator chassis to the rear heat sink. Remove the board with the chassis attached.

5. Remove the hardware securing the plastic-cased power transistors to the rear heatsink (see Fig. 4-15). Note the position of the lockwashers so they can be correctly replaced.

6. Remove the five securing screws and lift the board, with attached power transistors, from the chassis.

7. To replace the A25 Regulator Board, first apply a thin coat of silicone grease to the back (mounting surface) of each power transistor.

**WARNING**

*Handle silicone grease with care. Avoid getting silicone grease in your eyes. Wash hands thoroughly after using silicone grease.*

8. Place the A25 Regulator Board on the chassis. Replace, but do not tighten, the securing screws.

9. Check that the power transistors are aligned with their mounting screws and that the insulating washers are in place between the transistor cases and the rear heatsink.

10. Secure the transistors with the mounting hardware. Do not over-tighten the nuts; recommended torque is four to six inch-pounds.

11. Tighten the screws holding the A25 Regulator board to the chassis.

12. Install the chassis on the power supply.

13. Connect the multi-pin connectors to the board. Match the index arrow on the pin connectors to the corresponding arrow on the board. Correct location of the pin connectors is shown in the circuit board illustration in Section 8, Diagrams and Circuit Board Illustrations.

14. Replace the power-supply in the instrument.

## A24 Control Rectifier Board

An exploded-view drawing of the power supply is given in Section 9, Replaceable Mechanical Parts, at the rear of this manual. To remove the A24 Control Rectifier Board, use the following procedure:

1. Slide the power supply out of the instrument (see How to Remove the Power Supply, in this section).

2. Remove the A25 Regulator Board with attached chassis as described in A25 Regulator Board.

3. Remove the four screws that secure the power transformer to the bracket.

4. Remove the protective cover from the power supply (see Access to Components in the Power Supply, in this section).

5. Disconnect the multi-pin connectors, from the A24 Control Rectifier Board. Note the location of the pin connectors so they can be correctly replaced.



http://manoman.sqhill.com

6. Remove the two plastic screws which hold the circuit-board shield to the A23 Inverter Board.

7. Unsolder the three power-transformer leads from the A23 Inverter Board. Remove the excess solder from the board pads with a vacuum-type desoldering tool.

8. Remove the five securing screws from the A24 Control Rectifier Board.

9. Lift the circuit board and attached power transformer from the instrument.

10. To replace the A24 Control Rectifier Board, use the removal procedure in reverse order. Match the index arrow on the pin connectors to the corresponding arrow on the board. Correct location of the pin connectors is shown on the circuit board illustration in Section 8, Diagrams and Circuit Board Illustrations.

### A23 Inverter Board

An exploded-view drawing of the power supply is given in Section 9, Replaceable Mechanical Parts, at the rear of this manual. Remove and replace the power-supply A23 Inverter Board as follows:

**WARNING**

*The power supply has been tested at the factory to ensure safe operation. Improper repair of this unit can result in hazardous potentials on the instrument chassis. Do not remove the plate insulator, block insulator, or transistor shield from the heatsink. (See the exploded-view drawing of the power-supply unit for the location of the components.)*

1. Slide the power supply out of the instrument (see How to Remove the Power Supply, in this section).

2. Remove the protective cover from the power supply (see Access to Components in the Power Supply, in this section).

3. Remove the A24 Control Rectifier Board using the following procedure.

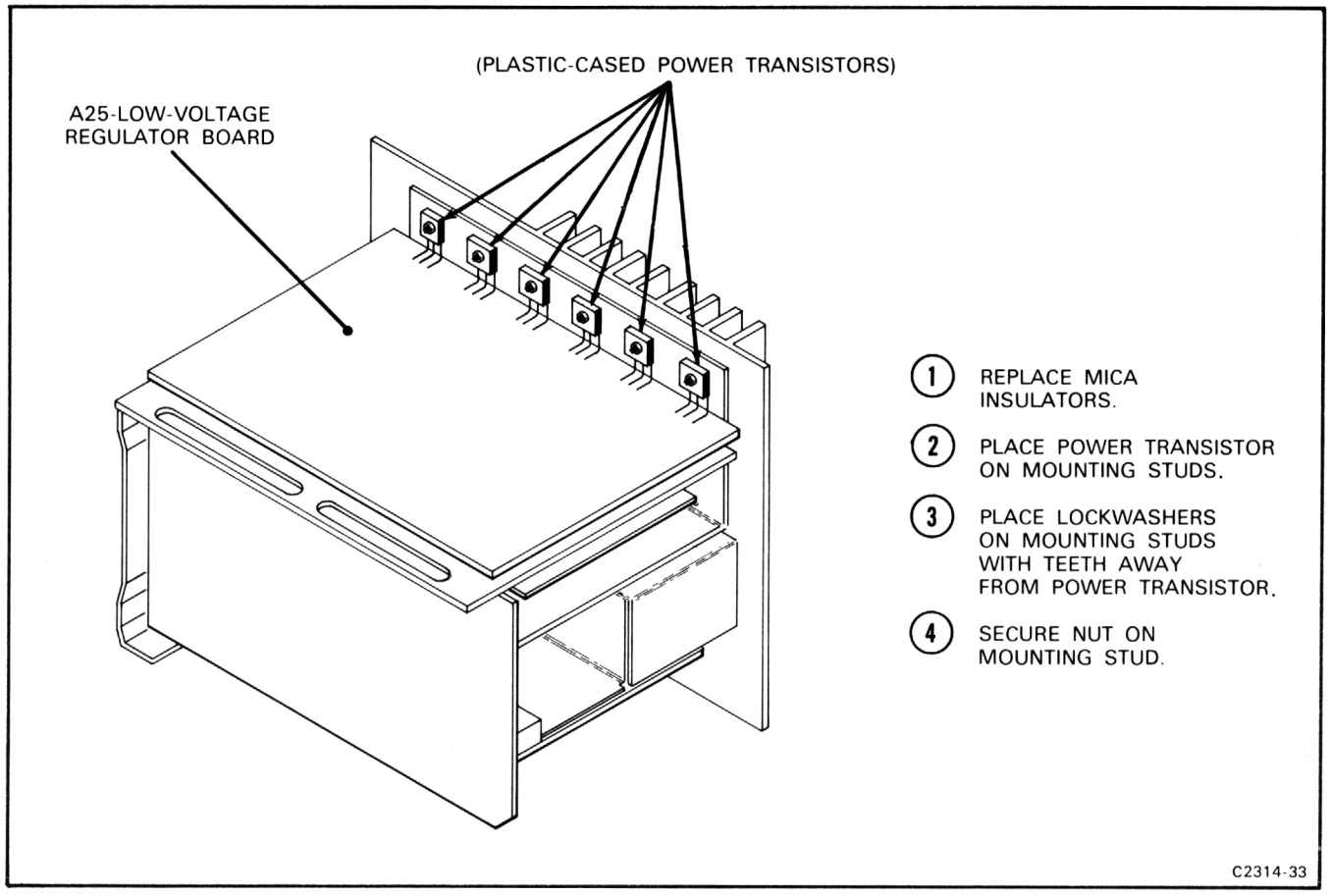


**Figure 4-15. Correct placement of power transistors and their mounting hardware on rear heat sink.**



http://manoman.sqhill.com

4. Remove the three securing screws from the A23 Inverter Board.

5. Unsolder the line-input leads from the circuit board. Remove the excess solder from these circuit board pads with a vacuum-type desoldering tool.

6. Remove the two metal-cased power transistors by removing the securing nuts and pulling the transistors from their sockets.

7. Move the A23 Inverter Board away from the heat-sink shield until the transistor mounting studs clear the heatsink shield. Remove the board from the power unit.

8. To replace the A23 Inverter Board, follow the removal procedure in reverse order. Match the index arrow on the pin connectors to the corresponding arrow on the board. Correct location of the pin connectors is shown on the circuit board illustration in Section 8, Diagrams and Circuit Board Illustrations.

## PLUG-IN INTERFACE CONNECTORS

The individual contacts of the plug-in interface connectors can be replaced. If several contacts are damaged, we recommend replacing the entire A6 Interface Board. An alternate solution is to have your local Tektronix Field Office repair or replace the damaged A6 Interface Board. Use the following procedure to remove and replace an individual contact of the plug-in interface connectors:

**NOTE**

*The plug-in interface contacts which are mounted on the Follower circuit boards cannot be replaced. A Follower Board with contacts and interconnecting cables is replaced as a unit. See Circuit Boards.*

1. Remove the A6 Interface Board from the instrument as previously described.

2. Snap the white plastic connector cover off the side of the damaged plug-in interface connector.

3. Unsolder and remove the damaged contact.

4. Install the replacement contact. Carefully position it to fit against the connector body.

5. Snap the white plastic connector cover back onto the plug-in interface connector. Check that the replaced contact is aligned with the other contacts.

6. Replace the A6 Interface Board.

## DELAY LINE REMOVAL

The vertical delay line is carefully matched at the factory. Therefore, it is recommended that repair not be attempted in the field. Instead, contact your local Tektronix Field Office.

## SEMICONDUCTORS

Semiconductors should not be replaced unless actually defective. If removed from their sockets during routine maintenance, return them to their original sockets. Unnecessary replacement of semiconductors may affect the adjustment of the instrument. When semiconductors are replaced, check the operation of circuits which may be affected.

**WARNING**

*To avoid electric shock hazard, always disconnect the R7103 from the power source before removing or replacing components.*

Replacement semiconductors should be of the original type or a direct replacement. Lead configurations of the semiconductors used in this instrument are shown in Figure 4-2. Some plastic-cased transistors have lead configurations which differ from those shown. If a replacement transistor is made by a different manufacturer than the original, check the manufacturer's basing diagram for correct basing. All transistor sockets in this instrument are wired for standard basing as used for metal-cased transistors. When removing soldered-on transistors, use a vacuum type desoldering tool to remove the solder from the circuit board pads. Transistors which have heat radiators or are mounted on the chassis use silicone grease to increase heat transfer. Replace the silicone grease on both sides of the insulating washer when replacing these transistors.

**WARNING**

*Handle silicone grease with care. Avoid getting the silicone grease in your eyes. Wash hands thoroughly after using silicone grease.*

To replace one of the power transistors mounted on the heatsink at the rear of the power supply, first remove the mounting hardware. Then, unsolder and remove the defective transistor. When replacing the transistor, be sure to install the insulating washer between the transistor and the heatsink (use silicone grease as previously described). Tighten the mounting nut just tight enough to hold the transistor in place. Then solder the replacement transistor to the A25 Regulator Board.



http://manoman.sqhill.com

An extracting tool should be used to remove in-line integrated circuits to prevent damaging the pins. This tool is available from Tektronix, Inc.; order Tektronix Part 003-0619-00. If an extracting tool is not available, use care to avoid damaging the pins. Pull slowly and evenly on both ends of the integrated circuit. Try to avoid disengaging one end from the socket before the other end.

## Hypcon Connectors

The hypcon (HYbrid-Printed CONnector) connector is a precision-made connector designed to provide low-loss electrical and thermally efficient connection between the printed circuit board and hybrid integrated circuit. Figure 4-16 shows an exploded view of the hypcon connector. Use care when replacing the hybrid ICs not to touch the elastomer gold-plated contacts with the fingers or to use a cleaner which will degrade contact reliability. The hypcon connector and hybrid IC should be removed if it becomes necessary to use a cleaning solvent near the connector when replacing adjacent (within 1/2") circuit board components. IMPORTANT: Remove all traces of solder flux or foreign material contamination from the circuit board contact area before replacing the connector. Contamination usually takes place during the soldering and cleaning process. Even when the soldering is done carefully, flux, oil, or other contaminants can be carried under the connector during the cleaning operation. When the solvent evaporates, nonconductive contaminants may remain on or near the contact interfaces.

The cleaning process (either hand cleaning with a solvent or machine cleaning in an automatic detergent wash) is not recommended for boards containing hypcon connectors.

If a component near a hypcon connector must be replaced, the following steps are recommended:

1. Remove the hybrid IC and hypcon connector (see Disassembly and Removal instructions) before any soldering or cleaning and store in a dirt-free covered container. When several hybrids and hypcon connectors are to be removed, keep parts in sets and do not interchange parts between sets.

2. Hand soldering:

   a. Use small diameter solder (0.030"-0.040").

   b. Use low-wattage soldering irons (15-20 watts).

   c. Use care with solder amount and placement.

3. Remove solder flux and contact contamination with isopropyl alcohol or denatured ethyl alcohol.

4. Flush the hybrid and hypcon connector mounting area with isopropyl alcohol. Do not scrub with a cotton-tipped applicator, as cotton fibers will adhere to edges and surfaces of contact areas and cause open or intermittent connections. The elastomer should be examined under light for dust, hair, etc., before it is re-installed. If the etched circuit board surfaces require more cleaning, scrub with a soft rubber eraser and blow or vacuum clean while dusting surface with a small clean brush.

5. If the hybrid IC and elastomer contact holder are contaminated, clean the contact holder and hybrid by flushing or spraying with alcohol and oven dry at 50° C. Do not scrub with a cotton-tipped applicator or similar device. If the contact holder is excessively contaminated, replace it with a new one.

Two inch-pounds of torque should be applied to the mounting screws to secure the hypcon to the circuit board.

Make sure that the elastomer is properly seated in the contact holder before remounting the assembly to circuit board. Exercise care when mounting the frame-elastomer connector holder-hybrid IC assembly to the circuit board to prevent misalignment between the connector and board.

**CAUTION**

*Because of close tolerances involved, special care must be taken to ensure correct index alignment of each hypcon part during reassembly. Failure to do so can result in a cracked hybrid substrate. See Figure 4-16A for index locations.*

If your instrument contains both the flush and stepped type of hypcon connectors be careful not to mix the elastomer contact holders during reassembly. The flush hypcon connectors have green elastomer contact holders and the plastic frame is marked FLUSH. The stepped hypcons have neutral-colored elastomer contact holders with a slight ridge or step on the contact surface; the large frames are marked STEPPED. The registration pins on the stepped plastic frame are slightly longer than those on the flush frame. The elastomer contact holder in the small stepped connectors is indexed differently than the large connectors. Look for a small gold arrow in one corner of the holder instead of a flat corner. Match this corner arrow with the pointed corner of the plastic frame. Give close attention to this indexing, as it is easy to insert the elastomer contact holder incorrectly.

Differences also exist between the large flush and large stepped hypcon circuit board receptacles. Figure 4-16A



http://manoman.sqhill.com

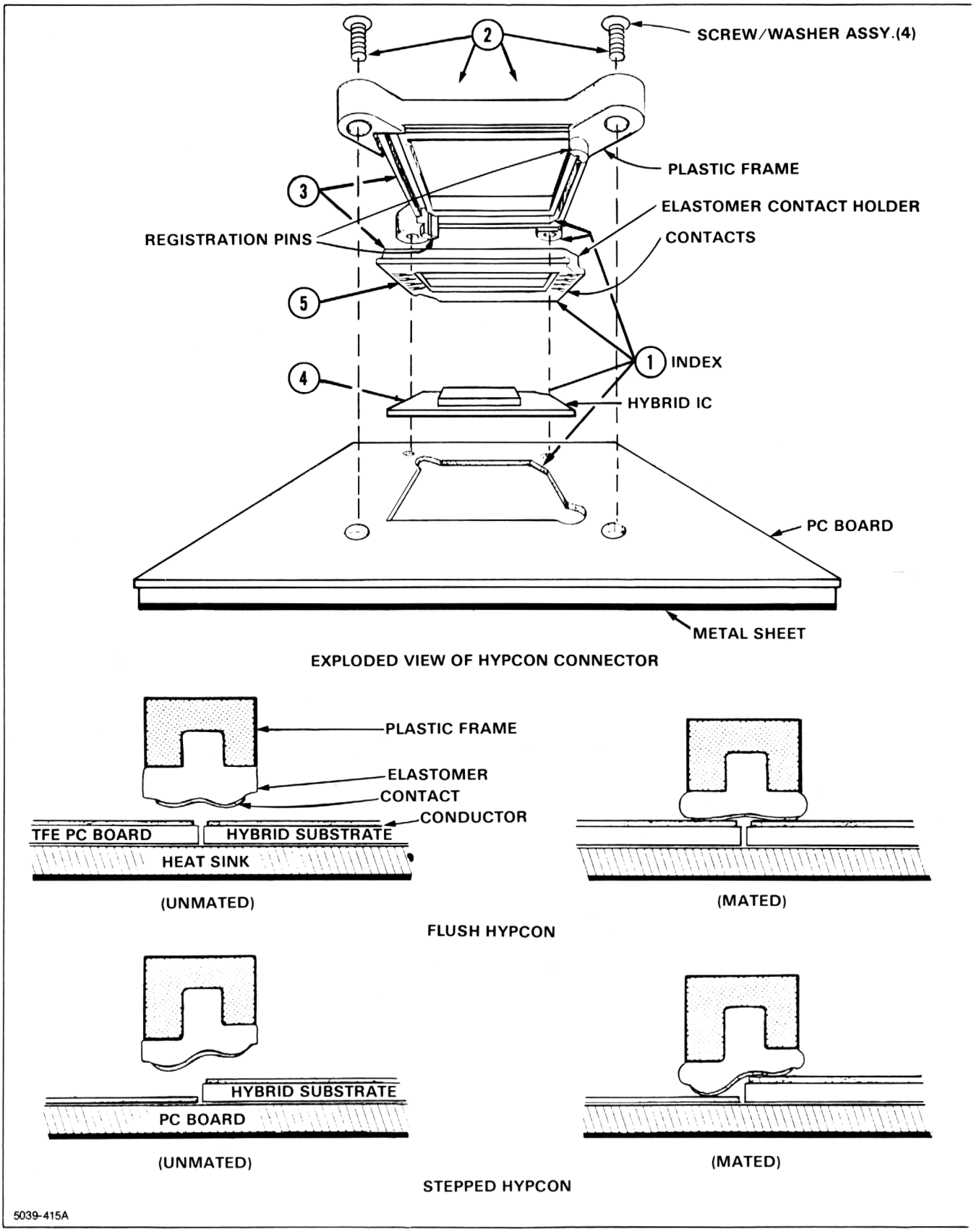


**Figure 4-16. How to remove and replace the Hypcon assemblies.**



http://manoman.sqhill.com

## DISASSEMBLY AND REMOVAL

(1) Note index on circuit board (arrow, triangle, or dot) and HYPCON plastic frame (pointed mounting ear).

(2) Unscrew and remove the 4 screw/washer assemblies. Where the HYPCON connector serves to heatsink the hybrid to the chassis, 2 of the 4 screws are longer. Note the location of the yellow tinted screws for proper replacement.

(3) Lift HYPCON connector from board.

(4) Note index location of hybrid and remove from board with tweezers.

(5) Note index location of elastomer contact holder and remove by grasping a corner of the contact holder with tweezers and lifting up. Do not touch the gold-plated contacts with your fingers.

## REASSEMBLY AND REPLACEMENT

Grasp corner of elastomer contact holder with tweezers and place in plastic frame slot being careful to match the flat contact holder with the flat frame corner. Place a clean plastic envelope over finger and press with finger to seat contact holder into the frame. The contact holder must be evenly seated on all four sides.

Flush HYPCON: Match hybrid flat corner with board receptable flat corner and place hybrid in receptable. Match pointed mounting ear of HYPCON connector with flat corner of receptacle and guide registration pins into the board hold.

Stepped HYPCON: Using tweezers, match the hybrid corner index with the elastomer contact holder index and insert between the registration pins. Turn the assembly over, grasp the hybrid "hat" with the tweezers, and guide the registration pins into the board holes. Match the plastic frame pointed mounting ear with the circuit board arrow.

Insert mounting hardware and apply 2 inch-pounds of torque to secure the connector assembly.

5039-415B

**Figure 4-16 (cont). How to remove and replace the Hypcon assemblies.**



http://manoman.sqhill.com

shows the cross-sectional differences which must be observed when working with an instrument that contains both types of hypcon connectors.

**CAUTION**

*Damage to the elastomer contact holder can result if the connectors are not mated properly with the board receptacle.*

*When replacing the hybrid, insert it into the board opening, then position the hypcon connector in the board registration holes for perfect alignment. The outer portion of the hypcon frame should be flush with the circuit board before the four mounting screws are tightened. Avoid touching the hybrid and elastomer contact holder with your fingers; finger oils can degrade reliability.*

A procedure for removal and replacement is included in Figure 4-16.

Hybrid substrate contact numbers 1 and 20 are printed on the substrate at the index corner. See Figure 4-2, semiconductor lead configurations.

## INTERCONNECTING PINS

Two methods of interconnection are used in this instrument to electrically connect the circuit boards with other boards and components. When the interconnection is made with a coaxial cable, a special end-lead connector plugs into a socket on the board. Other interconnections are made with a pin soldered into the board. Two types of connectors are used for these interconnecting pins. If the connector is mounted on a plug-on circuit board, a special socket is soldered into the board. If the connector is on the end of a lead, an end-lead pin connector is used which mates with the interconnecting pin. The following information provides the removal and replacement procedure for the various types of interconnecting methods.

### Coaxial-Type End-Lead Connectors

Replacement of the coaxial-type end-lead connectors requires special tools and techniques; only experienced maintenance personnel should attempt to remove or replace these connectors. We recommend that the damaged cable or wiring harness be replaced as a unit. For cable or wiring harness part numbers, see Section 9, Replaceable Mechanical Parts. An alternative solution is to refer the replacement of the defective connector to your local Tektronix Field Office or representative. Figure 4-17 gives an exploded view of a coaxial end-lead connector assembly.

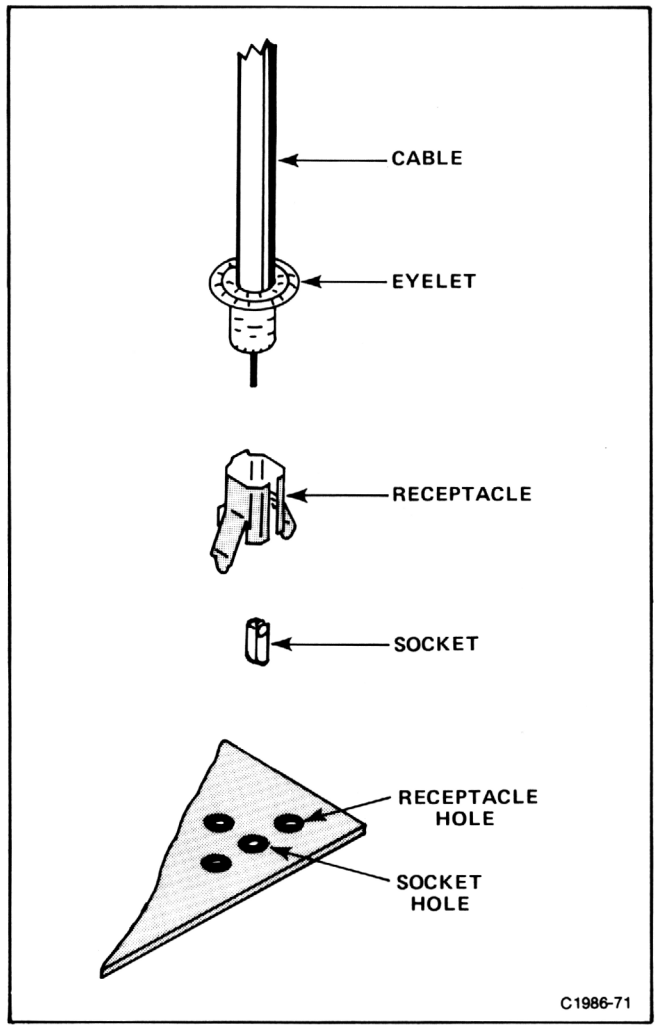


**Figure 4-17. Coaxial end-lead connector assembly.**

### Circuit-Board Pins

A circuit-board pin replacement kit (including necessary tools, instructions, and replacement pins with attached ferrules) is available from Tektronix, Inc. Order Tektronix Part 040-0542-01. Replacing circuit-board pins on multi-layer boards is not recommended. (The multi-layer boards in this instrument are listed under Soldering Techniques in this section.)

To replace a damaged pin, first disconnect any pin connectors. Then unsolder the damaged pin and pull it from the board with a pair of pliers, leaving the ferrule (see Fig. 4-18) in the circuit board if possible. If the ferrule remains in the circuit board, remove the spare ferrule from the replacement pin and press the new pin into the hole in the circuit board. If the ferrule is removed with the damaged pin, clean out the hole using an anti-static vacuum-type desoldering tool (see Soldering Techniques). Then press the replacement pin, with attached spare ferrule, into the circuit board.



http://manoman.sqhill.com

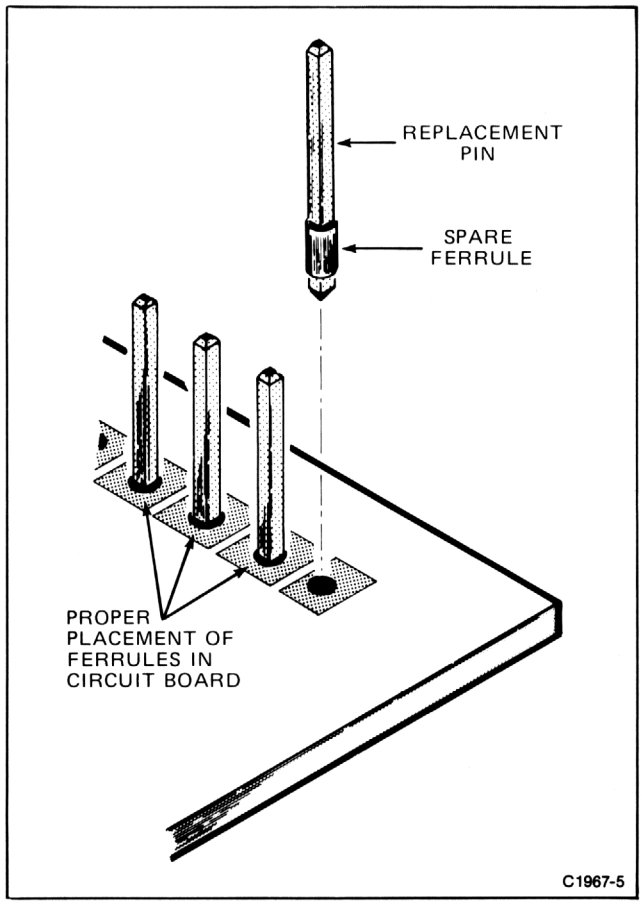


**Figure 4-18. Exploded view of circuit-board pin and ferrule.**

Position the replacement pin in the same manner as the original. Solder the pin to the circuit board on each side of the board. If the original pin was bent at an angle to mate with a connector, carefully bend the new pin to the same angle. Replace the pin connector.

### Circuit-Board Pin Sockets

The pin sockets on the circuit boards are soldered to the back of the board. To remove or replace one of these sockets, first unsolder the pin (use a vacuum-type desoldering tool to remove excess solder). Then straighten the tabs on the socket and remove the socket from the board. Place the new socket in the circuit board hole and press the tabs down against the board. Solder the tabs of the socket to the circuit board; be careful not to get solder inside the socket.

**NOTE**

*The spring tension of the pin sockets ensures a good connection between the circuit board and the pin. This spring tension can be destroyed by using the pin sockets as connecting points for spring-loaded probe tips, alligator clips, etc.*

### Multi-Pin Connectors

The pin connectors used to connect the wires to the interconnecting pins are clamped to the ends of the associated leads. To remove or replace damaged multi-pin connectors, remove the old pin connector from the end of the lead and clamp the replacement connector to the lead.

**NOTE**

*Some multi-pin connectors are equipped with a special locking mechanism. These connectors cannot be removed by pulling on the wire(s). To remove the connectors from the pin(s) grasp the plastic holder and pull.*

*To remove an individual wire from the holder, use a sharp pointed tool (such as a scribe) to lift the holding tab. Then withdraw the connector from the holder.*

Some of the pin connectors are grouped together and mounted in a plastic holder; the overall result is that these connectors are removed and installed as a multi-pin connector (see Troubleshooting Aids). If the individual end-lead pin connectors are removed from the plastic holder, note the order of the individual wires for correct replacement in the holder.

## PUSHBUTTON SWITCHES

The pushbutton switches used in the R7103 Oscilloscope are circuit-board mounted. First remove the associated circuit board following the procedure given under Circuit Boards in this section. Figure 4-19 gives removal and replacement instructions for pushbutton switches.

## GRATICULE LIGHT BULBS

To remove or replace the graticule light bulbs, first remove the plastic crt mask, light filter, and metal light shield. Pull on the white tabs to remove the graticule lamp assembly. Next, slide the retaining strip off to the side of the damaged bulb base. Pull the bulb out of the circuit board. Reverse the order of removal for replacement.

## POWER TRANSFORMER

Replace the power transformer only with a direct replacement Tektronix transformer. Remove and replace the power transformer as follows:

1. Remove the A24 Control Rectifier Board as described under Circuit Boards in this section.
2. Remove the bracket which holds the transformer to the rear heatsink.
3. Unsolder the transformer leads from the circuit



http://manoman.sqhill.com

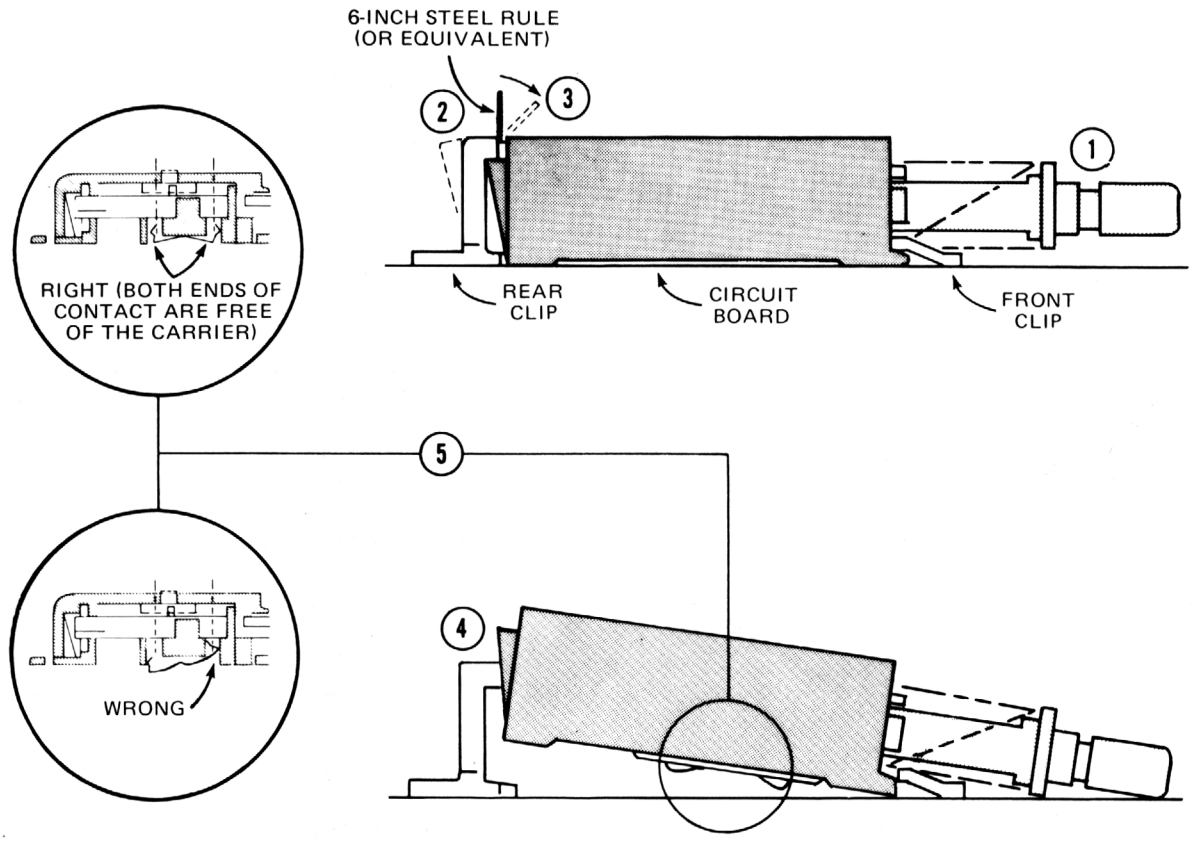


(1) Make sure that all switch shafts are in the OUT position to clear the rear clip.

(2) Place the long edge of a six-inch rule or similar thin straight edge between the top edge of the rear clip and the switch body.

(3) Carefully pry the rear clip back just far enough to push the steel rule down between the clip and switch body.

**CAUTION**

*When the switch is removed, the contacts may drop free and be damaged or lost. Body salts or acids can contaminate the switch contacts. Wear cotton gloves to prevent touching the contacts in the switch or on the board with bare hands.*

(4) Pull the rear of the switch up, remove the steel rule, and pull the switch out of the front clip.

(5) To replace the switch, first check that the slide contacts are properly installed in the carrier. Then, place the front of the switch into the front clip and push the rear of the switch down until the rear clip catches and holds the switch in place.

C1967-3

**Figure 4-19. How to remove and replace pushbutton switches.**



http://manoman.sqhill.com

boards. Remove the excess solder from the circuit-board pads (see Soldering Techniques). Note the position of the transformer leads so they may be correctly replaced.

4. Place the new transformer in position but do not solder the leads to the circuit-board pads.

5. Secure the bracket to the A24 Control Rectifier Board and attach the transformer to the bracket with the four securing screws.

6. Reposition the A24 Control Rectifier Board and secure with three screws. Attach the bracket securely to the rear heatsink.

7. Solder the transformer leads to the circuit-board pads.

8. Continue replacing the A24 Control Rectifier Board.

The line fuse used in the R7103 is located on the rear panel of the power supply. Replace the line fuse (F10) only with one of proper type and rating.

**NOTE**

*Line voltage fuse F10 is used for both 110 volt and 220 volt operation. No change in the fuse is necessary when switching the LINE VOLTAGE SELECTOR switch between 110 volts and 220 volts.*

## ADJUSTMENT AFTER REPAIR

After any electrical component has been replaced, the adjustment of that particular circuit should be checked, as well as the adjustment of any closely related circuits. Because the low-voltage supplies affect all circuits, adjustment of the entire instrument should be checked if component replacements have been made in these supplies or if the power transformer has been replaced. See section 5, Checks and Adjustment for a complete adjustment procedure.



http://manoman.sqhill.com

# CHECKS AND ADJUSTMENT

This section provides procedures for checking and adjusting the R7103. These procedures are designed to compare the performance of this instrument with other measurement instruments of known accuracy to detect, correlate, or eliminate by adjustment, any variation from the electrical specifications. These procedures also verify that the controls function properly.

The Checks and Adjustment section has two parts: Part I—Performance Check is provided for those who wish to verify that this instrument meets the applicable electrical specifications in section 1 without making internal adjustments. Part II—Adjustment and Performance Check provides a complete check and adjustment procedure in addition to verifying that the controls function properly. The procedures in Part I and Part II are written so that the entire instrument or any major circuit or part of a circuit can be checked or adjusted.

Table 5-1, Calibration Procedure Electives, lists the choices available and instructions for performing complete or partial calibration procedures. Also refer to page 5-2, Using These Procedures, for more detailed information.

**TABLE 5-1**
**Calibration Procedure Electives**

| Electives | Procedure |
|---|---|
| Functional Check | Perform Power-Up Sequence in Part II—Adjustment and Performance Check. Then proceed sequentially through subsections (A, B, C, etc.) to end. If a functional check only is desired, perform the Operators Checkout Procedure in Section 2. |
| Performance Check Only | Perform Power-Up Sequence in Part I—Performance Check Then proceed sequentially through subsections (A, B, C, etc.) to end. |
| Complete Calibration (Part II—Adjustment and Performance Check) | Perform Power-up Sequence for Part I—Performance Check Performance Check. Then proceed sequentially through subsections (A, B, C, etc.) to end. |
| Partial Part I—Performance Check or Part II—Adjustment and Performance Check by Subsection (A, B, C, etc.) | Perform Power-up Sequence for Part I—Performance Check or Part II—Adjustment and Performance Check. Perform Before You Begin and Preliminary Control Settings instructions for the desired subsection. Then proceed sequentially through the procedures in desired subsection. |
| Partial Part I—Performance Check or Partial Part II—Adjustment and Performance Check by Step (A1, A2, B1, B2, etc.) within Subsection (A, B, C, etc.) | Perform Power-Up Sequence for Part I—Performance Check or Part II—Adjustment and Performance Check. Perform Before You Begin and Preliminary Control Settings instructions for subsection (A, B, C, etc.) containing the desired step (A1, A2, B1, B2, etc.). Then proceed through the instructions (a, b, c, etc.) in the desired step.<br><br>**NOTE**<br>*Although a partial adjustment procedure may be done, we recommend that the entire subsection procedure be performed if any adjustments are made.* |



http://manoman.sqhill.com

## USING THESE PROCEDURES

**NOTE**

*In these procedures, capital letters within the body of the text identify front-panel controls, indicators and connectors on the R7103 (e.g., READOUT). Initial capitals identify controls, indicators, and connectors (e.g., Position) on associated test equipment used in this procedure. Initial capitals also identify adjustments inside the R7103 (e.g., Vert Gain).*

These procedures are divided into subsections by major functional circuits (e.g., A. Z-Axis And Display, B. Calibrator And Output Signals, etc.). The order in which the subsections and procedures appear is the recommended sequence for a complete performance check or adjustment and performance check of the instrument.

Each step contains the Setup Conditions which, if applicable, include control settings for the R7103, a test setup illustration, and test equipment control settings. The Setup Conditions are written so that, if desired, each subsection (A, B, C, etc.) or step (A1, A2, B1, B2, etc.) can be performed separately.

A heading system is provided to readily identify the steps (A1, A2, B1, B2, etc.) that contain performance check and/or adjustment instructions. For example, if CHECK is the first word in the title of a step, an electrical specification is checked. If ADJUST is the first word in the title, the step concerns one or more internal adjustments. If CHECK/ADJUST appears in the title, the step involves electrical specification checks and related adjustments. If EXAMINE is the first word in the step title, the step concerns measurement limits that indicate whether the instrument is operating properly; these limits are not to be interpreted as electrical specifications.

The alphabetical instructions under each step (a, b, c, etc.) may contain CHECK, EXAMINE, ADJUST, or INTERACTION as the first word of the instruction. These terms are defined as follows:

1. **CHECK**—indicates that the instruction accomplishes an electrical specification check. Each electrical specification checked is listed in Table 5-2, Performance Check Summary (see Performance Check Summary discussion for more information).

2. **EXAMINE**—usually precedes an ADJUST instruction and indicates that the instruction determines whether adjustment is necessary. If no ADJUST instruction appears in the same step, the EXAMINE instruction concerns measurement limits that have no related adjustment. Measurement limits following the word EXAMINE are not to be interpreted as electrical specifications. They are provided as indicators of a properly functioning instrument and to aid in the adjustment process.

3. **ADJUST**—describes which adjustment to make and the desired result. We recommend that the adjustments not be made if a previous CHECK or EXAMINE instruction indicates that no adjustment is necessary.

4. **INTERACTION**—indicates that the adjustment described in the preceding instruction interacts with other circuits. The nature of the interaction is described and reference is made to the step(s) affected.

## PERFORMANCE CHECK SUMMARY

Table 5-2, Performance Check Summary, lists the electrical specifications that are checked in Part I and Part II of this section. Table 5-2 is intended to provide a convenient means for locating the procedures in Part I and Part II that check and/or adjust the instrument to meet the applicable electrical specifications. For example: If the A25 Regulator Board has been repaired or replaced, use Table 5-2 to locate the electrical specifications affected by the repair or replacement. Then note the title of the procedure in Part I or Part II in which those specifications are checked and/or adjusted. Use the index provided at the front of Part I and Part II to find the page number of the desired procedures.



http://manoman.sqhill.com

**TABLE 5-2**
**Performance Check Summary**

| Characteristic | Performance Requirement | Part I Performance Check Procedure Title | Part II Adjustment and Performance Check Procedure Title |
|---|---|---|---|
| **VERTICAL MODE** | | | |
| Deflection Factor | Compatible with all 7000-series plug-in units. | Implicitly checked in step E1. Check Vertical Amplifier Gain. | Implicitly checked in step F2. Check/Adjust Vertical Amplifier Gain. |
| Difference Between Vertical Compartments | 1% or less. | | |
| Low-Frequency Linearity | 0.1 div or less compression or expansion of a center-screen 2 div signal positioned anywhere vertically within the graticule area. | E2. Check Vertical Low-Frequency Linearity. | F3. Check Vertical Low-Frequency Linearity. |
| Frequency Response | | Implicitly checked in step E3. Check Vertical Amplifier 1 GHz Gain. | Implicitly checked in step F6. Check Vertical Amplifier 1 GHz Gain. |
| Step Response | Varies with plug-in unit selected. See R7103 Oscilloscope Vertical System Specification, Table 1-7. | Does not normally require customer verification. However, risetime can be calculated from the Vertical Bandwidth. | |
| Isolation Between Vertical Compartments (eight-div signal) | | E4. Check Vertical Channel Isolation. | F7. Check Vertical Channel Isolation. |
| Left, Right, Alt Modes | At least 160:1 from dc to 100 MHz and at least 80:1 from 100 MHz to 1 GHz. | | |
| Delay Line | Permits viewing the leading edge of triggering signal. | Checked throughout procedure where single pulse is displayed on crt. | |
| Difference in Signal Delay Between Vertical Compartments | 50 ps or less. | Does not normally require customer verification; verified at the factory. | |
| Vertical Display Modes | Selected by front-panel VERTICAL MODE selector. | E5. Check Vertical Display Modes. | F8. Check Vertical Display Modes. |
| LEFT | Signal from left vertical unit displayed. | | |
| ALT | Display alternates between signals from Left and Right vertical units at rate determined by Horizontal plug-in unit. | | |



http://manoman.sqhill.com

**TABLE 5-2 (CONT)**
**Performance Check Summary**

| Characteristic | Performance Requirement | Part I Performance Check Procedure Title | Part II Adjustment and Performance Check Procedure Title |
|---|---|---|---|
| **VERTICAL MODE (CONT)** | | | |
| Vertical Display Modes (Cont) | | E5. Check Vertical Display Modes. | F8. Check Vertical Display Modes. |
| ADD | Display is algebraic sum of signals from Left and Right vertical units. | | |
| CHOP | Display chops between Left and Right vertical units asynchronously to horizontal plug-in unit. | | |
| Repetition Rate | 1 MHz within 20%. | Does not normally require customer verification. Satisfactory operation is substantiated by other tests. | |
| RIGHT | Signal from right vertical unit displayed. | E5. Check Vertical Display Modes. | F8. Check Vertical Display Modes. |
| **TRIGGERING SYSTEM** | | | |
| TRIGGER SOURCE | Selected by front-panel TRIGGER SOURCE buttons. Lights behind the buttons illuminate to indicate the trigger source. | C2. Check Trigger Selector Operation. | D3. Check Trigger Selector Operation. |
| VERT MODE | The trigger source is selected by the VERT MODE button. The source (sources) is (are) shown by the illumination of the LEFT VERT and RIGHT VERT trigger source buttons. The source follows (is same as) the Vert Display with the following two exceptions: | | |
| | **VERT MODE** / **Trigger Source**: CHOP / Left; ALT / Right trigger, then Left trigger | | |
| LEFT VERT | Trigger source: Left vertical unit; LEFT VERT trigger source button illuminated. | | |



http://manoman.sqhill.com

**TABLE 5-2 (CONT)**
**Performance Check Summary**

| Characteristic | Performance Requirement | Part I Performance Check Procedure Title | Part II Adjustment and Performance Check Procedure Title |
|---|---|---|---|
| **TRIGGERING SYSTEM (CONT)** | | | |
| TRIGGER SOURCE (Cont)<br>RIGHT VERT | Trigger source: Right vertical unit; RIGHT VERT trigger source button illuminated. | C2. Check Trigger Selector Operation. | D3. Check Trigger Selector Operation. |
| **HORIZONTAL SYSTEM** | | | |
| Deflection Factor | Compatible with all 7000-series plug-in units. | D1. Check Horizontal Amplifier Gain. | E1. Check/Adjust Horizontal Amplifier. |
| Gain Differences Between Horizontal Compartments | 1% or less. | | |
| DC Linearity | 0.05 division or less error at each graticule line after adjusting for no error at the second and tenth graticule line. | | |
| Fastest Calibrated Sweep Rate | 200 ps/division. | D2. Check High-Frequency Timing. | E2. Check/Adjust High-Frequency Timing. |
| Phase Shift Between Vertical and Horizontal Systems | 2° or less from dc to at least 50 kHz. | Satisfactory operation verified at the factory. | |
| Bandwidth | 350 MHz. | D3. Check Horizontal Bandwidth. | E3. Check Horizontal Bandwidth. |
| | **CALIBRATOR** | | |
| Wave Shape | Square wave. | B3. Check Calibrator Rise Time, Fall Time, and Duty Cycle. | C3. Check Calibrator Rise Time, Fall Time, and Duty Cycle. |
| Polarity | Positive going with base line at 0 volts. | | |
| Output Resistance | 450 Ω. | Satisfactory operation verified at the factory. | |
| Output Voltage | Selected by front-panel CALIBRATOR buttons. | B1. Check Calibrator Output Voltage. | C1. Check/Adjust Calibrator Output Voltage. |
| Into 100 kΩ or Greater | 40 mV, 0.4 V, 4 V. | | |
| Into 50 Ω | 4 mV, 40 mV, 0.4 V. | Satisfactory operation verified at the factory. | |



http://manoman.sqhill.com

**TABLE 5-2 (CONT)**
**Performance Check Summary**

| Characteristic | Performance Requirement | Part I Performance Check Procedure Title | Part II Adjustment and Performance Check Procedure Title |
|---|---|---|---|
| **CALIBRATOR (CONT)** | | | |
| Output Current | 40 mA available through CALIBRATOR output with optional bnc to current loop adaptor. CALIBRATOR switch must be set to 4 V for calibrated output. | Satisfactory operation verified at the factory. | |
| Amplitude Accuracy (P-P Voltage) | Within 1%. | B1. Check Calibrator Output Voltage. | C1. Check/Adjust Calibrator Output Voltage. |
| Repetition Rate | 1 kHz within 0.25% | B3. Check Calibrator Rise Time, Fall Time, and Duty Cycle. | C3. Check Calibrator Rise Time, Fall Time and Duty Cycle. |
| Duty Cycle | 49.8% to 50.2%. | | |
| Rise Time and Fall Time | 500 nsec or less into 100 pF or less. | | |
| **SIGNAL OUTPUTS** | | | |
| + SAWTOOTH OUT | | B4. Check Sawtooth Output Signal. | C4. Check Sawtooth Output Signal. |
| Source | HORIZ time-base. | | |
| Polarity | Positive-going with base-line at 0 V within 1 V into 1 MΩ. | | |
| Output Voltage | | Does not normally require customer verification. Satisfactory operation verified at the factory. | |
| Rate of Rise | | | |
| Into 50 Ω | 50 mV/unit of time selected by the time-base time/div switch, within 15%, 100 ns/div maximum sweep rate. | | |
| Into 1 MΩ | 1 V/unit of time selected by the time-base time/div switch, within 10%, 1 μsec/div maximum sweep rate. | B4. Check Sawtooth Output Signal. | C4. Check Sawtooth Output Signal. |
| Output Resistance | Approximately 950 Ω. | Does not normally require customer verification. Satisfactory operation verified at the factory. | |
| + GATE OUT | | B5. Check Gate Output Signal. | C5. Check Gate Output Signal. |
| Source | Gate, derived from HORIZ time-base main gate. | | |
| Polarity | Positive-going with base-line at 0 V within 1.0 V into 1 MΩ. | | |



http://manoman.sqhill.com

**TABLE 5-2 (CONT)**
**Performance Check Summary**

| Characteristic | Performance Requirement | Part I Performance Check Procedure Title | Part II Adjustment and Performance Check Procedure Title |
|---|---|---|---|
| **SIGNAL OUTPUTS** | | | |
| + GATE OUT (Cont) | | B5. Check Gate Output Signal. | C5. Check Gate Output Signal. |
| Output Voltage | | | |
| Into 50 Ω | 0.5 V within 10%. | | |
| Into 1 MΩ | 10 V within 10% (up to 1 sec/div sweep rate). | | |
| Rise Time into 50 Ω | 5 nsec or less. | | |
| Fall Time into 50 Ω | 15 nsec or less. | | |
| Output Resistance | Approximately 950 Ω. | | |
| SIG OUT | Selected by TRIGGER SOURCE buttons. | C2. Check Trigger Selector Operation. | D3. Check Trigger Selector Operation. |
| Source | Same as TRIGGER SOURCE. | | |
| Output Voltage | | Satisfactory operation verified at the factory | |
| Into 50 Ω | 25 mV/div or vertical deflection within 25%. | | |
| Into 1 MΩ | For a maximum output of ±2 V; 0.5 V/div of vertical deflection within 25%. | | |
| Bandwidth into 50 Ω | Varies with vertical plug-in selected. See R7103 Oscilloscope Vertical System Specification, Table 1-7. | | |
| Dc Centering | 0 V within 1 V into 1 MΩ. | C1. Check Vertical Signal Out Dc Centering. | D2. Check/Adjust Vertical Signal Out DC Centering. |
| Aberrations | 15% or less peak-to-peak within 20 ns of step. | Satisfactory operation verified at the factory. | |
| Output Resistance | Approximately 950 Ω. | | |



http://manoman.sqhill.com

**TABLE 5-2**
**Performance Check Summary**

| Characteristic | Performance Requirement | Part I Performance Check Procedure Title | Part II Adjustment and Performance Check Procedure Title |
|---|---|---|---|
| **READOUT DISPLAY** | | | |
| Readout Modes | | F1. Check Readout Modes. | G4. Check Readout Modes. |
| Free-Run (Not Labeled) | Continuously displayed. | | |
| PULSED | Single-shot operation. | | |
| Pulse Source | Selected by front-panel buttons.<br><br>+ GATE: Triggered by the trailing edge of the + GATE.<br><br>EXT: Controlled through rear-panel remote control connector.<br><br>MAN: Manual trigger, independent of other pulse sources. | | |
| **DISPLAY** | | | |
| Graticule | | B6. Check Graticule Illuminated Operation. | C6. Check Graticule Illuminated Operation. |
| Type | Internal, illuminated with variable edge lighting. | | |
| Lighting | | | |
| Normal | Continuously lighted. | | |
| PULSED | Single-shot operation. Lights are pulsed on for approximately 0.5 second. | | |
| Pulse Source | Selected by front-panel buttons.<br><br>+ GATE: Triggered by the trailing edge of the + GATE.<br><br>EXT: Controlled through rear-panel remote control connector.<br><br>MAN: Manual trigger, independent of other pulse sources. | | |



http://manoman.sqhill.com

**TABLE 5-2 (CONT)**
**Performance Check Summary**

| Characteristic | Performance Requirement | Part I Performance Check Procedure Title | Part II Adjustment and Performance Check Procedure Title |
|---|---|---|---|
| **DISPLAY (CONT)** | | | |
| Area | 8 × 10 div. (0.85 cm/div). | Checked at the factory. | |
| Phosphor | P31. | | |
| Vertical and Horizontal Resolution | 17 lines/div. | | |
| Limited Viewing Time Indicator | | Checked in the Operators Checkout Procedure, in Section 2. | |
| Steady Yellow | Crt display time is limited to about 20 min. | | |
| Flashing Yellow | Crt display time is limited to one minute or less and intensity is being limited. | | |
| Shutdown Indicator | | Checked in the Operators Checkout Procedure, in Section 2. | |
| Flashing Red | Crt will be shut off within 10 seconds. | | |
| Steady Red | Indicates crt display is shut off. | | |
| Geometry | Within 0.1 div of vertical and horizontal graticule lines. | A2. Check Geometry. | B5. Check/Adjust Geometry. |
| BEAMFINDER | When actuated, limits the display within the graticule area and defocuses the display. | Checked in the Operators Checkout Procedure in Section 2. | |
| Minimum Photographic Writing Speed | 20 cm/nsec (without blue filter).<br>Phosphor: Standard P31.<br>Camera: Tektronix C53; f/1.9 1:0.85 lens.<br>Film: Polaroid Type 107; 3000 ASA. | G1. Check Photographic Writing Rate. | H1. Check/Adjust Photographic Writing Rate. |
| **REMOTE CONNECTORS AND SWITCHES** | | | |
| Control Illumination | High, medium and off. (Three-position switch located on rear panel of power supply). | Checked in the Operators Checkout Procedure in Section 2. | |
| Camera Power | Three-contact connector compatible with Tektronix C-50 series cameras. | Implicitly checked in step G1. Check Photographic Writing Rate. | Implicitly checked in step H1. Check/Adjust Photographic Writing Rate. |



http://manoman.sqhill.com

**TABLE 5-2 (CONT)**
**Performance Check Summary**

| Characteristic | Performance Requirement | Part I Performance Check Procedure Title | Part II Adjustment and Performance Check Procedure Title |
|---|---|---|---|
| **REMOTE CONNECTORS AND SWITCHES (CONT)** | | | |
| Camera Power (Cont) | | Implicitly checked in step G1. Check Photographic Writing Rate. | Implicitly checked in step H1. Check/Adjust Photographic Writing Rate. |
| Bottom Pin | Ground | | |
| Center Pin | Single sweep reset. | | |
| Top Pin | +15 V. | | |
| SINGLE SWEEP RESET | Input to reset single-sweep function of time base installed in HORIZ compartment. Also resets Limited Viewing Time circuitry. | Does not normally require customer verification. Satisfactory operation verified at the factory. | |
| Signal Required | Closure to ground or switching from the high level (+50 V to +10 V; sink less than 40 μA) to the low level (+0.5 V to −5 V; sink less than 12 mA) in less than 1 msec; resets the sweep.<br><br>Compatible to 15 V open-collector TTL source. | | |
| Minimum Pulse Width | 10 μs at 50% amplitude points. | | |
| Maximum Safe Input Voltage | 50 V to −5 V (dc + peak ac). | | |
| SINGLE SWEEP READY | Bnc connector on rear panel. Remote ready indicator for HORIZ time base. | | |
| Output Signal | Open when not ready. +5 V at 47 Ω source impedance when ready. Output will light a No. 49 bulb. | | |
| GRAT/READOUT SINGLE SHOT | Bnc connector on rear panel. Switching to the low level (+1 V to −5 V; sink less than 2 mA) from the high level (+10 V to +15 V; sink less than 0.3 mA), in less than 1 μsec, triggers the Readout to display one complete | Does not normally require customer verification. Satisfactory operation verified at the factory. | |



http://manoman.sqhill.com

**TABLE 5-2 (CONT)**
**Performance Check Summary**

| Characteristic | Performance Requirement | Part I Performance Check Procedure Title | Part II Adjustment and Performance Check Procedure Title |
|---|---|---|---|
| **REMOTE CONNECTORS AND SWITCHES (CONT)** | | | |
| GRAT/READOUT SINGLE SHOT (Cont) | readout frame and the GRAT ILLUM (to be displayed for approximately 0.5 sec.).<br><br>Compatible to 15 V open collector TTL Source. | Does not normally require customer verification. Satisfactory operation verified at the factory. | |
| Maximum Open Circuit Voltage | +15 V. | | |
| Maximum Safe Input Voltage | +15 V to -5 V (dc plus peak ac). | | |
| Probe Power | Two probe power connectors on rear panel. | | |
| Pin 1 | +5 V. | | |
| Pin 2 | Chassis ground. | | |
| Pin 3 | -15 V. | | |
| Pin 4 | +15 V. | | |
| EXTERNAL Z-AXIS INPUT | Bnc connector on rear panel. | A3. Check External Z-Axis Operation | B7. Check External Z-Axis Operation. |
| Polarity and Sensitivity | Positive 2 V provides complete blanking from maximum intensity condition. Negative 2 V provides complete unblanking from minimum intensity condition. | | |
| Low Frequency Limit | Dc. | Does not normally require customer verification. Satisfactory operation verified at the factory. | |
| Input Resistance | Approximately 500 ohms. | | |
| Input Capacitance | Less than 50 pF. | | |
| Open Circuit Voltage | 0 V. | | |
| Maximum Safe Input Voltage | 15 V, dc plus peak ac. | | |
| Maximum Repetition Rate | 1 MHz. | | |



http://manoman.sqhill.com

**TABLE 5-2**
**Performance Check Summary**

| Characteristic | Performance Requirement | Part I Performance Check Procedure Title | Part II Adjustment and Performance Check Procedure Title |
|---|---|---|---|
| **POWER SOURCE** | | | |
| Voltage Range (AC, RMS) | Selected by rear-panel LINE VOLTAGE SELECTOR. | Does not normally require customer verification. Satisfactory operation verified by other tests. | |
| 115 V Rated | From 90 V to 132 V. | | |
| 230 V Rated | From 180 V to 250 V. | | |
| Line Frequency | From 48 Hz to 440 Hz. | Does not normally require customer verification. Satisfactory operation verified at the factory. | |
| Maximum Power Consumption | 165 W, worst case. | | |
| Maximum Current | 3.3 A at 60 Hz, 90 V line. 1.7 A at 60 Hz, 180 V line. | | |
| Fuse | 4 A fast blow. (For both LINE VOLTAGE SELECTOR ranges.) | | |

### ADJUSTMENT INTERVAL

To maintain instrument accuracy, check performance every 1000 hours of operation, or every 6 months if used infrequently. Before complete adjustment, thoroughly clean and inspect the R7103 as outlined in the Maintenance section.

### TEKTRONIX FIELD SERVICE

Tektronix Field Service Centers and the Factory Service Center provide instrument repair and adjustment services. Contact your Tektronix Field Office or representative for further information.

## TEST EQUIPMENT REQUIRED

The test equipment listed in Table 5-3 is required for a complete Adjustment and Performance Check of the R7103. If only a Performance Check is to be performed, the items required for Adjustment are not required and are indicated by footnote 1. The remaining test equipment is common to both procedures.

The specifications for test equipment given in Table 5-3 are the minimum required to meet the performance requirements. Detailed operating instructions for test equipment are omitted in these procedures. Refer to the test equipment instruction manual if more information is needed.

### SPECIAL FIXTURES

Special fixtures are used only where they facilitate instrument adjustment. These fixtures are available from Tektronix, Inc. Order by part number from Tektronix Field Offices or representatives.

### TEST EQUIPMENT ALTERNATIVES

All the listed test equipment is required to completely check and adjust the R7103. However, complete checking or adjusting may not always be necessary or desirable. You may be satisfied with checking selected characteristics only, thereby reducing the amount of test equipment actually required.

The Adjustment and Performance Check procedures in Part II are based on the first item of equipment given as an example. When other equipment is substituted, control settings or setups may need to be altered. If the exact item of equipment given as an example in Table 5-3 is not available, first check the Minimum Specifications column carefully to see if any other equipment might suffice. Then check the Purpose column to see where this item is used. If used for a performance check or adjustment that is of little or no importance for your measurement requirements, the item and corresponding step(s) can be deleted.



http://manoman.sqhill.com

**TABLE 5-3**
**Test Equipment**

| Description | Minimum Specifications | Purpose | Examples of Applicable Test Equipment |
|---|---|---|---|
| 1. Test Oscilloscope | Bandwidth, dc to 200 megahertz; minimum deflection factor, 10 millivolts/division; accuracy, within 3%. Dual-channel with an inverting input and both added and alternate vertical modes. | Used throughout calibration procedure. | a. TEKTRONIX 7704A Oscilloscope System with 7A18 and 7A29 Amplifier; 7B80 or 7B10 Time Base, and P6053B Probe.<br>b. TEKTRONIX 475 Oscilloscope with P6053B Probe.<br>c. Refer to the Tektronix Products catalog for compatible oscilloscope system. |
| 2. Amplifier | Tektronix 7A-series plug-in amplifier. | Used throughout procedure to provide vertical input to the instrument under test. | a. TEKTRONIX 7A29 Amplifier. |
| 3. Amplifier (dual-trace) | Tektronix dual-trace plug-in amplifier. Input impedance, 1 MΩ. | Used to check position and operation of readout display. | a. TEKTRONIX 7A18A or 7A26 dual-trace amplifier (may be shared with a 7000-series test oscilloscope). |
| 4. Time-Base (two required) | Any Tektronix 7B-series time base with a sweep rate of 200 ps/division. | Used throughout procedure to provide sweep. | a. TEKTRONIX 7B15 Time Base.<br>b. TEKTRONIX 7B10 Time Base. |
| 5. Signal Standardizer (two required) | Produces gain-check and pulse-response waveforms. | Used throughout procedure to standardize instrument so plug-in units can be interchanged without complete readjustment, and to adjust crt geometry. | a. Tektronix Calibration Fixture 067-0587-02.<br>b. 7000-series plug-in units with suitable signal sources may be substituted if lower performance is acceptable. |
| 6. Plug-In Extender[1] (Rigid Calibration Fixture) | Provides access to power supply voltages. | Power Supply Voltage, Trigger System check. and adjustment. | a. Tektronix Part 067-0589-00. |
| 7. Camera | f/1.9, 1:0.85 lens. | Check Photographic writing rate. | a. TEKTRONIX C-53 Oscilloscope Camera. |
| 8. Precision DC Voltmeter (DVM) | Range, -75 to +200 volts; accuracy, within 0.1%. | Check and adjustment of calibrator output accuracy, power supply voltages and Z-axis display voltages | a. TEKTRONIX DM 501A Digital Multimeter with power module.<br>b. Fluke Model 825A Differential DC Voltmeter. |
| 9. DC Voltmeter (VOM) with Test Leads | Range, to -2500 volts; accuracy, checked to within 1% at -2265 volts. | High-voltage power supply adjustment and geometry. | a. Valhalla Model 4500 H.V. Digital Multimeter Tektronix Part 003-0120-00. |

[1]**Used for Part II—Adjustment and Performance Check only; NOT used for Part I—Performance Check.**



http://manoman.sqhill.com

**TABLE 5-3 (CONT)**
**Test Equipment**

| Description | Minimum Specifications | Purpose | Examples of Applicable Test Equipment |
|---|---|---|---|
| 10. Time-Mark Generator | Marker outputs, 1 nanosecond to 0.1 second; marker accuracy, within 0.1%; trigger output, 1 millisecond. | Check and adjustment of horizontal timing, and calibrator frequency. | a. TEKTRONIX TG 501 Time-Mark Generator with power module. |
| 11. Low-Frequency Sine-Wave Generator | Frequency, 250 kilohertz to 250 megahertz; output amplitude, variable from 50 millivolts to 3 volts into 50 ohms. | Check and adjust horizontal bandwidth and external Z-axis input. | a. TEKTRONIX SG 503 Leveled Sine-Wave Generator with power module.<br>b. General Radio 1310-B Oscillator. |
| 12. High-Frequency Sine-WAve Generator | Frequency 245 megahertz to 1 gigahertz; reference frequency, 20 megahertz or lower; output amplitude, variable from 0.5 to 4 volts into 50 ohms; amplitude accuracy, constant within 1% of reference as output frequency changes. | Check and adjustment of vertical bandwidth and vertical channel isolation. | a. TEKTRONIX SG 504 Leveled Sine-Wave Generator.<br>b. Wiltron Model 610C Swept Frequency Generator with Model 61083C, 10 to 1220 megahertz plug-in. |
| 13. 10X Passive Probe[1] | Compatible with test oscilloscope to be used. | Used to check signals out, calibrator and Z-axis adjustment. | a. TEKTRONIX P6053B or P6054A Probe. |
| 14. 100X Probe | Compatible with test oscilloscope to be used; impedance, 5 kilohms. | Used to check Z-axis adjustment. | a. TEKTRONIX P6057 Probe. |
| 15. Coaxial Cable (two of each length required) | Impedance, 50 ohms; type, RG-58/U; length, 18 and 42 inches; connectors, bnc. | Signal interconnection. | a. Tektronix Part 012-0076-00 (18 inches) and Tektronix Part 012-0057-01 (42 inches). |
| 16. 2X Attenuator | Impedance, 50 ohms; 2X accuracy, within 2%, connectors, bnc. | Output termination for signal generators, if amplifier unit is not 50-ohm input impedance. | a. Tektronix Part 011-0069-02. |
| 17. Adapter, bnc 'T' | Connectors: bnc male, one; bnc female, two; | Used to check external Z-axis operation and X-Y compensation. impedance, 50 Ω. | a. Tektronix Part 103-0030-00. |
| 18. Nylon Tuning Tool[1] | 1-inch shaft. | Adjust vertical high-compensation. | a. Tektronix Part 003-0675-00. |
| 19. Screwdriver, low Capacitance[1] | 1-inch shaft. | Used throughout adjustment procedure to adjust variable components. | a. Tektronix Part 003-0000-00. |
| 20. Screwdriver[1] | Three-inch shaft, 3/32-inch bit. | Used throughout procedure | a. Xcelite R3323. to adjust variable resistors. |

[1]**Used for Part II—Adjustment and Performance Check only; NOT used for Part I—Performance Check.**



http://manoman.sqhill.com

# PART I—PERFORMANCE CHECK

The following procedure (Part I—Performance Check) verifies electrical specifications without removing instrument covers or making internal adjustments. All tolerances given are as specified in the Specification tables (section 1) in this manual.

Part II—Adjustment and Performance Check provides the information necessary to: (1) verify that the instrument meets the electrical specifications, (2) verify that all controls function properly, and (3) perform all internal adjustments.

A separate Operators Checkout Procedure is provided in section 2 for familiarization with the instrument and also to verify that all controls, indicators and connectors function properly.

**NOTE**

*Turn the R7103 off before installing or removing plug-in units.*

## INDEX TO PERFORMANCE CHECK PROCEDURE


A. Z-AXIS AND DISPLAY ..... 5-16
1. Check Trace Alignment ..... 5-16
2. Check Geometry ..... 5-17
3. Check External Z-Axis Operation ..... 5-17

B. CALIBRATOR AND OUTPUT SIGNALS ..... 5-18
1. Check Calibrator Output Voltage ..... 5-18
2. Check Calibrator 1 kHz Repetition Rate ... 5-19
3. Check Calibrator Rise Time, Fall Time, and Duty Cycle ..... 5-19
4. Check Sawtooth Output Signal ..... 5-20
5. Check Gate Output Signal ..... 5-21
6. Check Graticule Illumination Operation .... 5-21

C. TRIGGER SYSTEM ..... 5-22
1. Check Vertical Signal Out DC Centering .. 5-22
2. Check Trigger Selector Operation ..... 5-23

D. HORIZONTAL SYSTEM ..... 5-24
1. Check Horizontal Amplifier Gain ..... 5-24
2. Check High-Frequency Timing ..... 5-25
3. Check Horizontal Bandwidth ..... 5-25

E. VERTICAL SYSTEM ..... 5-26
1. Check Vertical Amplifier Gain ..... 5-26
2. Check Vertical Low-Frequency Linearity ... 5-27
3. Check Vertical Amplifier 1 GHz Gain ..... 5-27
4. Check Vertical Channel Isolation ..... 5-28
5. Check Vertical Display Modes ..... 5-29

F. READOUT SYSTEM ..... 5-30
1. Check Readout Modes ..... 5-30

G. PHOTOGRAPHIC WRITING RATE ..... 5-32
1. Check Photographic Writing Rate ..... 5-32


## PERFORMANCE CHECK POWER-UP SEQUENCE

**NOTE**

*The R7103's performance can be checked at any ambient temperature from 0° to +50° C unless otherwise stated. Adjustments must be performed at an ambient temperature from +20° to +30° C for specified accuracies.*

1. Check that the LINE VOLTAGE SELECTOR is set for the correct input line voltage.

2. Connect the instrument power cord to the power source.

3. Turn the instrument POWER on and allow at least 20 minutes before proceeding.



http://manoman.sqhill.com

# A. Z-AXIS AND DISPLAY

**Equipment Required:** (Numbers correspond to those listed in Table 5-3, Test Equipment.)

1. Test oscilloscope
3. Amplifier (1 MΩ input impedance)
4. Time base
15. Coaxial cables (two required)
17. Adapter, bnc "T"

BEFORE YOU BEGIN:

(1) Perform the Performance Check Power-Up Sequence.

(2) Refer to Section 6, Instrument Options, and the Change Information at the rear of this manual for any modifications which may affect this procedure.

## Z-AXIS AND DISPLAY PRELIMINARY CONTROL SETTINGS

POWER ..... On
VERTICAL MODE ..... LEFT
TRIGGER SOURCE ..... VERT MODE
INTENSITY ..... Fully counterclockwise
FOCUS ..... Midrange
READOUT INTENSITY ....OFF (in detent)
GRAT ILLUM ..... Midrange
BEAMFINDER ..... Pushbutton out

## A1. CHECK TRACE ALIGNMENT

**A1. SETUP CONDITIONS**

R7103 Controls:
No change in settings.

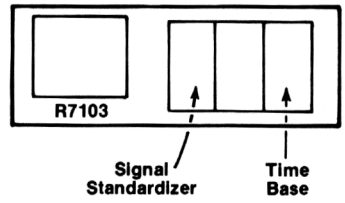


Test Equipment Controls:
Signal Standardizer
Test Selector ..... Vert or Horiz Aux In

Time Base
Time/Div ..... 1 ms
Magnifier ..... X1
Triggering ..... Auto, AC, Internal

5039-539

a. Set the INTENSITY control for a visible trace. Set the FOCUS and ASTIG controls for a well-defined trace.

b. Position the trace to the center graticule line.

c. **CHECK**—that the trace parallels the center graticule line within 0.1 division.

d. **ADJUST**—the front-panel TRACE ROTATION adjustment to align the trace with the vertical center graticule line.



http://manoman.sqhill.com

## A2. CHECK GEOMETRY

**NOTE**

*If the preceding step was not performed, first refer to the Z-Axis And Display Preliminary Control Settings, then proceed.*

**A2. SETUP CONDITIONS**

R7103 Controls:
VERTICAL MODE ..... ALT

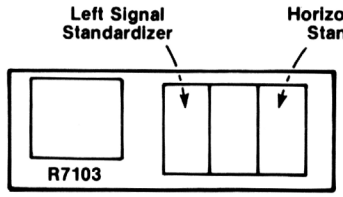


Test Equipment Controls:
Left Signal Standardizer
Test Selector ..... Vert or Horiz Gain
Rep Rate ..... 10 kHz

Horizontal Signal Standardizer
Test Selector ..... Vert or Horiz Gain
Rep Rate ..... 1 MHz

5039-540

a. Set the INTENSITY control for a visible display.

b. Set the FOCUS and ASTIG controls for a well-defined display.

c. **CHECK**—for a dot matrix whose dots can be set at the intersections of the graticule lines within 0.1 division.

## A3. CHECK EXTERNAL Z-AXIS OPERATION

**NOTE**

*If the preceding step was not performed, first refer to the Z-Axis And Display Preliminary Control Settings, then proceed.*

**A3. SETUP CONDITIONS**

R7103 Controls:
VERTICAL MODE ..... RIGHT

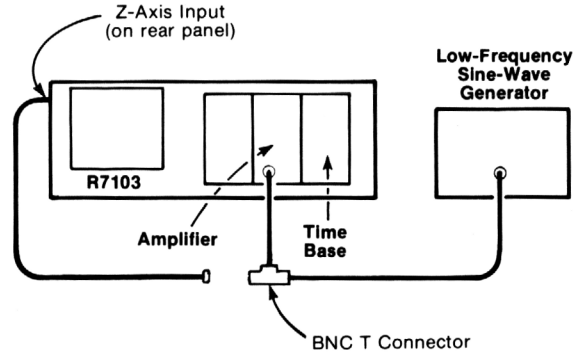


Test Equipment Controls:
Amplifier
Volts/Div ..... 0.5 V

Time Base
Time/Div ..... 20 μs
Triggering ..... Auto, AC, Internal

5039-541

a. Set the INTENSITY control for a dim display.

b. Set the low-frequency sine-wave generator for a four-division display at 50 kilohertz (the reference frequency). The four-division display indicates one volt above and below ground.

c. *Momentarily* connect the cable from the Z-AXIS INPUT connector on the rear panel to the bnc T connector at the input of the amplifier.

d. **CHECK**—that the positive portion of the displayed waveform is blanked while performing part c.



http://manoman.sqhill.com

# B. CALIBRATOR AND OUTPUT SIGNALS

**Equipment Required:** (Numbers correspond to those listed in Table 5-3, Test Equipment.)

1. Test oscilloscope
4. Time base
8. Precision DC Voltmeter (DVM)
10. Time-mark generator
15. Coaxial cable (one 18-inch, two 42-inch required)
17. Adapter, bnc T

BEFORE YOU BEGIN:

(1) Perform the Performance Check Power-Up Sequence.

(2) Refer to Section 6, Instrument Options, and the Change Information at the rear of this manual for any modifications which may affect this procedure.

## CALIBRATOR AND OUTPUT SIGNALS PRELIMINARY CONTROL SETTINGS

POWER ..... On
VERTICAL MODE .....RIGHT
TRIGGER SOURCE ..... VERT MODE
INTENSITY.....Fully counterclockwise
READOUT INTENSITY ....OFF (in detent)
GRAT ILLUM ..... Midrange
BEAMFINDER ..... Pushbutton out
CALIBRATOR .....4 V pushbutton in

## B1. CHECK CALIBRATOR OUTPUT VOLTAGE

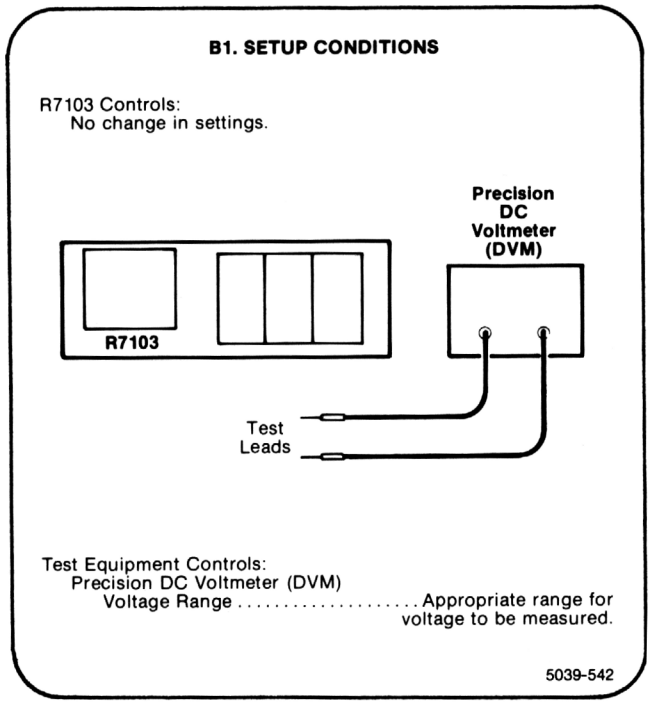


a. Press in both the 4 V and 0.4 V CALIBRATOR buttons.

b. Connect the precision dc voltmeter Volts/Ω lead to the CALIBRATOR output connector, and the Low lead to the R7103 front-panel ground lug.

c. **CHECK**—that the meter reading is 0.4008 volt, within the limits of 0.4004 to 0.4012 volt.



http://manoman.sqhill.com

## B2. CHECK CALIBRATOR 1 kHz REPETITION RATE

**NOTE**

*A frequency counter with an accuracy of at least 0.1% may be used to adjust the calibrator repetition rate.*

*If the preceding step was not performed, first refer to the Calibrator And Output Signals Preliminary Control Settings, then proceed.*

**B2. SETUP CONDITIONS**

R7103 Controls:
CALIBRATOR ..... 0.4 V pushbutton in

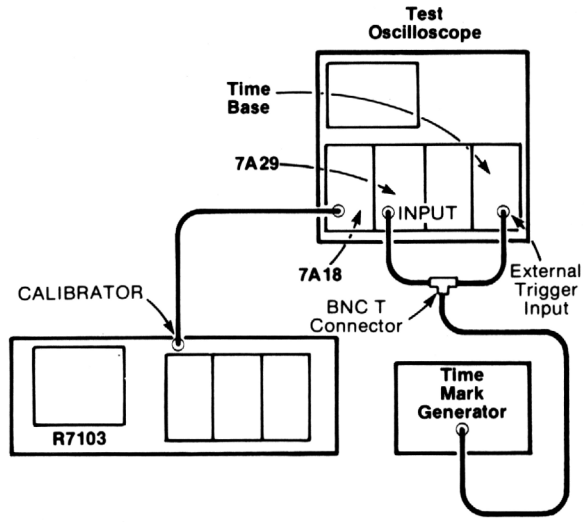


Test Equipment Controls:
Time-Mark Generator ..... 1 ms markers

Test Oscilloscope
Time/Div ..... 1 ms
Triggering ..... Auto, AC, External
Input Coupling ..... DC
Vertical Mode ..... Alt
Volts/Div
Left ..... 0.2
Right ..... 0.5

5039-543

a. Set the test oscilloscope Triggering Level for a stable time-mark display.

b. Observe that the 1 kHz Calibrator signal drifts across the crt of the test oscilloscope.

c. **CHECK**—that the time required for one cycle of the square-wave Calibrator signal to drift from one side of the display to the other side is 10 seconds or more.

## B3. CHECK CALIBRATOR RISE TIME, FALL TIME, AND DUTY CYCLE

**NOTE**

*If the preceding step was not performed, first refer to the Calibrator And Output Signals Preliminary Control Settings, then proceed.*

**B3. SETUP CONDITIONS**

R7103 Controls:
No change in settings.

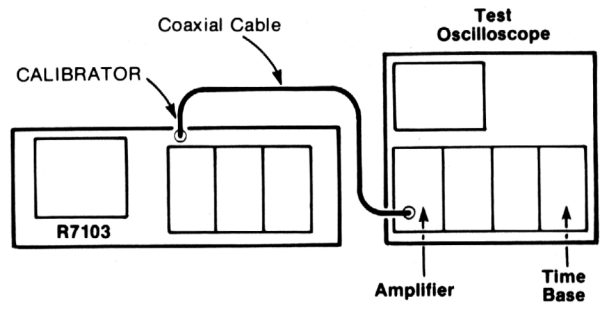


Test Equipment Controls:
Test Oscilloscope
Time/Div ..... 0.2 ms
Triggering ..... Auto, AC, Internal

5039-544

a. Connect the CALIBRATOR output to the inverting vertical input of the test oscilloscope.

b. Set the test oscilloscope vertical deflection to display four divisions of CALIBRATOR signal.

c. Set the time-base Time/Div to .1 $\mu$s.

d. Set the test oscilloscope for a stable display, triggered at the start of the calibrator signal.

e. **CHECK**—the displayed waveform for not more than five horizontal divisions between the 10% to 90% points of the waveform (rise time, 0.5 microsecond or less).

f. Set the time base Triggering Slope to minus.

g. Set the test oscilloscope for a stable display triggered on the negative transition of the waveform.

h. **CHECK**—the displayed waveform for not more than five divisions between the 90% and 10% points (fall time, 0.5 microsecond or less).



http://manoman.sqhill.com

i. Set the test oscilloscope as follows:

Time/div ..... 0.1 ms
Triggering
Mode ..... Auto
Coupling ..... AC
Source ..... Internal
Slope ..... +
Level ..... So that the display starts at the 50% point of the positive transition.

j. Set the test oscilloscope sweep magnifier to X10. Then move the display horizontally to align the negative transition of the waveform with the center vertical graticule line.

k. Set the test oscilloscope vertical to invert the display. (NOTE: The display is triggered on the opposite slope, even though the display appears the same.)

l. **CHECK**—that the 50% point on the falling edge of the waveform now displayed is within 0.2 horizontal division of the center line. (Indicates duty cycle of 50% within 0.2%.)

## B4. CHECK SAWTOOTH OUTPUT SIGNAL

**NOTE**

*If the preceding step was not performed, first refer to the Calibrator And Output Signals Preliminary Control Settings, then proceed.*

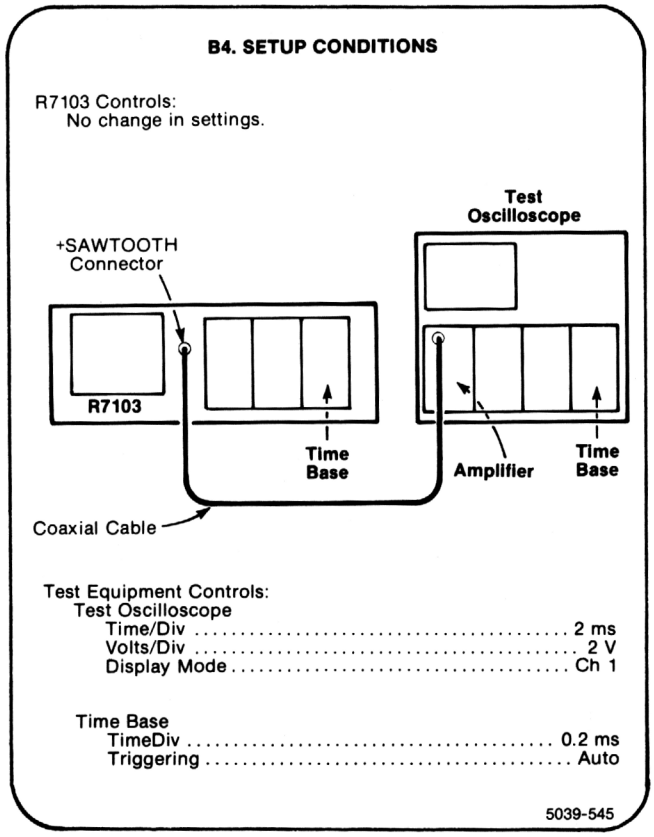


a. Connect the +SAWTOOTH output connector to the test oscilloscope channel 1 vertical input (1 megohm input).

b. **CHECK**—that 1) the slope of the test oscilloscope display is two volts/division within 10% (a 10-volt sawtooth signal is required to produce a 10-division sweep on R7103 crt), and that 2) the sawtooth baseline is within one volt of ground.



http://manoman.sqhill.com

## B5. CHECK GATE OUTPUT SIGNAL

**NOTE**

*If the preceding step was not performed, first refer to the Calibrator And Output Signals Preliminary Control Settings, then proceed.*

**B5. SETUP CONDITIONS**

R7103 Controls:
No change in settings.

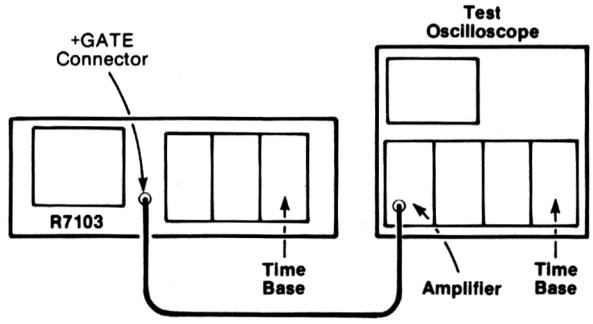


Test Equipment Controls:
Test Oscilloscope
Volts/Div ..... 2 V
Time/Div ..... 2 ms
Magnifier ..... X1

Time Base
TimeDiv ..... 0.2 ms
Triggering ..... Auto, AC, Internal

5039-546

a. **CHECK**—the test oscilloscope display for a gate waveform five divisions in amplitude, within 10%, and a baseline at zero volts, within one volt.

## B6. CHECK GRATICULE ILLUMINATION OPERATION

**NOTE**

*If the preceding step was not performed, first refer to the Calibrator And Output Signals Preliminary Control Settings, then proceed.*

**B6. SETUP CONDITIONS**

R7103 Controls:
GRAT ILLUM +GATE or EXT switch ..... +GATE

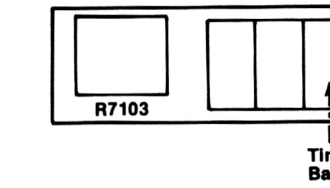


Test Equipment Controls:
Time Base
Time/Div ..... 0.2 s
Triggering ..... Auto, AC, Internal

5039-547

a. **CHECK**—that rotating the GRAT ILLUM control through its range varies the illumination of the graticule.

b. Set the GRAT ILLUM control fully clockwise to the PULSED detent position.

c. Set the INTENSITY control for a visible display.

d. **CHECK**—that the graticule is illuminated only after the time-base unit completes a sweep (adjust GRAT ILLUM PRESET, if necessary).

e. Set the GRAT ILLUM +GATE or EXT switch to EXT

f. **CHECK**—that pressing the GRAT ILLUM MAN pushbutton causes a momentary illumination of the graticule.

g. Set the GRAT ILLUM control to midrange (out of the PULSED detent position).



http://manoman.sqhill.com

# C. TRIGGER SYSTEM

**Equipment Required**: (Numbers correspond to those listed in Table 5-3, Test Equipment.)

1. Test oscilloscope
3. Amplifier (dual trace)
4. Time base
5. Signal standardizer (two required)
15. Coaxial cable (42-inch)

BEFORE YOU BEGIN:

(1) Perform the Performance Check Power-Up Sequence.

(2) Refer to Section 6, Instrument Options, and the Change Information at the rear of this manual for any modifications which may affect this procedure.

## TRIGGER SYSTEM PRELIMINARY CONTROL SETTINGS

POWER ..... On
VERTICAL MODE .....RIGHT
TRIGGER SOURCE ..... VERT MODE
INTENSITY .....Fully counterclockwise
FOCUS..... Midrange
READOUT INTENSITY ....OFF (in detent)
GRAT ILLUM ..... Midrange
BEAMFINDER ..... Pushbutton out

## C1. CHECK VERTICAL SIGNAL OUT DC CENTERING

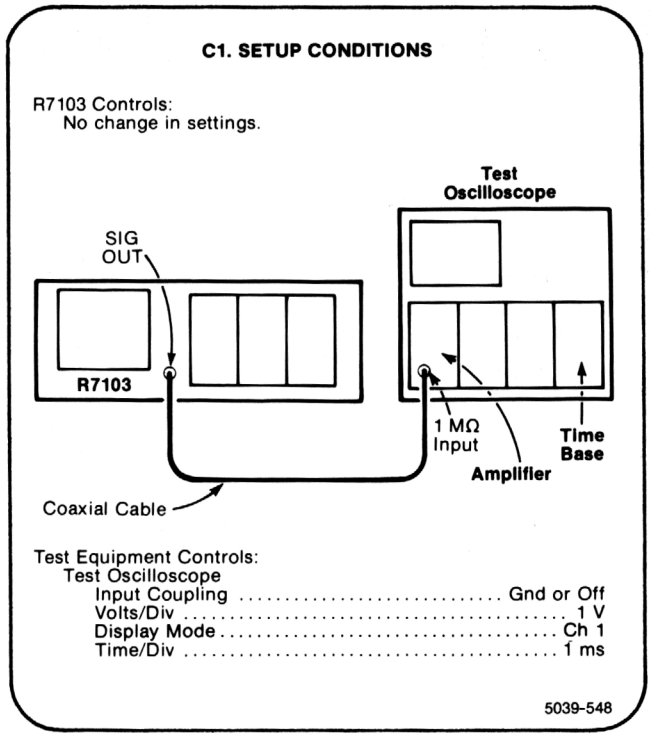


a. Establish a ground reference for the test oscilloscope by setting the trace to the graticule center line. Do not move the test oscilloscope position control after setting this ground reference.

b. Set the test oscilloscope input coupling switch to dc.

c. **CHECK**—the test oscilloscope display for a dc level within one division of the ground reference established in part a.



http://manoman.sqhill.com

## C2. CHECK TRIGGER SELECTOR OPERATION

**NOTE**

*If the preceding step was not performed, first refer to the Trigger System Preliminary Control Settings, then proceed.*

**C2. SETUP CONDITIONS**

R7103 Controls:
VERTICAL MODE ..... LEFT
TRIGGER SOURCE ..... VERT MODE

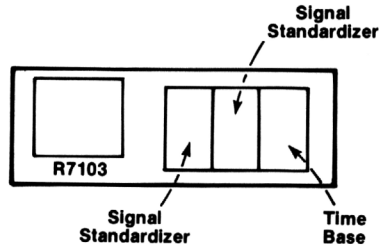


Test Equipment Controls:
Signal Standardizer (Right)
Test Selector ..... Vert or Horiz +Step Resp
Rep Rate ..... 10 kHz

Signal Standardizer (Left)
Test Selector ..... Vert or Horiz +Step Resp
Rep Rate ..... 1 kHz

Time Base
Time/Div ..... 0.2 ms
Magnifier ..... X1
Triggering ..... Auto, AC, Internal
Mode ..... Independent

5039-549

a. Set the INTENSITY control for a visible display. Set the signal standardizer Amplitude control for a two-division display in the upper half of the graticule area. Use the time-base Triggering Level control to trigger the display.

b. Set the VERTICAL MODE to RIGHT.

c. Set the signal standardizer Amplitude and Position controls for a two-division display in the lower half of the graticule area.

d. Set the VERTICAL MODE to ALT.

e. **CHECK**—the crt display for 1 kHz and 10 kHz triggered waveforms (adjust the time base Trigger Level controls as necessary).

f. Set the VERTICAL MODE to ADD.

g. **CHECK**—the crt display for a triggered waveform.

h. Set the VERTICAL MODE to CHOP.

i. **CHECK**—the crt display for a stable display of the 1-kHz waveform only.

j. Set the TRIGGER SOURCE to LEFT VERT.

k. **CHECK**—sequentially select all positions of the VERTICAL MODE selector (except RIGHT) and check for a stable display of the 1-kHz waveform only.

l. Set the TRIGGER SOURCE to RIGHT VERT.

m. **CHECK**—sequentially select all positions of the VERTICAL MODE selector (except LEFT) and check for a stable display of the 10-kHz waveform only.



http://manoman.sqhill.com

# D. HORIZONTAL SYSTEM

**Equipment Required:** (Numbers correspond to those listed in Table 5-3, Test Equipment.)

2. Amplifier
4. Time base
5. Signal standardizer
10. Time-mark generator
11. Low-frequency sine-wave generator
15. Coaxial cable (42-inch)

BEFORE YOU BEGIN:

(1) Perform the Performance Check Power-Up Sequence

(2) Refer to Section 6, Instrument Options, and the Change Information at the rear of this manual for any modifications which may affect this procedure.

## HORIZONTAL SYSTEM PRELIMINARY CONTROL SETTINGS

POWER ..... On
VERTICAL MODE .....RIGHT
TRIGGER SOURCE ..... VERT MODE
INTENSITY.....Fully counterclockwise
FOCUS..... Midrange
READOUT INTENSITY ....OFF (in detent)
GRAT ILLUM .....As desired
BEAMFINDER ..... Pushbutton out

## D1. CHECK HORIZONTAL AMPLIFIER GAIN

**D1. SETUP CONDITIONS**

R7103 Controls:
No change in settings.

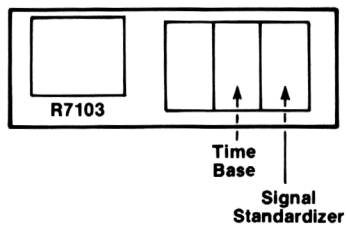


Test Equipment Controls:
Signal Standardizer
Test Selector ..... Vert or Horiz Gain
Rep Rate ..... 1 MHz

Time Base
Time/Div ..... 1 ms
Triggering ..... Auto, AC, Internal

5039-550

a. Set the INTENSITY control for a visible trace.

b. Use the signal standardizer Position control to align the bright vertical trace with the center vertical graticule line.

c. **CHECK**—for eight divisions of deflection between the center nine traces within 0.08 division.

d. **CHECK**—that the other vertical traces align with their respective graticule lines within 0.05 division.



http://manoman.sqhill.com

## D2. CHECK HIGH-FREQUENCY TIMING

**NOTE**

*If the preceding step was not performed, first refer to the Horizontal System Preliminary Control Settings, then proceed.*

**D2. SETUP CONDITIONS**

R7103 Controls:
No change in settings.

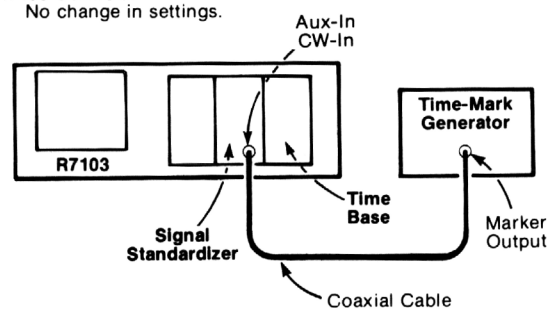


Test Equipment Controls:
Time Base
Time/Div ..... 1 ms
Triggering ..... Auto, AC, Internal
Mode ..... Independent

Signal Standardizer
Test Selector ..... Vert or Horiz Freq Resp

Time-Mark Generator ..... 1 ms markers

5039-551

a. Adjust the signal standardizer Amplitude control for two divisions of display. Set the INTENSITY control for a visible display, if necessary.

b. Set the time-base triggering controls for a stable display.

c. Position the first marker to the extreme left line on the graticule.

d. Set the time-base sweep calibration control for one marker at each major graticule division between the second and tenth graticule lines (center eight divisions).

e. **CHECK**—that the other time marks do not diverge from the graticule lines by more than 0.05 division.

**NOTE**

*If there are timing nonlinearities, refer to the time-base instruction manual for performance check or adjustment procedures for checking high-frequency timing and linearity.*

## D3. CHECK HORIZONTAL BANDWIDTH

**NOTE**

*If the preceding step was not performed, refer to the Horizontal System Preliminary Control Settings, then proceed.*

**D3. SETUP CONDITIONS**

R7103 Controls:
No change in settings.

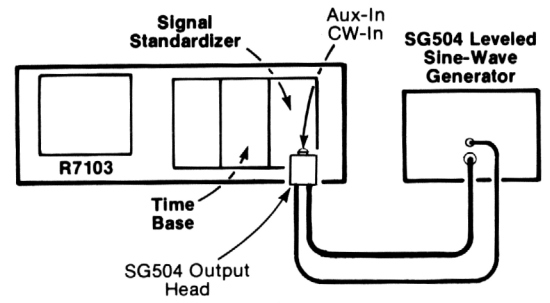


Test Equipment Controls:
Time Base
Time/Div ..... 1 ms
Triggering ..... Auto, AC, Internal

Signal Standardizer
Test Selector ..... Vert or Horiz Freq Resp

5039-552

a. Set the high-frequency sine-wave generator for eight divisions of displayed signal on the R7103 crt at the generator's reference frequency (6 MHz).

b. Set the high-frequency sine-wave generator output frequency to 350 MHz.

c. **CHECK**—that the 350 MHz display is at least 5.7 divisions in amplitude.



http://manoman.sqhill.com

# E. VERTICAL SYSTEM

**Equipment Required:** (Numbers correspond to those listed in Table 5-3, Test Equipment.)

2. Amplifier
4. Time base
5. Signal standardizer (two required)
11. Low-frequency sine-wave generator
12. High-frequency sine-wave generator

BEFORE YOU BEGIN:

(1) Perform the Performance Check Power-Up Sequence.

(2) Refer to Section 6, Instrument Options, and the Change Information at the rear of this manual for any modifications which may affect this procedure.

## VERTICAL SYSTEM PRELIMINARY CONTROL SETTINGS

POWER ..... On
VERTICAL MODE .....RIGHT
TRIGGER SOURCE ..... VERT MODE
INTENSITY ..... Midrange
FOCUS ..... Midrange
READOUT INTENSITY ....OFF (in detent)
GRAT ILLUM .....As desired
BEAMFINDER ..... Pushbutton out

## E1. CHECK VERTICAL AMPLIFIER GAIN

**E1. SETUP CONDITIONS**

R7103 Controls:
No change in settings.

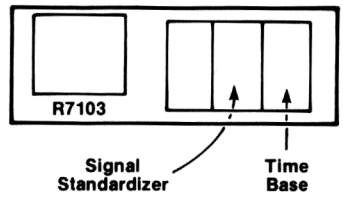


Test Equipment Controls:
Time Base
Time/Div ..... 1 ms
Triggering .....Auto, AC, External

Signal Standardizer
Test Selector ..... Vert or Horiz Gain
Rep Rate ..... 100 kHz

5039-553

a. Position the signal standardizer display to align the bright center trace with the graticule center line.

b. **CHECK**—for one trace per graticule division within 0.06 division over the center six graticule divisions. Note the exact error for comparison in part e.

c. Remove the signal standardizer from the RIGHT VERT compartment and install it in the LEFT VERT compartment.

d. Set the VERTICAL MODE switch to LEFT.

e. **CHECK**—for one trace per graticule division within 0.06 division of the error noted in part b, over the center six graticule divisions.



http://manoman.sqhill.com

## E2. CHECK VERTICAL LOW-FREQUENCY LINEARITY

**NOTE**

*If the preceding step was not performed, first refer to the Vertical System Preliminary Control Settings, then proceed.*

**E2. SETUP CONDITIONS**

R7103 Controls:
VERTICAL MODE ..... RIGHT

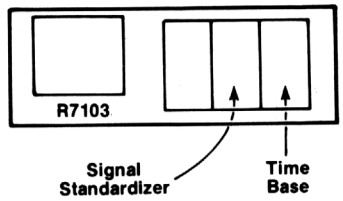


Test Equipment Controls:
Time Base
Time/Div ..... 1 ms
Triggering ..... Auto, AC, Internal

Signal Standardizer
Test Selector ..... Vert or Horiz +Step Resp
Rep Rate ..... 1 kHz

5039-554

a. Set the signal standardizer Amplitude and Position controls so the display is exactly two divisions in amplitude in the center of the graticule area.

b. **CHECK**—that moving the two-division display vertically causes no more than 0.1 division of compression or expansion anywhere within the graticule area.

## E3. CHECK VERTICAL AMPLIFIER 1 GHz GAIN (0° to +35°C)

**NOTE**

*If the preceding step was not performed, first refer to the Vertical System Preliminary Control Settings, then proceed.*

**E3. SETUP CONDITIONS**

R7103 Controls:
VERTICAL MODE ..... RIGHT

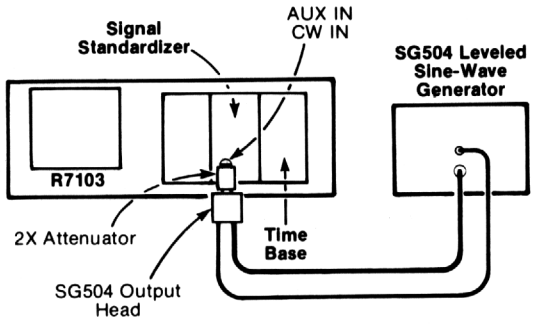


Test Equipment Controls:
Time Base
Time/Div ..... 0.1 ms
Triggering ..... Auto, AC, External

Signal Standardizer
Test Selector ..... Vert or Horiz Freq Resp

High-Frequency Sine-Wave Generator
Reference Frequency ..... 6 MHz

5039-555

a. Set the signal standardizer Amplitude control fully clockwise.

b. Connect the high-frequency sine-wave generator to the signal standardizer Aux In CW In (Freq Resp) input with a 2X attenuator.

c. Set the high-frequency sine-wave generator for a 10-division display at the reference frequency (between 6 and 50 megahertz) centered on the graticule. (To obtain a 10-division display, first set for eight divisions, then vertically position the display one division down and set the sine-wave generator to return the top of the display to the top of the graticule.)

d. Set the signal standardizer Amplitude control for a six-division display, centered on the graticule. (The CW Leveled indicator should be lit.)



http://manoman.sqhill.com

e. Without changing the output amplitude, increase the sine-wave generator frequency until the displayed amplitude is reduced to five divisions. If the CW Leveled indicator goes off, increase the amplitude of the sine-wave generator signal until the light just turns on.

**NOTE**

*The signal standardizer CW Leveled light must be on and the sine-wave generator must be properly connected for a valid check. Refer to the signal standardizer and high-frequency sine-wave generator manuals.*

f. **CHECK**—that the sine-wave generator frequency is 1 gigahertz or higher (verifies 1 gigahertz gain).

g. Move the signal standardizer to the LEFT VERT compartment (leave signal connected) and set the VERTICAL MODE switch to LEFT.

h. **CHECK**—Repeat parts d through f for the LEFT VERT compartment.

## E4. CHECK VERTICAL CHANNEL ISOLATION

**NOTE**

*If the preceding step was not performed, first refer to the Vertical System Preliminary Control Settings, then proceed.*

**E4. SETUP CONDITIONS**

R7103 Controls:
VERTICAL MODE ..... RIGHT

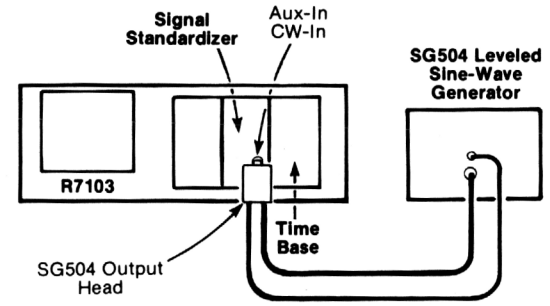


Test Equipment Controls:
Time Base
Time/Div ..... 1 ms
Triggering ..... Auto, AC, Internal

Signal Standardizer
Test Selector ..... Vert or Horiz Aux In

High-Frequency Sine-Wave Generator
Frequency ..... 1 GHz

5039-556

a. Set the output of the high-frequency sine-wave generator and the signal standardizer Amplitude control for eight divisions of deflection at one gigahertz.

b. Set the VERTICAL MODE to LEFT.

c. **CHECK**—the crt display amplitude for 0.1 division or less (this verifies isolation of at least 80:1 at 1 gigahertz).

d. Move the signal standardizer to the LEFT VERT compartment without disturbing the connections.

e. Set the VERTICAL MODE to RIGHT.

f. **CHECK**—the crt display amplitude for 0.1 division o less of the 1 gigahertz signal (verifies isolation of a least 80:1 at 1 gigahertz).

g. Set the VERTICAL MODE to LEFT.



http://manoman.sqhill.com

h. Connect the low-frequency sine-wave generator to the Aux In-CW In input of the signal standardizer.

i. Set the low-frequency sine-wave generator for eight divisions of deflection at 100 megahertz.

j. Set the VERTICAL MODE to RIGHT.

k. **CHECK**—for a display amplitude for 0.05 division or less of 100 megahertz signal (verifies 100 megahertz isolation of at least 160:1).

l. Move the signal standardizer to the RIGHT VERT compartment without disturbing the connections.

m. Set the VERTICAL MODE to LEFT.

n. **CHECK**—the crt display amplitude for 0.05 division or less of 100 megahertz signal (verifies isolation of at least 60:1 from dc to 100 megahertz).

## E5. CHECK VERTICAL DISPLAY MODES

**NOTE**

*If the preceding step was not performed, first refer to the Vertical System Preliminary Control Settings, then proceed.*

**E5. SETUP CONDITIONS**

R7103 Controls:
VERTICAL MODE ..... RIGHT

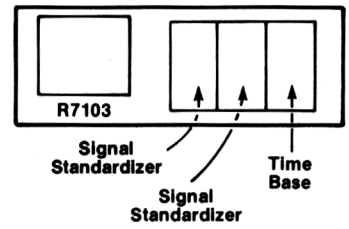


Test Equipment Controls:
Time Base
Time/Div ..... 1 ms
Triggering ..... Auto, AC, External

Signal Standardizer (Right)
Test Selector ..... Vert or Horiz + Step Resp
Rep Rate ..... 1 kHz

Signal Standardizer (Left)
Test Selector ..... Vert or Horiz + Step Resp
Rep Rate ..... 1 kHz

5039-557

a. Set the trace to the upper half of the graticule area with the right Position control.

b. Set the VERTICAL MODE to LEFT and position the trace to the lower half of the graticule area with the left Position control.

c. **CHECK**—the crt display for two traces in the ALT and CHOP positions of the VERTICAL MODE selector.

d. Set the VERTICAL MODE selector to ADD.

e. **CHECK**—the crt display for a single trace that can be positioned vertically with the left or right Position control.



http://manoman.sqhill.com

# F. READOUT SYSTEM

**Equipment Required:** (Numbers correspond to those listed in Table 5-3, Test Equipment.)

3. Amplifier (dual trace)
4. Time base

BEFORE YOU BEGIN:

(1) Perform the Performance Check Power-Up Sequence.

(2) Refer to Section 6, Instrument Options, and the Change information at the rear of this manual for any modifications which may affect this procedure.

## READOUT SYSTEM PRELIMINARY CONTROL SETTINGS

POWER ..... On
VERTICAL MODE .....RIGHT
TRIGGER SOURCE ..... VERT MODE
INTENSITY ..... Midrange
READOUT INTENSITY ....OFF (in detent)
GRAT ILLUM ..... Midrange
BEAMFINDER ..... Pushbutton out

## F1. CHECK READOUT MODES

**F1. SETUP CONDITIONS**

R7103 Controls:
No change in settings.

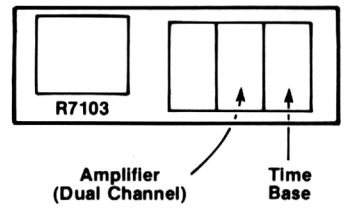


Test Equipment Controls:
Time Base
Time/Div ..... 1 ms
Triggering ..... Auto, AC, Internal

Amplifier
Display Mode ..... Alt

5039-558

a. Set the READOUT INTENSITY control for a visible display.

b. **CHECK**—set the time-base to several sweep rates throughout its range and check that the readout characters are displayed independently of the sweep rate.

c. Set the READOUT +GATE or EXT switch to +GATE and the READOUT INTENSITY control to PULSED.

d. Set the READOUT PRESET control for a visible readout display.

e. Set the time-base for a free-running (not triggered) sweep at a rate of 0.2 second/division.



http://manoman.sqhill.com

f. **CHECK**—that the readout characters are blanked while the sweep is running, and are displayed immediately after the end of the sweep; each character encoded by the plug-in units is displayed only once for each sweep.

g. Set the READOUT +GATE or EXT switch to EXT.

i. **CHECK**—that pressing the READOUT MAN pushbutton causes one frame of readout to be displayed.



http://manoman.sqhill.com

# G. PHOTOGRAPHIC WRITING RATE

**Equipment Required:** (Numbers correspond to those listed in Table 5-3, Test Equipment.)

2. Amplifier
4. Time base
7. Camera
12. High-frequency sine-wave generator

BEFORE YOU BEGIN:

(1) Perform the Performance Check Power-Up Sequence.

(2) Refer to Section 6, Instrument Options, and the Change Information at the rear of this manual for any modifications which may affect this procedure.

## PHOTOGRAPHIC WRITING RATE PRELIMINARY CONTROL SETTINGS

POWER ..... On
VERTICAL MODE .....RIGHT
TRIGGER SOURCE ..... VERT MODE
INTENSITY..... Counterclockwise
READOUT INTENSITY ... OFF (In detent)
GRAT ILLUM .....PULSED
BEAMFINDER ..... Pushbutton out

## G1. CHECK PHOTOGRAPHIC WRITING RATE

**G1. SETUP CONDITIONS**

R7103 Controls:
GRAT ILLUM +GATE or EXT .....+GATE

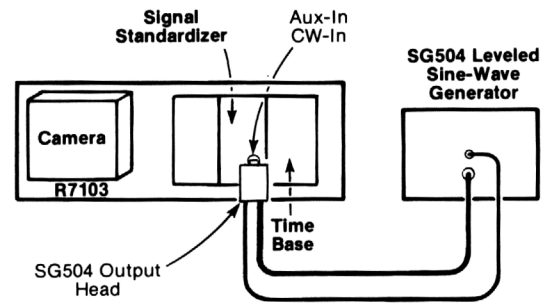


Test Equipment Controls:
Signal Standardizer
Test Selector ..... Vert or Horiz Aux In

Time Base
Time/Div .....5 ns
Triggering ..... Auto, AC, Internal
Magnifier ..... X10

High-Frequency Sine-Wave Generator
Frequency .....1 GHz

Camera
Mode.....Time
Aperture..... f 1.9

5039-559

**NOTE**

*Section 2, Operating Instructions, contains helpful information on obtaining waveform photographs; see Graticule Illumination, Light Filter, Readout Display and Display Photography.*

a. Set the INTENSITY control for a visible display.



http://manoman.sqhill.com

b. Set the time base sweep magnifier to X10.

c. Set the high-frequency sine-wave generator output amplitude to display a 7.5 division signal on the R7103 crt.

d. Set the time base triggering controls for a stable display.

e. Set the FOCUS and ASTIG controls for a well-defined display.

f. Set the time base to single-sweep mode.

g. Sequentially press the time base single sweep reset control and set the GRAT ILLUM PRESET control to illuminate the graticule.

h. Focus the camera.

i. Install 3000 ASA film in the camera and close the camera viewing port.

j. Rotate the INTENSITY control fully clockwise.

k. Press the camera shutter button.

l. Press the time base Single Sweep Reset button.

m. Press the camera shutter button.

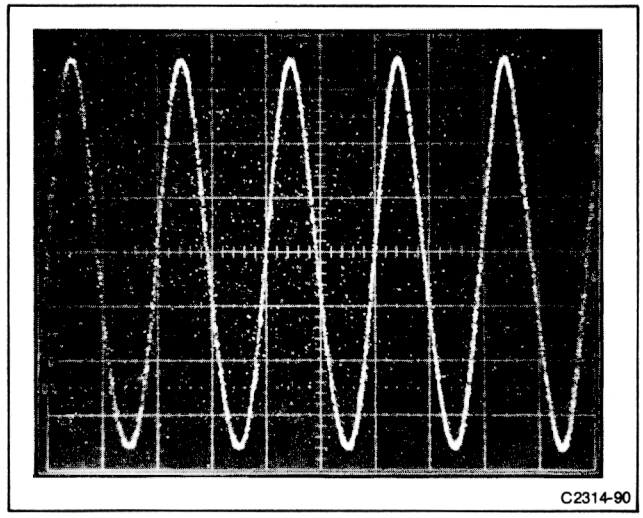


**Figure 5-1. Typical display of Photographic Writing Rate test.**

n. Develop film.

o. **CHECK**—that the photograph shows the 1 GHz sine-wave signal clearly (see Fig. 5-1 for typical photograph).

This concludes the Part I—Performance Check procedure.



http://manoman.sqhill.com

# PART II—ADJUSTMENT AND PERFORMANCE CHECK

The following procedure (Part II—Adjustment and Performance Check) provides the information necessary to: (1) verify that the instrument meets the electrical specifications, (2) verify that all controls function properly, and (3) perform all internal adjustments.

Part I—Performance Check verifies electrical specifications without removing instrument covers or making internal adjustments. All tolerances given are as specified in the Specification tables (section 1) in this manual.

A separate Operators Checkout Procedure is provided in the Operators Manual for familiarization with the instrument and also to verify that all controls, indicators and connectors function properly.

**NOTE**

*Turn the R7103 Power off before removing or installing plug-in units.*

## INDEX TO ADJUSTMENT AND PERFORMANCE CHECK PROCEDURE


A. POWER SUPPLY ..... 5-35
1. Adjust Inverter Control ..... 5-35
2. Adjust +50 Volt Power Supply ..... 5-36
3. Examine Power Supply Voltages ..... 5-36
B. Z-AXIS AND DISPLAY ..... 5-38
1. Adjust HV Supply ..... 5-38
2. Adjust CRT Grid Bias ..... 5-39
3. Adjust Z-Axis Amplifier ..... 5-40
4. Check/Adjust Trace Alignment ..... 5-41
5. Check/Adjust Geometry ..... 5-42
6. Adjust Auto Focus ..... 5-44
7. Check External Z-Axis Operation ..... 5-45
C. CALIBRATOR AND OUTPUT SIGNALS ..... 5-46
1. Check/Adjust Calibrator Output Voltage ..... 5-46
2. Check/Adjust Calibrator 1 kHz Repetition Rate ..... 5-47
3. Check Calibrator Rise Time, Fall Time, and Duty Cycle ..... 5-48
4. Check Sawtooth Output Signal ..... 5-49
5. Check Gate Output Signal ..... 5-49
6. Check Graticule Illumination Operation ..... 5-50
D. TRIGGER SYSTEM ..... 5-51
1. Adjust Trigger Selector Centering and Gain ..... 5-51
2. Check/Adjust Vertical Signal Out DC Centering ..... 5-53
3. Check Trigger Selector Operation ..... 5-54
E. HORIZONTAL SYSTEM ..... 5-55
1. Check/Adjust Horizontal Amplifier Gain ..... 5-55
2. Check/Adjust High-Frequency Timing ..... 5-56
3. Check Horizontal Bandwidth ..... 5-59
F. VERTICAL SYSTEM ..... 5-60
1. Adjust Vertical Amplifier Centering ..... 5-60
2. Check/Adjust Vertical Amplifier Gain ..... 5-61
3. Check Vertical Low-Frequency Linearity ..... 5-61
4. Adjust Thermal Compensations ..... 5-62
5. Adjust Vertical Low-Frequency Compensation ..... 5-63
6. Check Vertical Amplifier 1 GHz Gain ..... 5-64
7. Check Vertical Channel Isolation ..... 5-65
8. Check Vertical Display Modes ..... 5-66
G. READOUT SYSTEM ..... 5-67
1. Adjust Readout Vertical Separation, Centering, and Character Height ..... 5-67
2. Adjust Full-Character Scan ..... 5-68
3. Adjust Column and Row Match ..... 5-69
4. Check Readout Modes ..... 5-69
H. PHOTOGRAPHIC WRITING RATE ..... 5-70
1. Check/Adjust Photographic Writing Rate ..... 5-70


## ADJUSTMENT AND PERFORMANCE CHECK POWER-UP SEQUENCE

**NOTE**

*The performance of the R7103 can be checked at any ambient temperature from 0° to +50° C unless otherwise stated. Adjustments must be performed at an ambient temperature from +20° to +30° C for specified accuracies.*

1. Check that the LINE VOLTAGE SELECTOR is set to match the available line voltage.

2. Remove the top, bottom, and side cabinet panels to gain access to internal adjustments and test points.

3. Turn the instrument POWER switch on and allow at least 20 minutes warmup before proceeding.



http://manoman.sghill.com

# A. POWER SUPPLY

**Equipment Required:** (Numbers correspond to those listed in Table 5-3, Test Equipment.)

8. Precision dc voltmeter (DVM)
20. Screwdriver

BEFORE YOU BEGIN:

(1) Perform the Adjustment and Performance Check Power-Up Sequence.

(2) Refer to Section 6, Instrument Options, and the Change Information at the rear of this manual for any modifications which may affect this procedure.

(3) See the **Test Point and Adjustment Locations A** foldout page in Section 8, Diagrams and Circuit Board Illustrations.

## POWER SUPPLY PRELIMINARY CONTROL SETTINGS

POWER switch ..... On
READOUT INTENSITY ....OFF (in detent)
GRAT ILLUM ..... Counterclockwise
BEAMFINDER ..... Push button out
All other controls ..... No change

## A1. ADJUST INVERTER CONTROL (R93)

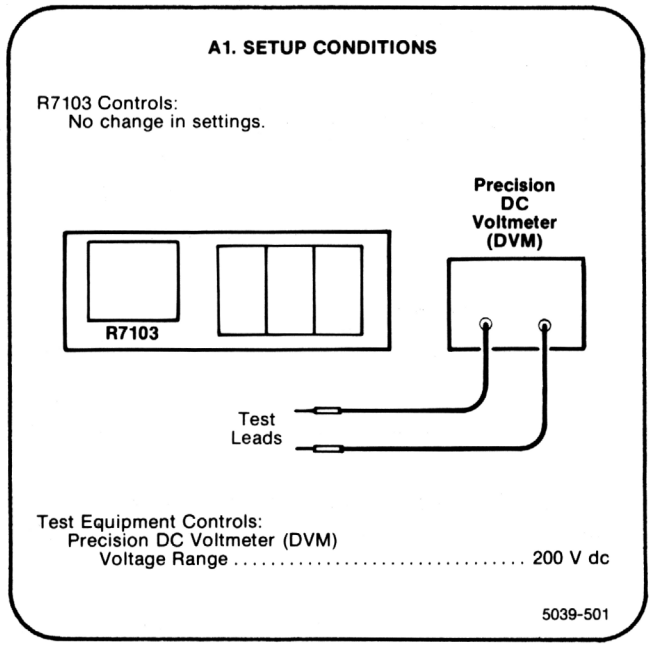


a. Connect the precision dc voltmeter between TP126 and chassis ground (accessible from the bottom of the instrument).

b. **EXAMINE**—the Meter for a reading of +108 volts within the limits of +107.5 to +108.5 volts. If the reading is within the given tolerance, proceed to step A2.

c. **ADJUST**—Pre Reg Adj adjustment, R93, for a meter reading of +108 volts within 0.5 volt.

d. **INTERACTION**—Any change in the setting of R93 may affect the adjustment of the -50 volt power supply (R15).



http://manoman.sqhill.com

## A2. ADJUST +50 VOLT POWER SUPPLY (R15)

**NOTE**

*If the preceding step was not performed, first refer to the Power Supply Preliminary Control Settings, then proceed.*

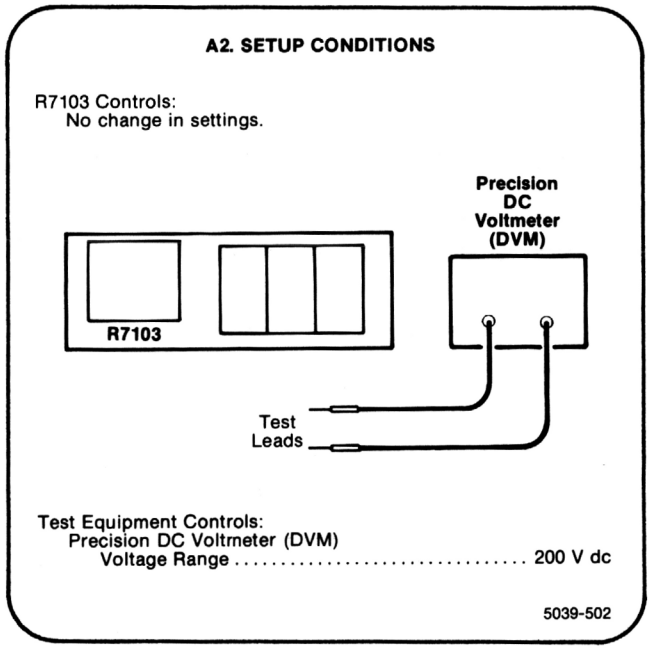


a. Connect the precision dc voltmeter between TP -50 V Sense and TP Ground Sense on the A25 Regulator Board.

b. **EXAMINE**—the meter for a reading of -50 volts, within the limits of -49.8 to -50.2 volts.

c. **ADJUST**—+50 V adjustment R15 for a meter reading of -50 volts within 0.1 volt.

d. **INTERACTION**—Any change in the setting of R15 may affect the operation of all circuits in the instrument.

## A3. EXAMINE POWER-SUPPLY VOLTAGES

**NOTE**

*If the preceding step was not performed, first refer to the Power Supply Preliminary Control Settings, then proceed.*

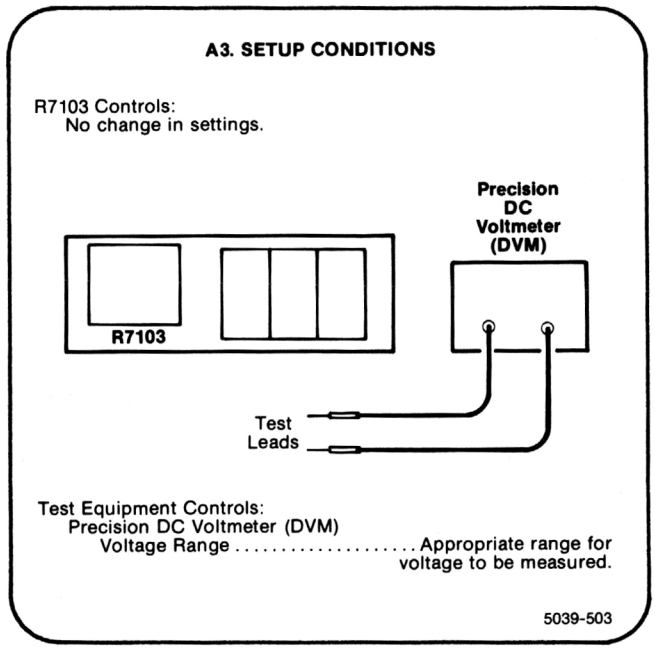


a. **EXAMINE**—Table 5-4 lists the low-voltage power supplies in this instrument. Check each supply with the precision dc voltmeter for output voltage within the given tolerance. Connect meter common lead to TP Ground Sense.

b. **INTERACTION**—If the power supplies are not within the tolerances given in Table 5-4, repeat steps A1 and A2.

**TABLE 5-4**
**Power Supply Tolerance**

| Power Supply | Output Voltage Limits |
|---|---|
| TP -50 V Sense | -49.8 to -50.2 Volts |
| TP -15 V Sense | -14.85 to -15.15 Volts |
| TP +5 V Sense | +4.9 to +5.1 Volts |
| TP +15 V Sense | +14.85 to +15.15 Volts |
| TP +50 V Sense | +49.5 to +50.5 Volts |



http://manoman.sqhill.com

c. Disconnect the precision dc voltmeter.

**NOTE**

*Regulation of the individual power supplies can be checked using the procedure given under Troubleshooting Techniques in the Maintenance section.*



http://manoman.sqhill.com

# B. Z-AXIS AND DISPLAY

**Equipment Required:** (Numbers correspond to those listed in Table 5-3, Test Equipment.)

1. Test oscilloscope
2. or 3. Amplifier
4. Time base (two required)
5. Signal standardizer (two required)
8. Precision dc voltmeter (DVM)
9. DC voltmeter (VOM)
11. Low-frequency sine-wave generator
12. High-frequency sine-wave generator
13. 10X passive probe
14. 100X probe
15. Coaxial cable (two 42-inch required)
16. 2X attenuator
17. Adapter, bnc 'T'
19. Screwdriver, low-capacitance
20. Screwdriver

BEFORE YOU BEGIN:

(1) Perform the Adjustment and Performance Check Power-Up Sequence.

(2) Refer to Section 6, Instrument Options, and the Change Information at the rear of this manual for any modifications which may affect this procedure.

(3) See the **Test Point and Adjustment Locations B** foldout page in Section 8, Diagrams and Circuit Board Illustrations.

(4) Remove the bottom cabinet cover.

## Z-AXIS AND DISPLAY PRELIMINARY CONTROL SETTINGS

POWER ..... On
VERTICAL MODE .....RIGHT
TRIGGER SOURCE ..... VERT MODE
INTENSITY .....Fully counterclockwise
FOCUS..... Midrange
READOUT INTENSITY ....OFF (in detent)
GRAT ILLUM ..... Midrange
BEAMFINDER ..... Pushbutton out

## B1. ADJUST HV SUPPLY (R1805)

**B1. SETUP CONDITIONS**

R7103 Controls:
No change in settings.

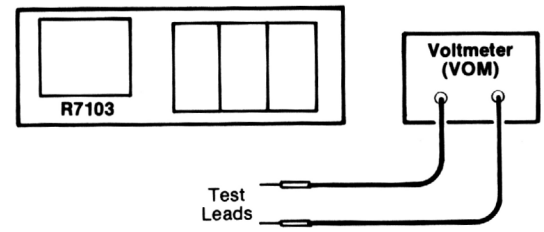


Test Equipment Controls:
Voltmeter (VOM)
Range..... Appropriate range for voltage to be measured.

5039-504

a. Set the POWER switch to OFF, and set the R7103 on its right side, with the bottom facing you.

b. Connect the dc voltmeter (VOM), set to measure at least -2500 volts (accuracy check to within 1%), between TP1846 (-2265 volt test point), and TP1756 (ground).

c. Set the POWER switch to On.

d. **EXAMINE**—the meter for a reading of -2265 volts, within the limits of -2243 to -2287 volts.



http://manoman.sqhill.com

e. **ADJUST**—HV Adjust, R1805, for a meter reading of -2265 volts.

f. Set the POWER switch to Off.

g. Set the dc voltmeter (VOM) to measure 150 volts. Connect the VOM common lead to TP1844 (-2400 V) and the positive lead to TP1846 (-2265 volts).

**WARNING**

*SHOCK HAZARD EXISTS WHILE PERFORMING PARTS H THROUGH N; VOM ELEVATED TO 2.4 kV. USE 100X PROBE.*

h. Set the POWER switch to On.

i. **EXAMINE**—the meter for a reading of 137 volts, within the limits of 132 volts to 142 volts. If the meter reads outside these limits, corrective maintenance is needed to prevent deterioration of the crt cathode.

j. Set the POWER switch to Off and disconnect the voltmeter.

k. Remove the small plastic shield from the A21 Z-Axis Board. Set the dc voltmeter (VOM) to measure 600 mV dc. Connect the VOM common lead to TP1687 and the positive lead to TP1688 (pin 6 of P1602). (Test points TP1687 and TP1688 are the ends of R1688, which is shown on Test POint and Adjustment Locations B.)

l. Set the Power switch to On.

m. **EXAMINE**—the meter for a *momentary* reading of at least 10 millivolts; if reading is less, corrective maintenance is required to prevent deterioration of the crt cathode.

n. Set the POWER switch to OFF and disconnect the dc voltmeter. Replace the plastic shield and turn on the power.

## B2. ADJUST CRT GRID BIAS (R1746)

**NOTE**

*If the preceding step was not performed, first refer to the Z-Axis And Display Preliminary Control Settings, then proceed.*

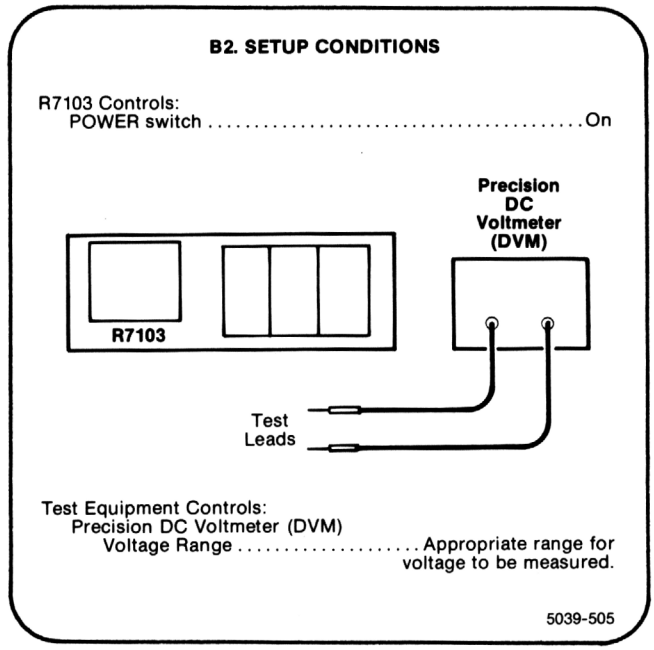


a. Connect the precision dc voltmeter (DVM) between test point TP1678, on the Z-Axis Amplifier, and chassis ground.

**NOTE**

*If the R7103 has been turned off briefly, allow it to operate for at least five minutes before performing part b.*

b. **EXAMINE**—the DVM for a reading of 8 volts within 1 volt.

c. **ADJUST**—the Z-Axis Level adjustment, R1645, for 8 volts.

d. Install an amplifier in the HORIZ compartment, and set its Position control to midrange.

e. Rotate the INTENSITY control clockwise until the DVM reads 13 volts.

**NOTE**

*The R7103 should be turned on for at least 20 minutes to allow the crt grid cutoff voltage to stabilize.*



http://manoman.sqhill.com

f. **ADJUST**—Grid Bias adjustment R1746 so that the dot displayed on the crt is just extinguished.

g. Disconnect the DVM test leads.

## B3. ADJUST Z-AXIS AMPLIFIER (R1626, R1637, R1635, C1635, C1651 and C1663).

**NOTE**

*If the preceding step was not performed, first refer to the Z-Axis And Display Preliminary Control Settings, then proceed.*

**B3. SETUP CONDITIONS**

R7103 Controls:
Time Base ..... 0.1 μs
Time/Div Mag ..... X10

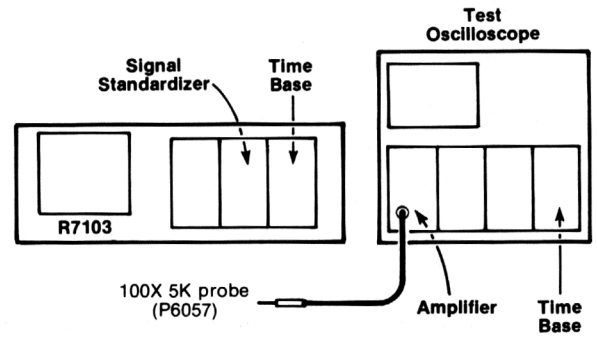


Test Equipment Controls:
Signal Standardizer
Test Selector ..... Vert or Horiz +Step
Rep Rate ..... 1 kHz

Time Base
Time/Div ..... 1 μs
Triggering ..... Auto, AC, Internal

5039-506

a. Set the INTENSITY control for a visible display.

b. Set the time-base triggering controls for a stable display.

c. Rotate the signal standardizer Amplitude and Position controls fully counterclockwise.

d. Connect the 100X 5-kilohm probe to the input of the test oscilloscope. A 50-ohm system is needed for the 100X 5-kilohm probe.

e. Connect the probe tip to TP1678. Connect the probe ground lead to chassis ground with a short grounding lead, and set the test oscilloscope trace one division above the bottom graticule line.



http://manoman.sqhill.com

. Set the test oscilloscope as follows:

Volts/div ..... 0.1 V
Time/div ..... 1 ms
Triggering
Coupling ..... Dc

g. Set the Clamp Level adjustment, R1626, fully clockwise.

h. Set the INTENSITY control fully clockwise.

i. Set the Z-Axis Gain adjustment, R1637, for a pulse amplitude (indicated on the test oscilloscope) of 70 volts above ground.

j. Set the Clamp Level adjustment, R1626, for a pulse amplitude of 63 volts above ground.

k. Rotate the INTENSITY control counterclockwise until the pulse amplitude displayed on the test oscilloscope is 33 volts above ground.

l. Set the R7103 time-base Time/Div to 2 nanoseconds/division and set its trigger source to External.

m. Set the signal standardizer Rep Rate to 100 kHz.

n. Set the test oscilloscope as follows:

Volts/Div .... 50 mV (5 V/div at probe tip)
Time/Div ..... 10 ns
Sweep Mag ..... X1

o. **EXAMINE**—the test oscilloscope display for:

Aberrations ..... less than 4%
Rise time ..... less than 6.5 ns
Fall time ..... less than 12 ns

**NOTE**

*Use test oscilloscope X1 magnifier to check aberrations and X10 magnifier to check rise time.*

p. **ADJUST**—Comp #1, #2, #3, and #4; adjustments R1635, C1635, C1651, and C1663 to minimimize the aberrations and rise time of the pulse displayed on the test oscilloscope.

**NOTE**

*Use test oscilloscope X1 magnifier to check aberrations and X10 magnifier to check rise time.*

q. Disconnect the test oscilloscope probe.

## B4. CHECK/ADJUST TRACE ALIGNMENT (R1888)

**NOTE**

*If the preceding step was not performed, first refer to the Z-Axis And Display Preliminary Control Settings, then proceed.*

**B4. SETUP CONDITIONS**

R7103 Controls:
No change in settings.

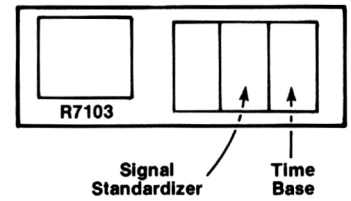


Test Equipment Controls:
Signal Standardizer
Test Selector ..... Vert or Horiz Aux In

Time Base
Time/Div ..... 1 ms
Magnifier ..... X1
Triggering ..... Auto, AC, Internal

5039-507

a. Set the INTENSITY control for a visible trace. Set the FOCUS and ASTIG controls for a well-defined trace.

b. Position the trace to the center graticule line.

c. **CHECK**—that the trace parallels the center graticule line within 0.1 division over its full length.

d. **ADJUST**—the TRACE ROTATION adjustment to align the trace with the vertical center graticule line.

e. Move the signal standardizer to the HORIZ compartment and the time base to the RIGHT VERT compartment.

f. **CHECK**—that the trace is parallel to the center graticule line within 0.1 division.

i. **ADJUST**—Y Align (Ortho) adjustment R1888 so that the trace is parallel to the center graticule line.



http://manoman.sqhill.com

## B5. CHECK/ADJUST GEOMETRY (R740, R830, R1030, R1888, R1062, R1853-R1856, R1883, R1825, R1891, R1873-R1876, R1874-R1875, R1891, R1864-R1865, R1863-R1866, R1854-R1855).

**NOTE**

*If the preceding step was not performed, first refer to the Z-Axis And Display Preliminary Control Settings, then proceed.*

**B5. SETUP CONDITIONS**

R7103 Controls:
VERTICAL MODE ..... ALT

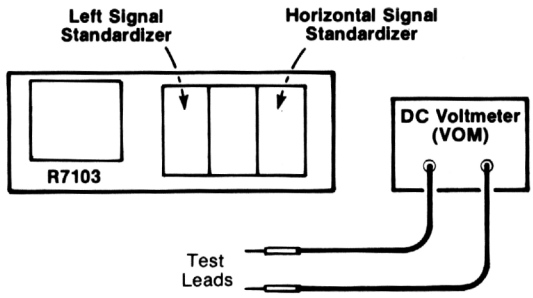


Test Equipment Controls:
Left Signal Standardizer
Test Selector ..... Vert or Horiz Gain
Rep Rate ..... 10 kHz

Horizontal Signal Standardizer
Test Selector ..... Vert or Horiz Gain
Rep Rate ..... 1 MHz

VOM ..... Appropriate range for voltage to be measured.

5039-508

a. Set the INTENSITY control for a visible display.

b. Set the FOCUS control to midrange.

c. **ADJUST**—Stigmator adjustment R1894, Focus Preset adjustment R1825 and the front-panel ASTIG control for best overall focus of the dot matrix display.

d. **CHECK**-for a dot matrix whose dots can be set on the intersections of the graticule lines within 0.1 division.

e. **INTERACTION**—Performing the adjustments in the remainder of this procedure (B5) may uncalibrate the vertical and horizontal amplifiers. Therefore, perform procedures E. Horizontal System, and F. Vertical System in this section.

f. Set both signal standardizer Test selectors to Vert or Horiz Com Mode.

g. Move Jumper P1062 to connect the two pins closest to the left side of the R7103.

**NOTE**

*Adjustment and Test Point Locations B shows the normal operating position for P1062 (located by dotted lines).*

h. **EXAMINE**—the displayed dot; it should align with the center vertical graticule line within 0.1 division.

i. **ADJUST**—Ctr (center) adjustment R1030 (Horizontal Amplifier) to position the dot to the center vertical graticule line.

j. Return Jumper P1062 to the storage pins.

k. **EXAMINE**—the displayed dot; it should align with the center horizontal graticule line within 0.l division.

l. **ADJUST**—MVA Center (main vertical amplifier) adjustment R740 to set the dot to the center horizontal graticule line.

m. Set both signal standardizer Test selectors to Vert or Horiz Gain.

n. Set the TRACE ROTATION control so that the horizontal trace is parallel to the center graticule line.

o. Set the left signal standardizer Rep Rate to 1 MHz and the right signal standardizer Rep Rate to 10 kHz.

p. **ADJUST**—Y Alignment (Ortho) adjustment R1888 so that the vertical trace is parallel to the center graticule line.

q. Set the INTENSITY control for a visible dot matrix display.

r. **ADJUST**—FOCUS and ASTIG controls, and Stigmator adjustment R1894 for best overall focus of the crosshatch pattern.

s. **ADJUST**—D1-D2 Shield adjustment R1891 for sharply focused outer dots.

**NOTE**

*As this control is adjusted, the top and bottom portions of the dot matrix become more or less focused. This is the control's primary function. Due to interaction effects, the display will also change height and show vertical pin-cushion or barrel distortions. These effects will be corrected later.*



http://manoman.sqhill.com

. **ADJUST**—Vertical Linearity adjustment R1853-R1856 for best overall vertical linearity (expand dot matrix display until best linearity is achieved).

**NOTE**

*There may be some imbalance (i.e., compression at top and expansion at bottom) which should be averaged out so that the errors are of the same magnitude. As the Vertical Linearity adjustment is adjusted, the display will either shrink and become barreled vertically, or expand and become pin-cushioned vertically. These effects will be corrected later.*

u. **ADJUST**—If any vertical linearity imbalance is observed in previous steps, adjust the Vertical Differential Linearity adjustment R1854-R1855 to correct this condition. (i.e., place each horizontal line coincident with a graticule line.) As this control is adjusted, the vertical columns of dots will become keystoned (nonparallel). This effect will be corrected later.

v. **ADJUST**—Geometry adjustment R1863-R1866 for straight vertical traces (aim for straightness without keystone).

**NOTE**

*As R1863-R1866 is adjusted, the display will also expand or contract horizontally. This effect will be corrected later.*

w. **ADJUST**—If any vertical keystone is present on the display, it should be corrected by adjusting the Differential Geometry adjustment R1864-R1865.

x. Set the signal standardizer Rep Rate controls as follows:

Left ..... 10 kHz
Right ..... 1 MHz

y. **ADJUST**—Horizontal Bowing adjustment R1883 to obtain straight horizontal lines at the top and bottom of the the crt screen.

**NOTE**

*As this control is adjusted, the display will shrink or expand horizontally. This effect will be compensated for later. The line-straightening effect of this control is very slight.*

z. Set the signal standardizer installed in the HORIZ compartment to Vert or Horiz Aux In.

aa. Rotate the HORIZ signal standardizer Position control to align the column-of-dots trace with the graticule line two divisions from the left side of the crt screen.

bb. With a precision dc voltmeter, measure the differential voltage on the crt horizontal deflection plates. Record this voltage.

cc. Rotate the HORIZ signal standardizer Position control to align the trace with the graticule line two divisions from the right side of the crt screen.

dd. With the precision dc voltmeter, measure the differential voltage on the crt horizontal deflection plates. Record this voltage.

ee. **EXAMINE**—the sum of the absolute voltages measured in parts bb and dd; it should be 9.4 volts within 0.94 volt (1.88 volts/division of deflection, within 10%).

ff. **ADJUST**—Horizontal Sensitivity adjustment R1873-R1876 to obtain a crt horizontal sensitivity that is 1.88 volts/division, within 10% (9.4 volts within 0.94 volt for five divisions of deflection).

**NOTE**

*If this adjustment is moved an appreciable amount, it may be necessary to readjust the Geometry adjustment R1863-R1866 to compensate for the slight pin-cushion or barrel distortion of the vertical lines. If the crt horizontal sensitivity of 1.88 volts/division within 10% cannot be achieved with the Horizontal Sensitivity adjustment R1873-R1876, it may be corrected by adjusting the Horizontal Bowing adjustment R1883 slightly at the expense of minor horizontal line bowing.*

gg. Set the signal standardizer installed in the HORIZ compartment to Vert or Horiz Gain.

hh. **ADJUST**—if horizontal nonlinearity or nonuniform bowing of vertical lines is observed on the display, adjust the Horizontal Differential Sensitivity adjustment R1874-R1875 to correct the nonlinearity.

ii. **ADJUST**—FOCUS control, ASTIG control and Stigmator adjustment R1894 for best overall focus of crosshatch pattern.

jj. **EXAMINE**—the displayed dot matrix pattern; it should align with the vertical and horizontal graticule lines within 0.1 division everywhere on the graticule.



http://manoman.sqhill.com

kk. **ADJUST**—Vert Gain adjustment R830 and LF Gain adjustment R1062 so that the vertical and horizontal traces of the crosshatch display align with the vertical and horizontal graticule lines within 0.1 division.

## B6. ADJUST AUTO FOCUS (R1622, C1620)

**NOTE**

*If the preceding step was not performed, first refer to the Z-Axis And Display Preliminary Control Settings, then proceed.*

**B6. SETUP CONDITIONS**

R7103 Controls:
VERTICAL MODE ..... RIGHT

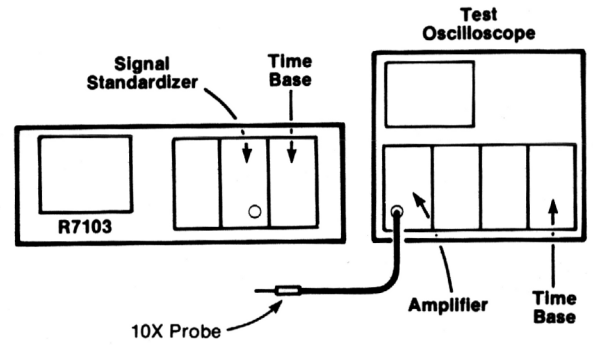


Test Equipment Controls:
Test Oscilloscope
Volts/Div ..... 0.2 V
Time/Div ..... 20 ns
Triggering ..... Negative slope

Time Base
Time/Div ..... 2 ns
Magnifier ..... X1
Triggering ..... Auto, AC, Internal
Trace Sep ..... OFF

Signal Standardizer
Test ..... Vert or Horiz + Step Resp
Rep Rate ..... 100 Hz

5039-509

a. Set the time-base triggering level so that the Triggered light comes on.

b. Set the INTENSITY control for a low-intensity display.

c. Set the display to the center of the crt with the signal standardizer Position control.

d. Set the FOCUS control and ASTIG adjustment for a well-defined display.

e. Connect the 10X probe from the test oscilloscope to TP1628 on the A21 Z-Axis Board.

f. Use the signal standardizer Position control to move the displayed waveform off the crt screen.



http://manoman.sqhill.com

g. Set the INTENSITY control fully clockwise.

h. **ADJUST**—the Focus Gain adjustment R1622 for maximum pulse amplitude displayed on the test oscilloscope.

i. **EXAMINE**—the pulse displayed on the test oscilloscope; its amplitude should be at least six volts, and its leading-edge fall time should be 20 nanoseconds or less with less than 25% aberrations.

j. Set the READOUT INTENSITY control for a visible readout display.

k. Set the FOCUS control for optimum focus of the readout display.

l. Rotate the signal standardizer Position control to move the display to the crt screen center.

m. **EXAMINE**—rotate the FOCUS control and check that the pulse and readout displays focus at the same point on the FOCUS control.

n. **ADJUST**—the Focus Gain adjustment, R1622, for optimum focus of the displayed pulse.

## B7. CHECK EXTERNAL Z-AXIS OPERATION

### NOTE

*If the preceding step was not performed, first refer to the Z-Axis And Display Preliminary Control Settings, then proceed.*

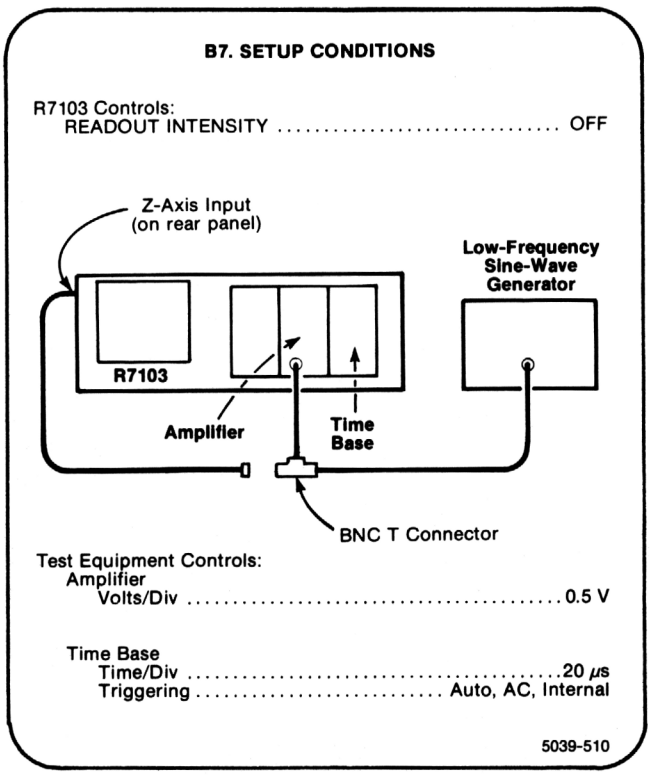


a. Set the INTENSITY control for a dim display.

b. Set the low-frequency sine-wave generator for a four-division display at 50 kilohertz (the reference frequency). The four-division display indicates one volt above and below ground.

c. Momentarily connect the cable from the Z-AXIS INPUT connector on the rear panel to the bnc T connector at the input to the amplifier.

d. **CHECK**—that the positive portion of the displayed waveform is blanked while performing part c.



http://manoman.sqhill.com

# C. CALIBRATOR AND OUTPUT SIGNALS

**Equipment Required:** (Numbers correspond to those listed in Table 5-3, Test Equipment.)

1. Test oscilloscope
4. Time base
8. Precision dc voltmeter (DVM)
10. Time-mark generator
15. Coaxial cable (one 18-inch, two 42-inch required)
17. Adapter, bnc T
20. Screwdriver

BEFORE YOU BEGIN:

(1) Perform the Adjustment and Performance Check Power-Up Sequence.

(2) Refer to Section 6, Instrument Options, and the Change Information at the rear of this manual for any modifications which may affect this procedure.

(3) See the **Test Point and Adjustment Locations C** foldout page in Section 8, Diagrams and Circuit Board Illustrations.

## CALIBRATOR AND OUTPUT SIGNALS PRELIMINARY CONTROL SETTINGS

POWER ..... On
VERTICAL MODE .....RIGHT
TRIGGER SOURCE ..... VERT MODE
INTENSITY.....Fully counterclockwise
READOUT INTENSITY ....OFF (in detent)
GRAT ILLUM ..... Midrange
BEAMFINDER ..... Pushbutton out
CALIBRATOR .....4 V pushbutton in

## C1. CHECK/ADJUST CALIBRATOR OUTPUT VOLTAGE (R385)

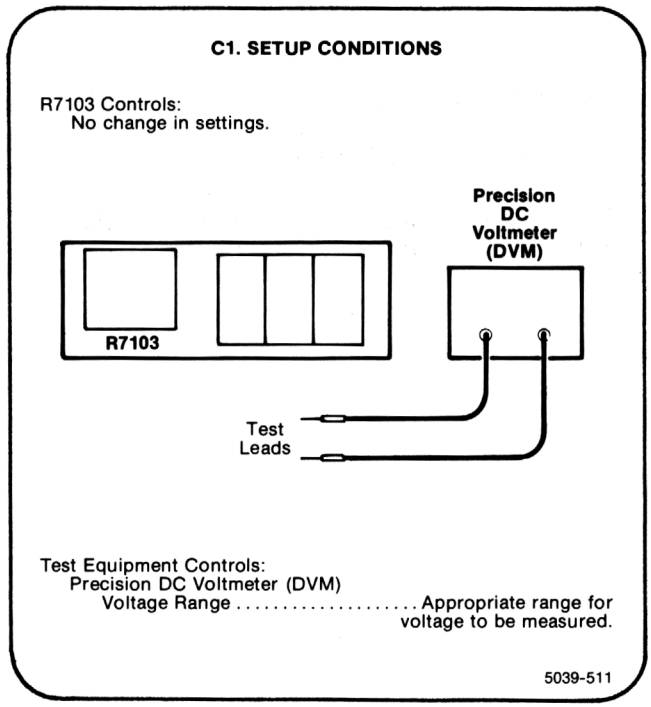


a. Press in the 4 V and 0.4 V CALIBRATOR pushbuttons.

b. Connect the precision dc voltmeter to the CALIBRATOR output connector.

c. **CHECK**—that the meter reading is 0.4008 volt, within the limits of 0.4004 to 0.4012 volt.

d. **ADJUST**—the 0.4 V ADJ adjustment, R385, for a meter reading of exactly 0.4008 volt. (Access to R385 is through the top of the instrument.)



http://manoman.sqhill.com

## C2. CHECK/ADJUST CALIBRATOR 1 kHz REPETITION RATE (R375)

**NOTE**

*If the preceding step was not performed, first refer to the Calibrator And Output Signals Preliminary Control Settings, then proceed.*

**C2. SETUP CONDITIONS**

R7103 Controls:
CALIBRATOR ..... 0.4 V pushbutton in

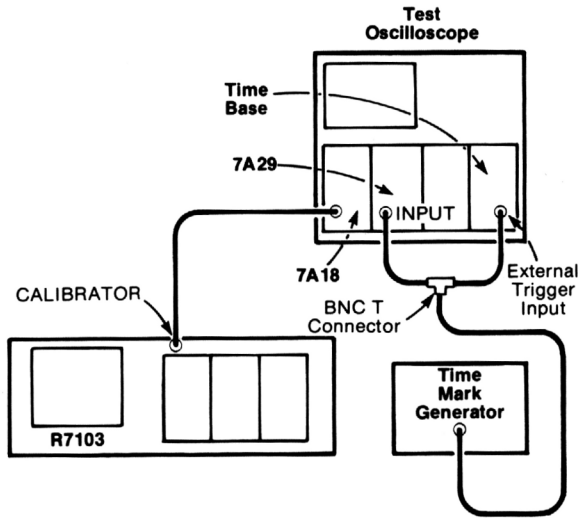


Test Equipment Controls:
Time-Mark Generator ..... 1 ms markers

Test Oscilloscope
Time/Div ..... 1 ms
Triggering ..... Auto, AC, External
Input Coupling ..... DC
Vertical Mode ..... Alt
Volts/Div
Left ..... 0.2
Right ..... 0.5

5039-512

**NOTE**

*A frequency counter with an accuracy of at least 0.1% may be used to adjust the calibrator repetition rate.*

a. Set the test oscilloscope triggering level for a stable time-mark display.

b. Observe that the 1 kHz Calibrator signal drifts across the crt of the test oscilloscope.

c. **CHECK**—that the time required for one cycle of the square-wave Calibrator signal to drift from one side of the display to the other is 10 seconds or more.

d. **ADJUST**—1 kHz adjustment R375 for minimum drift. (R375 can be reached through the top of the instrument with the top removed.)



http://manoman.sqhill.com

## C3. CHECK CALIBRATOR RISE TIME, FALL TIME, AND DUTY CYCLE

**NOTE**

*If the preceding step was not performed, first refer to the Calibrator And Output Signals Preliminary Control Settings, then proceed.*

**C3. SETUP CONDITIONS**

R7103 Controls:
No change in settings.

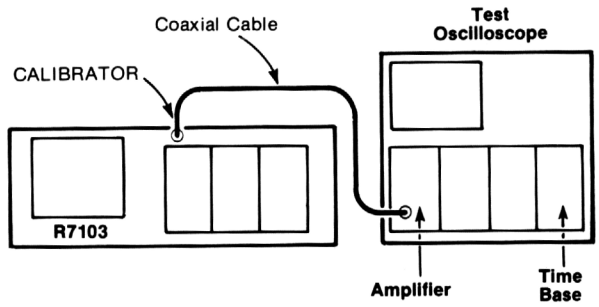


Test Equipment Controls:
Test Oscilloscope
Time/Div ..... 0.1 μs
Triggering ..... Auto, AC, Internal

5039-513

a. Connect the CALIBRATOR output to the inverting vertical input of the test oscilloscope.

b. Set the test oscilloscope vertical deflection to display four divisions of calibrator signal.

c. Set the test oscilloscope for a stable display, triggered on the positive transition of the calibrator signal.

d. **CHECK**—the displayed waveform for not more than five horizontal divisions between the 10% and 90% points of the waveform (rise time, 0.5 microsecond or less).

e. Set the test oscilloscope for a stable display triggered on the negative transition of the waveform.

f. **CHECK**—the displayed waveform for not more than 5 divisions between the 90% and 10% points (fall time, 0.5 microsecond or less).

g. Set the test oscilloscope as follows:

Input Coupling ..... AC
Time/Div ..... 0.1 ms
Triggering
Slope ..... +
Level .....So that display starts at 50% point (middle) of positive transition.
Mode.....Auto
Coupling ..... AC
Source .....Int

h. Set the test oscilloscope sweep magnifier to X10. Then move the display horizontally to align the negative transition of the waveform with the center vertical graticule line.

i. Set the test oscilloscope vertical to invert the display. (NOTE: The display is triggered on the opposite slope, even though the display appears the same.)

j. **CHECK**—that the 50% point on the falling edge of the waveform now displayed is within 0.2 horizontal divisions of the center line. (Indicates a duty cycle of 50% within 0.2%.)



http://manoman.sqhill.com

## C4. CHECK SAWTOOTH OUTPUT SIGNAL

**NOTE**

*If the preceding step was not performed, first refer to the Calibrator And Output Signals Preliminary Control Setting, then proceed.*

**C4. SETUP CONDITIONS**

R7103 Controls:
No change in settings.

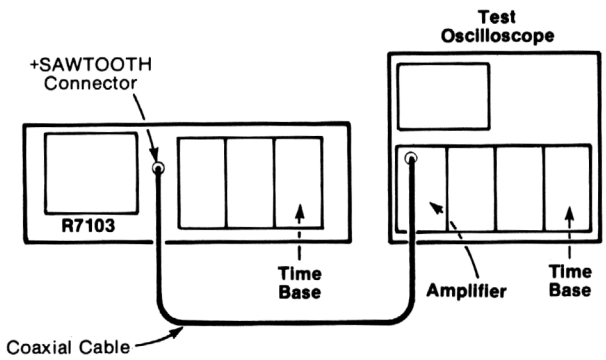


Test Equipment Controls:
Test Oscilloscope
Time/Div ..... 2 ms
Volts/Div ..... 2 V
Display Mode ..... Ch 1

Time Base
Time/Div ..... 0.2 ms
Triggering ..... Auto

5039-514

a. Connect the +SAWTOOTH output connector to the test oscilloscope channel 1 vertical input (1 megohm input).

b. **CHECK**—that 1) the slope of the waveform displayed on the test oscilloscope display is 2 volts/division within 10% (a 10-volt sawtooth signal is required to produce a 10-division sweep on the R7103 crt), and that 2) the sawtooth baseline is within one volt of ground.

## C5. CHECK GATE OUTPUT SIGNAL

**NOTE**

*If the preceding step was not performed, first refer to the Calibrator And Output Signals Preliminary Control Settings, then proceed.*

**C5. SETUP CONDITIONS**

R7103 Controls:
No change in settings.

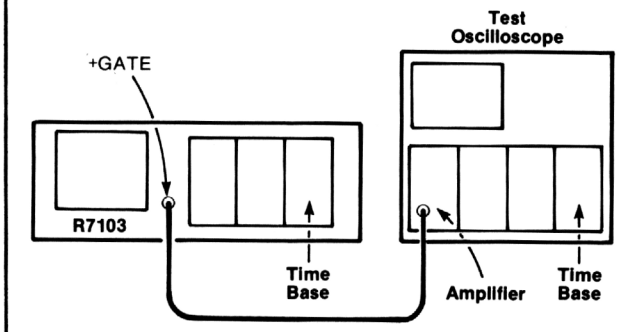


Test Equipment Controls:
Test Oscilloscope
Volts/Div ..... 2 V
Time/Div ..... 2 ms
Magnifier ..... X1

Time-Base
Time/Div ..... 0.2 ms
Triggering ..... Auto, AC, Internal

5039-515

a. **CHECK**—the test oscilloscope display for a gate waveform five divisions in amplitude, within 10%, and a baseline at zero volts, within one volt.



http://manoman.sqhill.com

## C6. CHECK GRATICULE ILLUMINATION OPERATION

**NOTE**

*If the preceding step was not performed, first refer to the Calibrator And Output Signals Preliminary Control Settings, then proceed.*

**C6. SETUP CONDITIONS**

R7103 Controls:
GRAT ILLUM +GATE or EXT switch ..... +GATE

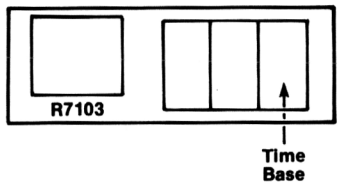


Test Equipment Controls:
Time Base
Time/Div ..... 0.2 s
Triggering ..... Auto, AC, Internal

5039-516

a. **CHECK**—that rotating the GRAT ILLUM control through its range varies the illumination of the graticule.

b. Set the GRAT ILLUM control fully clockwise to the PULSED detent position.

c. Set the INTENSITY control for a visible display.

d. **CHECK**—that graticule illumination occurs only after the time base has completed a sweep (adjust GRAT ILLUM PRESET, if necessary).

e. Set the GRAT ILLUM +GATE or EXT switch to EXT.

f. **CHECK**—press the GRAT ILLUM MAN pushbutton and check for one momentary illumination of the graticule.

g. Set the GRAT ILLUM control to midrange (out of the PULSED detent position).



http://manoman.sqhill.com

# D. TRIGGER SYSTEM

**Equipment Required:** (Numbers correspond to those listed in Table 5-3, Test Equipment.)

1. Test oscilloscope
3. Amplifier
4. Time base (two required)
5. Signal standardizer
6. Plug-in extender (rigid calibration fixture)
15. Coaxial cable (one 18-inch, two 42-inch required)
20. Screwdriver

BEFORE YOU BEGIN:

(1) Perform the Adjustment and Performance Check Power-Up Sequence.

(2) Refer to Section 6, Instrument Options, and the Change Information at the rear of this manual for any modifications which may affect this procedure.

(3) See the **Test Point and Adjustment Locations D** foldout page in Section 8, Diagrams and Circuit Board Illustrations.

## TRIGGER SYSTEM PRELIMINARY CONTROL SETTINGS

POWER ..... On
VERTICAL MODE .....RIGHT
TRIGGER SOURCE ..... VERT MODE
INTENSITY.....Fully counterclockwise
FOCUS..... Midrange
READOUT INTENSITY ....OFF (in detent)
GRAT ILLUM ..... Midrange
BEAMFINDER ..... Pushbutton out

## D1. ADJUST TRIGGER SELECTOR CENTERING AND GAIN (R256, R274, R279)

**D1. SETUP CONDITIONS**

R7103 Controls:
No change in settings.

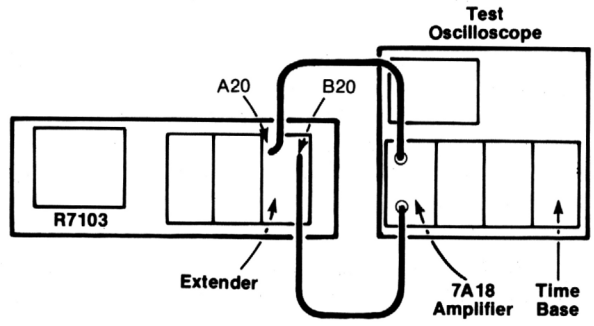


Test Equipment Controls:
Test Oscilloscope
Volts/Div
Channel 1.....50 mV
Input Coupling..... Gnd or Off
Channel 2..... 50 mV/div
Input Coupling..... Gnd or Off
Time/Div ..... 1 ms

5039-517

a. Within the plug-in extender, disconnect the top connector on the left and right sides (labeled A20 and B20). Connect each female connector to one of the test oscilloscope vertical input channels with the 42-inch coaxial cables and 50-ohm terminations (omit the 50-ohm terminations if the test oscilloscope has 50-ohm input impedance). Connect A20 to Ch 1 of the test oscilloscope and B20 to Ch 2.

b. Set the test oscilloscope for differential operation between the two channels (Add display mode with one channel inverted).



http://manoman.sqhill.com

c. Establish a ground reference level for the test oscilloscope by setting the trace to the center horizontal line of the graticule.

   Do not change the test oscilloscope position controls after setting this ground reference.

d. Set both channels of the test oscilloscope for dc input coupling.

e. **EXAMINE**—the test oscilloscope display a for dc level within one division (50 millivolts) of the ground reference level in the LEFT, RIGHT, and ADD positions of the VERTICAL MODE selector.

f. **ADJUST**—Trig DC Center adjustment R256 for a dc level within one division (50 millivolts) of the ground reference level in the LEFT, RIGHT, and ADD positions of the VERTICAL MODE selector.

g. Install a signal standardizer in the LEFT VERT compartment.

h. Set the VERTICAL MODE to LEFT.

i. Set the signal standardizer Test selector to Trigger +Step Resp, and the Rep Rate to 1 kHz. Use the signal standardizer Position and Amplitude controls to center a six-division display on the test oscilloscope. Set the test oscilloscope sweep rate to 0.5 millisecond/division.

j. **EXAMINE**—the test oscilloscope display for less than +3% and -3% aberrations (+0.18 div. and -0.18 div.).

k. Set the signal standardizer Test selector to Trigger Gain and the Rep Rate to 1 MHz. Use the signal standardizer Position control to move the bright trace display on the test oscilloscope to the center graticule line.

l. **EXAMINE**—the test oscilloscope display for nine traces with six divisions of vertical deflection between the center seven traces, within 0.6 division (300 millivolts, within 20 millivolts).

m. **ADJUST**—the Gain adjustment, R274, for a test oscilloscope display of six divisions of deflection between the center seven traces, within 0.6 division (300 millivolts, within 30 millivolts).

n. Remove the signal standardizer from the LEFT VERT compartment.

o. Set the test oscilloscope to alternate between channel 1 and channel 2. Re-establish a ground reference for both channels of the test oscilloscope. Then set both channels to dc coupling.

p. **EXAMINE**—the test oscilloscope display for a dc level within one division, (50 millivolts) of the established ground reference.

q. **ADJUST**—the DC Common Mode adjustment, R279, for a dc level within one division of ground.



http://manoman.sqhill.com

## D2. CHECK/ADJUST VERTICAL SIGNAL OUT DC CENTERING (R485, R480, R490)

**NOTE**

*If the preceding step was not performed, first refer to the Trigger System Preliminary Control settings, then proceed.*

**D2. SETUP CONDITIONS**

R7103 Controls:
No change in settings.

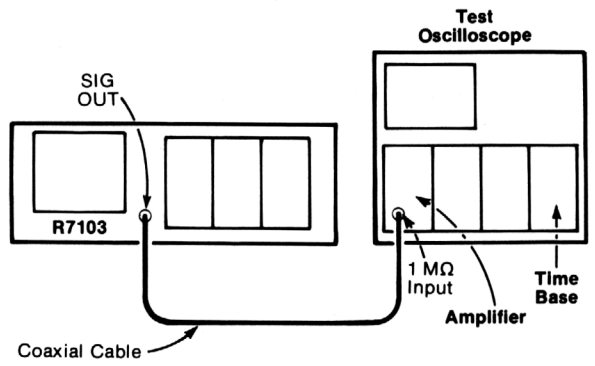


Test Equipment Controls:
Test Oscilloscope
Input Coupling ..... Gnd or Off
Volts/Div ..... 0.5 V
Display Mode ..... Ch 1
Time/Div ..... 0.2 ms

5039-518

a. Establish a ground reference for the test oscilloscope by setting the trace to the graticule horizontal center line. Do not move the test oscilloscope position control after setting this ground reference.

b. Set the test oscilloscope to dc coupling.

c. **EXAMINE**—the test oscilloscope display for a dc level within 1 division of the ground reference established in part a.

d. **ADJUST**—the Signal Out DC Center adjustment, R485, for a dc level within one division of the ground reference level.

e. Install the signal standardizer in the LEFT VERT compartment.

f. Set the Test selector to Trigger +Step Resp and the Rep Rate to 1 kHz.

g. Rotate the signal standardizer Position and Amplitude controls to display a six-division triggered signal on the test oscilloscope.

h. **EXAMINE**—the test oscilloscope square-wave display for optimum flat top within 0.1 division.

i. **ADJUST**—the Signal Out Thermal 1 adjustment, R480, to optimize the test oscilloscope square-wave display.

j. Set the signal standardizer Rep Rate to 10 kHz.

k. Set the test oscilloscope Time/Div to 20 $\mu$s.

l. **EXAMINE**—the test oscilloscope square-wave display for a flat top within 0.2 division.

m. **ADJUST**—the Signal Out Thermal 2 adjustment, R490, to optimize the test oscilloscope square-wave display.



http://manoman.sqhill.com

## D3. CHECK TRIGGER SELECTOR OPERATION

**NOTE**

*If the preceding step was not performed, first refer to the Trigger System Preliminary Control Settings, then proceed.*

**D3. SETUP CONDITIONS**

R7103 Controls:
VERTICAL MODE ..... LEFT
TRIGGER SOURCE ..... VERT MODE

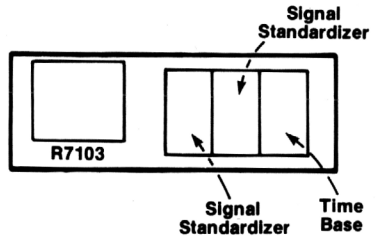


Test Equipment Controls:
Signal Standardizer (Right)
Test Selector ..... Vert or Horiz +Step Resp
Rep Rate ..... 10 kHz

Signal Standardizer (Left)
Test Selector ..... Vert or Horiz +Step Resp
Rep Rate ..... 1 kHz

Time Base
Time/Div ..... 0.2 ms
Magnifier ..... X1
Triggering ..... Auto, AC, Internal
Mode ..... Independent

5039-519

a. Connect the CALIBRATOR 4 V output to the amplifier. Set the INTENSITY control for a visible display. Set the amplifier for a two-division display in the upper half of the graticule area. Use the time-base trigger level to trigger the display.

b. Set the VERTICAL MODE to RIGHT.

c. Set the signal standardizer Amplitude and Position controls for a two-division display in the lower half of the graticule area.

d. Set the VERTICAL MODE to ALT.

e. **CHECK**—the crt display for 1 kHz and 10 kHz triggered waveforms (adjust the time-base trigger level controls as necessary).

f. Set the VERTICAL MODE to ADD.

g. **CHECK**—the crt display for a triggered waveform.

h. Set the VERTICAL MODE to CHOP.

i. **CHECK**—the crt display for a stable display of the 1 kHz waveform only.

j. Set the TRIGGER SOURCE to LEFT VERT.

k. **CHECK**—sequentially select all positions of the VERTICAL MODE selector (except RIGHT) and check for a stable display of the 1 kHz waveform only.

l. Set the TRIGGER SOURCE to RIGHT VERT.

m. **CHECK**—sequentially select all positions of the VERTICAL MODE selector (except LEFT) and check for a stable display of the 10 kHz waveform only.



http://manoman.sqhill.com

# E. HORIZONTAL SYSTEM

**Equipment Required:** (Numbers correspond to those listed in Table 5-3, Test Equipment.)

2. Amplifier (two required, one with variable delay)
4. Time base
5. Signal standardizer
8. Precision dc voltmeter (DVM)
10. Time-mark generator
11. Low-frequency sine-wave generator
15. Coaxial cable (one 18-inch, two 42-inch required)
17. Adaptor, bnc T
19. Screwdriver, low capacitance
20. Screwdriver

BEFORE YOU BEGIN:

(1) Perform the Adjustment and Performance Check Power-Up Sequence

(2) Refer to Section 6, Instrument Options, and the Change Information at the rear of this manual for any modifications which may affect this procedure.

(3) See the **Test Point and Adjustment Locations E** foldout page in Section 8, Diagrams and Circuit Board Illustrations.

## HORIZONTAL SYSTEM PRELIMINARY CONTROL SETTINGS

POWER ..... On
VERTICAL MODE .....RIGHT
TRIGGER SOURCE ..... VERT MODE
INTENSITY.....Fully counterclockwise
FOCUS..... Midrange
READOUT INTENSITY ....OFF (in detent)
GRAT ILLUM .....As desired
BEAMFINDER ..... Pushbutton out

## E1. CHECK/ADJUST HORIZONTAL AMPLIFIER GAIN (R1030, R995, R965, R1062)

**E1. SETUP CONDITIONS**

R7103 Controls:
No change in settings.

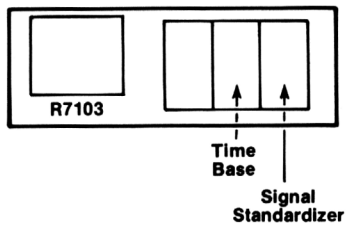


Test Equipment Controls:
Signal Standardizer
Test Selector ..... Vert or Horiz Com Mode
Rep Rate ..... 1 MHz

Time Base
Time/Div ..... 0.1 ms
Triggering ..... Auto, AC, Internal

5039-520

a. Set the INTENSITY control for a visible trace.

b. Move jumper P1062 to connect the two pins closest to the outside of the R7103. Note: Test Point and Adjustment Locations E (Section 8, Diagrams and Circuit Board Illustrations) shows the desired position of P1062 located by dotted lines.

c. **EXAMINE**—the display; the vertical trace should be within 0.5 division of the center vertical graticule line.



http://manoman.sqhill.com

d. **ADJUST**—the Ctr adjustment, R1030, to align the displayed trace with the center vertical graticule line.

e. Return jumper P1062 to the storage pins.

f. **EXAMINE**—the display; the vertical trace should be within 0.5 division of the center graticule line.

g. **ADJUST**—the A Ctr adjustment, R995, to align the trace with the center graticule line.

h. Set the signal standardizer as follows:

Test ..... Vert or Horiz Gain
Rep Rate ..... 100 kHz
Position ..... Align the brighter vertical trace with the vertical center graticule line.

i. **CHECK**—for eight divisions of deflection between the center nine traces within 0.08 division. And, CHECK that the other vertical traces align with their respective graticule lines within 0.05 divisions. (Specified at the center graticule line.)

j. **ADJUST**—LF Gain Adjustment R1062 for exactly eight divisions of total deflection for the center nine traces. (Measure between the second and tenth graticule lines.)

k. **INTERACTION**—If R1062 was adjusted in step E1, step E2 should be performed.

## E2. CHECK/ADJUST HIGH-FREQUENCY TIMING (R1005, R1062, R975, R988, R985, R982, R980, R1082, R1073, C1036, C1040, C1060, R1099).

**NOTE**

*If the preceding step was not performed, first refer to the Horizontal System Preliminary Control Settings, then proceed.*

**E2. SETUP CONDITIONS**

R7103 Controls:
No change in settings.

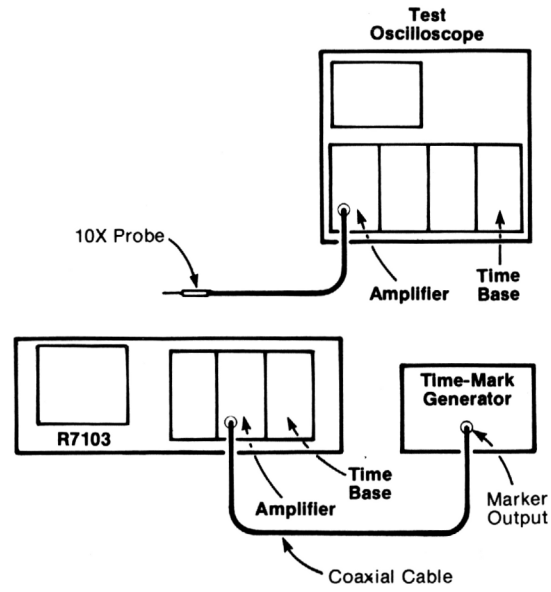


Test Equipment Controls:

Test Oscilloscope
- Volts/Div ..... 0.5 V
- Time/Div ..... 5 μs
- Triggering ..... Auto, AC, Internal
- Input Coupling ..... Dc

Time Base
- Time/Div ..... 1 ms
- Triggering ..... Auto, AC, Internal
- Mode ..... Independent

Amplifier
- Volts/Div ..... 0.5 V
- Input Coupling ..... DC

Time-Mark Generator ..... 1 ms markers

5039-521

a. Connect 1-millisecond markers from the time-mark generator to the amplifier input. Set the amplifier deflection factor for about two divisions of display. Set the INTENSITY control for a visible display, if necessary.



http://manoman.sqhill.com

b. Set the time-base triggering controls for a stable display.

c. Position the first marker to the extreme left graticule line.

d. Adjust the time-base sweep calibration control to set a marker at each major graticule division between the second and tenth graticule lines (center 8 divisions).

e. **CHECK**—refer to the time-base instruction manual for performance check or calibration procedures for checking high-frequency timing and linearity. If the given limits are met, omit the remainder of this step.

f. Remove the amplifier and time base from the R7103.

g. Install a time base in the RIGHT VERT compartment and a signal standardizer in the HORIZ compartment.

h. Set the signal standardizer Test selector to Vert or Horiz +Step Resp and the Rep Rate to 1 MHz.

i. Set the time base as follows:

Time/div..... 1 ms
Triggering
Mode.....Auto
Coupling ..... AC
Source ..... Ext

j. Set the signal standardizer Amplitude and Position controls for a 10-division display centered on the crt.

k. Connect a 10X probe from the test oscilloscope to the horizontal crt termination, R1099. Connect the probe ground lead to the R7103 chassis.

**NOTE**

*Test Point and Adjustment Locations E, in Section 8 (Diagrams and Circuit Board Illustrations) shows where to connect the 10X probe.*

l. Set the test oscilloscope variable gain control for two divisions of displayed waveform and position the bottom of the displayed waveform to align with the center graticule line on the test oscilloscope crt.

m. Rotate the signal standardizer Position control counterclockwise to align the right side of the R7103 display with the left-most graticule line on the left side of the R7103 crt.

n. **ADJUST**—Clamp adjustment R1005 so that the bottom of the displayed test oscilloscope waveform aligns with the first graticule line below the center graticule line on the test oscilloscope crt.

o. Disconnect the 10X probe.

p. Set the time base as follows:

Time/div..... 0.2 ms
Mag .....X10
Triggering
Slope ..... +
Mode.....Auto
Coupling ..... AC
Source ..... Ext

q. Connect a coaxial cable from the signal standardizer Pre Trigger Out connector to the time-base External Trigger In connector, then adjust the time base Triggering Level control to trigger the sweep.

r. Set the signal standardizer Position and Amplitude controls for an eight-division display at a Rep Rate of 10 kHz. (Align the waveform on the second and tenth graticule lines.)

s. Set the time-base Time/Div to 1 microsecond and the signal standardizer Rep Rate to 1 MHz.

t. ADJUST—HF Gain adjustment, R1082, so that the displayed pulse is eight divisions wide at a point 10 nanoseconds from the leading edge.

u. **ADJUST**—SP Damp adjustment, R1073, and Delay adjustment C1036 to optimize step response.

v. Set the time base Time/Div to 20 nanoseconds.

w. Use the time base Position and Triggering Level controls to set the leading edge of the pulse near the second graticule line from the bottom of the crt. Set the Triggering Slope to minus.

x. **ADJUST**—Comp #9 and #10 adjustments, C1040 and C1060, to optimize the first two nanoseconds of the front corner on the displayed pulse.

y. **ADJUST**—HF Gain adjustment, R1082, to align the area of the pulse three nanoseconds from the front corner with the retrace overshoot.

z. **ADJUST**—Horiz CRT termination adjustment, R1099, to align the area of the pulse eight nanoseconds from the front corner of the pulse with the retrace overshoot.



http://manoman.sqhill.com

aa. **INTERACTION**—adjustments in parts x and y interact. Repeat them as necessary to eliminate interaction.

bb. Set the time-base Time/Div to 0.5 microsecond/division and the triggering to negative slope. Use the time-base Position control to align the front corner of the pulse with the second graticule line from the bottom of the crt.

cc. **ADJUST**—SP Damp adjustment, R1073, and Delay adjustment, C1036, to optimize the the front corner of the displayed pulse.

dd. Set the time base Time/Div to 2 microseconds.

ee. Set the signal standardizer Position and Amplitude controls so that the displayed pulse is exactly eight divisions in amplitude (align the waveform on the second and tenth graticule lines; use the center horizontal graticule line to set eight divisions), measured 200 nanoseconds from the front-corner of the pulse (the front corner of the pulse is the right side of displayed waveform lower corner).

**NOTE**

*Be careful not to change the signal standardizer Amplitude control throughout the remaining parts of this step.*

ff. Set the time-base Time/Div to 2 milliseconds, the magnifier to X1, and the signal standardizer Rep Rate to 100 Hz.

**NOTE**

*Adjustments in the remainder of this step are measured and adjusted at the graticule's vertical center by vertically positioning the trace with the time-base Position control as needed.*

gg. **ADJUST**—A LF ADJ adjustment, R975, for exactly eight divisions at the trailing edges of the displayed pulse (trailing edge of pulse is upper portion of pulse on left and right sides of waveform).

hh. Set the time-base Time/Div to 1 millisecond.

ii. **ADJUST**—Comp #5 adjustment, R988, for eight divisions of pulse amplitude 0.2 millisecond from the front corner of the pulse.

jj. Set the time-base Time/Div to 0.2 millisecond. Set the signal standardizer Rep Rate to 1 kHz.

kk. **ADJUST**—Comp #6 adjustment, R985, for eight divisions of pulse amplitude 20 microseconds from the front corner of the pulse.

ll. Set the time-base Time/Div to 20 microseconds, and the signal standardizer Rep Rate to 10 kHz.

mm. **ADJUST**—Comp #7 adjustment, R982, for an eight-division pulse two microseconds from the front corner of the pulse.

nn. Set the time-base Time/Div to 2 microseconds, and the signal standardizer Rep rate to 100 kHz.

oo. **ADJUST**—Comp #8 adjustment, R980, so that the pulse is eight divisions in amplitude 0.2 microsecond from its front corner.

pp. Set the time base to Internal triggering and the signal standardizer Test selector to Vert or Horiz Gain.

qq. **ADJUST**—Align the bright center trace with the center graticule line and set LF Gain adjustment R1062 for eight divisions of deflection between the center nine traces.

rr. Set the time-base Magnifier to X10 and the Triggering to External. Set the signal standardizer Test selector to Vert or Horiz +Step and the Rep Rate to 1 MHz.

ss. **ADJUST**—HF Gain R1082 for a flat top.



http://manoman.sqhill.com

## E3. CHECK HORIZONTAL BANDWIDTH

**NOTE**

*If the preceding step was not performed, refer to the Horizontal System Peliminary Control Settings, then proceed.*

**E3. SETUP CONDITIONS**

R7103 Controls:
No change in settings.

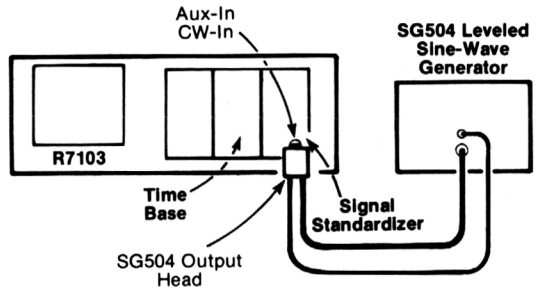


Test Equipment Controls:
Time Base
Time/Div ..... 1 ms
Triggering ..... Auto, AC, External

Signal Standardizer
Test Selector ..... Vert or Horiz Freq Resp

5039-522

a. Set the high-frequency sine-wave generator for eight divisions of displayed signal on the R7103 crt at the generator's reference frequency (6 MHz). The CW Leveled indicator on the signal standardizer must be on at all times.

b. Set the high-frequency sine-wave generator output frequency to 350 MHz.

c. **CHECK**—that the 350 MHz display is at least 5.7 divisions in amplitude.



http://manoman.sqhill.com

# F. VERTICAL SYSTEM

**Equipment Required:** (Numbers correspond to those listed in Table 5-3, Test Equipment.)

2. Amplifier
4. Time base
5. Signal standardizer
11. Low-frequency sine-wave generator
12. High-frequency sine-wave generator
16. 2X attenuator
19. Screwdriver, low capacitance
20. Screwdriver

BEFORE YOU BEGIN:

(1) Perform the Adjustment and Performance Check Power-Up Sequence.

(2) Refer to Section 6, Instrument Options, and the Change Information at the rear of this manual for any modifications which may affect this procedure.

(3) See the **Test Point and Adjustment Locations F** foldout page in Section 8, Diagrams and Circuit Board Illustrations.

## VERTICAL SYSTEM PRELIMINARY CONTROL SETTINGS

POWER switch ..... On
VERTICAL MODE .....RIGHT
TRIGGER SOURCE ..... VERT MODE
INTENSITY..... Counterclockwise
FOCUS..... Midrange
READOUT INTENSITY ....OFF (in detent)
GRAT ILLUM .....As desired
BEAMFINDER ..... Pushbutton out

## F1. ADJUST VERTICAL AMPLIFIER CENTERING (R740, R535)

**F1. SETUP CONDITIONS**

R7103 Controls:
VERTICAL MODE .....ALT

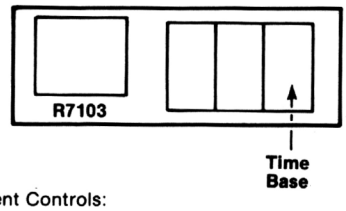


Test Equipment Controls:
Time Base
Time/Div ..... 1 ms
Triggering ..... Auto, AC, Internal
Magnifier ..... X1

5039-523

a. Set the INTENSITY control as desired.

b. **EXAMINE**—the vertical position of the alternating traces (they might appear as a single trace); they should be within 0.5 division of the graticule center line.

c. Set the VERTICAL MODE to LEFT.

d. **ADJUST**—MVA Center adjustment, R740, to align the trace with the center graticule line.

e. Set the VERTICAL MODE to RIGHT.

f. **ADJUST**—Right Ctr adjustment, R535, to align the trace with the center graticule line.



http://manoman.sqhill.com

## F2. CHECK/ADJUST VERTICAL AMPLIFIER GAIN (R830)

**NOTE**

*If the preceding step was not performed, first refer to the Vertical System Preliminary Control Settings, then proceed.*

**F2. SETUP CONDITIONS**

R7103 Controls:
No change in settings.

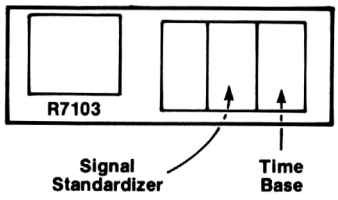


Test Equipment Controls:
Time Base
Time/Div ..... 10 μs
Triggering ..... Auto, AC, External

Signal Standardizer
Test Selector ..... Vert or Horiz Gain
Rep Rate ..... 100 kHz

5039-524

a. Position the signal standardizer display to align the bright center trace with the graticule center line.

b. **CHECK**—for one trace per graticule division within 0.06 division over the center six graticule divisions. Note the exact error for comparison in part f.

c. **ADJUST**—Vert Gain adjustment, R830, for one division between each of the center seven displayed traces, within 0.01 division.

d. Remove the signal standardizer from the RIGHT VERT compartment and install it in the LEFT VERT compartment.

e. Set the VERTICAL MODE to LEFT.

f. **CHECK**—for one trace per graticule division within 0.06 division of the error noted in part b, over the center six graticule divisions.

g. **ADJUST**—if necessary, compromise the setting of Vert Gain adjustment R830 for optimum gain for both LEFT and RIGHT compartments.

## F3. CHECK VERTICAL LOW-FREQUENCY LINEARITY

**NOTE**

*If the preceding step was not performed, first refer to the Vertical System Preliminary Control Settings, then proceed.*

**F3. SETUP CONDITIONS**

R7103 Controls:
VERTICAL MODE ..... RIGHT

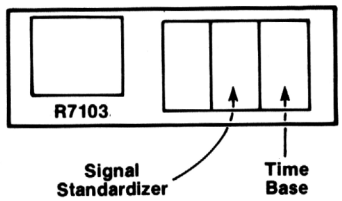


Test Equipment Controls:
Time Base
Time/Div ..... 1 ms
Triggering ..... Auto, AC, Internal

Signal Standardizer
Test Selector ..... Vert or Horiz +Step Resp
Rep Rate ..... 1 kHz

5039-525

a. Set the signal standardizer Amplitude and Position controls so that the display is exactly two divisions in amplitude in the center of the graticule area.

b. **CHECK**—that moving the two-division display vertically causes no more than 0.1 division of compression or expansion anywhere within the graticule area.

c. **ADJUST**—If the specification of part b was not met, perform steps F1, F2, F4, and F5.



http://manoman.sqhill.com

## F4. ADJUST THERMAL COMPENSATIONS (C808, R785, R801, R795, R806, R791, R787, R836)

**NOTE**

*If the preceding step was not performed, first refer to the Vertical System Preliminary Control Settings, then proceed.*

**F4. SETUP CONDITIONS**

R7103 Controls:
TRIGGER SOURCE ..... RIGHT VERT

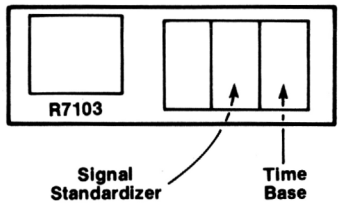


Test Equipment Controls:
Time Base
Time/Div ..... 10 μs
Triggering ..... Auto, AC, Internal

Signal Standardizer
Test Selector ..... Vert or Horiz +Step Resp
Rep Rate ..... 100 kHz

5039-526

a. Set the signal standardizer Position and Amplitude controls for a six-division display centered on the crt.

b. Set the VERTICAL MODE to CHOP.

c. Set the READOUT INTENSITY control for a visible readout display.

d. **EXAMINE**—the readout display for less than 0.05 divisions of jitter and 0.05 divisions of deviation, between switch settings, in the center displayed trace using the time-base sweep rates and signal standardizer rep rates given in Table 5-5.

e. **ADJUST**—Thermal Compensation adjustments as given in Table 5-5 for minimum jitter on the Readout display and minimum deviation of the displayed center trace.

f. **INTERACTION**—The adjustments listed in Table 5-5 may interact with steps F2, F3, F4, and F5; repeat as necessary.

**TABLE 5-5**
**Vertical Compensation Adjustments**
**(Signal Rep Rate vs: Sweep Rate)**

| Adjustment | Signal Standardizer Rep Rate | Sweep Rate |
|---|---|---|
| Comp #1 (A17R785), Comp #7 (A17C808) | 1 MHz | 1 μs |
| Comp #8 (A17R836), Comp #5 (A17R801) | 100 kHz | 10 μs |
| Comp #4 (A17R795) | 10 kHz | 0.1 ms |
| Comp #3 (A17R791) | 1 kHz | 1 ms |
| Comp #6 (A17R806) | 100 Hz | 10 ms |
| Comp #2 (A17R787) | 10 Hz | 50 ms |



http://manoman.sqhill.com

## F5. ADJUST VERTICAL LOW-FREQUENCY COMPENSATION (C538, R530, R525, R520, R515, R512, C638, R630, R625, R620, R615, R612, C705, R715)

**NOTE**

*If the preceding step was not performed, first refer to the Vertical System Preliminary Control Settings, then proceed.*

**F5. SETUP CONDITIONS**

R7103 Controls:
VERTICAL MODE ..... RIGHT VERT
TRIGGER SOURCE ..... VERT MODE

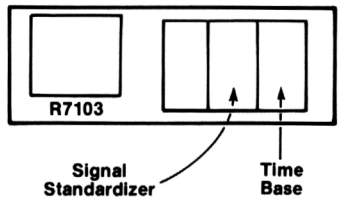


Test Equipment Controls:
Time Base
Time/Div ..... 2 μs
Triggering ..... Auto, AC, Internal

Signal Standardizer
Test Selector ..... Vert or Horiz +Step Resp
Rep Rate ..... 100 kHz

5039-527

a. Set the signal standardizer Amplitude control for a six-division display.

b. Set the time-base triggering and position controls for a stable display.

c. **EXAMINE**—the displayed pulse for optimum flat top, within 0.06 division, with the signal standardizer Rep Rates and time-base sweep rates given in Table 5-6A.

d. **ADJUST**—Compensation adjustments #14, #13, #12, #11, #10 and #9 as given in Table 5-6A for optimum flat top on the displayed waveform.

e. Move the signal standardizer to the LEFT VERT compartment.

f. Set the VERTICAL MODE to LEFT VERT.

g. Set the signal standardizer Rep Rate to 100 kHz and the time-base Time/Div to 2 μs. Set the Amplitude and Position controls for a six-division display, centered in the graticule area.

**TABLE 5-6A**
**Low-Frequency Compensation**
**(Signal Rep Rate vs: Sweep Rate)**

| Adjustment | Signal Standardizer Rep Rate | Sweep Rate |
|---|---|---|
| Comp #14 (A16C538), Comp #13 (A16R530) | 100 kHz | 2.0 μs |
| Comp #12 (A16R525) | 10 kHz | 20.0 μs |
| Comp #11 (A16R520) | 1 kHz | 0.2 ms |
| Comp #10 (A16R515) | 100 Hz | 2.0 ms |
| Comp #9 (A16R512) | 10 Hz | 20.0 ms |

**TABLE 5-6B**
**Low-Frequency Compensation**
**(Signal Rep Rate vs: Sweep Rate)**

| Adjustment | Signal Standardizer Rep Rate | Sweep Rate |
|---|---|---|
| Comp #20 (A15C638), Comp #19 (A16R630) | 100 kHz | 2.0 μs |
| Comp #18 (A16R625) | 10 kHz | 20 μs |
| Comp #17 (A16R620) | 1 kHz | 0.2 ms |
| Comp #16 (A16R615) | 100 Hz | 2.0 ms |
| Comp #15 (A16R612) | 10 Hz | 20.0 ms |

h. **EXAMINE**—the displayed pulse for optimum flat top within 0.06 division with the signal standardizer Rep Rate and the time-base sweep rates given in Table 5-6B.

i. **ADJUST**—Compensation adjustments #20, #19, #18, #17, #16, and #15 as given in Table 5-6B for optimum flat top on the displayed waveform.

j. Set the signal standardizer Rep Rate to 1 MHz.

k. Set the time base to 2 ns/division. Set the triggering controls for a stable display triggered on the pulse's positive transition.

l. **EXAMINE**—the displayed pulse for optimum corner and flat top within the following limits: Aberrations in the first 5 nanoseconds after the 50% point of the step should not exceed 0.3 division peak-to-peak. Aberrations from 5 to 10 nanoseconds after the 50% point of the step should not exceed 0.18 division



http://manoman.sqhill.com

peak-to-peak. Aberrations after 10 nanoseconds of the 50% point of the step should not exceed 0.06 divisions peak-to-peak except to allow 0.12 division of aberrations for delay-line termination at about 105 nanoseconds from the step. Rise time of the pulse should be 350 picoseconds between the 10% and 90% points.

m. **ADJUST**—Comp #21 and #22 adjustments, C705 and R705, respectively, for optimum rise time (less than 350 picoseconds) and flat top with minimum aberrations within the limits given in part I. Use the low-capacitance screwdriver to adjust the variable capacitors. Repeat the complete adjustment procedure as necessary to obtain optimum step response.

n. **INTERACTION**—adjustments in step F5 interact with steps F2, F3, and F4; repeat as necessary.

o. Move the signal standardizer to the RIGHT VERT compartment and set the VERTICAL MODE to RIGHT.

p. **ADJUST**—If necessary, compromise the high-frequency Comp #21 adjustment, C705, for optimum pulse response for both vertical compartments.

q. **EXAMINE**—the displayed pulse for optimum square corner and flat top with aberrations within the limits given in part I.

## F6. CHECK VERTICAL AMPLIFIER 1 GHz GAIN (0° to +35°C)

**NOTE**

*If the preceding step was not performed, first refer to the Vertical System Preliminary Control Settings, then proceed.*

**F6. SETUP CONDITIONS**

R7103 Controls:
VERTICAL MODE ..... RIGHT

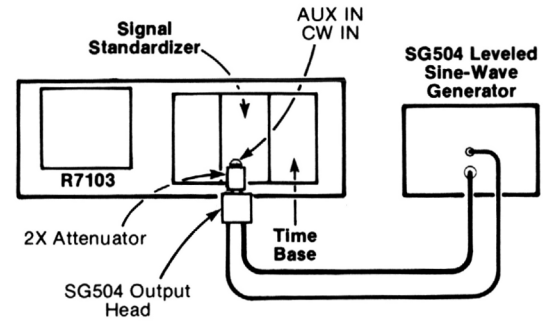


Test Equipment Controls:
Time Base
Time/Div ..... 0.1 ms
Triggering ..... Auto, AC, External

Signal Standardizer
Test Selector ..... Vert or Horiz Freq Resp

High-Frequency Sine-Wave Generator
Reference Frequency ..... 6 MHz

5039-528

a. Set the signal standardizer Amplitude control fully clockwise.

b. Connect the high-frequency sine-wave generator to the signal standardizer Aux In Cw In (Freq Resp) input with a 2X attenuator.

c. Set the high-frequency sine-wave generator for a 10-division display at the reference frequency (between 6 and 50 megahertz) centered on the graticule. (To obtain a 10-division display, first set the high-frequency sine-wave generator to produce an eight-division display, then vertically position the display one division down and increase the amplitude of the sine-wave generator signal to return the top of the display to the top of the graticule.)



http://manoman.sqhill.com

d. Set the signal standardizer Amplitude for a six-division display, centered on the graticule. (The CW Leveled indicator should be lit.)

e. Without changing the output amplitude, increase the generator frequency until the displayed amplitude is reduced to five divisions. If the CW Leveled indicator extinguishes, increase the amplitude of the sine-wave generator signal until the light just turns on.

**NOTE**

*The signal standardizer CW Leveled light must be on and the sine-wave generator must be properly connected for a valid check. Refer to the signal standardizer and high-frequency sine-wave generator manuals.*

f. **CHECK**—that the sine-wave generator frequency is 1 gigahertz or higher (verifies 1 gigahertz gain).

g. Move the signal standardizer to the LEFT VERT compartment (leave signal connected) and set the VERTICAL MODE to LEFT.

h. **CHECK**—repeat parts d. through f. for the LEFT VERT compartment.

i. **ADJUST**—perform steps F1, F2, F3, F4, and F5.

## F7. CHECK VERTICAL CHANNEL ISOLATION

**NOTE**

*If the preceding step was not performed, first refer to the Vertical System Preliminary Control Settings, then proceed.*

**F7. SETUP CONDITIONS**

R7103 Controls:
VERTICAL MODE ..... RIGHT

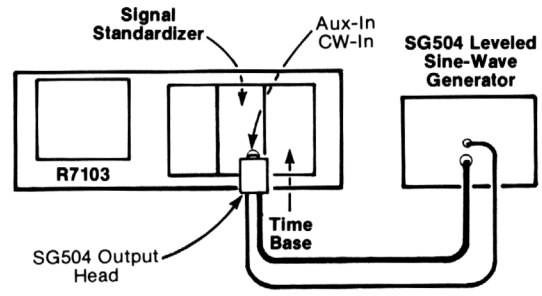


Test Equipment Controls:
Time Base
Time/Div ..... 1 ms
Triggering ..... Auto, AC, Internal

Signal Standardizer
Test Selector ..... Vert or Horiz Aux In

High-Frequency Sine-Wave Generator ..... 1 GHz

5039-529

a. Set the output of the high-frequency sine-wave generator and the signal standardizer Amplitude control for eight divisions of deflection at 1 gigahertz.

b. Set the VERTICAL MODE to LEFT.

c. **CHECK**—the crt display amplitude for 0.1 division or less of the 1 gigahertz signal (verifies isolation at least 80:1 at 1 gigahertz).

d. Move the signal standardizer to the LEFT VERT compartment without disturbing the connections.

e. Set the VERTICAL MODE to RIGHT.

f. **CHECK**—the display amplitude for 0.1 division or less of the 1 gigahertz signal (verifies isolation at least 80:1 at 1 gigahertz).



http://manoman.sqhill.com

g. Set the VERTICAL MODE to LEFT.

h. Connect the low-frequency sine-wave generator to the signal standardizer Aux In-CW In connector.

i. Set the low-frequency sine-wave generator for eight divisions of deflection at 100 megahertz.

j. Set the VERTICAL MODE to RIGHT.

k. **CHECK**—the display amplitude for 0.05 division or less of 100 megahertz signal (verifies 100 megahertz isolation of at least 160:1).

l. Move the signal standardizer to the RIGHT VERT compartment without disturbing the connections.

m. Set the VERTICAL MODE to LEFT.

n. **CHECK**—the display amplitude for 0.05 division or less of 100 MHz signal (verifies isolation of at least 60:1 from dc to 100 MHz).

## F8. CHECK VERTICAL DISPLAY MODES

**NOTE**

*If the preceding step was not performed, first refer to the Vertical System Preliminary Control Settings, then proceed.*

**F8. SETUP CONDITIONS**

R7103 Controls:
VERTICAL MODE ..... RIGHT

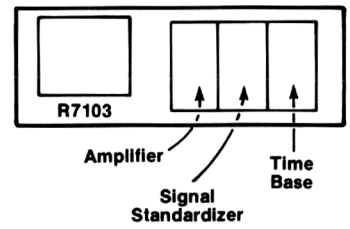


Test Equipment Controls:
Time Base
Time/Div ..... 1 ms
Triggering ..... Auto, AC, Internal

Amplifier
Volts/Div ..... 0.1 V
Input Coupling ..... DC

Signal Standardizer
Test Selector ..... Vert or Horiz Aux In

5039-530

a. Position the trace to the upper half of the graticule area with the signal standardizer Position control.

b. Set the VERTICAL MODE to LEFT and position the trace to the lower half of the graticule area with the left vertical position control.

c. **CHECK**—the display for two traces in the ALT and CHOP positions of the VERTICAL MODE selector.

d. Set the VERTICAL MODE to ADD.

e. **CHECK**—the display for a single trace that can be positioned vertically with either left or right vertical Position control.



http://manoman.sqhill.com

# G. READOUT SYSTEM

**Equipment Required:** (Numbers correspond to those listed in Table 5-3, Test Equipment.)

2. Amplifier (dual trace)
4. Time base
20. Screwdriver

BEFORE YOU BEGIN:

(1) Perform the Adjustment and Performance Check Power-Up Sequence.

(2) Refer to Section 6, Instrument Options, and the Change Information at the rear of this manual for any modifications which may affect this procedure.

(3) See the **Test Point and Adjustment Locations G** foldout page in Section 8, Diagrams and Circuit Board Illustrations.

## READOUT SYSTEM PRELIMINARY CONTROL SETTINGS

POWER ..... On
VERTICAL MODE ..... RIGHT
TRIGGER SOURCE ..... VERT MODE
INTENSITY ..... Midrange
READOUT INTENSITY ..... OFF (in detent)
GRAT ILLUM ..... Midrange
BEAMFINDER ..... Pushbutton out
Readout Selector Switch ... Free Run (see Test Point and Adjustment Locations G.)

## G1. ADJUST READOUT VERTICAL SEPARATION AND CENTERING (R3490, R701, R1025, R1035)

**G1. SETUP CONDITIONS**

R7103 Controls:
No change in settings.

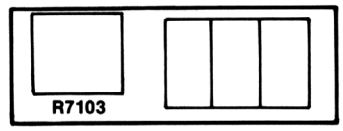


Test Equipment Controls:
No equipment necessary.

5039-531

a. Turn the POWER off.

b. Remove Q3416 from its socket on the A15 Readout System Board.

c. Set the POWER switch to On.

d. Set the READOUT INTENSTIY control for visible characters (all zeros).

**NOTE**

*The following tolerances are provided as guides to correct instrument operation and are not instrument specifications.*

e. **EXAMINE**—the crt display for two rows of zeros, 30 zeros to a row with no character overlap. The two rows of zeros should be located vertically in the middle of the top and bottom divisions of the graticule (see Fig. 5-2).



http://manoman.sqhill.com

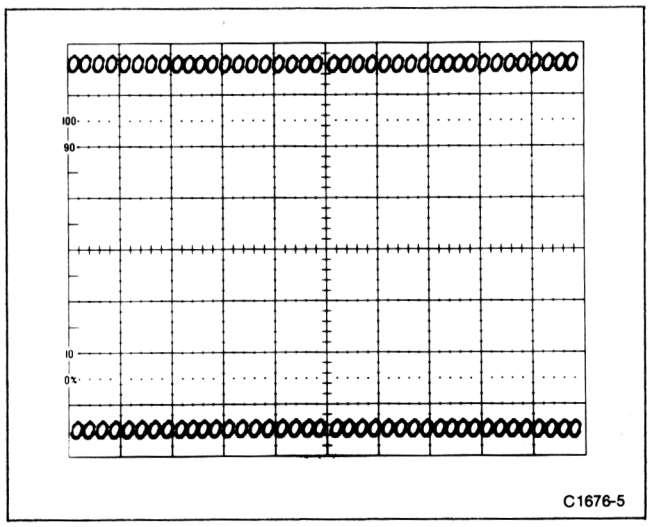


**Figure 5-2. Readout display with Q3416 removed.**

**NOTE**

*The MVA Center (Main Vertical Amplifier) adjustment, R740, must be correct before making the next adjustment. Refer to F. Vertical System procedure.*

f. **ADJUST**—Vertical Separation adjustment, R3490, and R/O Center adjustment, R701, to position the two rows of readout characters to the middle of the top and bottom divisions of the graticule.

g. **EXAMINE**—the display for two rows of zeros, 30 zeros to each row, with no character overlap. Total length of each row of character is between 9.5 and 10 divisions.

h. **ADJUST**—RO Ctr adjustment, R1025, and RO Gain, R1035, to horizontally center the zeros display and set the length of each row of characters between 9.5 and 10 divisions.

i. Turn the POWER off and replace Q3416 in its socket.

j. Turn the POWER on.

## G2. ADJUST FULL-CHARACTER SCAN (R3437)

**NOTE**

*If the preceding step was not performed, first refer to the Readout System Preliminary Control Settings, then proceed.*

**G2. SETUP CONDITIONS**

R7103 Controls:
POWER ..... On
VERTICAL MODE ..... RIGHT

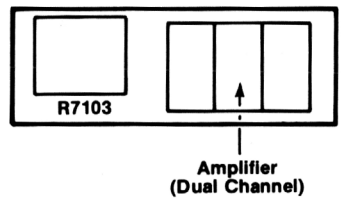


Test Equipment Controls:
Amplifier
Volts/Div, both ..... 50 mV/div
Display Mode ..... Dual trace

5039-532

a. **EXAMINE**—the displayed characters for completeness without overscanning; overscanning causes a bright dot where traces overlap.

b. **ADJUST**—Character Scan adjustment R3437 for fully scanned characters without overscanning. The m and the 5 will show the most change.



http://manoman.sqhill.com

## G3. ADJUST COLUMN AND ROW MATCH (R3407, R3422)

**NOTE**

*If the preceding step was not performed, first refer to the Readout System Preliminary Control Settings, then proceed.*

**G3. SETUP CONDITIONS**

R7103 Controls:
No change in settings.

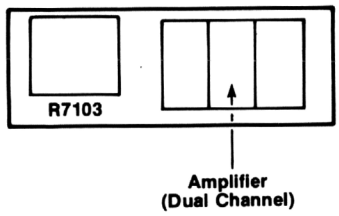


Test Equipment Controls:
Amplifier
Display Mode ..... Alt

5039-533

a. Press and hold one of the amplifier trace-identify buttons.

b. **EXAMINE**—the readout display for correct indication of the word "IDENTIFY." If the readout display is incorrect, adjustment is required.

c. **ADJUST**—Column Match adjustment, R3407, and Row Match adjustment, R3422, for correct readout of "IDENTIFY." Set these adjustments to the center of the adjustment range which provides correct readout indication. Release the amplifier trace-identify button.

## G4. CHECK READOUT MODES

**NOTE**

*If the preceding step was not performed, first refer to the Readout System Preliminary Control Settings, then proceed.*

**G4. SETUP CONDITIONS**

R7103 Controls:
No change in settings.

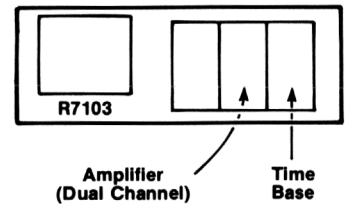


Test Equipment Controls:
Time Base
Time/Div ..... 1 ms
Triggering ..... Auto, AC, Internal

5039-534

a. Set the READOUT INTENSITY control for a visible display.

b. **CHECK**—set the time base to several sweep rates throughout its range and check that the readout characters are displayed independently of the sweep.

c. Set the READOUT +GATE or EXT switch to +GATE and the READOUT INTENSITY control to PULSED.

d. Set the READOUT PRESET control for a visible readout display.

e. Set the time base for a free-running (not triggered) sweep of 0.2 second/division.

f. **CHECK**—that the readout characters are blanked while the sweep is running, and are displayed immediately after the end of the sweep; each character encoded by the plug-in units is displayed only once for each sweep.

g. Set the READOUT +GATE or EXT switch to EXT.

h. **CHECK**—press the READOUT MAN pushbutton and notice that one frame of readout is displayed.



http://manoman.sqhill.com

# H. PHOTOGRAPHIC WRITING RATE

**Equipment Required:** (Numbers correspond to those listed in Table 5-3, Test Equipment.)

2. Amplifier
4. Time base
7. Camera
12. High-frequency sine-wave generator
20. Screwdriver

BEFORE YOU BEGIN:

(1) Perform the Adjustment and Performance Check Power-Up Sequence.

(2) Refer to Section 6, Instrument Options, and the Change Information at the rear of this manual for any modifications which may affect this procedure.

(3) See the **Test Point and Adjustment Locations H** foldout page in Section 8, Diagrams and Circuit Board Illustrations.

## PHOTOGRAPHIC WRITING RATE PRELIMINARY CONTROL SETTINGS

POWER ..... On
VERTICAL MODE .....RIGHT
TRIGGER SOURCE ..... VERT MODE
INTENSITY..... Midrange
READOUT INTENSITY ....OFF (in detent)
GRAT ILLUM ..... PULSED
BEAMFINDER ..... Pushbutton out

## H1. CHECK/ADJUST PHOTOGRAPHIC WRITING RATE (R1720)

**H1. SETUP CONDITIONS**

R7103 Controls:
GRAT ILLUM +GATE or EXT .....+GATE

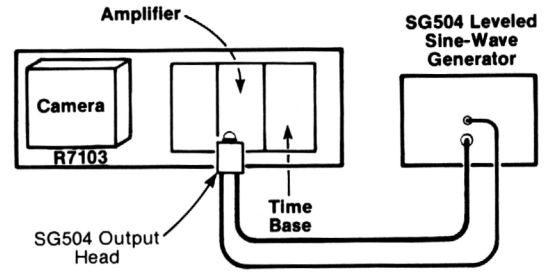


Test Equipment Controls:
Amplifier
Volts/Div .....0.5 V
Input Coupling ..... DC

Time Base
Time/Div .....5 ns
Triggering ..... Auto, AC, Internal
Magnifier ..... X10

High-Frequency Sine-Wave Generator
Frequency .....1 GHz

Camera
Mode.....Time
Aperture..... f 1.9

5039-535

a. Set the INTENSITY control for a visible display.

b. Set the time-base sweep magnifier to X10.

c. Set the high-frequency sine-wave generator output amplitude to display 7.5 divisions on the R7103 crt.



http://manoman.sqhill.com

d. Set the FOCUS and ASTIG controls for a well-defined display.

e. Set the time base to single-sweep mode.

f. Sequentially press the time-base single-sweep-reset control and set the GRAT ILLUM PRESET control to illuminate the graticule.

g. Focus the camera.

h. Install 3000 ASA film in the camera and close the camera viewing port.

i. Rotate the INTENSITY control fully clockwise.

j. Press the camera shutter button.

k. Press the time base Single Sweep Reset button.

l. Press the camera shutter button.

m. Develop the film.

n. **CHECK**—that the photograph shows the 1 GHz sine-wave clearly (Fig. 5-3 is a typical waveform).

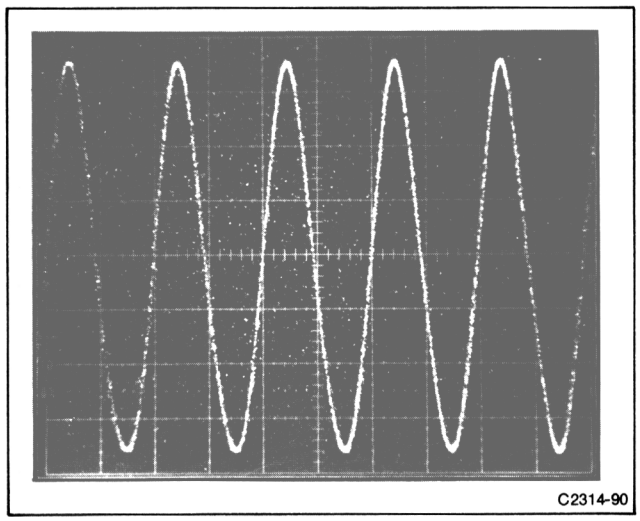


**Figure 5-3. Typical display of Photographic Writing Rate test.**

o. **ADJUST**—if necessary, rotate the MCP Output adjustment, R1720, clockwise to increase the photographic writing rate. Background scintillation can be reduced by rotating R1720 counterclockwise at the expense of the photographic writing rate. Adjustment R1720 should be set to the lowest usable photographic writing rate. Unnecessarily high MCP gain may shorten the life of the crt.

This concludes the Part II—Adjustment and Performance Check procedure.



http://manoman.sqhill.com

# INSTRUMENT OPTIONS

Your instrument may have one or more options. A brief description of each available option is given in the following discussion, and in the appropriate sections of this manual. Refer to Table 6-1 and the Table of Contents for location of option information. For further information on instrument options, see your Tektronix Products catalog or contact your Tektronix Field Office.

## LIST OF OPTIONS

### OPTION A1

The standard power cord is replaced with the Universal European 220 V type power cord (Tektronix Part 161-0066-09).

### OPTION A2

The standard power cord is replaced with the United Kingdom 240 V type power cord (Tektronix Part 161-0066-01).

### OPTION A3

The standard power cord is replaced with the Australian 240 V type power cord (Tektronix Part 161-0066-11).

### OPTION A4

The standard power cord is replaced with the North American 240 V type power cord (Tektronix Part 161-0066-12).

### OPTION A5

The standard power cord is replaced with the Switzerland 220 V type power cord (Tektronix Part 161-0154-00).

## HOW TO IDENTIFY THE OPTIONS

### OPTIONS A1 THROUGH A5

To identify Power-Cord Options A1, A2, A3, A4, and A5 refer to Table 1-2.



http://manoman.sqhill.com

**TABLE 6-1**
**Option Information Locator**

| Option | Location in Manual | | Information |
|---|---|---|---|
| | Section | Heading | |
| A1 | 1 General Information | Power-Cord Information Table 1-2 | Lists details of Option A1 |
| | 3 Instrument Options | Option A1 | Gives a brief description of Option A1 |
| A2 | 1 General Information | Power-Cord Information Table 1-2 | Lists details of Option A2 |
| | 3 Instrument Options | Option A2 | Gives a brief description of Option A2 |
| A3 | 1 General Information | Power-Cord Information | Lists details of Option A3 Table 1-2 |
| | 3 Instrument Options | Option A3 | Gives a brief description of Option A3 |
| A4 | 1 General Information | Power-Cord Information | Lists details of Option A4 Table 1-2 |
| | 3 Instrument Options | Option A4 | Gives a brief description of Option A4 |
| A5 | 1 General Information | Power-Cord Information | Lists details of Option A5 Table 1-2 |
| | 3 Instrument Options | Option A5 | Gives a brief description of Option A5 |



http://manoman.sqhill.com

# REPLACEABLE ELECTRICAL PARTS

## PARTS ORDERING INFORMATION

Replacement parts are available from or through your local Tektronix, Inc. Field Office or representative.

Changes to Tektronix instruments are sometimes made to accommodate improved components as they become available, and to give you the benefit of the latest circuit improvements developed in our engineering department. It is therefore important, when ordering parts, to include the following information in your order: Part number, instrument type or number, serial number, and modification number if applicable.

If a part you have ordered has been replaced with a new or improved part, your local Tektronix, Inc. Field Office or representative will contact you concerning any change in part number.

Change information, if any, is located at the rear of this manual.

### LIST OF ASSEMBLIES

A list of assemblies can be found at the beginning of the Electrical Parts List. The assemblies are listed in numerical order. When the complete component number of a part is known, this list will identify the assembly in which the part is located.

### CROSS INDEX-MFR. CODE NUMBER TO MANUFACTURER

The Mfr. Code Number to Manufacturer index for the Electrical Parts List is located immediately after this page. The Cross Index provides codes, names and addresses of manufacturers of components listed in the Electrical Parts List.

### ABBREVIATIONS

Abbreviations conform to American National Standard Y1.1.

### COMPONENT NUMBER (column one of the Electrical Parts List)

A numbering method has been used to identify assemblies, subassemblies and parts. Examples of this numbering method and typical expansions are illustrated by the following:

**Example a.**

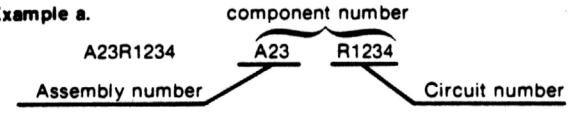


**Read: Resistor 1234 of Assembly 23**

**Example b.**

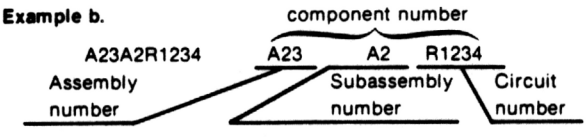


**Read: Resistor 1234 of Subassembly 2 of Assembly 23**

Only the circuit number will appear on the diagrams and circuit board illustrations. Each diagram and circuit board illustration is clearly marked with the assembly number. Assembly numbers are also marked on the mechanical exploded views located in the Mechanical Parts List. The component number is obtained by adding the assembly number prefix to the circuit number.

The Electrical Parts List is divided and arranged by assemblies in numerical sequence (e.g., assembly A1 with its subassemblies and parts, precedes assembly A2 with its subassemblies and parts).

Chassis-mounted parts have no assembly number prefix and are located at the end of the Electrical Parts List.

### TEKTRONIX PART NO. (column two of the Electrical Parts List)

Indicates part number to be used when ordering replacement part from Tektronix.

### SERIAL/MODEL NO. (columns three and four of the Electrical Parts List)

Column three (3) indicates the serial number at which the part was first used. Column four (4) indicates the serial number at which the part was removed. No serial number entered indicates part is good for all serial numbers.

### NAME & DESCRIPTION (column five of the Electrical Parts List)

In the Parts List, an Item Name is separated from the description by a colon (:). Because of space limitations, an Item Name may sometimes appear as incomplete. For further Item Name identification, the U.S. Federal Cataloging Handbook H6-1 can be utilized where possible.

### MFR. CODE (column six of the Electrical Parts List)

Indicates the code number of the actual manufacturer of the part. (Code to name and address cross reference can be found immediately after this page.)

### MFR. PART NUMBER (column seven of the Electrical Parts List)

Indicates actual manufacturers part number.



http://manoman.sqhill.com

CROSS INDEX—MFR. CODE NUMBER TO MANUFACTURER

| Mfr. Code | Manufacturer | Address | City, State, Zip |
|---|---|---|---|
| 0000L | MATSUSHITA ELECTRIC | 200 PARK AVENUE, 54TH FLOOR | NEW YORK, NY 10017 |
| 000LI | TOPTRON CORP | | TOKYO, JAPAN |
| 00853 | SANGAMO ELECTRIC CO., S. CAROLINA DIV. | P.O. BOX 128 | PICKENS, SC 29671 |
| 01121 | ALLEN-BRADLEY COMPANY | 1201 2ND STREET SOUTH | MILWAUKEE, WI 53204 |
| 01281 | TRW ELECTRONIC COMPONENTS, SEMICONDUCTOR OPERATIONS | 14520 AVIATION BLVD. | LAWNDALE,CA 90260 |
| 01295 | TEXAS INSTRUMENTS, INC. SEMICONDUCTOR GROUP | P.O. BOX 5012 | DALLAS, TX 75222 |
| 02114 | FERROXCUBE CORPORATION | PO BOX 359, MARION ROAD | SAUGERTIES, NY 12477 |
| 02735 | RCA CORPORATION, SOLID STATE DIVISION | ROUTE 202 | SOMERVILLE, NY 08876 |
| 02777 | HOPKINS ENGINEERING COMPANY | 12900 FOOTHILL BLVD. | SAN FERNANDO, CA 91342 |
| 03508 | GENERAL ELECTRIC COMPANY, SEMI-CONDUCTOR PRODUCTS DEPARTMENT | ELECTRONICS PARK | SYRACUSE, NY 13201 |
| 03888 | KDI PYROFILM CORPORATION | 60 S JEFFERSON ROAD | WHIPPANY, NJ 07981 |
| 04222 | AVX CERAMICS, DIVISION OF AVX CORP. | P O BOX 867 | MYRTLE BEACH, SC 29577 |
| 04713 | MOTOROLA, INC., SEMICONDUCTOR PROD. DIV. | 5005 E MCDOWELL RD,PO BOX 20923 | PHOENIX, AZ 85036 |
| 05828 | GENERAL INSTRUMENT CORP ELECTRONIC SYSTEMS DIV. | 600 W JOHN ST. | HICKSVILLE LI, NY 11802 |
| 07263 | FAIRCHILD SEMICONDUCTOR, A DIV. OF FAIRCHILD CAMERA AND INSTRUMENT CORP. | 464 ELLIS STREET | MOUNTAIN VIEW, CA 94042 |
| 08806 | GENERAL ELECTRIC CO., MINIATURE LAMP PRODUCTS DEPARTMENT | NELA PARK | CLEVELAND, OH 44112 |
| 12697 | CLAROSTAT MFG. CO., INC. | LOWER WASHINGTON STREET | DOVER, NH 03820 |
| 12954 | SIEMENS CORPORATION, COMPONENTS GROUP | 8700 E THOMAS RD, P O BOX 1390 | SCOTTSDALE, AZ 85252 |
| 12969 | UNITRODE CORPORATION | 580 PLEASANT STREET | WATERTOWN, MA 02172 |
| 13511 | AMPHENOL CARDRE DIV., BUNKER RAMO CORP. | | LOS GATOS, CA 95030 |
| 14433 | ITT SEMICONDUCTORS | 3301 ELECTRONICS WAY P O BOX 3049 | WEST PALM BEACH, FL 33402 |
| 14552 | MICRO SEMICONDUCTOR CORP. | 2830 E FAIRVIEW ST. | SANTA ANA, CA 92704 |
| 14752 | ELECTRO CUBE INC. | 1710 S. DEL MAR AVE. | SAN GABRIEL, CA 91776 |
| 14936 | GENERAL INSTRUMENT CORP., SEMICONDUCTOR PRODUCTS GROUP | P.O. BOX 600,600 W. JOHN ST. | HICKSVILLE, NY 11802 |
| 15454 | RODAN INDUSTRIES, INC. | 2905 BLUE STAR ST. | ANAHEIM, CA 92806 |
| 17856 | SILICONIX, INC. | 2201 LAURELWOOD DRIVE | SANTA CLARA, CA 95054 |
| 18324 | SIGNETICS CORP. | 811 E. ARQUES | SUNNYVALE, CA 94086 |
| 19396 | ILLINOIS TOOL WORKS, INC. PAKTRON DIV. | 900 FOLLIN LANE, SE | VIENNA, VA 22180 |
| 19701 | ELECTRA-MIDLAND CORP., MEPCO ELECTRA INC. | P O BOX 760 | MINERAL WELLS, TX 76067 |
| 20932 | EMCON DIV OF ILLINOIS TOOL WORKS INC. | 11620 SORRENTO VALLEY RD P O BOX 81542 | SAN DIEGO, CA 92121 |
| 22526 | BERG ELECTRONICS, INC. | YOUK EXPRESSWAY | NEW CUMBERLAND, PA 17070 |
| 24546 | CORNING GLASS WORKS, ELECTRONIC COMPONENTS DIVISION | 550 HIGH STREET | BRADFORD, PA 16701 |
| 24931 | SPECIALITY CONNECTOR CO., INC. | 2620 ENDRESS PLACE | GREENWOOD, IN 46142 |
| 27014 | NATIONAL SEMICONDUCTOR CORP. | 2900 SEMICONDUCTOR DR. | SANTA CLARA, CA 95051 |
| 31918 | IEE/SCHADOW INC. | 8081 WALLACE ROAD | EDEN PRAIRIE, MN 55343 |
| 32997 | BOURNS, INC., TRIMPOT PRODUCTS DIV. | 1200 COLUMBIA AVE. | RIVERSIDE, CA 92507 |
| 50157 | MIDWEST COMPONENTS INC. | P. O. BOX 787 1981 PORT CITY BLVD. | MUSKEGON, MI 49443 |
| 50434 | HEWLETT-PACKARD COMPANY | 640 PAGE MILL ROAD | PALO ALTO, CA 94304 |
| 50558 | ELECTRONIC CONCEPTS, INC. | 526 INDUSTRIAL WAY WEST | EATONTOWN, NJ 07724 |
| 51406 | MURATA CORPORATION OF AMERICA | 2 WESTCHESTER PLAZA | ELMSFORD, NY 10523 |
| 51642 | CENTRE ENGINEERING INC. | 2820 E COLLEGE AVENUE | STATE COLLEGE, PA 16801 |
| 51984 | NEC AMERICA INC. RADIO AND TRANSMISSION DIV. | 2990 TELESTAR CT. SUITE 212 | FALLS CHURCH, VA 22042 |
| 52306 | HIGH VOLTAGE DEVICES, INC. | 7485 AVENUE 304 | VISALIA, CA 93277 |
| 53184 | XCITON CORPORATION | 5 HEMLOCK STREET | LATHAM, NY 12110 |
| 54473 | MATSUSHITA ELECTRIC, CORP. OF AMERICA | 1 PANASONIC WAY | SECAUCUS, NJ 07094 |
| 55680 | NICHICON/AMERICA/CORP. | 6435 N PROESEL AVENUE | CHICAGO, IL 60645 |
| 56289 | SPRAGUE ELECTRIC CO. | 87 MARSHALL ST. | NORTH ADAMS, MA 01247 |
| 57668 | R-OHM CORP. | 16931 MILLIKEN AVE. | IRVINE, CA 92713 |
| 59660 | TUSONIX INC. | 2155 N FORBES BLVD | TUCSON, AZ 85705 |
| 59821 | CENTRALAB INC SUB NORTH AMERICAN PHILIPS CORP | 7158 MERCHANT AVE | EL PASO, TX 79915 |
| 60705 | CERA-MITE CORP. | 1327 6TH AVE. | GRAFTON, WI 53024 |
| 71400 | BUSSMAN MFG., DIVISION OF MCGRAW-EDISON CO. | 2536 W. UNIVERSITY ST. | ST. LOUIS, MO 63107 |
| 71590 | CENTRALAB ELECTRONICS, DIV. OF GLOBE-UNION, INC. | P O BOX 858 | FORT DODGE, IA 50501 |



http://manoman.sghill.com

CROSS INDEX—MFR. CODE NUMBER TO MANUFACTURER

| Mfr. Code | Manufacturer | Address | City, State, Zip |
|---|---|---|---|
| 72982 | ERIE TECHNOLOGICAL PRODUCTS, INC. | 644 W. 12TH ST. | ERIE, PA 16512 |
| 73138 | BECKMAN INSTRUMENTS, INC., HELIPOT DIV. | 2500 HARBOR BLVD. | FULLERTON, CA 92634 |
| 73899 | JFD ELECTRONICS COMPONENTS CORP. | PINETREE ROAD | OXFORD, NC 27565 |
| 74276 | SIGNALITE DIV., GENERAL INSTRUMENT CORP. | 1933 HECK AVE. | NEPTUNE, NJ 07753 |
| 75042 | TRW ELECTRONIC COMPONENTS, IRC FIXED RESISTORS, PHILADELPHIA DIVISION | 401 N. BROAD ST. | PHILADELPHIA, PA 19108 |
| 76493 | BELL INDUSTRIES, INC., MILLER, J. W., DIV. | 19070 REYES AVE., P O BOX 5825 | COMPTON, CA 90224 |
| 77342 | AMF INC., POTTER AND BRUMFIELD DIV. | 200 RICHLAND CREEK DRIVE | PRINCETON, IN 47670 |
| 80009 | TEKTRONIX, INC. | P O BOX 500 | BEAVERTON, OR 97077 |
| 80031 | ELECTRA-MIDLAND CORP., MEPCO DIV. | 22 COLUMBIA ROAD | MORRISTOWN, NJ 07960 |
| 81073 | GRAYHILL, INC. | 561 HILLGROVE AVE., PO BOX 373 | LA GRANGE, IL 60525 |
| 82389 | SWITCHCRAFT, INC. | 5555 N. ELSTON AVE. | CHICAGO, IL 60630 |
| 82877 | ROTRON, INC. | 7-9 HASBROUCK LANE | WOODSTOCK, NY 12498 |
| 83003 | VARO, INC. | P O BOX 411, 2203 WALNUT STREET | GARLAND, TX 75040 |
| 84411 | TRW ELECTRONIC COMPONENTS, TRW CAPACITORS | 112 W. FIRST ST. | OGALLALA, NE 69153 |
| 90201 | MALLORY CAPACITOR CO., DIV. OF P. R. MALLORY AND CO., INC. | 3029 E. WASHINGTON STREET P. O. BOX 372 | INDIANAPOLIS, IN 46206 |
| 91637 | DALE ELECTRONICS, INC. | P. O. BOX 609 | COLUMBUS, NE 68601 |
| 91836 | KINGS ELECTRONICS CO., INC. | 40 MARBLEDALE ROAD | TUCKAHOE, NY 10707 |
| 93410 | ESSEX INTERNATIONAL, INC., CONTROLS DIV. LEXINGTON PLANT | P. O. BOX 1007 | MANSFIELD, OH 44903 |
| 93958 | REPUBLIC ELECTRONICS CORPORATION | 176 E 7TH STREET | PATERSON, NJ 07524 |
| 95275 | VITRAMON, INC. | P O BOX 544 | BRIDGEPORT, CT 06601 |
| 96733 | SAN FERNANDO ELECTRIC MFG CO | 1501 FIRST ST | SAN FERNANDO, CA 91341 |
| S3774 | OSHINO ELECTRIC LAMP WORKS LTD | 5 2 MINAMI SHINAGAWA 2 CHORE SHINAGAWA KU | TOKYO, JAPAN |



http://manoman.sqhill.com

| Component No. | Tektronix Part No. | Serial/Model No. Eff | Dscont | Name & Description | Mfr Code | Mfr Part Number |
|---|---|---|---|---|---|---|
| | | | | ASSEMBLIES | | |
| A1 | 670-4895-20 | | | CKT BOARD ASSY:FRONT PANEL | 80009 | 670-4895-20 |
| A3 | 670-4778-01 | | | CKT BOARD ASSY:TRIGGER LIGHT | 80009 | 670-4778-01 |
| A5 | 670-8411-00 | | | CKT BOARD ASSY:MODE SWITCH | 80009 | 670-8411-00 |
| A6 | 670-8412-00 | | | CKT BOARD ASSY:MAIN INTERFACE | 80009 | 670-8412-00 |
| A7 | 670-5098-00 | | | CKT BOARD ASSY:TRIGGER A FOLLOWER | 80009 | 670-5098-00 |
| A10 | 670-5096-00 | | | CKT BOARD ASSY:HORIZONTAL A FOLLOWER | 80009 | 670-5096-00 |
| A11 | 670-5097-00 | | | CKT BOARD ASSY:VERTICAL CHANNEL FOLLOWER | 80009 | 670-5097-00 |
| A12 | 670-5097-00 | | | CKT BOARD ASSY:VERTICAL CHANNEL FOLLOWER | 80009 | 670-5097-00 |
| A13 | 670-8408-00 | | | CKT BOARD ASSY:LOGIC | 80009 | 670-8408-00 |
| A14 | 670-8409-00 | | | CKT BOARD ASSY:TRIGGER SELECTOR | 80009 | 670-8409-00 |
| A15 | 670-1885-11 | | | CKT BOARD ASSY:READOUT | 80009 | 670-1885-11 |
| A16 | 670-4769-02 | | | CKT BOARD ASSY:VERTICAL CHANNEL SWITCH | 80009 | 670-4769-02 |
| A17 | 672-0802-01 | | | CKT BOARD ASSY:VERTICAL AMPLIFIER | 80009 | 672-0802-01 |
| A17A1 | 670-5616-00 | | | CKT BOARD ASSY:VERTICAL CRT FLEX CON | 80009 | 670-5616-00 |
| A17A1 | —— —— | | | (NO REPLACEABLE SUBPARTS) | | |
| A18 | 672-0800-00 | | | CKT BOARD ASSY:CRT TERMINATION | 80009 | 672-0800-00 |
| A18A1 | 670-5616-00 | | | CKT BOARD ASSY:VERTICAL CRT FLEX CON | 80009 | 670-5616-00 |
| A18A1 | —— —— | | | (NO REPLACEABLE SUBPARTS) | | |
| A19 | 672-0140-00 | | | CKT BOARD ASSY:HORIZONTAL AMPLIFIER | 80009 | 672-0140-00 |
| A19A1 | 670-5094-00 | | | CKT BOARD ASSY:HORIZONTAL CRT FLEX CON | 80009 | 670-5094-00 |
| A19A1 | —— —— | | | (NO REPLACEABLE SUBPARTS) | | |
| A20 | 670-0702-06 | | | CKT BOARD ASSY:GRATICULE LAMPS | 80009 | 670-0702-06 |
| A21 | 670-4774-02 | | | CKT BOARD ASSY:Z AXIS | 80009 | 670-4774-02 |
| A22 | 670-8410-00 | | | CKT BOARD ASSY:HIGH VOLTAGE | 80009 | 670-8410-00 |
| A23 | 620-0283-01 | | | PWR SUPPLY ASSY: | 80009 | 620-0283-01 |
| A23 | —— —— | | | (INCLUDES A23,A24,A25 ASSEMBLIES) | | |
| A23 | 670-6259-01 | B010100 | B029999 | CKT BOARD ASSY:INVERTER | 80009 | 670-6259-01 |
| A23 | —— —— | | | (PART OF 620-0283-XX) | | |
| A23 | 670-6259-02 | B030000 | | CKT BOARD ASSY:INVERTER | 80009 | 670-6259-02 |
| A23 | —— —— | | | (PART OF 620-0283-XX) | | |
| A23A1 | 670-6259-01 | B010100 | B029999 | CKT BOARD ASSY:INVERTER | 80009 | 670-6259-01 |
| A23A1 | —— —— | | | (PART OF 620-0283-XX) | | |
| A23A1 | 670-6259-02 | B030000 | | CKT BOARD ASSY:INVERTER | 80009 | 670-6259-02 |
| A23A1 | —— —— | | | (PART OF 620-0283-XX) | | |
| A24 | 670-5959-03 | | | CKT BOARD ASSY:CONTROL RECTIFIER | 80009 | 670-5959-03 |
| A24 | —— —— | | | (PART OF 620-0283-XX) | | |
| A25 | 670-5960-03 | | | CKT BOARD ASSY:LOW VOLTAGE REGULATOR | 80009 | 670-5960-03 |
| A25 | —— —— | | | (PART OF 620-0283-XX) | | |



http://manoman.sqhill.com

| Component No. | Tektronix Part No. | Serial/Model No. Eff | Dscont | Name & Description | Mfr Code | Mfr Part Number |
|---|---|---|---|---|---|---|
| A1 | 670-4895-20 | | | CKT BOARD ASSY:FRONT PANEL | 80009 | 670-4895-20 |
| A1C1901 | 281-0773-00 | | | CAP.,FXD,CER DI:0.1UF,20%,50V | 04222 | MA201C103KAA |
| A1C1904 | 281-0812-00 | | | CAP.,FXD,CER DI:1000PF,10%,100V | 04222 | MA101C102KAA |
| A1C1906 | 281-0812-00 | | | CAP.,FXD,CER DI:1000PF,10%,100V | 04222 | MA101C102KAA |
| A1C1908 | 290-0187-00 | | | CAP.,FXD,ELCTLT:4.7UF,20%,35V | 56289 | 150D475X0035B2 |
| A1C1914 | 281-0763-00 | | | CAP.,FXD,CER DI:47PF,10%,100V | 04222 | MA101A470KAA |
| A1C1916 | 281-0812-00 | | | CAP.,FXD,CER DI:1000PF,10%,100V | 04222 | MA101C102KAA |
| A1C1918 | 281-0773-00 | | | CAP.,FXD,CER DI:0.1UF,20%,50V | 04222 | MA201C103KAA |
| A1C1920 | 281-0773-00 | | | CAP.,FXD,CER DI:0.1UF,20%,50V | 04222 | MA201C103KAA |
| A1C1921 | 281-0813-00 | | | CAP.,FXD CER DI:0.047UF,20%,50V | 96733 | R2980 |
| A1C1935 | 281-0797-00 | | | CAP.,FXD,CER DI:15PF,10%,100V | 04222 | MA106A150KAA |
| A1C1938 | 281-0812-00 | | | CAP.,FXD,CER DI:1000PF,10%,100V | 04222 | MA101C102KAA |
| A1C1950 | 281-0775-00 | | | CAP.,FXD,CER DI:0.1UF,20%,50V | 04222 | MA205E104MAA |
| A1C1952 | 281-0786-00 | | | CAP.,FXD,CER DI:150PF,10%,100V | 04222 | MA101A151KAA |
| A1C1953 | 281-0775-00 | | | CAP.,FXD,CER DI:0.1UF,20%,50V | 04222 | MA205E104MAA |
| A1C1955 | 290-0536-00 | | | CAP.,FXD,ELCTLT:10UF,20%,25V | 90201 | TDC106M025FL |
| A1C1956 | 290-0745-00 | | | CAP.,FXD,ELCTLT:22UF,+50-10%,25V | 54473 | ECE-A25V22L |
| A1C1968 | 290-0534-00 | | | CAP.,FXD,ELCTLT:1UF,20%,35V | 56289 | 196D105X0035HA1 |
| A1C1969 | 281-0773-00 | | | CAP.,FXD,CER DI:0.1UF,20%,50V | 04222 | MA201C103KAA |
| A1C1971 | 285-0913-00 | | | CAP.,FXD,PLSTC:3UF,5%,50V | 84411 | TEK34-3055R5 |
| A1C1982 | 281-0775-00 | | | CAP.,FXD,CER DI:0.1UF,20%,50V | 04222 | MA205E104MAA |
| A1C1984 | 281-0773-00 | | | CAP.,FXD,CER DI:0.1UF,20%,50V | 04222 | MA201C103KAA |
| A1C1985 | 290-0574-00 | | | CAP.,FXD,ELCTLT:47UF,10%,20V | 90201 | TDC476K020CL |
| A1C1990 | 283-0220-00 | | | CAP.,FXD,CER DI:0.01UF,20%,50V | 72982 | 8121N075X7R0103M |
| A1C1993 | 281-0812-00 | | | CAP.,FXD,CER DI:1000PF,10%,100V | 04222 | MA101C102KAA |
| A1C1994 | 281-0775-00 | | | CAP.,FXD,CER DI:0.1UF,20%,50V | 04222 | MA205E104MAA |
| A1C1995 | 290-0804-00 | | | CAP.,FXD,ELCTLT:10UF,+50-10%,25V | 55680 | ULA1E100TEA |
| A1C1996 | 290-0804-00 | | | CAP.,FXD,ELCTLT:10UF,+50-10%,25V | 55680 | ULA1E100TEA |
| A1C1997 | 290-0804-00 | | | CAP.,FXD,ELCTLT:10UF,+50-10%,25V | 55680 | ULA1E100TEA |
| A1CR1900 | 152-0141-02 | | | SEMICOND DVC,DI:SW,SI,30V,150MA,30V,DO-35 | 12969 | NDP0263 (1N4152) |
| A1CR1902 | 152-0141-02 | | | SEMICOND DVC,DI:SW,SI,30V,150MA,30V,DO-35 | 12969 | NDP0263 (1N4152) |
| A1CR1916 | 152-0322-00 | | | SEMICOND DEVICE:SILICON,15V,HOT CARRIER | 50434 | 5082-2672 |
| A1CR1918 | 152-0141-02 | | | SEMICOND DVC,DI:SW,SI,30V,150MA,30V,DO-35 | 12969 | NDP0263 (1N4152) |
| A1CR1922 | 152-0141-02 | | | SEMICOND DVC,DI:SW,SI,30V,150MA,30V,DO-35 | 12969 | NDP0263 (1N4152) |
| A1CR1923 | 152-0141-02 | | | SEMICOND DVC,DI:SW,SI,30V,150MA,30V,DO-35 | 12969 | NDP0263 (1N4152) |
| A1CR1927 | 152-0141-02 | | | SEMICOND DVC,DI:SW,SI,30V,150MA,30V,DO-35 | 12969 | NDP0263 (1N4152) |
| A1CR1928 | 152-0141-02 | | | SEMICOND DVC,DI:SW,SI,30V,150MA,30V,DO-35 | 12969 | NDP0263 (1N4152) |
| A1CR1929 | 152-0141-02 | | | SEMICOND DVC,DI:SW,SI,30V,150MA,30V,DO-35 | 12969 | NDP0263 (1N4152) |
| A1CR1946 | 152-0141-02 | | | SEMICOND DVC,DI:SW,SI,30V,150MA,30V,DO-35 | 12969 | NDP0263 (1N4152) |
| A1CR1947 | 152-0141-02 | | | SEMICOND DVC,DI:SW,SI,30V,150MA,30V,DO-35 | 12969 | NDP0263 (1N4152) |
| A1CR1948 | 152-0141-02 | | | SEMICOND DVC,DI:SW,SI,30V,150MA,30V,DO-35 | 12969 | NDP0263 (1N4152) |
| A1CR1963 | 152-0141-02 | | | SEMICOND DVC,DI:SW,SI,30V,150MA,30V,DO-35 | 12969 | NDP0263 (1N4152) |
| A1CR1971 | 152-0141-02 | | | SEMICOND DVC,DI:SW,SI,30V,150MA,30V,DO-35 | 12969 | NDP0263 (1N4152) |
| A1CR1972 | 152-0141-02 | | | SEMICOND DVC,DI:SW,SI,30V,150MA,30V,DO-35 | 12969 | NDP0263 (1N4152) |
| A1CR1974 | 152-0141-02 | | | SEMICOND DVC,DI:SW,SI,30V,150MA,30V,DO-35 | 12969 | NDP0263 (1N4152) |
| A1CR1991 | 152-0141-02 | | | SEMICOND DVC,DI:SW,SI,30V,150MA,30V,DO-35 | 12969 | NDP0263 (1N4152) |
| A1CR1992 | 152-0141-02 | | | SEMICOND DVC,DI:SW,SI,30V,150MA,30V,DO-35 | 12969 | NDP0263 (1N4152) |
| A1CR1993 | 152-0141-02 | | | SEMICOND DVC,DI:SW,SI,30V,150MA,30V,DO-35 | 12969 | NDP0263 (1N4152) |
| A1CR1994 | 152-0141-02 | | | SEMICOND DVC,DI:SW,SI,30V,150MA,30V,DO-35 | 12969 | NDP0263 (1N4152) |
| A1CR1998 | 152-0141-02 | | | SEMICOND DVC,DI:SW,SI,30V,150MA,30V,DO-35 | 12969 | NDP0263 (1N4152) |
| A1E1946 | 276-0532-00 | | | SHIELDING BEAD,: | 02114 | 56-590-65/4A6 |
| A1J1915 | 131-1003-00 | | | CONN,RCPT,ELEC:CKT BD MT,3 PRONG | 80009 | 131-1003-00 |
| A1J1924 | 131-1003-00 | | | CONN,RCPT,ELEC:CKT BD MT,3 PRONG | 80009 | 131-1003-00 |
| A1J1943 | 131-1003-00 | | | CONN,RCPT,ELEC:CKT BD MT,3 PRONG | 80009 | 131-1003-00 |
| A1J1992 | 131-1003-00 | | | CONN,RCPT,ELEC:CKT BD MT,3 PRONG | 80009 | 131-1003-00 |



http://manoman.sqhill.com

| Component No. | Tektronix Part No. | Serial/Model No. Eff | Dscont | Name & Description | Mfr Code | Mfr Part Number |
|---|---|---|---|---|---|---|
| A1L1995 | 108-0245-00 | | | COIL,RF:3.9UH | 76493 | B6310-1 |
| A1L1996 | 108-0245-00 | | | COIL,RF:3.9UH | 76493 | B6310-1 |
| A1L1997 | 108-0245-00 | | | COIL,RF:3.9UH | 76493 | B6310-1 |
| A1P1900 | 131-0589-00 | B010100 | B030299 | TERMINAL,PIN:0.46 L X 0.025 SQ | 22526 | 48283-029 |
| A1P1900 | — — | | | (QUANTITY OF 8) | | |
| A1P1900 | — — | | | (REFER TO MAINT SECTION FOR SQ PIN REPL) | | |
| A1P1904 | 131-0608-00 | B010100 | B030299 | TERMINAL,PIN:0.365 L X 0.025 PH BRZ GOLD | 22526 | 48283-036 |
| A1P1904 | — — | | | (QUANTITY OF 8) | | |
| A1P1904 | — — | | | (REFER TO MAINT SECTION FOR SQ PIN REPL) | | |
| A1P1909 | 131-0608-00 | B010100 | B030299 | TERMINAL,PIN:0.365 L X 0.025 PH BRZ GOLD | 22526 | 48283-036 |
| A1P1909 | — — | | | (QUANTITY OF 6) | | |
| A1P1909 | — — | | | (REFER TO MAINT SECTION FOR SQ PIN REPL) | | |
| A1P1910 | 131-0608-00 | B010100 | B030299 | TERMINAL,PIN:0.365 L X 0.025 PH BRZ GOLD | 22526 | 48283-036 |
| A1P1910 | — — | | | (QUANTITY OF 4) | | |
| A1P1910 | — — | | | (REFER TO MAINT SECTION FOR SQ PIN REPL) | | |
| A1P1917 | 131-0608-00 | B010100 | B030299 | TERMINAL,PIN:0.365 L X 0.025 PH BRZ GOLD | 22526 | 48283-036 |
| A1P1917 | — — | | | (QUANTITY OF 5) | | |
| A1P1917 | — — | | | (REFER TO MAINT SECTION FOR SQ PIN REPL) | | |
| A1Q1908 | 151-0508-00 | | | TRANSISTOR:UJT,SI,2N6027,TO-98 | 03508 | X13T520 |
| A1Q1910 | 151-0341-00 | | | TRANSISTOR:NPN,SI,TO-106 | 04713 | SPS6919 |
| A1Q1916 | 151-0192-00 | | | TRANSISTOR:SELECTED | 04713 | SPS8801 |
| A1Q1928 | 151-0271-00 | | | TRANSISTOR:SILICON,PNP | 04713 | SPS8236 |
| A1Q1934 | 151-0223-00 | | | TRANSISTOR:NPN,SI,TO-92 | 04713 | SPS8026 |
| A1Q1938 | 151-0223-00 | | | TRANSISTOR:NPN,SI,TO-92 | 04713 | SPS8026 |
| A1Q1942 | 151-0301-00 | | | TRANSISTOR:SILICON,PNP | 27014 | 2N2907A |
| A1Q1943 | 151-0198-00 | | | TRANSISTOR:SELECTED | 04713 | SPS8802-1 |
| A1Q1946 | 151-0198-00 | | | TRANSISTOR:SELECTED | 04713 | SPS8802-1 |
| A1Q1956 | 151-0302-00 | | | TRANSISTOR:SILICON,NPN | 07263 | S038487 |
| A1Q1970 | 151-0302-00 | | | TRANSISTOR:SILICON,NPN | 07263 | S038487 |
| A1Q1974 | 151-1021-00 | | | TRANSISTOR:SILICON,JFE | 17856 | FN5055 |
| A1Q1978 | 151-0192-00 | | | TRANSISTOR:SELECTED | 04713 | SPS8801 |
| A1Q1980 | 151-0192-00 | | | TRANSISTOR:SELECTED | 04713 | SPS8801 |
| A1Q1982 | 151-0301-00 | | | TRANSISTOR:SILICON,PNP | 27014 | 2N2907A |
| A1Q1994 | 151-0301-00 | | | TRANSISTOR:SILICON,PNP | 27014 | 2N2907A |
| A1Q1995 | 151-0192-00 | | | TRANSISTOR:SELECTED | 04713 | SPS8801 |
| A1Q1998 | 151-0188-00 | | | TRANSISTOR:PNP,SI,TO-92 | 04713 | SPS6868 |
| A1Q1999 | 151-0192-00 | | | TRANSISTOR:SELECTED | 04713 | SPS8801 |
| A1R301 | 303-0301-00 | | | RES.,FXD,CMPSN:300 OHM,5%,1W | 01121 | GB3015 |
| A1R1900 | 311-1587-00 | | | RES.,VAR,NONWIR:10K OHM,20%,1W | 01121 | 12M435 |
| A1R1901 | 315-0106-00 | | | RES.,FXD,CMPSN:10M OHM,5%,0.25W | 01121 | CB1065 |
| A1R1902 | 311-1319-00 | | | RES.,VAR,NONWIR:10K OHM,10%,0.75W | 73138 | 89-126-1 |
| A1R1903 | 315-0101-00 | | | RES.,FXD,CMPSN:100 OHM,5%,0.25W | 57668 | NTR25J-E 100E |
| A1R1905 | 315-0103-00 | | | RES.,FXD,CMPSN:10K OHM,5%,0.25W | 57668 | NTR25J-E10K0 |
| A1R1906 | 315-0103-00 | | | RES.,FXD,CMPSN:10K OHM,5%,0.25W | 57668 | NTR25J-E10K0 |
| A1R1908 | 315-0512-00 | | | RES.,FXD,CMPSN:5.1K OHM,5%,0.25W | 57668 | NTR25J-E05K1 |
| A1R1909 | 315-0244-00 | | | RES.,FXD,CMPSN:240K OHM,5%,0.25W | 57668 | NTR25J-E 240K |
| A1R1910 | 315-0104-00 | | | RES.,FXD,CMPSN:100K OHM,5%,0.25W | 57668 | NTR25J-E100K |
| A1R1911 | 321-0143-00 | | | RES.,FXD,FILM:301 OHM,1%,0.125W | 91637 | CMF55116G301R0F |
| A1R1914 | 315-0471-00 | | | RES.,FXD,CMPSN:470 OHM,5%,0.25W | 57668 | NTR25J-E470E |
| A1R1915 | 315-0104-00 | | | RES.,FXD,CMPSN:100K OHM,5%,0.25W | 57668 | NTR25J-E100K |
| A1R1916 | 315-0512-00 | | | RES.,FXD,CMPSN:5.1K OHM,5%,0.25W | 57668 | NTR25J-E05K1 |
| A1R1917 | 315-0153-00 | | | RES.,FXD,CMPSN:15K OHM,5%,0.25W | 57668 | NTR25J-E 15K |
| A1R1918 | 315-0106-00 | | | RES.,FXD,CMPSN:10M OHM,5%,0.25W | 01121 | CB1065 |
| A1R1919 | 315-0105-00 | | | RES.,FXD,CMPSN:1M OHM,5%,0.25W | 57668 | NTR255-E 1M |



http://manoman.sqhill.com

| Component No. | Tektronix Part No. | Serial/Model No. Eff | Dscont | Name & Description | Mfr Code | Mfr Part Number |
|---|---|---|---|---|---|---|
| A1R1920 | 315-0101-00 | | | RES.,FXD,CMPSN:100 OHM,5%,0.25W | 57668 | NTR25J-E 100E |
| A1R1921 | 315-0105-00 | | | RES.,FXD,CMPSN:1M OHM,5%,0.25W | 57668 | NTR255-E 1M |
| A1R1922 | 315-0622-00 | | | RES.,FXD,CMPSN:6.2K OHM,5%,0.25W | 57668 | NTR25J-E 6K2 |
| A1R1923 | 311-1339-00 | | | RES.,VAR,NONWIR:5K OHM,10%,0.50W | 73138 | 89-131-1 |
| A1R1924 | 311-1588-00 | | | RES.,VAR,NONWIR:5K OHM,20%,1W | 01121 | 20M718 |
| A1R1925 | 315-0202-00 | | | RES.,FXD,CMPSN:2K OHM,5%,0.25W | 57668 | NTR25J-E02K0 |
| A1R1926 | 315-0101-00 | | | RES.,FXD,CMPSN:100 OHM,5%,0.25W | 57668 | NTR25J-E 100E |
| A1R1927 | 321-0226-00 | | | RES.,FXD,FILM:2.21K OHM,1%,0.125W | 91637 | MFF1816G22100F |
| A1R1928 | 321-0180-00 | | | RES.,FXD,FILM:732 OHM,1%,0.125W | 91637 | CMF55116G732R0F |
| A1R1929 | 321-0190-00 | | | RES.,FXD,FILM:931 OHM,1%,0.125W | 91637 | MFF1816G931R0F |
| A1R1930 | 315-0431-00 | | | RES.,FXD,CMPSN:430 OHM,5%,0.25W | 57668 | NTR25J-E 430E |
| A1R1932 | 323-0189-00 | | | RES.,FXD,FILM:909 OHM,1%,0.50W | 24546 | NA65 9090F |
| A1R1933 | 315-0101-00 | | | RES.,FXD,CMPSN:100 OHM,5%,0.25W | 57668 | NTR25J-E 100E |
| A1R1934 | 315-0301-00 | | | RES.,FXD,CMPSN:300 OHM,5%,0.25W | 57668 | NTR25J-E300E |
| A1R1935 | 315-0473-00 | | | RES.,FXD,CMPSN:47K OHM,5%,0.25W | 57668 | NTR25J-E47K0 |
| A1R1936 | 315-0101-00 | | | RES.,FXD,CMPSN:100 OHM,5%,0.25W | 57668 | NTR25J-E 100E |
| A1R1937 | 315-0123-00 | | | RES.,FXD,CMPSN:12K OHM,5%,0.25W | 57668 | NTR25J-E12K0 |
| A1R1938 | 315-0331-00 | | | RES.,FXD,CMPSN:330 OHM,5%,0.25W | 57668 | NTR25J-E330E |
| A1R1940 | 315-0510-00 | | | RES.,FXD,CMPSN:51 OHM,5%,0.25W | 57668 | NTR25J-E51E0 |
| A1R1942 | 315-0204-00 | | | RES.,FXD,CMPSN:200K OHM,5%,0.25W | 57668 | NTR25J-E 200K |
| A1R1943 | 321-0097-00 | | | RES.,FXD,FILM:100 OHM,1%,0.125W | 91637 | CMF55116G100R0F |
| A1R1944 | 321-0262-00 | | | RES.,FXD,FILM:5.23K OHM,1%,0.125W | 91637 | MFF1816G52300F |
| A1R1945 | 301-0102-00 | | | RES.,FXD,CMPSN:1K OHM,5%,0.50W | 01121 | EB1025 |
| A1R1946 | 321-0097-00 | | | RES.,FXD,FILM:100 OHM,1%,0.125W | 91637 | CMF55116G100R0F |
| A1R1948 | 321-0190-00 | | | RES.,FXD,FILM:931 OHM,1%,0.125W | 91637 | MFF1816G931R0F |
| A1R1950 | 315-0393-00 | | | RES.,FXD,CMPSN:39K OHM,5%,0.25W | 57668 | NTR25J-E39K0 |
| A1R1951 | 321-0481-00 | | | RES.,FXD,FILM:1M OHM,1%,0.125W | 91637 | CMF55116G10003F |
| A1R1952 | 321-0300-00 | | | RES.,FXD,FILM:13K OHM,1%,0.125W | 91637 | MFF1816G13001F |
| A1R1953 | 315-0104-00 | | | RES.,FXD,CMPSN:100K OHM,5%,0.25W | 57668 | NTR25J-E100K |
| A1R1954 | 315-0104-00 | | | RES.,FXD,CMPSN:100K OHM,5%,0.25W | 57668 | NTR25J-E100K |
| A1R1955 | 315-0103-00 | | | RES.,FXD,CMPSN:10K OHM,5%,0.25W | 57668 | NTR25J-E10K0 |
| A1R1956 | 315-0223-00 | | | RES.,FXD,CMPSN:22K OHM,5%,0.25W | 57668 | NTR25J-E 22K |
| A1R1957 | 315-0821-00 | | | RES.,FXD,CMPSN:820 OHM,5%,0.25W | 57668 | NTR25J-E 820E |
| A1R1958 | 315-0335-00 | | | RES.,FXD,CMPSN:3.3M OHM,5%,0.25W | 01121 | CB3355 |
| A1R1959 | 321-0217-00 | | | RES.,FXD,FILM:1.78K OHM,1%,0.125W | 91637 | CMF55116G17800F |
| A1R1960 | 321-0039-00 | | | RES.,FXD,FILM:24.9 OHM,1%,0.125W | 91637 | CMF55116G24R90F |
| A1R1961 | 315-0101-00 | | | RES.,FXD,CMPSN:100 OHM,5%,0.25W | 57668 | NTR25J-E 100E |
| A1R1962 | 315-0514-00 | | | RES.,FXD,CMPSN:510K OHM,5%,0.25W | 19701 | 5043CX510K0J |
| A1R1963 | 321-0283-00 | | | RES.,FXD,FILM:8.66K OHM,1%,0.125W | 91637 | CMF55116G86600F |
| A1R1964 | 321-0205-00 | | | RES.,FXD,FILM:1.33K OHM,1%,0.125W | 91637 | CMF55116G13300F |
| A1R1965 | 321-0260-00 | | | RES.,FXD,FILM:4.99K OHM,1%,0.125W | 91637 | MFF1816G49900F |
| A1R1966 | 315-0103-00 | | | RES.,FXD,CMPSN:10K OHM,5%,0.25W | 57668 | NTR25J-E10K0 |
| A1R1967 | 315-0473-00 | | | RES.,FXD,CMPSN:47K OHM,5%,0.25W | 57668 | NTR25J-E47K0 |
| A1R1968 | 315-0104-00 | | | RES.,FXD,CMPSN:100K OHM,5%,0.25W | 57668 | NTR25J-E100K |
| A1R1969 | 315-0152-00 | | | RES.,FXD,CMPSN:1.5K OHM,5%,0.25W | 57668 | NTR25J-E01K5 |
| A1R1970 | 315-0152-00 | | | RES.,FXD,CMPSN:1.5K OHM,5%,0.25W | 57668 | NTR25J-E01K5 |
| A1R1971 | 315-0625-00 | | | RES.,FXD,CMPSN:6.2M OHM,5%,0.25W | 01121 | CB6255 |
| A1R1972 | 315-0103-00 | | | RES.,FXD,CMPSN:10K OHM,5%,0.25W | 57668 | NTR25J-E10K0 |
| A1R1973 | 315-0103-00 | | | RES.,FXD,CMPSN:10K OHM,5%,0.25W | 57668 | NTR25J-E10K0 |
| A1R1974 | 315-0104-00 | | | RES.,FXD,CMPSN:100K OHM,5%,0.25W | 57668 | NTR25J-E100K |
| A1R1975 | 315-0332-00 | | | RES.,FXD,CMPSN:3.3K OHM,5%,0.25W | 57668 | NTR25J-E03K3 |
| A1R1976 | 315-0104-00 | | | RES.,FXD,CMPSN:100K OHM,5%,0.25W | 57668 | NTR25J-E100K |
| A1R1977 | 315-0433-00 | | | RES.,FXD,CMPSN:43K OHM,5%,0.25W | 57668 | NTR25J-E043K |
| A1R1979 | 321-0296-00 | | | RES.,FXD,FILM:11.8K OHM,1%,0.125W | 91637 | MFF1816G11801F |



http://manoman.sqhill.com

| Component No. | Tektronix Part No. | Serial/Model No. Eff | Dscont | Name & Description | Mfr Code | Mfr Part Number |
|---|---|---|---|---|---|---|
| A1R1980 | 315-0101-00 | | | RES.,FXD,CMPSN:100 OHM,5%,0.25W | 57668 | NTR25J-E 100E |
| A1R1981 | 315-0152-00 | | | RES.,FXD,CMPSN:1.5K OHM,5%,0.25W | 57668 | NTR25J-E01K5 |
| A1R1982 | 315-0152-00 | | | RES.,FXD,CMPSN:1.5K OHM,5%,0.25W | 57668 | NTR25J-E01K5 |
| A1R1983 | 321-0243-00 | | | RES.,FXD,FILM:3.32K OHM,1%,0.125W | 91637 | MFF1816G33200F |
| A1R1985 | 315-0154-00 | | | RES.,FXD,CMPSN:150K OHM,5%,0.25W | 57668 | NTR25J-E150K |
| A1R1986 | 315-0101-00 | | | RES.,FXD,CMPSN:100 OHM,5%,0.25W | 57668 | NTR25J-E 100E |
| A1R1987 | 315-0471-00 | | | RES.,FXD,CMPSN:470 OHM,5%,0.25W | 57668 | NTR25J-E470E |
| A1R1988 | 315-0152-00 | | | RES.,FXD,CMPSN:1.5K OHM,5%,0.25W | 57668 | NTR25J-E01K5 |
| A1R1989 | 315-0103-00 | | | RES.,FXD,CMPSN:10K OHM,5%,0.25W | 57668 | NTR25J-E10K0 |
| A1R1990 | 315-0101-00 | | | RES.,FXD,CMPSN:100 OHM,5%,0.25W | 57668 | NTR25J-E 100E |
| A1R1991 | 315-0103-00 | | | RES.,FXD,CMPSN:10K OHM,5%,0.25W | 57668 | NTR25J-E10K0 |
| A1R1992 | 315-0152-00 | | | RES.,FXD,CMPSN:1.5K OHM,5%,0.25W | 57668 | NTR25J-E01K5 |
| A1R1993 | 315-0104-00 | | | RES.,FXD,CMPSN:100K OHM,5%,0.25W | 57668 | NTR25J-E100K |
| A1R1995 | 315-0103-00 | | | RES.,FXD,CMPSN:10K OHM,5%,0.25W | 57668 | NTR25J-E10K0 |
| A1R1996 | 315-0104-00 | | | RES.,FXD,CMPSN:100K OHM,5%,0.25W | 57668 | NTR25J-E100K |
| A1R1997 | 315-0104-00 | | | RES.,FXD,CMPSN:100K OHM,5%,0.25W | 57668 | NTR25J-E100K |
| A1R1998 | 315-0202-00 | | | RES.,FXD,CMPSN:2K OHM,5%,0.25W | 57668 | NTR25J-E02K0 |
| A1R1999 | 315-0101-00 | | | RES.,FXD,CMPSN:100 OHM,5%,0.25W | 57668 | NTR25J-E 100E |
| A1S1905 | 260-1380-00 | | | SWITCH,PUSH:2 STATION,NON-SHORT,INTLK | 71590 | 2KBM020000-619 |
| A1S1910 | — — | | | (PART OF S1905) | | |
| A1S1915 | 260-1380-00 | | | SWITCH,PUSH:2 STATION,NON-SHORT,INTLK | 71590 | 2KBM020000-619 |
| A1S1920 | — — | | | (PART OF S1915) | | |
| A1TP1908 | 214-0579-00 | B010100 | B030249 | TERM,TEST POINT:BRS CD PL | 80009 | 214-0579-00 |
| A1TP1925 | 214-0579-00 | B010100 | B030249 | TERM,TEST POINT:BRS CD PL | 80009 | 214-0579-00 |
| A1TP1952 | 214-0579-00 | B010100 | B030249 | TERM,TEST POINT:BRS CD PL | 80009 | 214-0579-00 |
| A1TP1956 | 214-0579-00 | B010100 | B030249 | TERM,TEST POINT:BRS CD PL | 80009 | 214-0579-00 |
| A1TP1958 | 214-0579-00 | B010100 | B030249 | TERM,TEST POINT:BRS CD PL | 80009 | 214-0579-00 |
| A1TP1962 | 214-0579-00 | B010100 | B030249 | TERM,TEST POINT:BRS CD PL | 80009 | 214-0579-00 |
| A1TP1968 | 214-0579-00 | B010100 | B030249 | TERM,TEST POINT:BRS CD PL | 80009 | 214-0579-00 |
| A1TP1970 | 214-0579-00 | B010100 | B030249 | TERM,TEST POINT:BRS CD PL | 80009 | 214-0579-00 |
| A1TP1986 | 214-0579-00 | B010100 | B030249 | TERM,TEST POINT:BRS CD PL | 80009 | 214-0579-00 |
| A1TP1991 | 214-0579-00 | B010100 | B030249 | TERM,TEST POINT:BRS CD PL | 80009 | 214-0579-00 |
| A1TP1992 | 214-0579-00 | B010100 | B030249 | TERM,TEST POINT:BRS CD PL | 80009 | 214-0579-00 |
| A1U1952 | 156-0686-00 | | | MICROCIRCUIT,LI:OPNL AMPL,HIGH IMPEDANCE | 02735 | CA3130S |
| A1U1958 | 156-0158-00 | | | MICROCIRCUIT,LI:DUAL OPERATIONAL AMPLIFIER | 18324 | MC1458N |
| A1U1968 | 156-0402-00 | | | MICROCIRCUIT,LI:TIMER | 27014 | LM555CN |
| A1U1970 | 156-1149-00 | | | MICROCIRCUIT,LI:OPERATIONAL AMP,JFET INPUT | 27014 | LF351N/GLEA134 |
| A1U1986 | 156-0402-00 | | | MICROCIRCUIT,LI:TIMER | 27014 | LM555CN |
| A1U1992 | 156-0038-02 | | | MICROCIRCUIT,DI:J-K MASTER SLAVE FF,SCRN | 01295 | SN7472(NP3/JP4) |
| A1VR1910 | 152-0280-00 | | | SEMICOND DEVICE:ZENER,0.4W,6.2V,5% | 80009 | 152-0280-00 |



http://manoman.sqhill.com

| Component No. | Tektronix Part No. | Serial/Model No. Eff | Dscont | Name & Description | Mfr Code | Mfr Part Number |
|---|---|---|---|---|---|---|
| A3 | 670-4778-01 | | | CKT BOARD ASSY:TRIGGER LIGHT | 80009 | 670-4778-01 |
| A3DS342 | 150-0048-01 | | | LAMP,INCAND:5V,0.06A,#683,AGED & SEL | S3774 | OL683AS15 TPL |
| A3DS345 | 150-0048-01 | | | LAMP,INCAND:5V,0.06A,#683,AGED & SEL | S3774 | OL683AS15 TPL |
| A3DS346 | 150-0048-01 | | | LAMP,INCAND:5V,0.06A,#683,AGED & SEL | S3774 | OL683AS15 TPL |
| A3P346 | 131-0608-00 | | | TERMINAL,PIN:0.365 L X 0.025 PH BRZ GOLD | 22526 | 48283-036 |
| A3P346 | —— —— | | | (QUANTITY OF 4) | | |
| A5 | 670-8411-00 | | | CKT BOARD ASSY:MODE SWITCH | 80009 | 670-8411-00 |
| A5C324 | 281-0773-00 | | | CAP.,FXD,CER DI:0.1UF,20%,50V | 04222 | MA201C103KAA |
| A5C325 | 281-0763-00 | | | CAP.,FXD,CER DI:47PF,10%,100V | 04222 | MA101A470KAA |
| A5C326 | 281-0773-00 | | | CAP.,FXD,CER DI:0.1UF,20%,50V | 04222 | MA201C103KAA |
| A5C376 | 285-1130-00 | | | CAP.,FXD,PLSTC:0.22UF,1%,100V | 50558 | MH12D224F |
| A5C384 | 281-0763-00 | | | CAP.,FXD,CER DI:47PF,10%,100V | 04222 | MA101A470KAA |
| A5C386 | 281-0763-00 | | | CAP.,FXD,CER DI:47PF,10%,100V | 04222 | MA101A470KAA |
| A5CR319 | 152-0141-02 | | | SEMICOND DVC,DI:SW,SI,30V,150MA,30V,DO-35 | 12969 | NDP0263 (1N4152) |
| A5CR362 | 152-0141-02 | | | SEMICOND DVC,DI:SW,SI,30V,150MA,30V,DO-35 | 12969 | NDP0263 (1N4152) |
| A5CR386 | 152-0141-02 | | | SEMICOND DVC,DI:SW,SI,30V,150MA,30V,DO-35 | 12969 | NDP0263 (1N4152) |
| A5J392 | 131-1003-00 | | | CONN,RCPT,ELEC:CKT BD MT,3 PRONG | 80009 | 131-1003-00 |
| A5P303 | —— —— | | | (REFER TO MAINT SECTION FOR SQ PIN REPL) | | |
| A5P304 | —— —— | | | (REFER TO MAINT SECTION FOR SQ PIN REPL) | | |
| A5P306 | —— —— | | | (REFER TO MAINT SECTION FOR SQ PIN REPL) | | |
| A5P308 | —— —— | | | (REFER TO MAINT SECTION FOR SQ PIN REPL) | | |
| A5P309 | —— —— | | | (REFER TO MAINT SECTION FOR SQ PIN REPL) | | |
| A5P310 | —— —— | | | (REFER TO MAINT SECTION FOR SQ PIN REPL) | | |
| A5P2006 | —— —— | | | (REFER TO MAINT SECTION FOR SQ PIN REPL) | | |
| A5Q356 | 151-0190-00 | | | TRANSISTOR:NPN,SI,TO-92 | 04713 | SPS7969 |
| A5Q357 | 151-0190-00 | | | TRANSISTOR:NPN,SI,TO-92 | 04713 | SPS7969 |
| A5Q362 | 151-0190-00 | | | TRANSISTOR:NPN,SI,TO-92 | 04713 | SPS7969 |
| A5Q366 | 151-0190-00 | | | TRANSISTOR:NPN,SI,TO-92 | 04713 | SPS7969 |
| A5Q376 | 151-0192-00 | | | TRANSISTOR:SELECTED | 04713 | SPS8801 |
| A5Q382 | 151-0192-00 | | | TRANSISTOR:SELECTED | 04713 | SPS8801 |
| A5Q384 | 151-0188-00 | | | TRANSISTOR:PNP,SI,TO-92 | 04713 | SPS6868 |
| A5R309 | 311-1372-01 | | | RES.,VAR,NONWIR:100K OHM,20%,1W | 01121 | 73U1G040L104M |
| A5R310 | 311-1972-00 | | | RES.,VAR,NONWIR:PNL,2K OHM,10%,2.0 W | 01121 | 70N1G100L202W |
| A5R313 | 311-1973-00 | | | RES.,VAR,NONWIR:PNL,2.5M OHM,20%,0.75W | 01121 | 73M1G040L255M |
| A5R316 | 311-1375-00 | | | RES.,VAR,NONWIR:PNL,10K OHM,1W | 01121 | 73M1G040L103M |
| A5R317 | 315-0622-00 | | | RES.,FXD,CMPSN:6.2K OHM,5%,0.25W | 57668 | NTR25J-E 6K2 |
| A5R318 | 315-0303-00 | | | RES.,FXD,CMPSN:30K OHM,5%,0.25W | 57668 | NTR25J-E 30K |
| A5R319 | 315-0102-00 | | | RES.,FXD,CMPSN:1K OHM,5%,0.25W | 57668 | NTR25JE01K0 |
| A5R351 | 315-0102-00 | | | RES.,FXD,CMPSN:1K OHM,5%,0.25W | 57668 | NTR25JE01K0 |
| A5R352 | 315-0102-00 | | | RES.,FXD,CMPSN:1K OHM,5%,0.25W | 57668 | NTR25JE01K0 |
| A5R353 | 315-0102-00 | | | RES.,FXD,CMPSN:1K OHM,5%,0.25W | 57668 | NTR25JE01K0 |
| A5R354 | 315-0102-00 | | | RES.,FXD,CMPSN:1K OHM,5%,0.25W | 57668 | NTR25JE01K0 |
| A5R355 | 315-0202-00 | | | RES.,FXD,CMPSN:2K OHM,5%,0.25W | 57668 | NTR25J-E02K0 |
| A5R356 | 315-0512-00 | | | RES.,FXD,CMPSN:5.1K OHM,5%,0.25W | 57668 | NTR25J-E05K1 |
| A5R357 | 315-0512-00 | | | RES.,FXD,CMPSN:5.1K OHM,5%,0.25W | 57668 | NTR25J-E05K1 |
| A5R358 | 315-0242-00 | | | RES.,FXD,CMPSN:2.4K OHM,5%,0.25W | 57668 | NTR25J-E02K4 |
| A5R359 | 315-0202-00 | | | RES.,FXD,CMPSN:2K OHM,5%,0.25W | 57668 | NTR25J-E02K0 |
| A5R361 | 307-0109-00 | | | RES.,FXD,CMPSN:8.2 OHM,5%,0.25W | 01121 | CB82G5 |
| A5R362 | 315-0202-00 | | | RES.,FXD,CMPSN:2K OHM,5%,0.25W | 57668 | NTR25J-E02K0 |
| A5R363 | 315-0162-00 | | | RES.,FXD,CMPSN:1.6K OHM,5%,0.25W | 57668 | NTR25J-E 1K6 |



http://manoman.sqhill.com

| Component No. | Tektronix Part No. | Serial/Model No. Eff | Dscont | Name & Description | Mfr Code | Mfr Part Number |
|---|---|---|---|---|---|---|
| A5R365 | 307-0109-00 | | | RES.,FXD,CMPSN:8.2 OHM,5%,0.25W | 01121 | CB82G5 |
| A5R366 | 315-0202-00 | | | RES.,FXD,CMPSN:2K OHM,5%,0.25W | 57668 | NTR25J-E02K0 |
| A5R367 | 307-0109-00 | | | RES.,FXD,CMPSN:8.2 OHM,5%,0.25W | 01121 | CB82G5 |
| A5R368 | 315-0102-00 | | | RES.,FXD,CMPSN:1K OHM,5%,0.25W | 57668 | NTR25JE01K0 |
| A5R369 | 315-0102-00 | | | RES.,FXD,CMPSN:1K OHM,5%,0.25W | 57668 | NTR25JE01K0 |
| A5R370 | 315-0202-00 | | | RES.,FXD,CMPSN:2K OHM,5%,0.25W | 57668 | NTR25J-E02K0 |
| A5R371 | 315-0202-00 | | | RES.,FXD,CMPSN:2K OHM,5%,0.25W | 57668 | NTR25J-E02K0 |
| A5R372 | 315-0823-00 | | | RES.,FXD,CMPSN:82K OHM,5%,0.25W | 57668 | NTR25J-E82K |
| A5R373 | 321-0258-00 | | | RES.,FXD,FILM:4.75K OHM,1%,0.125W | 91637 | MFF1816G47500F |
| A5R374 | 321-1216-03 | | | RES.,FXD,FILM:1.76K OHM,0.25%,0.125W | 91637 | MFF1816D17600C |
| A5R375 | 311-1566-00 | | | RES.,VAR,NONWIR:200 OHM,20%,0.50W | 73138 | 91-88-0 |
| A5R376 | 321-0321-00 | | | RES.,FXD,FILM:21.5K OHM,1%,0.125W | 91637 | MFF1816G21501F |
| A5R380 | 315-0362-00 | | | RES.,FXD,CMPSN:3.6K OHM,5%,0.25W | 57668 | NTR25J-E 3K6 |
| A5R381 | 321-0321-00 | | | RES.,FXD,FILM:21.5K OHM,1%,0.125W | 91637 | MFF1816G21501F |
| A5R382 | 315-0223-00 | | | RES.,FXD,CMPSN:22K OHM,5%,0.25W | 57668 | NTR25J-E 22K |
| A5R383 | 321-0166-00 | | | RES.,FXD,FILM:523 OHM,1%,0.125W | 91637 | CMF55116G523R0F |
| A5R384 | 321-0816-00 | | | RES.,FXD,FILM:5K OHM,1%,0.125W | 24546 | NA55D5001F |
| A5R385 | 311-1225-00 | | | RES.,VAR,NONWIR:1K OHM,20%,0.50W | 32997 | 3386F-T04-102 |
| A5R386 | 315-0512-00 | | | RES.,FXD,CMPSN:5.1K OHM,5%,0.25W | 57668 | NTR25J-E05K1 |
| A5R387 | 321-1611-07 | | | RES.,FXD,FILM:550 OHM,0.1%,0.125W | 91637 | MFF1816C550R0B |
| A5R391 | 321-0001-01 | | | RES.,FXD,FILM:10 OHM,0.5%,0.125W | 91637 | MFF1816G10R00D |
| A5R392 | 321-1612-07 | | | RES.,FXD,FILM:4.455K OHM,0.1%,0.125W | 24546 | NE55 4.455 K B |
| A5R393 | 321-1611-07 | | | RES.,FXD,FILM:550 OHM,0.1%,0.125W | 91637 | MFF1816C550R0B |
| A5R394 | 321-1612-07 | | | RES.,FXD,FILM:4.455K OHM,0.1%,0.125W | 24546 | NE55 4.455 K B |
| A5R395 | 321-1611-07 | | | RES.,FXD,FILM:550 OHM,0.1%,0.125W | 91637 | MFF1816C550R0B |
| A5R396 | 321-1612-07 | | | RES.,FXD,FILM:4.455K OHM,0.1%,0.125W | 24546 | NE55 4.455 K B |
| A5R397 | 321-0813-07 | | | RES.,FXD,FILM:495 OHM,0.1%,0.125W | 91637 | MFF1816C495R0B |
| A5S309 | 260-1208-00 | | | SWITCH,PUSH:DPDT,28VDC,PUSH-PUSH | 31918 | ORDER BY DESCR |
| A5S325 | 263-0022-02 | | | SWITCH PB ASSY:5 LATCH,7.5 MM10 CONTACTS | 80009 | 263-0022-02 |
| A5S365 | 263-0013-10 | | | SWITCH PB ASSY:3 LATCH,10 MM,W/3 CONTACTS | 80009 | 263-0013-10 |
| A5S395 | 263-0013-11 | | | SWITCH PB ASSY:3-LATCH,10 MM,5 CONTACTS | 80009 | 263-0013-11 |
| A5U364 | 156-0384-02 | | | MICROCIRCUIT,DI:QUAD 2-INP NAND GATE | 01295 | SN74LS03 |
| A5U366 | 156-0722-02 | | | MICROCIRCUIT,DI:TPL 3-INPUT POS NAND GATE | 04713 | SN74LS12NDS |



http://manoman.sqhill.com

| Component No. | Tektronix Part No. | Serial/Model No. Eff | Dscont | Name & Description | Mfr Code | Mfr Part Number |
|---|---|---|---|---|---|---|
| A6 | 670-8412-00 | | | CKT BOARD ASSY:MAIN INTERFACE | 80009 | 670-8412-00 |
| A6C5 | 290-0747-00 | | | CAP.,FXD,ELCTLT:100UF,+50-10%,25V | 56289 | 500D148 |
| A6C6 | 290-0747-00 | | | CAP.,FXD,ELCTLT:100UF,+50-10%,25V | 56289 | 500D148 |
| A6C7 | 290-0969-00 | | | CAP.,FXD,ELCTLT:22UF,+50-10%,100V | 55680 | TLB2A220TCAANA |
| A6C8 | 290-0969-00 | | | CAP.,FXD,ELCTLT:22UF,+50-10%,100V | 55680 | TLB2A220TCAANA |
| A6C9 | 290-0747-00 | | | CAP.,FXD,ELCTLT:100UF,+50-10%,25V | 56289 | 500D148 |
| A6C11 | 285-0674-00 | | | CAP.,FXD,PLSTC:0.01UF,10%,100V | 56289 | 192P10392 |
| A6C12 | 285-0674-00 | | | CAP.,FXD,PLSTC:0.01UF,10%,100V | 56289 | 192P10392 |
| A6C13 | 281-0773-00 | | | CAP.,FXD,CER DI:0.1UF,20%,50V | 04222 | MA201C103KAA |
| A6C15 | 281-0815-00 | | | CAP.,FXD,CER DI:0.027UF,20%,50V | 72982 | 8005D9AABW5R273M |
| A6C19 | 281-0773-00 | | | CAP.,FXD,CER DI:0.1UF,20%,50V | 04222 | MA201C103KAA |
| A6C85 | 281-0775-00 | | | CAP.,FXD,CER DI:0.1UF,20%,50V | 04222 | MA205E104MAA |
| A6C87 | 281-0775-00 | | | CAP.,FXD,CER DI:0.1UF,20%,50V | 04222 | MA205E104MAA |
| A6CR3 | 152-0141-02 | | | SEMICOND DVC,DI:SW,SI,30V,150MA,30V,DO-35 | 12969 | NDP0263 (1N4152) |
| A6CR32 | 152-0333-00 | | | SEMICOND DVC DI:SW,SI,55V,200MA,D0-35 | 03508 | DJ2011 |
| A6CR33 | 152-0333-00 | | | SEMICOND DVC DI:SW,SI,55V,200MA,D0-35 | 03508 | DJ2011 |
| A6CR34 | 152-0333-00 | | | SEMICOND DVC DI:SW,SI,55V,200MA,D0-35 | 03508 | DJ2011 |
| A6CR35 | 152-0333-00 | | | SEMICOND DVC DI:SW,SI,55V,200MA,D0-35 | 03508 | DJ2011 |
| A6CR36 | 152-0333-00 | | | SEMICOND DVC DI:SW,SI,55V,200MA,D0-35 | 03508 | DJ2011 |
| A6CR37 | 152-0333-00 | | | SEMICOND DVC DI:SW,SI,55V,200MA,D0-35 | 03508 | DJ2011 |
| A6CR38 | 152-0333-00 | | | SEMICOND DVC DI:SW,SI,55V,200MA,D0-35 | 03508 | DJ2011 |
| A6CR39 | 152-0333-00 | | | SEMICOND DVC DI:SW,SI,55V,200MA,D0-35 | 03508 | DJ2011 |
| A6CR42 | 152-0333-00 | | | SEMICOND DVC DI:SW,SI,55V,200MA,D0-35 | 03508 | DJ2011 |
| A6CR43 | 152-0333-00 | | | SEMICOND DVC DI:SW,SI,55V,200MA,D0-35 | 03508 | DJ2011 |
| A6CR44 | 152-0333-00 | | | SEMICOND DVC DI:SW,SI,55V,200MA,D0-35 | 03508 | DJ2011 |
| A6CR45 | 152-0333-00 | | | SEMICOND DVC DI:SW,SI,55V,200MA,D0-35 | 03508 | DJ2011 |
| A6CR46 | 152-0333-00 | | | SEMICOND DVC DI:SW,SI,55V,200MA,D0-35 | 03508 | DJ2011 |
| A6CR47 | 152-0333-00 | | | SEMICOND DVC DI:SW,SI,55V,200MA,D0-35 | 03508 | DJ2011 |
| A6CR48 | 152-0333-00 | | | SEMICOND DVC DI:SW,SI,55V,200MA,D0-35 | 03508 | DJ2011 |
| A6CR49 | 152-0333-00 | | | SEMICOND DVC DI:SW,SI,55V,200MA,D0-35 | 03508 | DJ2011 |
| A6CR52 | 152-0141-02 | | | SEMICOND DVC,DI:SW,SI,30V,150MA,30V,DO-35 | 12969 | NDP0263 (1N4152) |
| A6CR62 | 152-0333-00 | | | SEMICOND DVC DI:SW,SI,55V,200MA,D0-35 | 03508 | DJ2011 |
| A6CR63 | 152-0333-00 | | | SEMICOND DVC DI:SW,SI,55V,200MA,D0-35 | 03508 | DJ2011 |
| A6CR64 | 152-0333-00 | | | SEMICOND DVC DI:SW,SI,55V,200MA,D0-35 | 03508 | DJ2011 |
| A6CR65 | 152-0333-00 | | | SEMICOND DVC DI:SW,SI,55V,200MA,D0-35 | 03508 | DJ2011 |
| A6CR66 | 152-0333-00 | | | SEMICOND DVC DI:SW,SI,55V,200MA,D0-35 | 03508 | DJ2011 |
| A6CR67 | 152-0333-00 | | | SEMICOND DVC DI:SW,SI,55V,200MA,D0-35 | 03508 | DJ2011 |
| A6CR68 | 152-0333-00 | | | SEMICOND DVC DI:SW,SI,55V,200MA,D0-35 | 03508 | DJ2011 |
| A6CR69 | 152-0333-00 | | | SEMICOND DVC DI:SW,SI,55V,200MA,D0-35 | 03508 | DJ2011 |
| A6CR73 | 152-0141-02 | | | SEMICOND DVC,DI:SW,SI,30V,150MA,30V,DO-35 | 12969 | NDP0263 (1N4152) |
| A6CR82 | 152-0141-02 | | | SEMICOND DVC,DI:SW,SI,30V,150MA,30V,DO-35 | 12969 | NDP0263 (1N4152) |
| A6CR83 | 152-0141-02 | | | SEMICOND DVC,DI:SW,SI,30V,150MA,30V,DO-35 | 12969 | NDP0263 (1N4152) |
| A6CR86 | 152-0141-02 | | | SEMICOND DVC,DI:SW,SI,30V,150MA,30V,DO-35 | 12969 | NDP0263 (1N4152) |
| A6CR88 | 152-0141-02 | | | SEMICOND DVC,DI:SW,SI,30V,150MA,30V,DO-35 | 12969 | NDP0263 (1N4152) |
| A6CR212 | 152-0141-02 | | | SEMICOND DVC,DI:SW,SI,30V,150MA,30V,DO-35 | 12969 | NDP0263 (1N4152) |
| A6CR213 | 152-0141-02 | | | SEMICOND DVC,DI:SW,SI,30V,150MA,30V,DO-35 | 12969 | NDP0263 (1N4152) |
| A6CR214 | 152-0141-02 | | | SEMICOND DVC,DI:SW,SI,30V,150MA,30V,DO-35 | 12969 | NDP0263 (1N4152) |
| A6CR215 | 152-0141-02 | | | SEMICOND DVC,DI:SW,SI,30V,150MA,30V,DO-35 | 12969 | NDP0263 (1N4152) |
| A6CR216 | 152-0141-02 | | | SEMICOND DVC,DI:SW,SI,30V,150MA,30V,DO-35 | 12969 | NDP0263 (1N4152) |
| A6CR217 | 152-0141-02 | | | SEMICOND DVC,DI:SW,SI,30V,150MA,30V,DO-35 | 12969 | NDP0263 (1N4152) |
| A6CR218 | 152-0141-02 | | | SEMICOND DVC,DI:SW,SI,30V,150MA,30V,DO-35 | 12969 | NDP0263 (1N4152) |
| A6CR241 | 152-0141-02 | | | SEMICOND DVC,DI:SW,SI,30V,150MA,30V,DO-35 | 12969 | NDP0263 (1N4152) |
| A6CR243 | 152-0141-02 | | | SEMICOND DVC,DI:SW,SI,30V,150MA,30V,DO-35 | 12969 | NDP0263 (1N4152) |



http://manoman.sqhill.com

| Component No. | Tektronix Part No. | Serial/Model No. Eff | Dscont | Name & Description | Mfr Code | Mfr Part Number |
|---|---|---|---|---|---|---|
| A6CR245 | 152-0141-02 | | | SEMICOND DVC,DI:SW,SI,30V,150MA,30V,DO-35 | 12969 | NDP0263 (1N4152) |
| A6CR247 | 152-0141-02 | | | SEMICOND DVC,DI:SW,SI,30V,150MA,30V,DO-35 | 12969 | NDP0263 (1N4152) |
| A6J1 | 131-0767-10 | | | CONN,RCPT,ELEC:CKT BD,38/76 CONTACT | 80009 | 131-0767-10 |
| A6J2 | 131-0767-10 | | | CONN,RCPT,ELEC:CKT BD,38/76 CONTACT | 80009 | 131-0767-10 |
| A6J3 | 131-0767-10 | | | CONN,RCPT,ELEC:CKT BD,38/76 CONTACT | 80009 | 131-0767-10 |
| A6J78 | 131-1003-00 | | | CONN,RCPT,ELEC:CKT BD MT,3 PRONG | 80009 | 131-1003-00 |
| A6J201 | 131-1003-00 | | | CONN,RCPT,ELEC:CKT BD MT,3 PRONG | 80009 | 131-1003-00 |
| A6J202 | 131-1003-00 | | | CONN,RCPT,ELEC:CKT BD MT,3 PRONG | 80009 | 131-1003-00 |
| A6P3 | — — | | | (REFER TO MAINT SECTION FOR SQ PIN REPL) | | |
| A6P9 | — — | | | (REFER TO MAINT SECTION FOR SQ PIN REPL) | | |
| A6P18 | — — | | | (REFER TO MAINT SECTION FOR SQ PIN REPL) | | |
| A6P46 | — — | | | (REFER TO MAINT SECTION FOR SQ PIN REPL) | | |
| A6P67 | — — | | | (REFER TO MAINT SECTION FOR SQ PIN REPL) | | |
| A6P79 | — — | | | (REFER TO MAINT SECTION FOR SQ PIN REPL) | | |
| A6P80 | — — | | | (REFER TO MAINT SECTION FOR SQ PIN REPL) | | |
| A6P82 | — — | | | (REFER TO MAINT SECTION FOR SQ PIN REPL) | | |
| A6P83 | — — | | | (REFER TO MAINT SECTION FOR SQ PIN REPL) | | |
| A6P85 | — — | | | (REFER TO MAINT SECTION FOR SQ PIN REPL) | | |
| A6P87 | — — | | | (REFER TO MAINT SECTION FOR SQ PIN REPL) | | |
| A6P89 | — — | | | (REFER TO MAINT SECTION FOR SQ PIN REPL) | | |
| A6Q18 | 151-0424-00 | | | TRANSISTOR:SILICON,NPN | 04713 | SPS8246 |
| A6Q89 | 151-0188-00 | | | TRANSISTOR:PNP,SI,TO-92 | 04713 | SPS6868 |
| A6Q90 | 151-0190-00 | | | TRANSISTOR:NPN,SI,TO-92 | 04713 | SPS7969 |
| A6R3 | 315-0153-00 | | | RES.,FXD,CMPSN:15K OHM,5%,0.25W | 57668 | NTR25J-E 15K |
| A6R14 | 315-0682-00 | | | RES.,FXD,CMPSN:6.8K OHM,5%,0.25W | 57668 | NTR25J-E06K8 |
| A6R15 | 315-0103-00 | | | RES.,FXD,CMPSN:10K OHM,5%,0.25W | 57668 | NTR25J-E10K0 |
| A6R16 | 315-0333-00 | | | RES.,FXD,CMPSN:33K OHM,5%,0.25W | 57668 | NTR25J-E33K0 |
| A6R17 | 315-0153-00 | | | RES.,FXD,CMPSN:15K OHM,5%,0.25W | 57668 | NTR25J-E 15K |
| A6R18 | 315-0512-00 | | | RES.,FXD,CMPSN:5.1K OHM,5%,0.25W | 57668 | NTR25J-E05K1 |
| A6R19 | 315-0221-00 | | | RES.,FXD,CMPSN:220 OHM,5%,0.25W | 57668 | NTR25J-E220E |
| A6R22 | 321-0260-00 | | | RES.,FXD,FILM:4.99K OHM,1%,0.125W | 91637 | MFF1816G49900F |
| A6R26 | 315-0470-00 | | | RES.,FXD,CMPSN:47 OHM,5%,0.25W | 57668 | NTR25J-E47E0 |
| A6R32 | 307-0106-00 | | | RES.,FXD,CMPSN:4.7 OHM,5%,0.25W | 01121 | CB47G5 |
| A6R33 | 307-0106-00 | | | RES.,FXD,CMPSN:4.7 OHM,5%,0.25W | 01121 | CB47G5 |
| A6R34 | 307-0106-00 | | | RES.,FXD,CMPSN:4.7 OHM,5%,0.25W | 01121 | CB47G5 |
| A6R35 | 307-0106-00 | | | RES.,FXD,CMPSN:4.7 OHM,5%,0.25W | 01121 | CB47G5 |
| A6R42 | 307-0106-00 | | | RES.,FXD,CMPSN:4.7 OHM,5%,0.25W | 01121 | CB47G5 |
| A6R43 | 307-0106-00 | | | RES.,FXD,CMPSN:4.7 OHM,5%,0.25W | 01121 | CB47G5 |
| A6R44 | 307-0106-00 | | | RES.,FXD,CMPSN:4.7 OHM,5%,0.25W | 01121 | CB47G5 |
| A6R45 | 307-0106-00 | | | RES.,FXD,CMPSN:4.7 OHM,5%,0.25W | 01121 | CB47G5 |
| A6R52 | 315-0472-00 | | | RES.,FXD,CMPSN:4.7K OHM,5%,0.25W | 57668 | NTR25J-E04K7 |
| A6R53 | 321-0260-00 | | | RES.,FXD,FILM:4.99K OHM,1%,0.125W | 91637 | MFF1816G49900F |
| A6R55 | 315-0470-00 | | | RES.,FXD,CMPSN:47 OHM,5%,0.25W | 57668 | NTR25J-E47E0 |
| A6R56 | 315-0470-00 | | | RES.,FXD,CMPSN:47 OHM,5%,0.25W | 57668 | NTR25J-E47E0 |
| A6R62 | 307-0106-00 | | | RES.,FXD,CMPSN:4.7 OHM,5%,0.25W | 01121 | CB47G5 |
| A6R63 | 307-0106-00 | | | RES.,FXD,CMPSN:4.7 OHM,5%,0.25W | 01121 | CB47G5 |
| A6R64 | 307-0106-00 | | | RES.,FXD,CMPSN:4.7 OHM,5%,0.25W | 01121 | CB47G5 |
| A6R65 | 307-0106-00 | | | RES.,FXD,CMPSN:4.7 OHM,5%,0.25W | 01121 | CB47G5 |
| A6R73 | 315-0682-00 | | | RES.,FXD,CMPSN:6.8K OHM,5%,0.25W | 57668 | NTR25J-E06K8 |
| A6R76 | 315-0202-00 | | | RES.,FXD,CMPSN:2K OHM,5%,0.25W | 57668 | NTR25J-E02K0 |
| A6R83 | 315-0243-00 | | | RES.,FXD,CMPSN:24K OHM,5%,0.25W | 57668 | NTR25J-E24K0 |
| A6R85 | 315-0105-00 | | | RES.,FXD,CMPSN:1M OHM,5%,0.25W | 57668 | NTR255-E 1M |
| A6R86 | 315-0152-00 | | | RES.,FXD,CMPSN:1.5K OHM,5%,0.25W | 57668 | NTR25J-E01K5 |
| A6R87 | 315-0912-00 | | | RES.,FXD,CMPSN:9.1K OHM,5%,0.25W | 57668 | NTR25J-E09K1 |



http://manoman.sqhill.com

| Component No. | Tektronix Part No. | Serial/Model No. Eff | Dscont | Name & Description | Mfr Code | Mfr Part Number |
|---|---|---|---|---|---|---|
| A6R88 | 315-0152-00 | | | RES.,FXD,CMPSN:1.5K OHM,5%,0.25W | 57668 | NTR25J-E01K5 |
| A6R89 | 315-0102-00 | | | RES.,FXD,CMPSN:1K OHM,5%,0.25W | 57668 | NTR25JE01K0 |
| A6R90 | 315-0512-00 | | | RES.,FXD,CMPSN:5.1K OHM,5%,0.25W | 57668 | NTR25J-E05K1 |
| A6R91 | 321-0231-00 | | | RES.,FXD,FILM:2.49K OHM,1%,0.125W | 91637 | MFF1816G24900F |
| A6R93 | 315-0132-00 | | | RES.,FXD,CMPSN:1.3K OHM,5%,0.25W | 57668 | NTR25J-E01K3 |
| A6R94 | 315-0132-00 | | | RES.,FXD,CMPSN:1.3K OHM,5%,0.25W | 57668 | NTR25J-E01K3 |
| A6R201 | 315-0102-00 | | | RES.,FXD,CMPSN:1K OHM,5%,0.25W | 57668 | NTR25JE01K0 |
| A6R202 | 315-0102-00 | | | RES.,FXD,CMPSN:1K OHM,5%,0.25W | 57668 | NTR25JE01K0 |
| A6R212 | 315-0751-00 | | | RES.,FXD,CMPSN:750 OHM,5%,0.25W | 57668 | NTR25J-E750E |
| A6R213 | 315-0751-00 | | | RES.,FXD,CMPSN:750 OHM,5%,0.25W | 57668 | NTR25J-E750E |
| A6R214 | 315-0751-00 | | | RES.,FXD,CMPSN:750 OHM,5%,0.25W | 57668 | NTR25J-E750E |
| A6R215 | 315-0751-00 | | | RES.,FXD,CMPSN:750 OHM,5%,0.25W | 57668 | NTR25J-E750E |
| A6R223 | 315-0103-00 | | | RES.,FXD,CMPSN:10K OHM,5%,0.25W | 57668 | NTR25J-E10K0 |
| A6R224 | 315-0103-00 | | | RES.,FXD,CMPSN:10K OHM,5%,0.25W | 57668 | NTR25J-E10K0 |
| A6R227 | 315-0511-00 | | | RES.,FXD,CMPSN:510 OHM,5%,0.25W | 57668 | NTR25J-E 510E |
| A6R228 | 315-0511-00 | | | RES.,FXD,CMPSN:510 OHM,5%,0.25W | 57668 | NTR25J-E 510E |
| A6R229 | 315-0511-00 | | | RES.,FXD,CMPSN:510 OHM,5%,0.25W | 57668 | NTR25J-E 510E |
| A6R241 | 315-0133-00 | | | RES.,FXD,CMPSN:13K OHM,5%,0.25W | 57668 | NTR25J-E 13K |
| A6R242 | 315-0513-00 | | | RES.,FXD,CMPSN:51K OHM,5%,0.25W | 57668 | NTR25J-E51K0 |
| A6R243 | 315-0133-00 | | | RES.,FXD,CMPSN:13K OHM,5%,0.25W | 57668 | NTR25J-E 13K |
| A6R244 | 315-0753-00 | | | RES.,FXD,CMPSN:75K OHM,5%,0.25W | 57668 | NTR25J-E75K0 |
| A6R245 | 321-0308-00 | | | RES.,FXD,FILM:15.8K OHM,1%,0.125W | 91637 | MFF1816G15801F |
| A6R246 | 315-0513-00 | | | RES.,FXD,CMPSN:51K OHM,5%,0.25W | 57668 | NTR25J-E51K0 |
| A6R247 | 321-0319-00 | | | RES.,FXD,FILM:20.5K OHM,1%,0.125W | 91637 | MFF1816G20501F |
| A6R248 | 321-0335-00 | | | RES.,FXD,FILM:30.1K OHM,1%,0.125W | 91637 | CMF55116G30101F |
| A6R251 | 315-0154-00 | | | RES.,FXD,CMPSN:150K OHM,5%,0.25W | 57668 | NTR25J-E150K |
| A6R252 | 321-0335-00 | | | RES.,FXD,FILM:30.1K OHM,1%,0.125W | 91637 | CMF55116G30101F |
| A6R253 | 321-0344-00 | | | RES.,FXD,FILM:37.4K OHM,1%,0.125W | 91637 | MFF1816G37401F |
| A6R254 | 321-0335-00 | | | RES.,FXD,FILM:30.1K OHM,1%,0.125W | 91637 | CMF55116G30101F |
| A6R255 | 315-0513-00 | | | RES.,FXD,CMPSN:51K OHM,5%,0.25W | 57668 | NTR25J-E51K0 |
| A6R256 | 315-0154-00 | | | RES.,FXD,CMPSN:150K OHM,5%,0.25W | 57668 | NTR25J-E150K |
| A6R257 | 321-0335-00 | | | RES.,FXD,FILM:30.1K OHM,1%,0.125W | 91637 | CMF55116G30101F |
| A6R258 | 321-0335-00 | | | RES.,FXD,FILM:30.1K OHM,1%,0.125W | 91637 | CMF55116G30101F |
| A6R264 | 315-0752-00 | | | RES.,FXD,CMPSN:7.5K OHM,5%,0.25W | 57668 | NTR25J-E07K5 |
| A6U232 | 155-0015-01 | | | MICROCIRCUIT,DI:ML,ANALOG DATA SWITCH | 80009 | 155-0015-01 |
| A6U262 | 155-0015-01 | | | MICROCIRCUIT,DI:ML,ANALOG DATA SWITCH | 80009 | 155-0015-01 |



http://manoman.sqhill.com

| Component No. | Tektronix Part No. | Serial/Model No. Eff | Dscont | Name & Description | Mfr Code | Mfr Part Number |
|---|---|---|---|---|---|---|
| A7 | 670-5098-00 | | | CKT BOARD ASSY:TRIGGER A FOLLOWER | 80009 | 670-5098-00 |
| A7P20 | 131-1149-00 | | | CONTACT,ELEC:CKT CARD EDGE | 80009 | 131-1149-00 |
| A7P20 | —— —— | | | (QUANTITY OF 2) | | |
| A7P21 | 131-1149-00 | | | CONTACT,ELEC:CKT CARD EDGE | 80009 | 131-1149-00 |
| A7P21 | —— —— | | | (QUANTITY OF 2) | | |
| A7P22 | 131-1149-00 | | | CONTACT,ELEC:CKT CARD EDGE | 80009 | 131-1149-00 |
| A7P22 | —— —— | | | (QUANTITY OF 2) | | |
| A10 | 670-5096-00 | | | CKT BOARD ASSY:HORIZONTAL A FOLLOWER | 80009 | 670-5096-00 |
| A10P11 | 131-1149-00 | | | CONTACT,ELEC:CKT CARD EDGE | 80009 | 131-1149-00 |
| A10P11 | —— —— | | | (QUANTITY OF 2) | | |
| A10P12 | 131-1149-00 | | | CONTACT,ELEC:CKT CARD EDGE | 80009 | 131-1149-00 |
| A10P12 | —— —— | | | (QUANTITY OF 2) | | |
| A10P13 | 131-1149-00 | | | CONTACT,ELEC:CKT CARD EDGE | 80009 | 131-1149-00 |
| A10P13 | —— —— | | | (QUANTITY OF 2) | | |
| A10R58 | 317-0510-00 | | | RES.,FXD,CMPSN:51 OHM,5%,0.125W | 01121 | BB5105 |
| A10R59 | 317-0510-00 | | | RES.,FXD,CMPSN:51 OHM,5%,0.125W | 01121 | BB5105 |
| A11 | 670-5097-00 | | | CKT BOARD ASSY:VERTICAL CHANNEL FOLLOWER | 80009 | 670-5097-00 |
| A11P11 | 131-1149-00 | | | CONTACT,ELEC:CKT CARD EDGE | 80009 | 131-1149-00 |
| A11P11 | —— —— | | | (QUANTITY OF 2) | | |
| A11P12 | 131-1149-00 | | | CONTACT,ELEC:CKT CARD EDGE | 80009 | 131-1149-00 |
| A11P12 | —— —— | | | (QUANTITY OF 2) | | |
| A11P13 | 131-1149-00 | | | CONTACT,ELEC:CKT CARD EDGE | 80009 | 131-1149-00 |
| A11P13 | —— —— | | | (QUANTITY OF 2) | | |
| A12 | 670-5097-00 | | | CKT BOARD ASSY:VERTICAL CHANNEL FOLLOWER | 80009 | 670-5097-00 |
| A12P11 | 131-1149-00 | | | CONTACT,ELEC:CKT CARD EDGE | 80009 | 131-1149-00 |
| A12P11 | —— —— | | | (QUANTITY OF 2) | | |
| A12P12 | 131-1149-00 | | | CONTACT,ELEC:CKT CARD EDGE | 80009 | 131-1149-00 |
| A12P12 | —— —— | | | (QUANTITY OF 2) | | |
| A12P13 | 131-1149-00 | | | CONTACT,ELEC:CKT CARD EDGE | 80009 | 131-1149-00 |
| A12P13 | —— —— | | | (QUANTITY OF 2) | | |



http://manoman.sqhill.com

| Component No. | Tektronix Part No. | Serial/Model No. Eff | Dscont | Name & Description | Mfr Code | Mfr Part Number |
|---|---|---|---|---|---|---|
| A13 | 670-8408-00 | | | CKT BOARD ASSY:LOGIC | 80009 | 670-8408-00 |
| A13C303 | 281-0775-00 | | | CAP.,FXD,CER DI:0.1UF,20%,50V | 04222 | MA205E104MAA |
| A13C304 | 281-0775-00 | | | CAP.,FXD,CER DI:0.1UF,20%,50V | 04222 | MA205E104MAA |
| A13C314 | 281-0809-00 | | | CAP.,FXD,CER DI:200PF,5%,100V | 04222 | MA101A201JAA |
| A13C315 | 281-0603-00 | | | CAP.,FXD,CER DI:39PF,5%,500V | 59660 | 308-000C0G0390J |
| A13C316 | 283-0059-00 | | | CAP.,FXD,CER DI:1UF,+80-20%,50V | 96733 | ADVIXE |
| A13C320 | 283-0059-00 | | | CAP.,FXD,CER DI:1UF,+80-20%,50V | 96733 | ADVIXE |
| A13C341 | 281-0756-00 | | | CAP.,FXD,CER DI:2.2PF,0.5%,200V | 96733 | R2732 |
| A13C342 | 281-0862-00 | | | CAP.,FXD,CER DI:0.001UF,+80-20%,100V | 96733 | ADIVSE |
| A13C343 | 281-0898-00 | | | CAP.,FXD,CER DI:7.5PF,+/-0.5PF,500V | 96733 | XR3446 |
| A13C351 | 281-0862-00 | | | CAP.,FXD,CER DI:0.001UF,+80-20%,100V | 96733 | ADIVSE |
| A13C367 | 281-0756-00 | | | CAP.,FXD,CER DI:2.2PF,0.5%,200V | 96733 | R2732 |
| A13C368 | 281-0862-00 | | | CAP.,FXD,CER DI:0.001UF,+80-20%,100V | 96733 | ADIVSE |
| A13C369 | 281-0898-00 | | | CAP.,FXD,CER DI:7.5PF,+/-0.5PF,500V | 96733 | XR3446 |
| A13C394 | 281-0756-00 | | | CAP.,FXD,CER DI:2.2PF,0.5%,200V | 96733 | R2732 |
| A13C395 | 281-0862-00 | | | CAP.,FXD,CER DI:0.001UF,+80-20%,100V | 96733 | ADIVSE |
| A13C397 | 281-0898-00 | | | CAP.,FXD,CER DI:7.5PF,+/-0.5PF,500V | 96733 | XR3446 |
| A13C408 | 281-0773-00 | | | CAP.,FXD,CER DI:0.1UF,20%,50V | 04222 | MA201C103KAA |
| A13C409 | 283-0059-00 | | | CAP.,FXD,CER DI:1UF,+80-20%,50V | 96733 | ADVIXE |
| A13C429 | 283-0059-00 | | | CAP.,FXD,CER DI:1UF,+80-20%,50V | 96733 | ADVIXE |
| A13C436 | 281-0775-00 | | | CAP.,FXD,CER DI:0.1UF,20%,50V | 04222 | MA205E104MAA |
| A13C439 | 281-0862-00 | | | CAP.,FXD,CER DI:0.001UF,+80-20%,100V | 96733 | ADIVSE |
| A13CR327 | 152-0141-02 | | | SEMICOND DVC,DI:SW,SI,30V,150MA,30V,DO-35 | 12969 | NDP0263 (1N4152) |
| A13CR328 | 152-0141-02 | | | SEMICOND DVC,DI:SW,SI,30V,150MA,30V,DO-35 | 12969 | NDP0263 (1N4152) |
| A13CR329 | 152-0141-02 | | | SEMICOND DVC,DI:SW,SI,30V,150MA,30V,DO-35 | 12969 | NDP0263 (1N4152) |
| A13CR332 | 152-0141-02 | | | SEMICOND DVC,DI:SW,SI,30V,150MA,30V,DO-35 | 12969 | NDP0263 (1N4152) |
| A13CR333 | 152-0141-02 | | | SEMICOND DVC,DI:SW,SI,30V,150MA,30V,DO-35 | 12969 | NDP0263 (1N4152) |
| A13CR359 | 152-0141-02 | | | SEMICOND DVC,DI:SW,SI,30V,150MA,30V,DO-35 | 12969 | NDP0263 (1N4152) |
| A13CR386 | 152-0141-02 | | | SEMICOND DVC,DI:SW,SI,30V,150MA,30V,DO-35 | 12969 | NDP0263 (1N4152) |
| A13CR417 | 152-0141-02 | | | SEMICOND DVC,DI:SW,SI,30V,150MA,30V,DO-35 | 12969 | NDP0263 (1N4152) |
| A13CR419 | 152-0141-02 | | | SEMICOND DVC,DI:SW,SI,30V,150MA,30V,DO-35 | 12969 | NDP0263 (1N4152) |
| A13CR426 | 152-0141-02 | | | SEMICOND DVC,DI:SW,SI,30V,150MA,30V,DO-35 | 12969 | NDP0263 (1N4152) |
| A13CR427 | 152-0141-02 | | | SEMICOND DVC,DI:SW,SI,30V,150MA,30V,DO-35 | 12969 | NDP0263 (1N4152) |
| A13J395 | 131-1003-00 | | | CONN,RCPT,ELEC:CKT BD MT,3 PRONG | 80009 | 131-1003-00 |
| A13J406 | 131-1003-00 | | | CONN,RCPT,ELEC:CKT BD MT,3 PRONG | 80009 | 131-1003-00 |
| A13L303 | 108-0245-00 | | | COIL,RF:3.9UH | 76493 | B6310-1 |
| A13L304 | 108-0329-00 | | | COIL,RF:2.5UH | 80009 | 108-0329-00 |
| A13L317 | 108-0245-00 | | | COIL,RF:3.9UH | 76493 | B6310-1 |
| A13L320 | 108-0245-00 | | | COIL,RF:3.9UH | 76493 | B6310-1 |
| A13L408 | 108-0245-00 | | | COIL,RF:3.9UH | 76493 | B6310-1 |
| A13L409 | 108-0245-00 | | | COIL,RF:3.9UH | 76493 | B6310-1 |
| A13L436 | 108-0245-00 | | | COIL,RF:3.9UH | 76493 | B6310-1 |
| A13Q336 | 151-0199-00 | | | TRANSISTOR:PNP,SI,T0-92 | 04713 | SPS6866K |
| A13Q342 | 151-0424-00 | | | TRANSISTOR:SILICON,NPN | 04713 | SPS8246 |
| A13Q352 | 151-0424-00 | | | TRANSISTOR:SILICON,NPN | 04713 | SPS8246 |
| A13Q364 | 151-0199-00 | | | TRANSISTOR:PNP,SI,T0-92 | 04713 | SPS6866K |
| A13Q368 | 151-0424-00 | | | TRANSISTOR:SILICON,NPN | 04713 | SPS8246 |
| A13Q391 | 151-0199-00 | | | TRANSISTOR:PNP,SI,T0-92 | 04713 | SPS6866K |
| A13Q395 | 151-0424-00 | | | TRANSISTOR:SILICON,NPN | 04713 | SPS8246 |
| A13Q416 | 151-0198-00 | | | TRANSISTOR:SELECTED | 04713 | SPS8802-1 |
| A13Q452 | 151-0192-00 | | | TRANSISTOR:SELECTED | 04713 | SPS8801 |
| A13R303 | 315-0750-00 | | | RES.,FXD,CMPSN:75 OHM,5%,0.25W | 57668 | NTR25J-E75E0 |
| A13R304 | 315-0223-00 | | | RES.,FXD,CMPSN:22K OHM,5%,0.25W | 57668 | NTR25J-E 22K |



http://manoman.sqhill.com

| Component No. | Tektronix Part No. | Serial/Model No. Eff | Dscont | Name & Description | Mfr Code | Mfr Part Number |
|---|---|---|---|---|---|---|
| A13R305 | 321-0193-00 | | | RES.,FXD,FILM:1K OHM,1%,0.125W | 19701 | 5043ED1K00F |
| A13R306 | 315-0223-00 | | | RES.,FXD,CMPSN:22K OHM,5%,0.25W | 57668 | NTR25J-E 22K |
| A13R307 | 321-0193-00 | | | RES.,FXD,FILM:1K OHM,1%,0.125W | 19701 | 5043ED1K00F |
| A13R312 | 321-0147-00 | | | RES.,FXD,FILM:332 OHM,1%,0.125W | 91637 | CMF55116G332R0F |
| A13R313 | 321-0239-00 | | | RES.,FXD,FILM:3.01K OHM,1%,0.125W | 24546 | CT55 3011 F |
| A13R314 | 315-0912-00 | | | RES.,FXD,CMPSN:9.1K OHM,5%,0.25W | 57668 | NTR25J-E09K1 |
| A13R315 | 315-0512-00 | | | RES.,FXD,CMPSN:5.1K OHM,5%,0.25W | 57668 | NTR25J-E05K1 |
| A13R316 | 315-0101-00 | | | RES.,FXD,CMPSN:100 OHM,5%,0.25W | 57668 | NTR25J-E 100E |
| A13R327 | 315-0102-00 | | | RES.,FXD,CMPSN:1K OHM,5%,0.25W | 57668 | NTR25JE01K0 |
| A13R328 | 315-0102-00 | | | RES.,FXD,CMPSN:1K OHM,5%,0.25W | 57668 | NTR25JE01K0 |
| A13R329 | 315-0511-00 | | | RES.,FXD,CMPSN:510 OHM,5%,0.25W | 57668 | NTR25J-E 510E |
| A13R332 | 315-0102-00 | | | RES.,FXD,CMPSN:1K OHM,5%,0.25W | 57668 | NTR25JE01K0 |
| A13R333 | 315-0391-00 | | | RES.,FXD,CMPSN:390 OHM,5%,0.25W | 57668 | NTR25J-E390E |
| A13R336 | 315-0272-00 | | | RES.,FXD,CMPSN:2.7K OHM,5%,0.25W | 57668 | NTR25J-E02K7 |
| A13R337 | 315-0102-00 | | | RES.,FXD,CMPSN:1K OHM,5%,0.25W | 57668 | NTR25JE01K0 |
| A13R338 | 315-0123-00 | | | RES.,FXD,CMPSN:12K OHM,5%,0.25W | 57668 | NTR25J-E12K0 |
| A13R339 | 315-0821-00 | | | RES.,FXD,CMPSN:820 OHM,5%,0.25W | 57668 | NTR25J-E 820E |
| A13R341 | 315-0681-00 | | | RES.,FXD,CMPSN:680 OHM,5%,0.25W | 57668 | NTR25J-E680E |
| A13R342 | 315-0221-00 | | | RES.,FXD,CMPSN:220 OHM,5%,0.25W | 57668 | NTR25J-E220E |
| A13R343 | 315-0472-00 | | | RES.,FXD,CMPSN:4.7K OHM,5%,0.25W | 57668 | NTR25J-E04K7 |
| A13R351 | 315-0101-00 | | | RES.,FXD,CMPSN:100 OHM,5%,0.25W | 57668 | NTR25J-E 100E |
| A13R352 | 315-0103-00 | | | RES.,FXD,CMPSN:10K OHM,5%,0.25W | 57668 | NTR25J-E10K0 |
| A13R353 | 315-0223-00 | | | RES.,FXD,CMPSN:22K OHM,5%,0.25W | 57668 | NTR25J-E 22K |
| A13R358 | 315-0391-00 | | | RES.,FXD,CMPSN:390 OHM,5%,0.25W | 57668 | NTR25J-E390E |
| A13R359 | 315-0122-00 | | | RES.,FXD,CMPSN:1.2K OHM,5%,0.25W | 57668 | NTR25J-E01K2 |
| A13R362 | 315-0222-00 | | | RES.,FXD,CMPSN:2.2K OHM,5%,0.25W | 57668 | NTR25J-E02K2 |
| A13R363 | 315-0102-00 | | | RES.,FXD,CMPSN:1K OHM,5%,0.25W | 57668 | NTR25JE01K0 |
| A13R364 | 315-0123-00 | | | RES.,FXD,CMPSN:12K OHM,5%,0.25W | 57668 | NTR25J-E12K0 |
| A13R365 | 315-0821-00 | | | RES.,FXD,CMPSN:820 OHM,5%,0.25W | 57668 | NTR25J-E 820E |
| A13R367 | 315-0681-00 | | | RES.,FXD,CMPSN:680 OHM,5%,0.25W | 57668 | NTR25J-E680E |
| A13R368 | 315-0221-00 | | | RES.,FXD,CMPSN:220 OHM,5%,0.25W | 57668 | NTR25J-E220E |
| A13R369 | 315-0472-00 | | | RES.,FXD,CMPSN:4.7K OHM,5%,0.25W | 57668 | NTR25J-E04K7 |
| A13R383 | 315-0103-00 | | | RES.,FXD,CMPSN:10K OHM,5%,0.25W | 57668 | NTR25J-E10K0 |
| A13R384 | 315-0103-00 | | | RES.,FXD,CMPSN:10K OHM,5%,0.25W | 57668 | NTR25J-E10K0 |
| A13R386 | 315-0391-00 | | | RES.,FXD,CMPSN:390 OHM,5%,0.25W | 57668 | NTR25J-E390E |
| A13R387 | 315-0122-00 | | | RES.,FXD,CMPSN:1.2K OHM,5%,0.25W | 57668 | NTR25J-E01K2 |
| A13R389 | 315-0222-00 | | | RES.,FXD,CMPSN:2.2K OHM,5%,0.25W | 57668 | NTR25J-E02K2 |
| A13R390 | 315-0102-00 | | | RES.,FXD,CMPSN:1K OHM,5%,0.25W | 57668 | NTR25JE01K0 |
| A13R391 | 315-0123-00 | | | RES.,FXD,CMPSN:12K OHM,5%,0.25W | 57668 | NTR25J-E12K0 |
| A13R392 | 315-0821-00 | | | RES.,FXD,CMPSN:820 OHM,5%,0.25W | 57668 | NTR25J-E 820E |
| A13R394 | 315-0681-00 | | | RES.,FXD,CMPSN:680 OHM,5%,0.25W | 57668 | NTR25J-E680E |
| A13R395 | 315-0221-00 | | | RES.,FXD,CMPSN:220 OHM,5%,0.25W | 57668 | NTR25J-E220E |
| A13R396 | 315-0100-00 | | | RES.,FXD,CMPSN:10 OHM,5%,0.25W | 57668 | NTR25J-E 10E0 |
| A13R397 | 315-0472-00 | | | RES.,FXD,CMPSN:4.7K OHM,5%,0.25W | 57668 | NTR25J-E04K7 |
| A13R413 | 315-0682-00 | | | RES.,FXD,CMPSN:6.8K OHM,5%,0.25W | 57668 | NTR25J-E06K8 |
| A13R414 | 315-0303-00 | | | RES.,FXD,CMPSN:30K OHM,5%,0.25W | 57668 | NTR25J-E 30K |
| A13R415 | 315-0512-00 | | | RES.,FXD,CMPSN:5.1K OHM,5%,0.25W | 57668 | NTR25J-E05K1 |
| A13R416 | 315-0242-00 | | | RES.,FXD,CMPSN:2.4K OHM,5%,0.25W | 57668 | NTR25J-E02K4 |
| A13R419 | 321-0243-00 | | | RES.,FXD,FILM:3.32K OHM,1%,0.125W | 91637 | MFF1816G33200F |
| A13R423 | 315-0622-00 | | | RES.,FXD,CMPSN:6.2K OHM,5%,0.25W | 57668 | NTR25J-E 6K2 |
| A13R424 | 321-0160-00 | | | RES.,FXD,FILM:453 OHM,1%,0.125W | 91637 | CMF116G453R0F |
| A13R425 | 315-0470-00 | | | RES.,FXD,CMPSN:47 OHM,5%,0.25W | 57668 | NTR25J-E47E0 |
| A13R428 | 321-0243-00 | | | RES.,FXD,FILM:3.32K OHM,1%,0.125W | 91637 | MFF1816G33200F |
| A13R429 | 315-0151-00 | | | RES.,FXD,CMPSN:150 OHM,5%,0.25W | 57668 | NTR25J-E150E |



http://manoman.sqhill.com

| Component No. | Tektronix Part No. | Serial/Model No. Eff | Dscont | Name & Description | Mfr Code | Mfr Part Number |
|---|---|---|---|---|---|---|
| A13R437 | 321-0205-00 | | | RES.,FXD,FILM:1.33K OHM,1%,0.125W | 91637 | CMF55116G13300F |
| A13R441 | 315-0622-00 | | | RES.,FXD,CMPSN:6.2K OHM,5%,0.25W | 57668 | NTR25J-E 6K2 |
| A13R451 | 321-0222-00 | | | RES.,FXD,FILM:2K OHM,1%,0.125W | 91637 | MFF1816G20000F |
| A13R452 | 315-0104-00 | | | RES.,FXD,CMPSN:100K OHM,5%,0.25W | 57668 | NTR25J-E100K |
| A13R456 | 315-0153-00 | | | RES.,FXD,CMPSN:15K OHM,5%,0.25W | 57668 | NTR25J-E 15K |
| A13R457 | 315-0153-00 | | | RES.,FXD,CMPSN:15K OHM,5%,0.25W | 57668 | NTR25J-E 15K |
| A13U320 | 155-0011-00 | | | MICROCIRCUIT,DI:ML,CLOCK AND CHOP BLANKING | 80009 | 155-0011-00 |
| A13U356 | 156-1756-00 | | | MICROCIRCUIT,DI:DUAL D-TYPE POS-EDGE-TRIG | | |
| A13U383 | 156-1756-00 | | | MICROCIRCUIT,DI:DUAL D-TYPE POS-EDGE-TRIG | | |
| A13U440 | 155-0012-00 | | | MICROCIRCUIT,LI:ML,Z-AXIS AND AMPLIFIER | 80009 | 155-0012-00 |
| A13VR413 | 152-0166-00 | | | SEMICOND DEVICE:ZENER,0.4W,6.2V,5% | 04713 | SZ11738RL |



http://manoman.sqhill.com

| Component No. | Tektronix Part No. | Serial/Model No. Eff | Dscont | Name & Description | Mfr Code | Mfr Part Number |
|---|---|---|---|---|---|---|
| A14 | 670-8409-00 | | | CKT BOARD ASSY:TRIGGER SELECTOR | 80009 | 670-8409-00 |
| A14C240 | 290-0534-00 | | | CAP.,FXD,ELCTLT:1UF,20%,35V | 56289 | 196D105X0035HA1 |
| A14C249 | 283-0479-00 | | | CAP.,FXD,CER DI:0.47UF,+80-20%,25V | 20932 | 501ES25DP474E |
| A14C250 | 290-0488-00 | | | CAP.,FXD,ELCTLT:2.2UF,10%,20V | 90201 | TAC225K020P02 |
| A14C254 | 283-0139-00 | | | CAP.,FXD,CER DI:150PF,20%,50V | 51642 | W100-050-X5F151M |
| A14C483 | 283-0175-00 | | | CAP.,FXD,CER DI:10PF,5%,200V | 96733 | TDR43BY100DP |
| A14C486 | 281-0775-00 | | | CAP.,FXD,CER DI:0.1UF,20%,50V | 04222 | MA205E104MAA |
| A14C487 | 281-0775-00 | | | CAP.,FXD,CER DI:0.1UF,20%,50V | 04222 | MA205E104MAA |
| A14C488 | 281-0775-00 | | | CAP.,FXD,CER DI:0.1UF,20%,50V | 04222 | MA205E104MAA |
| A14C490 | 283-0423-00 | | | CAP.,FXD,CER DI:0.22UF,+80-20%,50V | 04222 | DG015E224Z |
| A14C493 | 283-0175-00 | | | CAP.,FXD,CER DI:10PF,5%,200V | 96733 | TDR43BY100DP |
| A14J201 | 131-1003-00 | | | CONN,RCPT,ELEC:CKT BD MT,3 PRONG | 80009 | 131-1003-00 |
| A14J220 | 131-1003-00 | | | CONN,RCPT,ELEC:CKT BD MT,3 PRONG | 80009 | 131-1003-00 |
| A14J270 | 131-1003-00 | | | CONN,RCPT,ELEC:CKT BD MT,3 PRONG | 80009 | 131-1003-00 |
| A14J271 | 131-1003-00 | | | CONN,RCPT,ELEC:CKT BD MT,3 PRONG | 80009 | 131-1003-00 |
| A14J400 | 131-1003-00 | | | CONN,RCPT,ELEC:CKT BD MT,3 PRONG | 80009 | 131-1003-00 |
| A14J401 | 131-1003-00 | | | CONN,RCPT,ELEC:CKT BD MT,3 PRONG | 80009 | 131-1003-00 |
| A14J496 | 131-1003-00 | | | CONN,RCPT,ELEC:CKT BD MT,3 PRONG | 80009 | 131-1003-00 |
| A14L236 | 108-0262-00 | | | COIL,RF:FIXED,510NH | 80009 | 108-0262-00 |
| A14L238 | 108-0262-00 | | | COIL,RF:FIXED,510NH | 80009 | 108-0262-00 |
| A14L246 | 108-0262-00 | | | COIL,RF:FIXED,510NH | 80009 | 108-0262-00 |
| A14L248 | 108-0262-00 | | | COIL,RF:FIXED,510NH | 80009 | 108-0262-00 |
| A14L480 | 108-0324-00 | | | COIL,RF:10MH | 76493 | 70F102A1 |
| A14L486 | 108-0550-00 | | | COIL,RF:11ONH | 80009 | 108-0550-00 |
| A14Q254 | 151-0190-00 | | | TRANSISTOR:NPN,SI,TO-92 | 04713 | SPS7969 |
| A14R201 | 321-0164-00 | | | RES.,FXD,FILM:499 OHM,1%,0.125W | 91637 | CMF55116G499R0F |
| A14R202 | 321-0164-00 | | | RES.,FXD,FILM:499 OHM,1%,0.125W | 91637 | CMF55116G499R0F |
| A14R205 | 315-0103-00 | | | RES.,FXD,CMPSN:10K OHM,5%,0.25W | 57668 | NTR25J-E10K0 |
| A14R208 | 321-0164-00 | | | RES.,FXD,FILM:499 OHM,1%,0.125W | 91637 | CMF55116G499R0F |
| A14R209 | 321-0164-00 | | | RES.,FXD,FILM:499 OHM,1%,0.125W | 91637 | CMF55116G499R0F |
| A14R211 | 325-0065-00 | | | RES.,FXD,FILM:150 OHM,0.5%,0.05W,TC=TO | | |
| A14R212 | 325-0047-00 | | | RES.,FXD,FILM:25 OHM,0.5%,0.5W | 03888 | PME50 |
| A14R213 | 325-0065-00 | | | RES.,FXD,FILM:150 OHM,0.5%,0.05W,TC=TO | | |
| A14R214 | 325-0047-00 | | | RES.,FXD,FILM:25 OHM,0.5%,0.5W | 03888 | PME50 |
| A14R215 | 325-0065-00 | | | RES.,FXD,FILM:150 OHM,0.5%,0.05W,TC=TO | | |
| A14R216 | 325-0047-00 | | | RES.,FXD,FILM:25 OHM,0.5%,0.5W | 03888 | PME50 |
| A14R217 | 325-0065-00 | | | RES.,FXD,FILM:150 OHM,0.5%,0.05W,TC=TO | | |
| A14R218 | 325-0047-00 | | | RES.,FXD,FILM:25 OHM,0.5%,0.5W | 03888 | PME50 |
| A14R219 | 321-0143-00 | | | RES.,FXD,FILM:301 OHM,1%,0.125W | 91637 | CMF55116G301R0F |
| A14R220 | 321-0126-00 | | | RES.,FXD,FILM:200 OHM,1%,0.125W | 91637 | CMF55116G200R0F |
| A14R225 | 321-0143-00 | | | RES.,FXD,FILM:301 OHM,1%,0.125W | 91637 | CMF55116G301R0F |
| A14R226 | 321-0126-00 | | | RES.,FXD,FILM:200 OHM,1%,0.125W | 91637 | CMF55116G200R0F |
| A14R232 | 321-0202-00 | | | RES.,FXD,FILM:1.24K OHM,1%,0.125W | 91637 | CMF55116G12400F |
| A14R233 | 322-0111-00 | | | RES.,FXD,FILM:140 OHM,1%,0.25W | 91637 | MFF1421G140R0F |
| A14R234 | 321-0202-00 | | | RES.,FXD,FILM:1.24K OHM,1%,0.125W | 91637 | CMF55116G12400F |
| A14R235 | 322-0170-00 | | | RES.,FXD,FILM:576 OHM,1%,0.25W | 75042 | CEBT0-5760F |
| A14R236 | 321-0147-00 | | | RES.,FXD,FILM:332 OHM,1%,0.125W | 91637 | CMF55116G332R0F |
| A14R237 | 315-0103-00 | | | RES.,FXD,CMPSN:10K OHM,5%,0.25W | 57668 | NTR25J-E10K0 |
| A14R238 | 321-0155-00 | | | RES.,FXD,FILM:402 OHM,1%,0.125W | 91637 | CMF55116G402R0F |
| A14R239 | 322-0114-00 | | | RES.,FXD,FILM:150 OHM,1%,0.25W | 75042 | CEBT0-1500F |
| A14R240 | 317-0100-00 | | | RES.,FXD,CMPSN:10 OHM,5%,0.125W | 01121 | BB1005 |
| A14R241 | 322-0085-00 | | | RES.,FXD,FILM:75 OHM,1%,0.25W | 75042 | CEBT0-75R00F |
| A14R242 | 321-0202-00 | | | RES.,FXD,FILM:1.24K OHM,1%,0.125W | 91637 | CMF55116G12400F |



http://manoman.sqhill.com

| Component No. | Tektronix Part No. | Serial/Model No. Eff | Dscont | Name & Description | Mfr Code | Mfr Part Number |
|---|---|---|---|---|---|---|
| A14R243 | 322-0111-00 | | | RES.,FXD,FILM:140 OHM,1%,0.25W | 91637 | MFF1421G140R0F |
| A14R244 | 322-0170-00 | | | RES.,FXD,FILM:576 OHM,1%,0.25W | 75042 | CEBT0-5760F |
| A14R245 | 321-0202-00 | | | RES.,FXD,FILM:1.24K OHM,1%,0.125W | 91637 | CMF55116G12400F |
| A14R246 | 321-0147-00 | | | RES.,FXD,FILM:332 OHM,1%,0.125W | 91637 | CMF55116G332R0F |
| A14R247 | 315-0103-00 | | | RES.,FXD,CMPSN:10K OHM,5%,0.25W | 57668 | NTR25J-E10K0 |
| A14R248 | 321-0155-00 | | | RES.,FXD,FILM:402 OHM,1%,0.125W | 91637 | CMF55116G402R0F |
| A14R251 | 321-0218-00 | | | RES.,FXD,FILM:1.82K OHM,1%,0.125W | 91637 | MFF1816G18200F |
| A14R252 | 321-0242-00 | | | RES.,FXD,FILM:3.24K OHM,1%,0.125W | 24546 | CT55 3241 F |
| A14R254 | 315-0102-00 | | | RES.,FXD,CMPSN:1K OHM,5%,0.25W | 57668 | NTR25JE01K0 |
| A14R255 | 311-1236-00 | | | RES.,VAR,NONWIR:250 OHM,10%,0.50W | 73138 | 72-22-0 |
| A14R256 | 321-0062-00 | | | RES.,FXD,FILM:43.2 OHM,1%,0.125W | 91637 | CMF55-116G43R20F |
| A14R263 | 322-0151-00 | | | RES.,FXD,FILM:365 OHM,1%,0.25W | 91637 | MFF1421G365R0F |
| A14R273 | 322-0239-00 | | | RES.,FXD,FILM:3.01K OHM,1%,0.25W | 75042 | CEBT0-3011F |
| A14R274 | 311-1248-00 | | | RES.,VAR,NONWIR:500 OHM,10%,0.50W | 73138 | 72-23-0 |
| A14R277 | 315-0510-00 | | | RES.,FXD,CMPSN:51 OHM,5%,0.25W | 57668 | NTR25J-E51E0 |
| A14R278 | 322-0085-00 | | | RES.,FXD,FILM:75 OHM,1%,0.25W | 75042 | CEBT0-75R00F |
| A14R279 | 311-1936-00 | | | RES.,VAR,NONWIR:CKT BD,50 OHM,20%,0.5W | 73138 | 72XR50-232A |
| A14R280 | 315-0510-00 | | | RES.,FXD,CMPSN:51 OHM,5%,0.25W | 57668 | NTR25J-E51E0 |
| A14R464 | 321-0201-00 | | | RES.,FXD,FILM:1.21K OHM,1%,0.125W | 91637 | CMF55116G12100F |
| A14R465 | 321-0285-00 | | | RES.,FXD,FILM:9.09K OHM,1%,0.125W | 91637 | MFF1816G90900F |
| A14R480 | 311-1237-00 | | | RES.,VAR,NONWIR:1K OHM,10%,0.50W | 32997 | 3386X-T07-102 |
| A14R481 | 321-0179-00 | | | RES.,FXD,FILM:715 OHM,1%,0.125W | 91637 | CMF55116G715R0F |
| A14R482 | 321-0182-00 | | | RES.,FXD,FILM:768 OHM,1%,0.125W | 91637 | CMF55116G768R0F |
| A14R483 | 317-0390-00 | | | RES.,FXD,CMPSN:39 OHM,5%,0.125W | 01121 | BB3905 |
| A14R484 | 315-0510-00 | | | RES.,FXD,CMPSN:51 OHM,5%,0.25W | 57668 | NTR25J-E51E0 |
| A14R485 | 311-1936-00 | | | RES.,VAR,NONWIR:CKT BD,50 OHM,20%,0.5W | 73138 | 72XR50-232A |
| A14R486 | 321-0101-00 | | | RES.,FXD,FILM:110 OHM,1%,0.125W | 91637 | CMF55116G110R0F |
| A14R490 | 311-1237-00 | | | RES.,VAR,NONWIR:1K OHM,10%,0.50W | 32997 | 3386X-T07-102 |
| A14R491 | 321-0179-00 | | | RES.,FXD,FILM:715 OHM,1%,0.125W | 91637 | CMF55116G715R0F |
| A14R492 | 321-0182-00 | | | RES.,FXD,FILM:768 OHM,1%,0.125W | 91637 | CMF55116G768R0F |
| A14R493 | 317-0390-00 | | | RES.,FXD,CMPSN:39 OHM,5%,0.125W | 01121 | BB3905 |
| A14R494 | 315-0510-00 | | | RES.,FXD,CMPSN:51 OHM,5%,0.25W | 57668 | NTR25J-E51E0 |
| A14R495 | 322-0145-00 | | | RES.,FXD,FILM:316 OHM,1%,0.25W | 75042 | CEBT0-3160F |
| A14R496 | 321-0101-00 | | | RES.,FXD,FILM:110 OHM,1%,0.125W | 91637 | CMF55116G110R0F |
| A14R497 | 322-0175-00 | | | RES.,FXD,FILM:649 OHM,1%,0.25W | 75042 | CEBT0-6490F |
| A14R498 | 321-0143-00 | | | RES.,FXD,FILM:301 OHM,1%,0.125W | 91637 | CMF55116G301R0F |
| A14R499 | 315-0510-00 | | | RES.,FXD,CMPSN:51 OHM,5%,0.25W | 57668 | NTR25J-E51E0 |
| A14U202 | 156-0730-02 | | | MICROCIRCUIT,DI:QUAD 2-INP NOR BFR,BURN-IN | 01295 | SN74LS33 |
| A14U232 | 155-0173-00 | | | MICROCIRCUIT,LI:VERTICAL CHANNEL SWITCH | 80009 | 155-0173-00 |
| A14U252 | 156-0158-00 | | | MICROCIRCUIT,LI:DUAL OPERATIONAL AMPLIFIER | 18324 | MC1458N |
| A14U274 | 155-0175-00 | | | MICROCIRCUIT,LI:TRIGGER AMPLIFIER | 80009 | 155-0175-00 |
| A14U492 | 155-0175-00 | | | MICROCIRCUIT,LI:TRIGGER AMPLIFIER | 80009 | 155-0175-00 |
| A14VR237 | 153-0067-00 | | | SEMICOND DVC SE:ZENER,PAIR | 80009 | 153-0067-00 |
| A14VR247 | 153-0067-00 | | | SEMICOND DVC SE:ZENER,PAIR | 80009 | 153-0067-00 |



http://manoman.sqhill.com

| Component No. | Tektronix Part No. | Serial/Model No. Eff | Dscont | Name & Description | Mfr Code | Mfr Part Number |
|---|---|---|---|---|---|---|
| A15 | 670-1885-11 | | | CKT BOARD ASSY:READOUT | 80009 | 670-1885-11 |
| A15C3401 | 283-0000-00 | | | CAP.,FXD,CER DI:0.001UF,+100-0%,500V | 59660 | 831610Y5U0102P |
| A15C3407 | 283-0597-00 | | | CAP.,FXD,MICA D:470PF,10%,300V | 00853 | D155F471K0 |
| A15C3418 | 283-0004-00 | | | CAP.,FXD,CER DI:0.02UF,+80-20%,150V | 59821 | SDDH69J203Z |
| A15C3420 | 283-0597-00 | | | CAP.,FXD,MICA D:470PF,10%,300V | 00853 | D155F471K0 |
| A15C3429 | 283-0004-00 | | | CAP.,FXD,CER DI:0.02UF,+80-20%,150V | 59821 | SDDH69J203Z |
| A15C3434 | 285-0698-00 | | | CAP.,FXD,PLSTC:0.0082UF,5%,100V | 84411 | TEK44-82251 |
| A15C3438 | 281-0612-00 | | | CAP.,FXD,CER DI:5.6PF,+/-0.5PF,500V | 59660 | 374-018-COH0569D |
| A15C3443 | 283-0103-00 | | | CAP.,FXD,CER DI:180PF,5%,500V | 59660 | 831-518-Z5D0181J |
| A15C3445 | 283-0103-00 | | | CAP.,FXD,CER DI:180PF,5%,500V | 59660 | 831-518-Z5D0181J |
| A15C3449 | 283-0000-00 | | | CAP.,FXD,CER DI:0.001UF,+100-0%,500V | 59660 | 831610Y5U0102P |
| A15C3470 | 290-0974-00 | | | CAP.,FXD,ELCTLT:10UF,20%,50VDC | 55680 | ULB1H100MEA |
| A15C3471 | 290-0920-00 | | | CAP.,FXD,ELCTLT:33UF,+50-10%,35V | 55680 | ULB1V330TEAANA |
| A15C3472 | 290-0974-00 | | | CAP.,FXD,ELCTLT:10UF,20%,50VDC | 55680 | ULB1H100MEA |
| A15C3475 | 283-0000-00 | | | CAP.,FXD,CER DI:0.001UF,+100-0%,500V | 59660 | 831610Y5U0102P |
| A15C3485 | 283-0251-00 | | | CAP.,FXD,CER DI:87 PF,5%,100V | 72982 | 8121B145C0G0870J |
| A15C3495 | 283-0054-00 | | | CAP.,FXD,CER DI:150PF,5%,200V | 59660 | 855-535U2J0 151J |
| A15CR3416 | 152-0141-02 | | | SEMICOND DVC,DI:SW,SI,30V,150MA,30V,DO-35 | 12969 | NDP0263 (1N4152) |
| A15CR3431 | 152-0141-02 | | | SEMICOND DVC,DI:SW,SI,30V,150MA,30V,DO-35 | 12969 | NDP0263 (1N4152) |
| A15CR3432 | 152-0141-02 | | | SEMICOND DVC,DI:SW,SI,30V,150MA,30V,DO-35 | 12969 | NDP0263 (1N4152) |
| A15CR3433 | 152-0141-02 | | | SEMICOND DVC,DI:SW,SI,30V,150MA,30V,DO-35 | 12969 | NDP0263 (1N4152) |
| A15CR3438 | 152-0141-02 | | | SEMICOND DVC,DI:SW,SI,30V,150MA,30V,DO-35 | 12969 | NDP0263 (1N4152) |
| A15CR3439 | 152-0141-02 | | | SEMICOND DVC,DI:SW,SI,30V,150MA,30V,DO-35 | 12969 | NDP0263 (1N4152) |
| A15CR3441 | 152-0141-02 | | | SEMICOND DVC,DI:SW,SI,30V,150MA,30V,DO-35 | 12969 | NDP0263 (1N4152) |
| A15CR3442 | 152-0141-02 | | | SEMICOND DVC,DI:SW,SI,30V,150MA,30V,DO-35 | 12969 | NDP0263 (1N4152) |
| A15CR3443 | 152-0141-02 | | | SEMICOND DVC,DI:SW,SI,30V,150MA,30V,DO-35 | 12969 | NDP0263 (1N4152) |
| A15CR3445 | 152-0141-02 | | | SEMICOND DVC,DI:SW,SI,30V,150MA,30V,DO-35 | 12969 | NDP0263 (1N4152) |
| A15CR3447 | 152-0141-02 | | | SEMICOND DVC,DI:SW,SI,30V,150MA,30V,DO-35 | 12969 | NDP0263 (1N4152) |
| A15J34L0 | 131-0608-00 | | | TERMINAL,PIN:0.365 L X 0.025 PH BRZ GOLD | 22526 | 48283-036 |
| A15J34L0 | — — | | | (QUANTITY OF 4) | | |
| A15J34T0 | 131-0608-00 | | | TERMINAL,PIN:0.365 L X 0.025 PH BRZ GOLD | 22526 | 48283-036 |
| A15J34T0 | — — | | | (QUANTITY OF 10) | | |
| A15J34S0 | 131-0608-00 | | | TERMINAL,PIN:0.365 L X 0.025 PH BRZ GOLD | 22526 | 48283-036 |
| A15J34S0 | — — | | | (QUANTITY OF 10) | | |
| A15J3401 | 131-1003-00 | | | CONN,RCPT,ELEC:CKT BD MT,3 PRONG | 80009 | 131-1003-00 |
| A15J3402 | 131-1003-00 | | | CONN,RCPT,ELEC:CKT BD MT,3 PRONG | 80009 | 131-1003-00 |
| A15J3403 | 131-1003-00 | | | CONN,RCPT,ELEC:CKT BD MT,3 PRONG | 80009 | 131-1003-00 |
| A15J3404 | 131-1003-00 | | | CONN,RCPT,ELEC:CKT BD MT,3 PRONG | 80009 | 131-1003-00 |
| A15J3405 | 131-1003-00 | | | CONN,RCPT,ELEC:CKT BD MT,3 PRONG | 80009 | 131-1003-00 |
| A15L3482 | 108-0331-00 | | | COIL,RF:0.75UH | 80009 | 108-0331-00 |
| A15Q3406 | 151-0232-00 | | | TRANSISTOR:SILICON,NPN,DUAL | 07263 | SP12141 |
| A15Q3411 | 151-0223-00 | | | TRANSISTOR:NPN,SI,TO-92 | 04713 | SPS8026 |
| A15Q3414 | 151-0223-00 | | | TRANSISTOR:NPN,SI,TO-92 | 04713 | SPS8026 |
| A15Q3416 | 151-0220-00 | | | TRANSISTOR:PNP,SI,TO-92 | 07263 | S036228 |
| A15Q3419 | 151-0223-00 | | | TRANSISTOR:NPN,SI,TO-92 | 04713 | SPS8026 |
| A15Q3427 | 151-0192-00 | | | TRANSISTOR:SELECTED | 04713 | SPS8801 |
| A15Q3442 | 151-0220-00 | | | TRANSISTOR:PNP,SI,TO-92 | 07263 | S036228 |
| A15Q3445 | 151-0223-00 | | | TRANSISTOR:NPN,SI,TO-92 | 04713 | SPS8026 |
| A15Q3486 | 151-0220-00 | | | TRANSISTOR:PNP,SI,TO-92 | 07263 | S036228 |
| A15Q3489 | 151-0220-00 | | | TRANSISTOR:PNP,SI,TO-92 | 07263 | S036228 |
| A15Q3493 | 151-0220-00 | | | TRANSISTOR:PNP,SI,TO-92 | 07263 | S036228 |
| A15Q3499 | 151-0220-00 | | | TRANSISTOR:PNP,SI,TO-92 | 07263 | S036228 |
| A15R3401 | 315-0303-00 | | | RES.,FXD,CMPSN:30K OHM,5%,0.25W | 57668 | NTR25J-E 30K |



http://manoman.sqhill.com

| Component No. | Tektronix Part No. | Serial/Model No. Eff | Dscont | Name & Description | Mfr Code | Mfr Part Number |
|---|---|---|---|---|---|---|
| A15R3402 | 315-0203-00 | | | RES.,FXD,CMPSN:20K OHM,5%,0.25W | 57668 | NTR25J-E20K0 |
| A15R3403 | 315-0203-00 | | | RES.,FXD,CMPSN:20K OHM,5%,0.25W | 57668 | NTR25J-E20K0 |
| A15R3404 | 315-0203-00 | | | RES.,FXD,CMPSN:20K OHM,5%,0.25W | 57668 | NTR25J-E20K0 |
| A15R3405 | 315-0203-00 | | | RES.,FXD,CMPSN:20K OHM,5%,0.25W | 57668 | NTR25J-E20K0 |
| A15R3406 | 315-0124-00 | | | RES.,FXD,CMPSN:120K OHM,5%,0.25W | 57668 | NTR25J-E 120K |
| A15R3407 | 311-1224-00 | | | RES.,VAR,NONWIR:500 OHM,20%,0.50W | 32997 | 3386F-T04-501 |
| A15R3408 | 321-0300-00 | | | RES.,FXD,FILM:13K OHM,1%,0.125W | 91637 | MFF1816G13001F |
| A15R3409 | 321-0259-00 | | | RES.,FXD,FILM:4.87K OHM,1%,0.125W | 91637 | MFF1816G48700F |
| A15R3410 | 321-0181-00 | | | RES.,FXD,FILM:750 OHM,1%,0.125W | 91637 | CMF55116G750R0F |
| A15R3411 | 321-0297-00 | | | RES.,FXD,FILM:12.1K OHM,1%,0.125W | 91637 | MFF1816G12101F |
| A15R3412 | 321-0212-00 | | | RES.,FXD,FILM:1.58K OHM,1%,0.125W | 91637 | MFF1816G15800F |
| A15R3414 | 315-0152-00 | | | RES.,FXD,CMPSN:1.5K OHM,5%,0.25W | 57668 | NTR25J-E01K5 |
| A15R3416 | 315-0222-00 | | | RES.,FXD,CMPSN:2.2K OHM,5%,0.25W | 57668 | NTR25J-E02K2 |
| A15R3418 | 321-0268-00 | | | RES.,FXD,FILM:6.04K OHM,1%,0.125W | 91637 | CMF55116G60400F |
| A15R3419 | 321-0322-00 | | | RES.,FXD,FILM:22.1K OHM,1%,0.125W | 91637 | MFF1816G22101F |
| A15R3420 | 321-0262-00 | | | RES.,FXD,FILM:5.23K OHM,1%,0.125W | 91637 | MFF1816G52300F |
| A15R3422 | 311-1224-00 | | | RES.,VAR,NONWIR:500 OHM,20%,0.50W | 32997 | 3386F-T04-501 |
| A15R3423 | 321-0372-00 | | | RES.,FXD,FILM:73.2K OHM,1%,0.125W | 91637 | MFF1816G73201F |
| A15R3425 | 321-0403-00 | | | RES.,FXD,FILM:154K OHM,1%,0.125W | 91637 | MFF1816G15402F |
| A15R3427 | 315-0472-00 | | | RES.,FXD,CMPSN:4.7K OHM,5%,0.25W | 57668 | NTR25J-E04K7 |
| A15R3430 | 315-0432-00 | | | RES.,FXD,CMPSN:4.3K OHM,5%,0.25W | 57668 | NTR25J-E04K3 |
| A15R3431 | 315-0683-00 | | | RES.,FXD,CMPSN:68K OHM,5%,0.25W | 57668 | NTR25J-E68K0 |
| A15R3432 | 315-0153-00 | | | RES.,FXD,CMPSN:15K OHM,5%,0.25W | 57668 | NTR25J-E 15K |
| A15R3433 | 315-0302-00 | | | RES.,FXD,CMPSN:3K OHM,5%,0.25W | 57668 | NTR25J-E03K0 |
| A15R3434 | 315-0393-00 | | | RES.,FXD,CMPSN:39K OHM,5%,0.25W | 57668 | NTR25J-E39K0 |
| A15R3435 | 315-0103-00 | | | RES.,FXD,CMPSN:10K OHM,5%,0.25W | 57668 | NTR25J-E10K0 |
| A15R3436 | 315-0183-00 | | | RES.,FXD,CMPSN:18K OHM,5%,0.25W | 57668 | NTR25J-E 18K |
| A15R3437 | 311-1225-00 | | | RES.,VAR,NONWIR:1K OHM,20%,0.50W | 32997 | 3386F-T04-102 |
| A15R3438 | 315-0104-00 | | | RES.,FXD,CMPSN:100K OHM,5%,0.25W | 57668 | NTR25J-E100K |
| A15R3439 | 315-0152-00 | | | RES.,FXD,CMPSN:1.5K OHM,5%,0.25W | 57668 | NTR25J-E01K5 |
| A15R3440 | 315-0510-00 | | | RES.,FXD,CMPSN:51 OHM,5%,0.25W | 57668 | NTR25J-E51E0 |
| A15R3441 | 315-0752-00 | | | RES.,FXD,CMPSN:7.5K OHM,5%,0.25W | 57668 | NTR25J-E07K5 |
| A15R3442 | 315-0242-00 | | | RES.,FXD,CMPSN:2.4K OHM,5%,0.25W | 57668 | NTR25J-E02K4 |
| A15R3445 | 315-0152-00 | | | RES.,FXD,CMPSN:1.5K OHM,5%,0.25W | 57668 | NTR25J-E01K5 |
| A15R3449 | 315-0512-00 | | | RES.,FXD,CMPSN:5.1K OHM,5%,0.25W | 57668 | NTR25J-E05K1 |
| A15R3450 | 315-0102-00 | | | RES.,FXD,CMPSN:1K OHM,5%,0.25W | 57668 | NTR25JE01K0 |
| A15R3451 | 315-0102-00 | | | RES.,FXD,CMPSN:1K OHM,5%,0.25W | 57668 | NTR25JE01K0 |
| A15R3452 | 315-0102-00 | | | RES.,FXD,CMPSN:1K OHM,5%,0.25W | 57668 | NTR25JE01K0 |
| A15R3466 | 321-0153-00 | | | RES.,FXD,FILM:383 OHM,1%,0.125W | 91637 | CMF55116G383R0F |
| A15R3468 | 321-0641-00 | | | RES.,FXD,FILM:1.8K OHM,1%,0.125W | 91637 | MFF1816G18000F |
| A15R3470 | 315-0102-00 | | | RES.,FXD,CMPSN:1K OHM,5%,0.25W | 57668 | NTR25JE01K0 |
| A15R3472 | 315-0272-00 | | | RES.,FXD,CMPSN:2.7K OHM,5%,0.25W | 57668 | NTR25J-E02K7 |
| A15R3473 | 315-0512-00 | | | RES.,FXD,CMPSN:5.1K OHM,5%,0.25W | 57668 | NTR25J-E05K1 |
| A15R3474 | 315-0303-00 | | | RES.,FXD,CMPSN:30K OHM,5%,0.25W | 57668 | NTR25J-E 30K |
| A15R3475 | 315-0912-00 | | | RES.,FXD,CMPSN:9.1K OHM,5%,0.25W | 57668 | NTR25J-E09K1 |
| A15R3476 | 321-0297-00 | | | RES.,FXD,FILM:12.1K OHM,1%,0.125W | 91637 | MFF1816G12101F |
| A15R3476 | 321-0294-00 | B030260 | | RES.,FXD,FILM:11.3K OHM,1%,0.125W | 91637 | CMF55116G11301F |
| A15R3476 | 321-0295-00 | B030260 | | RES.,FXD,FILM:11.5K OHM,1%,0.125W | 91637 | MFF1816G11501F |
| A15R3476 | 321-0296-00 | B030260 | | RES.,FXD,FILM:11.8K OHM,1%,0.125W | 91637 | MFF1816G11801F |
| A15R3476 | 321-0298-00 | B030260 | | RES.,FXD,FILM:12.4K OHM,1%,0.125W | 91637 | MFF1816G12401F |
| A15R3476 | 321-0299-00 | B030260 | | RES.,FXD,FILM:12.7K OHM,1%,0.125W | 91637 | MFF1816G12701F |
| A15R3476 | 321-0631-00 | B030260 | | RES.,FXD,FILM:12.5K OHM,1%,0.125W | 91637 | MFF1816G12501F |
| A15R3476 | —— —— | | | (SELECTED) | | |
| A15R3477 | 315-0823-00 | | | RES.,FXD,CMPSN:82K OHM,5%,0.25W | 57668 | NTR25J-E82K |



http://manoman.sqhill.com

| Component No. | Tektronix Part No. | Serial/Model No. Eff | Dscont | Name & Description | Mfr Code | Mfr Part Number |
|---|---|---|---|---|---|---|
| A15R3478 | 315-0753-00 | | | RES.,FXD,CMPSN:75K OHM,5%,0.25W | 57668 | NTR25J-E75K0 |
| A15R3479 | 315-0823-00 | | | RES.,FXD,CMPSN:82K OHM,5%,0.25W | 57668 | NTR25J-E82K |
| A15R3480 | 321-0222-00 | | | RES.,FXD,FILM:2K OHM,1%,0.125W | 91637 | MFF1816G20000F |
| A15R3481 | 315-0223-00 | | | RES.,FXD,CMPSN:22K OHM,5%,0.25W | 57668 | NTR25J-E 22K |
| A15R3482 | 321-0250-00 | | | RES.,FXD,FILM:3.92K OHM,1%,0.125W | 91637 | MFF1816G39200F |
| A15R3483 | 315-0332-00 | | | RES.,FXD,CMPSN:3.3K OHM,5%,0.25W | 57668 | NTR25J-E03K3 |
| A15R3484 | 321-0216-00 | | | RES.,FXD,FILM:1.74K OHM,1%,0.125W | 91637 | MFF1816G17400F |
| A15R3485 | 321-0245-00 | | | RES.,FXD,FILM:3.48K OHM,1%,0.125W | 91637 | MFF1816G34800F |
| A15R3485 | 321-0242-00 | B030260 | | RES.,FXD,FILM:3.24K OHM,1%,0.125W | 24546 | CT55 3241 F |
| A15R3485 | 321-0243-00 | B030260 | | RES.,FXD,FILM:3.32K OHM,1%,0.125W | 91637 | MFF1816G33200F |
| A15R3485 | 321-0244-00 | B030260 | | RES.,FXD,FILM:3.4K OHM,1%,0.125W | 24546 | CT553401F |
| A15R3485 | 321-0246-00 | B030260 | | RES.,FXD,FILM:3.57K OHM,1%,0.125W | 91637 | CMF55116G35700F |
| A15R3485 | 321-0247-00 | B030260 | | RES.,FXD,FILM:3.65K OHM,1%,0.125W | 91637 | CMF55116G36500F |
| A15R3485 | 321-0248-00 | B030260 | | RES.,FXD,FILM:3.74K OHM,1%,0.125W | 91637 | CMF55116G37400F |
| A15R3485 | — — | | | (SELECTED) | | |
| A15R3486 | 321-0199-00 | | | RES.,FXD,FILM:1.15K OHM,1%,0.125W | 91637 | CMF55116G11500F |
| A15R3487 | 321-0273-00 | | | RES.,FXD,FILM:6.81K OHM,1%,0.125W | 91637 | MFF1816G68100F |
| A15R3488 | 321-0193-00 | | | RES.,FXD,FILM:1K OHM,1%,0.125W | 19701 | 5043ED1K00F |
| A15R3489 | 321-0209-00 | | | RES.,FXD,FILM:1.47K OHM,1%,0.125W | 91637 | MFF1816G14700F |
| A15R3491 | 321-0204-00 | | | RES.,FXD,FILM:1.3K OHM,1%,0.125W | 91637 | CMF55116G13000F |
| A15R3492 | 321-0245-00 | | | RES.,FXD,FILM:3.48K OHM,1%,0.125W | 91637 | MFF1816G34800F |
| A15R3493 | 315-0152-00 | | | RES.,FXD,CMPSN:1.5K OHM,5%,0.25W | 57668 | NTR25J-E01K5 |
| A15R3494 | 315-0511-00 | | | RES.,FXD,CMPSN:510 OHM,5%,0.25W | 57668 | NTR25J-E 510E |
| A15R3495 | 315-0101-00 | | | RES.,FXD,CMPSN:100 OHM,5%,0.25W | 57668 | NTR25J-E 100E |
| A15R3497 | 321-0241-00 | | | RES.,FXD,FILM:3.16K OHM,1%,0.125W | 91637 | MFF1816G31600F |
| A15R3498 | 321-0255-00 | | | RES.,FXD,FILM:4.42K OHM,1%,0.125W | 91637 | MFF1816G44200F |
| A15R3499 | 315-0152-00 | | | RES.,FXD,CMPSN:1.5K OHM,5%,0.25W | 57668 | NTR25J-E01K5 |
| A15TP3445 | 214-0579-00 | | | TERM,TEST POINT:BRS CD PL | 80009 | 214-0579-00 |
| A15TP3450 | 214-0579-00 | | | TERM,TEST POINT:BRS CD PL | 80009 | 214-0579-00 |
| A15U3401 | 155-0018-00 | | | MICROCIRCUIT,DI:ML,ZERO LOGIC | 80009 | 155-0018-00 |
| A15U3418 | 155-0014-01 | | | MICROCIRCUIT,DI:ML,ANALOG TO DECIMAL CONV | 80009 | 155-0014-01 |
| A15U3429 | 155-0014-01 | | | MICROCIRCUIT,DI:ML,ANALOG TO DECIMAL CONV | 80009 | 155-0014-01 |
| A15U3433 | 155-0021-01 | | | MICROCIRCUIT,DI:SCAN OSCILLATOR & LOGIC | 80009 | 155-0021-01 |
| A15U3445 | 155-0017-00 | | | MICROCIRCUIT,DI:ML,ZERO LOGIC COUNTER | 80009 | 155-0017-00 |
| A15U3450 | 156-0032-03 | | | MICROCIRCUIT,DI:4 BIT BINARY COUNTER,SCRN | 07263 | 7493(PCQR) |
| A15U3461 | 155-0023-00 | | | MICROCIRCUIT,DI:ML,CHAR GEN NUMERALS | 80009 | 155-0023-00 |
| A15U3463 | 155-0024-00 | | | MICROCIRCUIT,DI:ML,CHAR GEN SPCL SYMBOLS | 80009 | 155-0024-00 |
| A15U3465 | 155-0025-00 | | | MICROCIRCUIT,DI:ML,CHAR GEN PREFIXES | 80009 | 155-0025-00 |
| A15U3467 | 155-0026-00 | | | MICROCIRCUIT,DI:ML,CHAR GEN LETTERS | 80009 | 155-0026-00 |
| A15U3469 | 155-0027-00 | | | MICROCIRCUIT,DI:ML,CHAR GEN SPCL ALPHA | 80009 | 155-0027-00 |
| A15U3470 | 155-0019-00 | | | MICROCIRCUIT,DI:ML,DECIMAL POINT AND SPACE | 80009 | 155-0019-00 |
| A15U3480 | 155-0020-00 | | | MICROCIRCUIT,DI:ML,CHANNEL SW OUTPUT ASSY | 80009 | 155-0020-00 |
| A15VR3470 | 152-0405-00 | | | SEMICOND DEVICE:ZENER,1W,15V,5% | 14433 | Z6041 |
| A15VR3471 | 152-0405-00 | | | SEMICOND DEVICE:ZENER,1W,15V,5% | 14433 | Z6041 |
| A15VR3472 | 152-0405-00 | | | SEMICOND DEVICE:ZENER,1W,15V,5% | 14433 | Z6041 |



http://manoman.sqhill.com

| Component No. | Tektronix Part No. | Serial/Model No. Eff | Dscont | Name & Description | Mfr Code | Mfr Part Number |
|---|---|---|---|---|---|---|
| A16 | 670-4769-02 | | | CKT BOARD ASSY:VERTICAL CHANNEL SWITCH | 80009 | 670-4769-02 |
| A16C505 | 281-0811-00 | | | CAP.,FXD,CER DI:10PF,10%,100V | 96733 | R2911 |
| A16C508 | 281-0775-00 | | | CAP.,FXD,CER DI:0.1UF,20%,50V | 04222 | MA205E104MAA |
| A16C512 | 285-0650-00 | | | CAP.,FXD,PLSTC:0.027UF,5%,100V | 56289 | 192P27352M447 |
| A16C515 | 285-0643-00 | | | CAP.,FXD,PLSTC:0.0047UF,5%,100V | 84411 | TEK-180 47251 |
| A16C520 | 283-0666-00 | | | CAP.,FXD,MICA D:890PF,2%,100V | 00853 | D151F891G0 |
| A16C525 | 283-0649-00 | | | CAP.,FXD,MICA D:105PF,1%,300V | 00853 | D155F1050F0 |
| A16C531 | 285-0598-00 | | | CAP.,FXD,PLSTC:0.01UF,5%,100V | 19396 | DU490B103J |
| A16C538 | 281-0204-00 | | | CAP.,VAR,PLSTC:2-22PF,100V | 80031 | 2807C00222MJ02 |
| A16C539 | 281-0775-00 | | | CAP.,FXD,CER DI:0.1UF,20%,50V | 04222 | MA205E104MAA |
| A16C582 | 290-0745-00 | | | CAP.,FXD,ELCTLT:22UF,+50-10%,25V | 54473 | ECE-A25V22L |
| A16C583 | 290-0745-00 | | | CAP.,FXD,ELCTLT:22UF,+50-10%,25V | 54473 | ECE-A25V22L |
| A16C584 | 290-0745-00 | | | CAP.,FXD,ELCTLT:22UF,+50-10%,25V | 54473 | ECE-A25V22L |
| A16C605 | 281-0811-00 | | | CAP.,FXD,CER DI:10PF,10%,100V | 96733 | R2911 |
| A16C608 | 281-0775-00 | | | CAP.,FXD,CER DI:0.1UF,20%,50V | 04222 | MA205E104MAA |
| A16C612 | 285-0650-00 | | | CAP.,FXD,PLSTC:0.027UF,5%,100V | 56289 | 192P27352M447 |
| A16C615 | 285-0643-00 | | | CAP.,FXD,PLSTC:0.0047UF,5%,100V | 84411 | TEK-180 47251 |
| A16C620 | 283-0666-00 | | | CAP.,FXD,MICA D:890PF,2%,100V | 00853 | D151F891G0 |
| A16C625 | 283-0649-00 | | | CAP.,FXD,MICA D:105PF,1%,300V | 00853 | D155F1050F0 |
| A16C631 | 285-0598-00 | | | CAP.,FXD,PLSTC:0.01UF,5%,100V | 19396 | DU490B103J |
| A16C638 | 281-0204-00 | | | CAP.,VAR,PLSTC:2-22PF,100V | 80031 | 2807C00222MJ02 |
| A16C639 | 281-0775-00 | | | CAP.,FXD,CER DI:0.1UF,20%,50V | 04222 | MA205E104MAA |
| A16C675 | 281-0775-00 | | | CAP.,FXD,CER DI:0.1UF,20%,50V | 04222 | MA205E104MAA |
| A16C681 | 281-0788-00 | | | CAP.,FXD,CER DI:470PF,10%,100V | 96733 | R3015 |
| A16C695 | 290-0746-00 | | | CAP.,FXD,ELCTLT:47UF,+50-10%,16V | 55680 | ULA1C470TEA |
| A16CR552 | 152-0141-02 | | | SEMICOND DVC,DI:SW,SI,30V,150MA,30V,DO-35 | 12969 | NDP0263 (1N4152) |
| A16CR651 | 152-0141-02 | | | SEMICOND DVC,DI:SW,SI,30V,150MA,30V,DO-35 | 12969 | NDP0263 (1N4152) |
| A16CR654 | 152-0141-02 | | | SEMICOND DVC,DI:SW,SI,30V,150MA,30V,DO-35 | 12969 | NDP0263 (1N4152) |
| A16J502 | 131-2020-00 | | | CONTACT,ELEC:DUAL,TOP,BERYLLIUM COPPER | 80009 | 131-2020-00 |
| A16J502 | 131-2022-00 | | | CONTACT,ELEC:DUAL,BOTTOM,CU BE | 80009 | 131-2022-00 |
| A16J503 | — — | | | (PART OF J502) | | |
| A16J592 | 131-2032-00 | | | CONTACT,ELEC:SINGLE,TOP,CU BE | 80009 | 131-2032-00 |
| A16J592 | 131-2033-00 | | | CONTACT,ELEC:SINGLE,BOTTOM,CU BE | 80009 | 131-2033-00 |
| A16J602 | 131-2020-00 | | | CONTACT,ELEC:DUAL,TOP,BERYLLIUM COPPER | 80009 | 131-2020-00 |
| A16J602 | 131-2022-00 | | | CONTACT,ELEC:DUAL,BOTTOM,CU BE | 80009 | 131-2022-00 |
| A16J603 | — — | | | (PART OF J602) | | |
| A16J694 | 131-2032-00 | | | CONTACT,ELEC:SINGLE,TOP,CU BE | 80009 | 131-2032-00 |
| A16J694 | 131-2033-00 | | | CONTACT,ELEC:SINGLE,BOTTOM,CU BE | 80009 | 131-2033-00 |
| A16L582 | 108-0538-00 | | | COIL,RF:FIXED,2.7UH | 76493 | JWM#B7059 |
| A16L583 | 108-0538-00 | | | COIL,RF:FIXED,2.7UH | 76493 | JWM#B7059 |
| A16L584 | 108-0538-00 | | | COIL,RF:FIXED,2.7UH | 76493 | JWM#B7059 |
| A16Q542 | 151-0302-00 | | | TRANSISTOR:SILICON,NPN | 07263 | S038487 |
| A16Q548 | 151-0302-00 | | | TRANSISTOR:SILICON,NPN | 07263 | S038487 |
| A16Q556 | 151-0302-00 | | | TRANSISTOR:SILICON,NPN | 07263 | S038487 |
| A16Q558 | 151-0302-00 | | | TRANSISTOR:SILICON,NPN | 07263 | S038487 |
| A16Q642 | 151-0302-00 | | | TRANSISTOR:SILICON,NPN | 07263 | S038487 |
| A16Q648 | 151-0302-00 | | | TRANSISTOR:SILICON,NPN | 07263 | S038487 |
| A16Q652 | 151-0301-00 | | | TRANSISTOR:SILICON,PNP | 27014 | 2N2907A |
| A16Q656 | 151-0302-00 | | | TRANSISTOR:SILICON,NPN | 07263 | S038487 |
| A16Q658 | 151-0302-00 | | | TRANSISTOR:SILICON,NPN | 07263 | S038487 |
| A16Q672 | 151-0301-00 | | | TRANSISTOR:SILICON,PNP | 27014 | 2N2907A |
| A16Q676 | 151-0134-00 | | | TRANSISTOR:SILICON,PNP | 80009 | 151-0134-00 |
| A16Q682 | 151-0301-00 | | | TRANSISTOR:SILICON,PNP | 27014 | 2N2907A |



http://manoman.sqhill.com

| Component No. | Tektronix Part No. | Serial/Model No. Eff | Dscont | Name & Description | Mfr Code | Mfr Part Number |
|---|---|---|---|---|---|---|
| A16R501 | 321-0289-00 | | | RES.,FXD,FILM:10K OHM,1%,0.125W | 91637 | MFF1816G10001F |
| A16R502 | 321-0289-00 | | | RES.,FXD,FILM:10K OHM,1%,0.125W | 91637 | MFF1816G10001F |
| A16R504 | 321-0335-00 | | | RES.,FXD,FILM:30.1K OHM,1%,0.125W | 91637 | CMF55116G30101F |
| A16R505 | 321-0335-00 | | | RES.,FXD,FILM:30.1K OHM,1%,0.125W | 91637 | CMF55116G30101F |
| A16R511 | 321-0414-00 | | | RES.,FXD,FILM:200K OHM,1%,0.125W | 91637 | MFF1816G20002F |
| A16R512 | 311-1214-00 | | | RES.,VAR,NONWIR:200K OHM,20%,0.50W | 73138 | 72-16-0 |
| A16R513 | 321-0318-00 | | | RES.,FXD,FILM:20K OHM,1%,0.125W | 91637 | MFF1816G20001F |
| A16R514 | 321-0385-00 | | | RES.,FXD,FILM:100K OHM,1%,0.125W | 91637 | MFF1816G10002F |
| A16R515 | 311-1235-00 | | | RES.,VAR,NONWIR:100K OHM,20%,0.50W | 32997 | 3386F-T04-104 |
| A16R516 | 321-0309-00 | | | RES.,FXD,FILM:16.2K OHM,1%,0.125W,TC=TO | 91637 | CMF55116G16201F |
| A16R519 | 321-0385-00 | | | RES.,FXD,FILM:100K OHM,1%,0.125W | 91637 | MFF1816G10002F |
| A16R520 | 311-1232-00 | | | RES.,VAR,NONWIR:50K OHM,20%,0.50W | 32997 | 3386F-T04-503 |
| A16R521 | 321-0281-00 | | | RES.,FXD,FILM:8.25K OHM,1%,0.125W | 91637 | CMF55116G82500F |
| A16R524 | 321-0357-00 | | | RES.,FXD,FILM:51.1K OHM,1%,0.125W | 91637 | MFF1816G51101F |
| A16R525 | 311-1230-00 | | | RES.,VAR,NONWIR:20K OHM,20%,0.50W | 32997 | 3386F-T04-203 |
| A16R526 | 321-0314-00 | | | RES.,FXD,FILM:18.2K OHM,1%,0.125W | 91637 | CMF55116G18201F |
| A16R529 | 321-0326-00 | | | RES.,FXD,FILM:24.3K OHM,1%,0.125W | 91637 | CMF55116G24301F |
| A16R530 | 311-1230-00 | | | RES.,VAR,NONWIR:20K OHM,20%,0.50W | 32997 | 3386F-T04-203 |
| A16R531 | 321-0450-00 | | | RES.,FXD,FILM:475K OHM,1%,0.125W | 91637 | CMF55116G47502F |
| A16R532 | 321-0450-00 | | | RES.,FXD,FILM:475K OHM,1%,0.125W | 91637 | CMF55116G47502F |
| A16R535 | 311-1235-00 | | | RES.,VAR,NONWIR:100K OHM,20%,0.50W | 32997 | 3386F-T04-104 |
| A16R536 | 315-0104-00 | | | RES.,FXD,CMPSN:100K OHM,5%,0.25W | 57668 | NTR25J-E100K |
| A16R537 | 315-0244-00 | | | RES.,FXD,CMPSN:240K OHM,5%,0.25W | 57668 | NTR25J-E 240K |
| A16R538 | 321-0326-00 | | | RES.,FXD,FILM:24.3K OHM,1%,0.125W | 91637 | CMF55116G24301F |
| A16R542 | 323-0168-00 | | | RES.,FXD,FILM:549 OHM,1%,0.50W | 24546 | NA65 5490F |
| A16R543 | 321-0065-00 | | | RES.,FXD,FILM:46.4 OHM,1%,0.125W | 57668 | RB14FXE 46E4 |
| A16R547 | 321-0084-00 | | | RES.,FXD,FILM:73.2 OHM,1%,0.125W | 91637 | CMF55116G73R20F |
| A16R548 | 323-0168-00 | | | RES.,FXD,FILM:549 OHM,1%,0.50W | 24546 | NA65 5490F |
| A16R549 | 321-0010-00 | | | RES.,FXD,FILM:12.4 OHM,1%,0.125W | 91637 | MFF1816G12R40F |
| A16R550 | 323-0136-00 | | | RES.,FXD,FILM:255 OHM,1%,0.50W | 91637 | MFF1226G255ROF |
| A16R552 | 315-0512-00 | | | RES.,FXD,CMPSN:5.1K OHM,5%,0.25W | 57668 | NTR25J-E05K1 |
| A16R555 | 315-0102-00 | | | RES.,FXD,CMPSN:1K OHM,5%,0.25W | 57668 | NTR25JE01K0 |
| A16R556 | 321-0126-00 | | | RES.,FXD,FILM:200 OHM,1%,0.125W | 91637 | CMF55116G200R0F |
| A16R557 | 321-0237-00 | | | RES.,FXD,FILM:2.87K OHM,1%,0.125W | 91637 | MFF1816G28700F |
| A16R558 | 321-0126-00 | | | RES.,FXD,FILM:200 OHM,1%,0.125W | 91637 | CMF55116G200R0F |
| A16R559 | 317-0103-00 | | | RES.,FXD,CMPSN:10K OHM,5%,0.125W | 01121 | BB1035 |
| A16R601 | 321-0289-00 | | | RES.,FXD,FILM:10K OHM,1%,0.125W | 91637 | MFF1816G10001F |
| A16R602 | 321-0289-00 | | | RES.,FXD,FILM:10K OHM,1%,0.125W | 91637 | MFF1816G10001F |
| A16R604 | 321-0335-00 | | | RES.,FXD,FILM:30.1K OHM,1%,0.125W | 91637 | CMF55116G30101F |
| A16R605 | 321-0335-00 | | | RES.,FXD,FILM:30.1K OHM,1%,0.125W | 91637 | CMF55116G30101F |
| A16R611 | 321-0414-00 | | | RES.,FXD,FILM:200K OHM,1%,0.125W | 91637 | MFF1816G20002F |
| A16R612 | 311-1214-00 | | | RES.,VAR,NONWIR:200K OHM,20%,0.50W | 73138 | 72-16-0 |
| A16R613 | 321-0318-00 | | | RES.,FXD,FILM:20K OHM,1%,0.125W | 91637 | MFF1816G20001F |
| A16R614 | 321-0385-00 | | | RES.,FXD,FILM:100K OHM,1%,0.125W | 91637 | MFF1816G10002F |
| A16R615 | 311-1235-00 | | | RES.,VAR,NONWIR:100K OHM,20%,0.50W | 32997 | 3386F-T04-104 |
| A16R616 | 321-0309-00 | | | RES.,FXD,FILM:16.2K OHM,1%,0.125W,TC=TO | 91637 | CMF55116G16201F |
| A16R619 | 321-0385-00 | | | RES.,FXD,FILM:100K OHM,1%,0.125W | 91637 | MFF1816G10002F |
| A16R620 | 311-1232-00 | | | RES.,VAR,NONWIR:50K OHM,20%,0.50W | 32997 | 3386F-T04-503 |
| A16R621 | 321-0281-00 | | | RES.,FXD,FILM:8.25K OHM,1%,0.125W | 91637 | CMF55116G82500F |
| A16R624 | 321-0357-00 | | | RES.,FXD,FILM:51.1K OHM,1%,0.125W | 91637 | MFF1816G51101F |
| A16R625 | 311-1230-00 | | | RES.,VAR,NONWIR:20K OHM,20%,0.50W | 32997 | 3386F-T04-203 |
| A16R626 | 321-0314-00 | | | RES.,FXD,FILM:18.2K OHM,1%,0.125W | 91637 | CMF55116G18201F |
| A16R629 | 321-0326-00 | | | RES.,FXD,FILM:24.3K OHM,1%,0.125W | 91637 | CMF55116G24301F |
| A16R630 | 311-1230-00 | | | RES.,VAR,NONWIR:20K OHM,20%,0.50W | 32997 | 3386F-T04-203 |



http://manoman.sqhill.com

| Component No. | Tektronix Part No. | Serial/Model No. Eff | Dscont | Name & Description | Mfr Code | Mfr Part Number |
|---|---|---|---|---|---|---|
| A16R631 | 321-0450-00 | | | RES.,FXD,FILM:475K OHM,1%,0.125W | 91637 | CMF55116G47502F |
| A16R632 | 321-0450-00 | | | RES.,FXD,FILM:475K OHM,1%,0.125W | 91637 | CMF55116G47502F |
| A16R638 | 321-0326-00 | | | RES.,FXD,FILM:24.3K OHM,1%,0.125W | 91637 | CMF55116G24301F |
| A16R642 | 323-0168-00 | | | RES.,FXD,FILM:549 OHM,1%,0.50W | 24546 | NA65 5490F |
| A16R643 | 321-0010-00 | | | RES.,FXD,FILM:12.4 OHM,1%,0.125W | 91637 | MFF1816G12R40F |
| A16R646 | 321-0080-00 | | | RES.,FXD,FILM:66.5 OHM,1%,0.125W | 91637 | CMF55116G66R50F |
| A16R647 | 321-0084-00 | | | RES.,FXD,FILM:73.2 OHM,1%,0.125W | 91637 | CMF55116G73R20F |
| A16R648 | 323-0168-00 | | | RES.,FXD,FILM:549 OHM,1%,0.50W | 24546 | NA65 5490F |
| A16R649 | 321-0065-00 | | | RES.,FXD,FILM:46.4 OHM,1%,0.125W | 57668 | RB14FXE 46E4 |
| A16R650 | 323-0136-00 | | | RES.,FXD,FILM:255 OHM,1%,0.50W | 91637 | MFF1226G255ROF |
| A16R651 | 315-0471-00 | | | RES.,FXD,CMPSN:470 OHM,5%,0.25W | 57668 | NTR25J-E470E |
| A16R652 | 315-0153-00 | | | RES.,FXD,CMPSN:15K OHM,5%,0.25W | 57668 | NTR25J-E 15K |
| A16R653 | 315-0472-00 | | | RES.,FXD,CMPSN:4.7K OHM,5%,0.25W | 57668 | NTR25J-E04K7 |
| A16R654 | 315-0512-00 | | | RES.,FXD,CMPSN:5.1K OHM,5%,0.25W | 57668 | NTR25J-E05K1 |
| A16R655 | 315-0102-00 | | | RES.,FXD,CMPSN:1K OHM,5%,0.25W | 57668 | NTR25JE01K0 |
| A16R656 | 321-0126-00 | | | RES.,FXD,FILM:200 OHM,1%,0.125W | 91637 | CMF55116G200R0F |
| A16R657 | 321-0237-00 | | | RES.,FXD,FILM:2.87K OHM,1%,0.125W | 91637 | MFF1816G28700F |
| A16R658 | 321-0126-00 | | | RES.,FXD,FILM:200 OHM,1%,0.125W | 91637 | CMF55116G200R0F |
| A16R659 | 317-0103-00 | | | RES.,FXD,CMPSN:10K OHM,5%,0.125W | 01121 | BB1035 |
| A16R671 | 321-0246-00 | | | RES.,FXD,FILM:3.57K OHM,1%,0.125W | 91637 | CMF55116G35700F |
| A16R672 | 321-0309-00 | | | RES.,FXD,FILM:16.2K OHM,1%,0.125W,TC=TO | 91637 | CMF55116G16201F |
| A16R675 | 315-0272-00 | | | RES.,FXD,CMPSN:2.7K OHM,5%,0.25W | 57668 | NTR25J-E02K7 |
| A16R680 | 321-0284-00 | | | RES.,FXD,FILM:8.87K OHM,1%,0.125W | 91637 | MFF1816G88700F |
| A16R681 | 321-0296-00 | | | RES.,FXD,FILM:11.8K OHM,1%,0.125W | 91637 | MFF1816G11801F |
| A16R682 | 315-0471-00 | | | RES.,FXD,CMPSN:470 OHM,5%,0.25W | 57668 | NTR25J-E470E |
| A16R683 | 315-0102-00 | | | RES.,FXD,CMPSN:1K OHM,5%,0.25W | 57668 | NTR25JE01K0 |
| A16R684 | 307-0053-00 | | | RES.,FXD,CMPSN:3.3 OHM,5%,0.50W | 01121 | EB33G5 |
| A16R690 | 321-0279-00 | | | RES.,FXD,FILM:7.87K OHM,1%,0.125W | 91637 | MFF1816G78700F |
| A16R691 | 321-0322-00 | | | RES.,FXD,FILM:22.1K OHM,1%,0.125W | 91637 | MFF1816G22101F |
| A16R694 | 315-0562-00 | | | RES.,FXD,CMPSN:5.6K OHM,5%,0.25W | 57668 | NTR25J-E05K6 |
| A16TP500 | 214-0579-00 | | | TERM,TEST POINT:BRS CD PL | 80009 | 214-0579-00 |
| A16TP508 | 214-0579-00 | | | TERM,TEST POINT:BRS CD PL | 80009 | 214-0579-00 |
| A16TP538 | 214-0579-00 | | | TERM,TEST POINT:BRS CD PL | 80009 | 214-0579-00 |
| A16TP552 | 214-0579-00 | | | TERM,TEST POINT:BRS CD PL | 80009 | 214-0579-00 |
| A16TP555 | 214-0579-00 | | | TERM,TEST POINT:BRS CD PL | 80009 | 214-0579-00 |
| A16TP582 | 214-0579-00 | | | TERM,TEST POINT:BRS CD PL | 80009 | 214-0579-00 |
| A16TP583 | 214-0579-00 | | | TERM,TEST POINT:BRS CD PL | 80009 | 214-0579-00 |
| A16TP584 | 214-0579-00 | | | TERM,TEST POINT:BRS CD PL | 80009 | 214-0579-00 |
| A16TP600 | 214-0579-00 | | | TERM,TEST POINT:BRS CD PL | 80009 | 214-0579-00 |
| A16TP608 | 214-0579-00 | | | TERM,TEST POINT:BRS CD PL | 80009 | 214-0579-00 |
| A16TP648 | 214-0579-00 | | | TERM,TEST POINT:BRS CD PL | 80009 | 214-0579-00 |
| A16TP657 | 214-0579-00 | | | TERM,TEST POINT:BRS CD PL | 80009 | 214-0579-00 |
| A16TP682 | 214-0579-00 | | | TERM,TEST POINT:BRS CD PL | 80009 | 214-0579-00 |
| A16TP684 | 214-0579-00 | | | TERM,TEST POINT:BRS CD PL | 80009 | 214-0579-00 |
| A16TP694 | 214-0579-00 | | | TERM,TEST POINT:BRS CD PL | 80009 | 214-0579-00 |
| A16U508 | 156-1149-00 | | | MICROCIRCUIT,LI:OPERATIONAL AMP,JFET INPUT | 27014 | LF351N/GLEA134 |
| A16U538 | 156-1149-00 | | | MICROCIRCUIT,LI:OPERATIONAL AMP,JFET INPUT | 27014 | LF351N/GLEA134 |
| A16U608 | 156-1149-00 | | | MICROCIRCUIT,LI:OPERATIONAL AMP,JFET INPUT | 27014 | LF351N/GLEA134 |
| A16U638 | 156-1149-00 | | | MICROCIRCUIT,LI:OPERATIONAL AMP,JFET INPUT | 27014 | LF351N/GLEA134 |
| A16U668 | 155-0173-00 | | | MICROCIRCUIT,LI:VERTICAL CHANNEL SWITCH | 80009 | 155-0173-00 |
| A16U682 | 156-0067-00 | | | MICROCIRCUIT,LI:OPERATIONAL AMPLIFIER | 04713 | MC1741CP1 |
| A16U694 | 156-0067-00 | | | MICROCIRCUIT,LI:OPERATIONAL AMPLIFIER | 04713 | MC1741CP1 |



http://manoman.sqhill.com

| Component No. | Tektronix Part No. | Serial/Model No. Eff | Dscont | Name & Description | Mfr Code | Mfr Part Number |
|---|---|---|---|---|---|---|
| A17 | 672-0802-01 | | | CKT BOARD ASSY:VERTICAL AMPLIFIER | 80009 | 672-0802-01 |
| A17C704 | 283-0320-00 | | | CAP.,FXD,CER DI:1PF,50V,LEADLESS | 95275 | VJ0805A1R0C-H |
| A17C704 | 283-0158-00 | | | CAP.,FXD,CER DI:1PF,10%,50V | 51642 | 100-050-NP0-109B |
| A17C704 | 283-0348-00 | | | CAP.,FXD,CER DI:0.5PF,+/-0.1PF,100V | 51642 | W150-100-NPO5088 |
| A17C704 | ---- ---- | | | (SELECTED) | | |
| A17C705 | 281-0218-00 | | | CAP.,VAR,CER DI:1-5PF,+2-2.5%,100V | 59660 | 513-013A1-5 |
| A17C730 | 281-0809-00 | | | CAP.,FXD,CER DI:200PF,5%,100V | 04222 | MA101A201JAA |
| A17C751 | 283-0176-00 | | | CAP.,FXD,CER D1:0.0022UF,20%,50V | 56289 | 272C5 |
| A17C762 | 283-0253-00 | | | CAP.,FXD,CER DI:0.01UF,10%,100V | 04222 | 15051C103KZT6C |
| A17C780 | 281-0775-00 | | | CAP.,FXD,CER DI:0.1UF,20%,50V | 04222 | MA205E104MAA |
| A17C782 | 281-0810-00 | | | CAP.,FXD,CER DI:5.6PF,0.5%,100V | 04222 | MA101A5R6DAA |
| A17C783 | 281-0775-00 | | | CAP.,FXD,CER DI:0.1UF,20%,50V | 04222 | MA205E104MAA |
| A17C787 | 285-0686-00 | | | CAP.,FXD,PLSTC:0.068UF,10%,100V | 56289 | 192P68392M465 |
| A17C791 | 285-0643-00 | | | CAP.,FXD,PLSTC:0.0047UF,5%,100V | 84411 | TEK-180 47251 |
| A17C795 | 283-0666-00 | | | CAP.,FXD,MICA D:890PF,2%,100V | 00853 | D151F891G0 |
| A17C801 | 283-0649-00 | | | CAP.,FXD,MICA D:105PF,1%,300V | 00853 | D155F1050F0 |
| A17C806 | 285-0683-00 | | | CAP.,FXD,PLSTC:0.022UF,5%,100V | 56289 | 192P22352 |
| A17C808 | 281-0204-00 | | | CAP.,VAR,PLSTC:2-22PF,100V | 80031 | 2807C00222MJ02 |
| A17C809 | 281-0775-00 | | | CAP.,FXD,CER DI:0.1UF,20%,50V | 04222 | MA205E104MAA |
| A17C837 | 283-0251-00 | | | CAP.,FXD,CER DI:87 PF,5%,100V | 72982 | 8121B145C0G0870J |
| A17C838 | 283-0197-00 | | | CAP.,FXD,CER DI:470PF,5%,100V | 04222 | SR205A471JAA |
| A17C842 | ---- ---- | | | (SELECTED) | | |
| A17C852 | 283-0353-00 | | | CAP.,FXD,CER DI:0.1UF,10%,50V | 04222 | 12105C104KA2075 |
| A17C862 | 283-0353-00 | | | CAP.,FXD,CER DI:0.1UF,10%,50V | 04222 | 12105C104KA2075 |
| A17C878 | 281-0775-00 | | | CAP.,FXD,CER DI:0.1UF,20%,50V | 04222 | MA205E104MAA |
| A17C885 | 283-0178-00 | | | CAP.,FXD,CER DI:0.1UF,+80-20%,100V | 04222 | ADVISE |
| A17C891 | 290-0768-00 | | | CAP.,FXD,ELCTLT:10UF,+50-10%,100V | 54473 | ECE-A100V10L |
| A17C893 | 290-0745-00 | | | CAP.,FXD,ELCTLT:22UF,+50-10%,25V | 54473 | ECE-A25V22L |
| A17C895 | 290-0776-00 | | | CAP.,FXD,ELCTLT:22UF,+50-10%,10V | 55680 | ULA1A220TEA |
| A17C897 | 290-0745-00 | | | CAP.,FXD,ELCTLT:22UF,+50-10%,25V | 54473 | ECE-A25V22L |
| A17CR711 | 152-0141-02 | | | SEMICOND DVC,DI:SW,SI,30V,150MA,30V,DO-35 | 12969 | NDP0263 (1N4152) |
| A17CR712 | 152-0141-02 | | | SEMICOND DVC,DI:SW,SI,30V,150MA,30V,DO-35 | 12969 | NDP0263 (1N4152) |
| A17CR767 | 152-0322-00 | | | SEMICOND DEVICE:SILICON,15V,HOT CARRIER | 50434 | 5082-2672 |
| A17CR777 | 152-0322-00 | | | SEMICOND DEVICE:SILICON,15V,HOT CARRIER | 50434 | 5082-2672 |
| A17CR862 | 152-0141-02 | | | SEMICOND DVC,DI:SW,SI,30V,150MA,30V,DO-35 | 12969 | NDP0263 (1N4152) |
| A17CR863 | 152-0141-02 | | | SEMICOND DVC,DI:SW,SI,30V,150MA,30V,DO-35 | 12969 | NDP0263 (1N4152) |
| A17CR864 | 152-0141-02 | | | SEMICOND DVC,DI:SW,SI,30V,150MA,30V,DO-35 | 12969 | NDP0263 (1N4152) |
| A17CR875 | 152-0141-02 | | | SEMICOND DVC,DI:SW,SI,30V,150MA,30V,DO-35 | 12969 | NDP0263 (1N4152) |
| A17CR878 | 152-0066-00 | | | SEMICOND DVC DI:RECT,SI,400V,1A,D0-41 | 05828 | GP10G-020 |
| A17CR883 | 152-0141-02 | | | SEMICOND DVC,DI:SW,SI,30V,150MA,30V,DO-35 | 12969 | NDP0263 (1N4152) |
| A17CR886 | 152-0141-02 | | | SEMICOND DVC,DI:SW,SI,30V,150MA,30V,DO-35 | 12969 | NDP0263 (1N4152) |
| A17CR891 | 152-0141-02 | | | SEMICOND DVC,DI:SW,SI,30V,150MA,30V,DO-35 | 12969 | NDP0263 (1N4152) |
| A17CR893 | 152-0141-02 | | | SEMICOND DVC,DI:SW,SI,30V,150MA,30V,DO-35 | 12969 | NDP0263 (1N4152) |
| A17CR897 | 152-0066-00 | | | SEMICOND DVC DI:RECT,SI,400V,1A,D0-41 | 05828 | GP10G-020 |
| A17L762 | 108-0420-00 | | | COIL,RF:FIXED,60NH | 80009 | 108-0420-00 |
| A17L762 | ---- ---- | | | (NOMINAL VALUE SELECTED) | | |
| A17L762 | 108-0578-00 | | | COIL,RF:FIXED,45NH | 80009 | 108-0578-00 |
| A17L762 | 108-0620-00 | | | COIL,RF:90NH | 80009 | 108-0620-00 |
| A17L762 | 108-0260-00 | | | COIL,RF:98NH | 80009 | 108-0260-00 |
| A17L762 | ---- ---- | | | (L762 SELECTED-45NH MIN TO 98NH MAX) | | |
| A17L763 | 108-0371-00 | | | COIL,RF:FIXED,230NH | 80009 | 108-0371-00 |
| A17L763 | ---- ---- | | | (NOMINAL VALUE SELECTED) | | |
| A17L763 | 108-0436-00 | | | COIL,RF:FIXED,240NH | 80009 | 108-0436-00 |
| A17L763 | 108-0182-00 | | | COIL,RF:FIXED,285NH | 80009 | 108-0182-00 |
| A17L763 | ---- ---- | | | (L763 SELECTED-230NH MIN TO 285NH MAX) | | |



http://manoman.sqhill.com

| Component No. | Tektronix Part No. | Serial/Model No. Eff | Dscont | Name & Description | Mfr Code | Mfr Part Number |
|---|---|---|---|---|---|---|
| A17L764 | 108-0057-00 | | | COIL,RF:FIXED,8.7UH | 80009 | 108-0057-00 |
| A17L772 | 108-0420-00 | | | COIL,RF:FIXED,60NH | 80009 | 108-0420-00 |
| A17L772 | — — | | | (NOMINAL VALUE SELECTED) | | |
| A17L772 | 108-0578-00 | | | COIL,RF:FIXED,45NH | 80009 | 108-0578-00 |
| A17L772 | 108-0620-00 | | | COIL,RF:90NH | 80009 | 108-0620-00 |
| A17L772 | 108-0260-00 | | | COIL,RF:98NH | 80009 | 108-0260-00 |
| A17L772 | — — | | | (L772 SELECTED-45NH MIN TO 98NH MAX) | | |
| A17L773 | 108-0371-00 | | | COIL,RF:FIXED,230NH | 80009 | 108-0371-00 |
| A17L773 | — — | | | (NOMINAL VALUE SELECTED) | | |
| A17L773 | 108-0436-00 | | | COIL,RF:FIXED,240NH | 80009 | 108-0436-00 |
| A17L773 | 108-0182-00 | | | COIL,RF:FIXED,285NH | 80009 | 108-0182-00 |
| A17L773 | — — | | | (L773 SELECTED-230NH MIN TO 285NH MAX) | | |
| A17L774 | 108-0057-00 | | | COIL,RF:FIXED,8.7UH | 80009 | 108-0057-00 |
| A17L857 | 108-0170-01 | | | COIL,RF:FIXED,360NH | 80009 | 108-0170-01 |
| A17L857 | — — | | | (NOMINAL VALUE SELECTED) | | |
| A17L857 | 108-0311-00 | | | COIL,RF:FIXED,153NH | 80009 | 108-0311-00 |
| A17L857 | 108-0683-00 | | | COIL,RF:FIXED,900NH | 80009 | 108-0683-00 |
| A17L857 | 108-0723-00 | | | COIL,RF:FIXED,1.12UH | 80009 | 108-0723-00 |
| A17L857 | — — | | | (L857 SELECTED-153NH MIN TO 1.12UH MAX) | | |
| A17L867 | 108-0735-00 | | | COIL,RF:FIXED,560NH | 80009 | 108-0735-00 |
| A17L867 | — — | | | (NOMINAL VALUE SELECTED) | | |
| A17L867 | 108-0262-00 | | | COIL,RF:FIXED,510NH | 80009 | 108-0262-00 |
| A17L867 | 108-0215-00 | | | COIL,RF:1.1UH | 80009 | 108-0215-00 |
| A17L867 | 108-0341-00 | | | COIL,RF:FIXED,1.4UH | 80009 | 108-0341-00 |
| A17L867 | 108-0345-00 | | | COIL,RF:FIXED,1.89UH | 80009 | 108-0345-00 |
| A17L867 | — — | | | (L867 SELECTED-510NH MIN TO 1.89UH MAX) | | |
| A17L891 | 108-0538-00 | | | COIL,RF:FIXED,2.7UH | 76493 | JWM#B7059 |
| A17L893 | 108-0538-00 | | | COIL,RF:FIXED,2.7UH | 76493 | JWM#B7059 |
| A17L895 | 108-0538-00 | | | COIL,RF:FIXED,2.7UH | 76493 | JWM#B7059 |
| A17L897 | 108-0538-00 | | | COIL,RF:FIXED,2.7UH | 76493 | JWM#B7059 |
| A17LR885 | 108-0543-00 | | | COIL,RF:FIXED,1.1UH | 80009 | 108-0543-00 |
| A17P782 | 131-0608-00 | | | TERMINAL,PIN:0.365 L X 0.025 PH BRZ GOLD | 22526 | 48283-036 |
| A17P782 | — — | | | (QUANTITY OF 20) | | |
| A17P783 | 131-0589-00 | | | TERMINAL,PIN:0.46 L X 0.025 SQ | 22526 | 48283-029 |
| A17P783 | — — | | | (QUANTITY OF 7) | | |
| A17P789 | 131-0608-00 | | | TERMINAL,PIN:0.365 L X 0.025 PH BRZ GOLD | 22526 | 48283-036 |
| A17P789 | — — | | | (QUANTITY OF 20) | | |
| A17P790 | 131-0589-00 | | | TERMINAL,PIN:0.46 L X 0.025 SQ | 22526 | 48283-029 |
| A17P790 | — — | | | (QUANTITY OF 7) | | |
| A17Q712 | 151-0221-00 | | | TRANSISTOR:SILICON,PNP | 04713 | SPS246 |
| A17Q718 | 151-0301-00 | | | TRANSISTOR:SILICON,PNP | 27014 | 2N2907A |
| A17Q722 | 151-0302-00 | | | TRANSISTOR:SILICON,NPN | 07263 | S038487 |
| A17Q732 | 151-0367-00 | | | TRANSISTOR:SILICON,NPN,SEL FROM 3571TP | 04713 | SPS 8811 |
| A17Q742 | 151-0216-00 | | | TRANSISTOR:SILICON,PNP | 04713 | SPS8803 |
| A17Q748 | 151-0192-00 | | | TRANSISTOR:SELECTED | 04713 | SPS8801 |
| A17Q752 | 151-0216-00 | | | TRANSISTOR:SILICON,PNP | 04713 | SPS8803 |
| A17Q758 | 151-0192-00 | | | TRANSISTOR:SELECTED | 04713 | SPS8801 |
| A17Q814 | 151-0302-00 | | | TRANSISTOR:SILICON,NPN | 07263 | S038487 |
| A17Q824 | 151-0302-00 | | | TRANSISTOR:SILICON,NPN | 07263 | S038487 |
| A17Q862 | 151-0183-00 | | | TRANSISTOR:SILICON,NPN | 27014 | NS14069 |
| A17Q864 | 151-0301-00 | | | TRANSISTOR:SILICON,PNP | 27014 | 2N2907A |
| A17Q872 | 151-0301-00 | | | TRANSISTOR:SILICON,PNP | 27014 | 2N2907A |
| A17Q873 | 151-0529-00 | | | SCR:200V,0.5A | 04713 | MCR206 |
| A17Q878 | 151-0136-00 | | | TRANSISTOR:SILICON,NPN | 02735 | 35495 |



http://manoman.sqhill.com

| Component No. | Tektronix Part No. | Serial/Model No. Eff | Dscont | Name & Description | Mfr Code | Mfr Part Number |
|---|---|---|---|---|---|---|
| A17Q884 | 151-0302-00 | | | TRANSISTOR:SILICON,NPN | 07263 | S038487 |
| A17Q892 | 151-0136-00 | | | TRANSISTOR:SILICON,NPN | 02735 | 35495 |
| A17R700 | 321-0318-00 | | | RES.,FXD,FILM:20K OHM,1%,0.125W | 91637 | MFF1816G20001F |
| A17R701 | 311-1232-00 | | | RES.,VAR,NONWIR:50K OHM,20%,0.50W | 32997 | 3386F-T04-503 |
| A17R702 | 315-0224-00 | | | RES.,FXD,CMPSN:220K OHM,5%,0.25W | 57668 | NTR25J-E220K |
| A17R703 | 315-0102-00 | | | RES.,FXD,CMPSN:1K OHM,5%,0.25W | 57668 | NTR25JE01K0 |
| A17R704 | 321-0193-00 | | | RES.,FXD,FILM:1K OHM,1%,0.125W | 19701 | 5043ED1K00F |
| A17R705 | 311-0605-00 | | | RES.,VAR,NONWIR:TRMR,200 OHM,0.5W | 73138 | 82-23-2 |
| A17R711 | 315-0102-00 | | | RES.,FXD,CMPSN:1K OHM,5%,0.25W | 57668 | NTR25JE01K0 |
| A17R712 | 315-0153-00 | | | RES.,FXD,CMPSN:15K OHM,5%,0.25W | 57668 | NTR25J-E 15K |
| A17R714 | 315-0623-00 | | | RES.,FXD,CMPSN:62K OHM,5%,0.25W | 57668 | NTR25J-E 62K |
| A17R718 | 315-0471-00 | | | RES.,FXD,CMPSN:470 OHM,5%,0.25W | 57668 | NTR25J-E470E |
| A17R722 | 315-0432-00 | | | RES.,FXD,CMPSN:4.3K OHM,5%,0.25W | 57668 | NTR25J-E04K3 |
| A17R730 | 315-0302-00 | | | RES.,FXD,CMPSN:3K OHM,5%,0.25W | 57668 | NTR25J-E03K0 |
| A17R731 | 315-0510-00 | | | RES.,FXD,CMPSN:51 OHM,5%,0.25W | 57668 | NTR25J-E51E0 |
| A17R732 | 321-0160-00 | | | RES.,FXD,FILM:453 OHM,1%,0.125W | 91637 | CMF116G453R0F |
| A17R733 | 315-0203-00 | | | RES.,FXD,CMPSN:20K OHM,5%,0.25W | 57668 | NTR25J-E20K0 |
| A17R740 | 311-1232-00 | | | RES.,VAR,NONWIR:50K OHM,20%,0.50W | 32997 | 3386F-T04-503 |
| A17R742 | 321-0100-00 | | | RES.,FXD,FILM:107 OHM,1%,0.125W | 91637 | MFF1816G107R0F |
| A17R743 | 321-0172-00 | | | RES.,FXD,FILM:604 OHM,1%,0.125W | 91637 | CMF55116G604R0F |
| A17R744 | 321-0216-00 | | | RES.,FXD,FILM:1.74K OHM,1%,0.125W | 91637 | MFF1816G17400F |
| A17R747 | 322-0178-00 | | | RES.,FXD,FILM:698 OHM,1%,0.25W | 75042 | CEBT0-6980F |
| A17R748 | 321-0233-00 | | | RES.,FXD,FILM:2.61K OHM,1%,0.125W | 91637 | MFF1816G26100F |
| A17R749 | 321-0095-00 | | | RES.,FXD,FILM:95.3 OHM,1%,0.125W | 91637 | MFF1816G95R30F |
| A17R750 | 321-0309-00 | | | RES.,FXD,FILM:16.2K OHM,1%,0.125W,TC=TO | 91637 | CMF55116G16201F |
| A17R751 | 321-0161-00 | | | RES.,FXD,FILM:464 OHM,1%,0.125W | 91637 | MFF1816G464R0F |
| A17R752 | 321-0216-00 | | | RES.,FXD,FILM:1.74K OHM,1%,0.125W | 91637 | MFF1816G17400F |
| A17R753 | 321-0178-00 | | | RES.,FXD,FILM:698 OHM,1%,0.125W | 91637 | CMF55116G698R0F |
| A17R754 | 321-0216-00 | | | RES.,FXD,FILM:1.74K OHM,1%,0.125W | 91637 | MFF1816G17400F |
| A17R757 | 322-0178-00 | | | RES.,FXD,FILM:698 OHM,1%,0.25W | 75042 | CEBT0-6980F |
| A17R758 | 321-0233-00 | | | RES.,FXD,FILM:2.61K OHM,1%,0.125W | 91637 | MFF1816G26100F |
| A17R759 | 321-0095-00 | | | RES.,FXD,FILM:95.3 OHM,1%,0.125W | 91637 | MFF1816G95R30F |
| A17R761 | 321-0278-00 | | | RES.,FXD,FILM:7.68K OHM,1%,0.125W | 91637 | MFF1816G76800F |
| A17R762 | 321-0124-00 | | | RES.,FXD,FILM:191 OHM,1%,0.125W | 91637 | CMF55116G191R0F |
| A17R763 | 321-0109-00 | | | RES.,FXD,FILM:133 OHM,1%,0.125W | 91637 | CMF55116G133R0F |
| A17R764 | 321-0117-00 | | | RES.,FXD,FILM:162 OHM,1%,0.125W | 91637 | CMF55116G162R0F |
| A17R765 | 321-0228-00 | | | RES.,FXD,FILM:2.32K OHM,1%,0.125W | 24546 | CT552321F |
| A17R767 | 321-0175-00 | | | RES.,FXD,FILM:649 OHM,1%,0.125W | 91637 | CMF55116G649R0F |
| A17R772 | 321-0124-00 | | | RES.,FXD,FILM:191 OHM,1%,0.125W | 91637 | CMF55116G191R0F |
| A17R773 | 321-0109-00 | | | RES.,FXD,FILM:133 OHM,1%,0.125W | 91637 | CMF55116G133R0F |
| A17R774 | 321-0117-00 | | | RES.,FXD,FILM:162 OHM,1%,0.125W | 91637 | CMF55116G162R0F |
| A17R775 | 321-0182-00 | | | RES.,FXD,FILM:768 OHM,1%,0.125W | 91637 | CMF55116G768R0F |
| A17R777 | 321-0127-00 | | | RES.,FXD,FILM:205 OHM,1%,0.125W | 91637 | CMF55116G205R0F |
| A17R780 | 315-0101-00 | | | RES.,FXD,CMPSN:100 OHM,5%,0.25W | 57668 | NTR25J-E 100E |
| A17R781 | 321-0193-00 | | | RES.,FXD,FILM:1K OHM,1%,0.125W | 19701 | 5043ED1K00F |
| A17R782 | 321-0239-00 | | | RES.,FXD,FILM:3.01K OHM,1%,0.125W | 24546 | CT55 3011 F |
| A17R785 | 311-1230-00 | | | RES.,VAR,NONWIR:20K OHM,20%,0.50W | 32997 | 3386F-T04-203 |
| A17R786 | 315-0513-00 | | | RES.,FXD,CMPSN:51K OHM,5%,0.25W | 57668 | NTR25J-E51K0 |
| A17R787 | 311-1214-00 | | | RES.,VAR,NONWIR:200K OHM,20%,0.50W | 73138 | 72-16-0 |
| A17R788 | 315-0623-00 | | | RES.,FXD,CMPSN:62K OHM,5%,0.25W | 57668 | NTR25J-E 62K |
| A17R789 | 315-0334-00 | | | RES.,FXD,CMPSN:330K OHM,5%,0.25W | 01121 | CB3345 |
| A17R791 | 311-1214-00 | | | RES.,VAR,NONWIR:200K OHM,20%,0.50W | 73138 | 72-16-0 |
| A17R792 | 315-0473-00 | | | RES.,FXD,CMPSN:47K OHM,5%,0.25W | 57668 | NTR25J-E47K0 |
| A17R793 | 315-0513-00 | | | RES.,FXD,CMPSN:51K OHM,5%,0.25W | 57668 | NTR25J-E51K0 |



http://manoman.sqhill.com

| Component No. | Tektronix Part No. | Serial/Model No. Eff | Dscont | Name & Description | Mfr Code | Mfr Part Number |
|---|---|---|---|---|---|---|
| A17R795 | 311-1214-00 | | | RES.,VAR,NONWIR:200K OHM,20%,0.50W | 73138 | 72-16-0 |
| A17R796 | 315-0363-00 | | | RES.,FXD,CMPSN:36K OHM,5%,0.25W | 57668 | NTR25J-E36K0 |
| A17R797 | 315-0513-00 | | | RES.,FXD,CMPSN:51K OHM,5%,0.25W | 57668 | NTR25J-E51K0 |
| A17R801 | 311-1214-00 | | | RES.,VAR,NONWIR:200K OHM,20%,0.50W | 73138 | 72-16-0 |
| A17R802 | 315-0333-00 | | | RES.,FXD,CMPSN:33K OHM,5%,0.25W | 57668 | NTR25J-E33K0 |
| A17R803 | 315-0513-00 | | | RES.,FXD,CMPSN:51K OHM,5%,0.25W | 57668 | NTR25J-E51K0 |
| A17R804 | 315-0154-00 | | | RES.,FXD,CMPSN:150K OHM,5%,0.25W | 57668 | NTR25J-E150K |
| A17R805 | 315-0563-00 | | | RES.,FXD,CMPSN:56K OHM,5%,0.25W | 57668 | NTR25J-E 56K |
| A17R806 | 311-1214-00 | | | RES.,VAR,NONWIR:200K OHM,20%,0.50W | 73138 | 72-16-0 |
| A17R808 | 315-0433-00 | | | RES.,FXD,CMPSN:43K OHM,5%,0.25W | 57668 | NTR25J-E043K |
| A17R814 | 321-0143-00 | | | RES.,FXD,FILM:301 OHM,1%,0.125W | 91637 | CMF55116G301R0F |
| A17R815 | 321-0090-00 | | | RES.,FXD,FILM:84.5 OHM,1%,0.125W | 91637 | MFF1816G84R50F |
| A17R821 | 321-0104-00 | | | RES.,FXD,FILM:118 OHM,1%,0.125W | 91637 | CMF55116G1180R0F |
| A17R823 | 315-0151-00 | | | RES.,FXD,CMPSN:150 OHM,5%,0.25W | 57668 | NTR25J-E150E |
| A17R824 | 321-0143-00 | | | RES.,FXD,FILM:301 OHM,1%,0.125W | 91637 | CMF55116G301R0F |
| A17R825 | 321-0057-00 | | | RES.,FXD,FILM:38.3 OHM,1%,0.125W | 91637 | CMF55116G38R30F |
| A17R830 | 311-1266-00 | | | RES.,VAR,NONWIR:2.5K OHM,10%,0.50W | 32997 | 3329P-L58-252 |
| A17R831 | 321-0105-00 | | | RES.,FXD,FILM:121 OHM,1%,0.125W | 91637 | CMF55116G121R0F |
| A17R832 | 321-0105-00 | | | RES.,FXD,FILM:121 OHM,1%,0.125W | 91637 | CMF55116G121R0F |
| A17R836 | 311-1263-00 | | | RES.,VAR,NONWIR:1K OHM,10%,0.50W | 32997 | 3329P-L58-102 |
| A17R837 | 321-0068-00 | | | RES.,FXD,FILM:49.9 OHM,1%,0.125W | 91637 | CMF55116G49R90F |
| A17R838 | 321-0068-00 | | | RES.,FXD,FILM:49.9 OHM,1%,0.125W | 91637 | CMF55116G49R90F |
| A17R849 | 322-0104-00 | | | RES.,FXD,FILM:118 OHM,1%,0.25W | 91637 | MFF1421G118R0F |
| A17R854 | 321-0170-00 | | | RES.,FXD,FILM:576 OHM,1%,0.125W | 91637 | CMF55116G576R0F |
| A17R855 | 321-0126-00 | | | RES.,FXD,FILM:200 OHM,1%,0.125W | 91637 | CMF55116G200R0F |
| A17R856 | 321-0238-00 | | | RES.,FXD,FILM:2.94K OHM,1%,0.125W | 91637 | MFF1816G29400F |
| A17R857 | 317-0122-00 | | | RES.,FXD,CMPSN:1.2K OHM,5%,0.125W | 01121 | BB1225 |
| A17R857 | —— —— | | | (NOMINAL VALUE-820 OHM MIN TO 1.6K MAX) | | |
| A17R860 | 315-0822-00 | | | RES.,FXD,CMPSN:8.2K OHM,5%,0.25W | 57668 | NTR25J-E 8K2 |
| A17R861 | 315-0272-00 | | | RES.,FXD,CMPSN:2.7K OHM,5%,0.25W | 57668 | NTR25J-E02K7 |
| A17R862 | 301-0121-00 | | | RES.,FXD,CMPSN:120 OHM,5%,0.5W | 57668 | R50J 120 OHM |
| A17R863 | 315-0362-00 | | | RES.,FXD,CMPSN:3.6K OHM,5%,0.25W | 57668 | NTR25J-E 3K6 |
| A17R864 | 315-0133-00 | | | RES.,FXD,CMPSN:13K OHM,5%,0.25W | 57668 | NTR25J-E 13K |
| A17R865 | 315-0303-00 | | | RES.,FXD,CMPSN:30K OHM,5%,0.25W | 57668 | NTR25J-E 30K |
| A17R866 | 315-0682-00 | | | RES.,FXD,CMPSN:6.8K OHM,5%,0.25W | 57668 | NTR25J-E06K8 |
| A17R870 | 315-0431-00 | | | RES.,FXD,CMPSN:430 OHM,5%,0.25W | 57668 | NTR25J-E 430E |
| A17R871 | 315-0153-00 | | | RES.,FXD,CMPSN:15K OHM,5%,0.25W | 57668 | NTR25J-E 15K |
| A17R872 | 315-0102-00 | | | RES.,FXD,CMPSN:1K OHM,5%,0.25W | 57668 | NTR25JE01K0 |
| A17R873 | 321-0426-00 | | | RES.,FXD,FILM:267K OHM,1%,0.125W | 91637 | MFF1816G26702F |
| A17R874 | 321-0377-00 | | | RES.,FXD,FILM:82.5K OHM,1%,0.125W | 91637 | MFF1816G82501F |
| A17R875 | 315-0623-00 | | | RES.,FXD,CMPSN:62K OHM,5%,0.25W | 57668 | NTR25J-E 62K |
| A17R876 | 315-0243-00 | | | RES.,FXD,CMPSN:24K OHM,5%,0.25W | 57668 | NTR25J-E24K0 |
| A17R877 | 301-0242-00 | | | RES.,FXD,CMPSN:2.4K OHM,5%,0.5W | 01121 | EB2425 |
| A17R878 | 308-0243-00 | | | RES.,FXD,WW:240 OHM,5%,3W | 91637 | CW2BB240R0J |
| A17R881 | 321-0265-00 | | | RES.,FXD,FILM:5.62K OHM,1%,0.125W | 24546 | CT555621F |
| A17R882 | 321-0201-00 | | | RES.,FXD,FILM:1.21K OHM,1%,0.125W | 91637 | CMF55116G12100F |
| A17R883 | 315-0392-00 | | | RES.,FXD,CMPSN:3.9K OHM,5%,0.25W | 57668 | NTR25J-E03K9 |
| A17R884 | 315-0332-00 | | | RES.,FXD,CMPSN:3.3K OHM,5%,0.25W | 57668 | NTR25J-E03K3 |
| A17R886 | 321-0328-00 | | | RES.,FXD,FILM:25.5K OHM,1%,0.125W | 91637 | MFF1816G25501F |
| A17R887 | 315-0682-00 | | | RES.,FXD,CMPSN:6.8K OHM,5%,0.25W | 57668 | NTR25J-E06K8 |
| A17R888 | 321-0289-00 | | | RES.,FXD,FILM:10K OHM,1%,0.125W | 91637 | MFF1816G10001F |
| A17R891 | 315-0752-00 | | | RES.,FXD,CMPSN:7.5K OHM,5%,0.25W | 57668 | NTR25J-E07K5 |
| A17R892 | 301-0102-00 | | | RES.,FXD,CMPSN:1K OHM,5%,0.50W | 01121 | EB1025 |
| A17R893 | 308-0298-00 | | | RES.,FXD,WW:560 OHM,5%,3W | 91637 | CW2B-B560R0J T/R |



http://manoman.sqhill.com

| Component No. | Tektronix Part No. | Serial/Model No. Eff | Dscont | Name & Description | Mfr Code | Mfr Part Number |
|---|---|---|---|---|---|---|
| A17R894 | 321-0001-00 | | | RES.,FXD,FILM:10 OHM,1%,0.125W | 75042 | CEAT0-10R00F |
| A17RT813 | 307-0127-00 | | | RES.,THERMAL:1K OHM,10% | 50157 | 2D1596 |
| A17U705 | 156-1149-00 | | | MICROCIRCUIT,LI:OPERATIONAL AMP,JFET INPUT | 27014 | LF351N/GLEA134 |
| A17U762 | 155-0174-00 | | | MICROCIRCUIT,LI:DELAY LINE COMPENSATOR | 80009 | 155-0174-00 |
| A17U782 | 156-1149-00 | | | MICROCIRCUIT,LI:OPERATIONAL AMP,JFET INPUT | 27014 | LF351N/GLEA134 |
| A17U808 | 156-1149-00 | | | MICROCIRCUIT,LI:OPERATIONAL AMP,JFET INPUT | 27014 | LF351N/GLEA134 |
| A17U842 | 155-0175-00 | | | MICROCIRCUIT,LI:TRIGGER AMPLIFIER | 80009 | 155-0175-00 |
| A17U862 | 155-0176-00 | | | MICROCIRCUIT,LI:MAIN VERTICAL OUTPUT | 80009 | 155-0176-00 |
| A17U876 | 156-0158-00 | | | MICROCIRCUIT,LI:DUAL OPERATIONAL AMPLIFIER | 18324 | MC1458N |
| A17VR852 | 152-0683-00 | | | SEMICOND DEVICE:ZEN,SI,7.5V,5%,1.0W | 12969 | UZ2359 |
| A17VR862 | 152-0683-00 | | | SEMICOND DEVICE:ZEN,SI,7.5V,5%,1.0W | 12969 | UZ2359 |
| A17VR878 | 152-0281-00 | | | SEMICOND DEVICE:ZENER,0.4W,22V,5% | 12954 | 1N969B |
| A17A1 | 670-5616-00 | | | CKT BOARD ASSY:VERTICAL CRT FLEX CON | 80009 | 670-5616-00 |
| A17A1 | — — | | | (NO REPLACEABLE SUBPARTS) | | |



http://manoman.sqhill.com

| Component No. | Tektronix Part No. | Serial/Model No. Eff | Dscont | Name & Description | Mfr Code | Mfr Part Number |
|---|---|---|---|---|---|---|
| A18 | 672-0800-00 | | | CKT BOARD ASSY:CRT TERMINATION | 80009 | 672-0800-00 |
| A18C881 | 283-0005-00 | | | CAP.,FXD,CER DI:0.01UF,+100-0%,250V | 04222 | SR303E103ZAA |
| A18C882 | 283-0005-00 | | | CAP.,FXD,CER DI:0.01UF,+100-0%,250V | 04222 | SR303E103ZAA |
| A18A1 | 670-5616-00 | | | CKT BOARD ASSY:VERTICAL CRT FLEX CON | 80009 | 670-5616-00 |
| A18A1 | —— —— | | | (NO REPLACEABLE SUBPARTS) | | |
| A19 | 672-0140-00 | | | CKT BOARD ASSY:HORIZONTAL AMPLIFIER | 80009 | 672-0140-00 |
| A19C974 | 281-0808-00 | | | CAP.,FXD,CER DI:7PF,20%,100V | 04222 | MA101A7R04AA |
| A19C980 | 283-0597-00 | | | CAP.,FXD,MICA D:470PF,10%,300V | 00853 | D155F471K0 |
| A19C982 | 285-0813-00 | | | CAP.,FXD,PLSTC:0.0015UF,5%,100V | 14752 | 410D1B152J |
| A19C985 | 285-0598-00 | | | CAP.,FXD,PLSTC:0.01UF,5%,100V | 19396 | DU490B103J |
| A19C988 | 285-0808-00 | | | CAP.,FXD,PLSTC:0.1UF,10%,50V | 56289 | LP66A1A104K004 |
| A19C1001 | 290-0769-00 | | | CAP.,FXD,ELCTLT:10UF,+50-10%,100V | 56289 | 500D152 |
| A19C1002 | 290-0523-00 | | | CAP.,FXD,ELCTLT:2.2UF,20%,20V | 56289 | 196D225X0020HA1 |
| A19C1003 | 290-0745-00 | | | CAP.,FXD,ELCTLT:22UF,+50-10%,25V | 54473 | ECE-A25V22L |
| A19C1004 | 290-0523-00 | | | CAP.,FXD,ELCTLT:2.2UF,20%,20V | 56289 | 196D225X0020HA1 |
| A19C1017 | 283-0000-00 | | | CAP.,FXD,CER DI:0.001UF,+100-0%,500V | 59660 | 831610Y5U0102P |
| A19C1019 | 290-0776-00 | | | CAP.,FXD,ELCTLT:22UF,+50-10%,10V | 55680 | ULA1A220TEA |
| A19C1035 | 281-0601-00 | | | CAP.,FXD,CER DI:7.5PF,500V | 59660 | 301-000C0H0759D |
| A19C1036 | 281-0203-00 | | | CAP.,VAR,PLSTC:2-10PF,100V | 80031 | 2807C00210MJ02F0 |
| A19C1040 | 281-0122-00 | | | CAP.,VAR,CER DI:2.5-9PF,100V | 59660 | 518-000A2.5-9 |
| A19C1044 | 281-0592-00 | | | CAP.,FXD,CER DI:4.7PF,+/-0.5PF,500V | 59660 | 301000C0H0479D |
| A19C1060 | 281-0122-00 | | | CAP.,VAR,CER DI:2.5-9PF,100V | 59660 | 518-000A2.5-9 |
| A19C1061 | 283-0110-00 | | | CAP.,FXD,CER DI:0.005UF,+80-20%,150V | 59660 | 855-547-E-502Z |
| A19C1064 | 281-0592-00 | | | CAP.,FXD,CER DI:4.7PF,+/-0.5PF,500V | 59660 | 301000C0H0479D |
| A19C1073 | 281-0773-00 | | | CAP.,FXD,CER DI:0.1UF,20%,50V | 04222 | MA201C103KAA |
| A19C1075 | 283-0299-00 | | | CAP.,FXD,CER DI:51PF,5%,500V | 96733 | R3229 |
| A19C1077 | 283-0160-00 | | | CAP.,FXD,CER DI:1.5PF,10%,50V | 93958 | 1C15RB |
| A19C1077 | 283-0185-00 | | | CAP.,FXD,CER DI:2.5PF,5%,50V | 96733 | T-DG43BY2R5BP |
| A19C1077 | 283-0190-00 | | | CAP.,FXD,CER DI:0.47UF,5%,50V | 72982 | 8141N077X7R0474J |
| A19C1077 | —— —— | | | (A19C1077 IS SELECTED) | | |
| A19C1096 | 283-0000-00 | | | CAP.,FXD,CER DI:0.001UF,+100-0%,500V | 59660 | 831610Y5U0102P |
| A19C1006 | 152-0141-02 | | | SEMICOND DVC,DI:SW,SI,30V,150MA,30V,DO-35 | 12969 | NDP0263 (1N4152) |
| A19CR1082 | 152-0141-02 | | | SEMICOND DVC,DI:SW,SI,30V,150MA,30V,DO-35 | 12969 | NDP0263 (1N4152) |
| A19J970 | 131-1003-00 | | | CONN,RCPT,ELEC:CKT BD MT,3 PRONG | 80009 | 131-1003-00 |
| A19J971 | 131-1003-00 | | | CONN,RCPT,ELEC:CKT BD MT,3 PRONG | 80009 | 131-1003-00 |
| A19L1001 | 108-0538-00 | | | COIL,RF:FIXED,2.7UH | 76493 | JWM#B7059 |
| A19L1002 | 108-0538-00 | | | COIL,RF:FIXED,2.7UH | 76493 | JWM#B7059 |
| A19L1003 | 108-0538-00 | | | COIL,RF:FIXED,2.7UH | 76493 | JWM#B7059 |
| A19L1004 | 108-0538-00 | | | COIL,RF:FIXED,2.7UH | 76493 | JWM#B7059 |
| A19L1042 | 108-0733-00 | | | COIL,RF:FIXED,113NH | 80009 | 108-0733-00 |
| A19L1062 | 108-0733-00 | | | COIL,RF:FIXED,113NH | 80009 | 108-0733-00 |
| A19LR1096 | 108-0325-00 | | | COIL,RF:0.5UH | 80009 | 108-0325-00 |
| A19Q914 | 151-0302-00 | | | TRANSISTOR:SILICON,NPN | 07263 | S038487 |
| A19Q923 | 151-0302-00 | | | TRANSISTOR:SILICON,NPN | 07263 | S038487 |
| A19Q992 | 151-0192-00 | | | TRANSISTOR:SELECTED | 04713 | SPS8801 |
| A19Q994 | 151-0192-00 | | | TRANSISTOR:SELECTED | 04713 | SPS8801 |
| A19Q1022 | 151-0190-00 | | | TRANSISTOR:NPN,SI,TO-92 | 04713 | SPS7969 |
| A19Q1024 | 151-0190-00 | | | TRANSISTOR:NPN,SI,TO-92 | 04713 | SPS7969 |



http://manoman.sqhill.com

| Component No. | Tektronix Part No. | Serial/Model No. Eff | Dscont | Name & Description | Mfr Code | Mfr Part Number |
|---|---|---|---|---|---|---|
| A19Q1028 | 151-0424-00 | | | TRANSISTOR:SILICON,NPN | 04713 | SPS8246 |
| A19Q1034 | 151-0424-00 | | | TRANSISTOR:SILICON,NPN | 04713 | SPS8246 |
| A19Q1046 | 151-0221-00 | | | TRANSISTOR:SILICON,PNP | 04713 | SPS246 |
| A19Q1049 | 151-0220-00 | | | TRANSISTOR:PNP,SI,TO-92 | 07263 | S036228 |
| A19Q1052 | 151-0220-00 | | | TRANSISTOR:PNP,SI,TO-92 | 07263 | S036228 |
| A19Q1058 | 151-0302-00 | | | TRANSISTOR:SILICON,NPN | 07263 | S038487 |
| A19Q1066 | 151-0221-00 | | | TRANSISTOR:SILICON,PNP | 04713 | SPS246 |
| A19Q1072 | 151-0220-00 | | | TRANSISTOR:PNP,SI,TO-92 | 07263 | S036228 |
| A19Q1078 | 151-0302-00 | | | TRANSISTOR:SILICON,NPN | 07263 | S038487 |
| A19Q1084 | 151-0302-00 | | | TRANSISTOR:SILICON,NPN | 07263 | S038487 |
| A19R902 | 315-0102-00 | | | RES.,FXD,CMPSN:1K OHM,5%,0.25W | 57668 | NTR25JE01K0 |
| A19R905 | 321-0186-00 | | | RES.,FXD,FILM:845 OHM,1%,0.125W | 91637 | CMF55116G84500F |
| A19R906 | 321-0252-00 | | | RES.,FXD,FILM:4.12K OHM,1%,0.125W | 91637 | MFF1816G41200F |
| A19R913 | 321-0097-00 | | | RES.,FXD,FILM:100 OHM,1%,0.125W | 91637 | CMF55116G100R0F |
| A19R921 | 315-0102-00 | | | RES.,FXD,CMPSN:1K OHM,5%,0.25W | 57668 | NTR25JE01K0 |
| A19R922 | 315-0102-00 | | | RES.,FXD,CMPSN:1K OHM,5%,0.25W | 57668 | NTR25JE01K0 |
| A19R923 | 323-0193-00 | | | RES.,FXD,FILM:1K OHM,1%,0.50W | 75042 | CECT0-1001F |
| A19R924 | 321-0069-00 | | | RES.,FXD,FILM:51.1 OHM,1%,0.125W | 91637 | CMF55116G51R10F |
| A19R926 | 315-0272-00 | | | RES.,FXD,CMPSN:2.7K OHM,5%,0.25W | 57668 | NTR25J-E02K7 |
| A19R927 | 315-0203-00 | | | RES.,FXD,CMPSN:20K OHM,5%,0.25W | 57668 | NTR25J-E20K0 |
| A19R928 | 323-0193-00 | | | RES.,FXD,FILM:1K OHM,1%,0.50W | 75042 | CECT0-1001F |
| A19R932 | 321-0097-00 | | | RES.,FXD,FILM:100 OHM,1%,0.125W | 91637 | CMF55116G100R0F |
| A19R933 | 321-0097-00 | | | RES.,FXD,FILM:100 OHM,1%,0.125W | 91637 | CMF55116G100R0F |
| A19R934 | 321-0097-00 | | | RES.,FXD,FILM:100 OHM,1%,0.125W | 91637 | CMF55116G100R0F |
| A19R963 | 323-0148-00 | | | RES.,FXD,FILM:340 OHM,1%,0.50W | 91637 | MFF1226G340R0F |
| A19R968 | 323-0114-00 | | | RES.,FXD,FILM:150 OHM,1%,0.50W | 75042 | CECT0-1500F |
| A19R969 | 323-0114-00 | | | RES.,FXD,FILM:150 OHM,1%,0.50W | 75042 | CECT0-1500F |
| A19R971 | 317-0103-00 | | | RES.,FXD,CMPSN:10K OHM,5%,0.125W | 01121 | BB1035 |
| A19R972 | 317-0303-00 | | | RES.,FXD,CMPSN:30K OHM,5%,0.125W | 01121 | BB3035 |
| A19R973 | 321-0289-00 | | | RES.,FXD,FILM:10K OHM,1%,0.125W | 91637 | MFF1816G10001F |
| A19R974 | 321-0335-00 | | | RES.,FXD,FILM:30.1K OHM,1%,0.125W | 91637 | CMF55116G30101F |
| A19R975 | 311-1222-00 | | | RES.,VAR,NONWIR:100 OHM,20%,0.50W | 32997 | 3386F-T04-101 |
| A19R976 | 315-0680-00 | | | RES.,FXD,CMPSN:68 OHM,5%,0.25W | 57668 | NTR25J-E68E0 |
| A19R978 | 321-0097-00 | | | RES.,FXD,FILM:100 OHM,1%,0.125W | 91637 | CMF55116G100R0F |
| A19R979 | 321-0251-00 | | | RES.,FXD,FILM:4.02K OHM,1%,0.125W | 91637 | MFF1816G40200F |
| A19R980 | 311-1225-00 | | | RES.,VAR,NONWIR:1K OHM,20%,0.50W | 32997 | 3386F-T04-102 |
| A19R982 | 311-1227-00 | | | RES.,VAR,NONWIR:5K OHM,20%,0.50W | 32997 | 3386F-T04-502 |
| A19R985 | 311-1230-00 | | | RES.,VAR,NONWIR:20K OHM,20%,0.50W | 32997 | 3386F-T04-203 |
| A19R988 | 311-1232-00 | | | RES.,VAR,NONWIR:50K OHM,20%,0.50W | 32997 | 3386F-T04-503 |
| A19R989 | 321-0294-00 | | | RES.,FXD,FILM:11.3K OHM,1%,0.125W | 91637 | CMF55116G11301F |
| A19R992 | 321-0102-00 | | | RES.,FXD,FILM:113 OHM,1%,0.125W | 91637 | CMF55116G113R0F |
| A19R993 | 321-0127-00 | | | RES.,FXD,FILM:205 OHM,1%,0.125W | 91637 | CMF55116G205R0F |
| A19R994 | 321-0267-00 | | | RES.,FXD,FILM:5.9K OHM,1%,0.125W | 91637 | MFF1816G59000F |
| A19R995 | 311-1224-00 | | | RES.,VAR,NONWIR:500 OHM,20%,0.50W | 32997 | 3386F-T04-501 |
| A19R996 | 321-0252-00 | | | RES.,FXD,FILM:4.12K OHM,1%,0.125W | 91637 | MFF1816G41200F |
| A19R997 | 321-0102-00 | | | RES.,FXD,FILM:113 OHM,1%,0.125W | 91637 | CMF55116G113R0F |
| A19R998 | 323-0114-00 | | | RES.,FXD,FILM:150 OHM,1%,0.50W | 75042 | CECT0-1500F |
| A19R999 | 323-0114-00 | | | RES.,FXD,FILM:150 OHM,1%,0.50W | 75042 | CECT0-1500F |
| A19R1001 | 315-0563-00 | | | RES.,FXD,CMPSN:56K OHM,5%,0.25W | 57668 | NTR25J-E 56K |
| A19R1002 | 321-0262-00 | | | RES.,FXD,FILM:5.23K OHM,1%,0.125W | 91637 | MFF1816G52300F |
| A19R1003 | 315-0102-00 | | | RES.,FXD,CMPSN:1K OHM,5%,0.25W | 57668 | NTR25JE01K0 |
| A19R1004 | 321-0231-00 | | | RES.,FXD,FILM:2.49K OHM,1%,0.125W | 91637 | MFF1816G24900F |
| A19R1005 | 311-1224-00 | | | RES.,VAR,NONWIR:500 OHM,20%,0.50W | 32997 | 3386F-T04-501 |
| A19R1007 | 321-0350-00 | | | RES.,FXD,FILM:43.2K OHM,1%,0.125W | 91637 | CMF55116G43201F |



http://manoman.sqhill.com

| Component No. | Tektronix Part No. | Serial/Model No. Eff | Dscont | Name & Description | Mfr Code | Mfr Part Number |
|---|---|---|---|---|---|---|
| A19R1010 | 315-0103-00 | | | RES.,FXD,CMPSN:10K OHM,5%,0.25W | 57668 | NTR25J-E10K0 |
| A19R1011 | 321-0271-00 | | | RES.,FXD,FILM:6.49K OHM,1%,0.125W | 91637 | MFF1816G64900F |
| A19R1012 | 321-0297-00 | | | RES.,FXD,FILM:12.1K OHM,1%,0.125W | 91637 | MFF1816G12101F |
| A19R1013 | 315-0473-00 | | | RES.,FXD,CMPSN:47K OHM,5%,0.25W | 57668 | NTR25J-E47K0 |
| A19R1014 | 315-0752-00 | | | RES.,FXD,CMPSN:7.5K OHM,5%,0.25W | 57668 | NTR25J-E07K5 |
| A19R1015 | 315-0473-00 | | | RES.,FXD,CMPSN:47K OHM,5%,0.25W | 57668 | NTR25J-E47K0 |
| A19R1016 | 321-0379-00 | | | RES.,FXD,FILM:86.6K OHM,1%,0.125W | 91637 | MFF1816G86601F |
| A19R1017 | 321-0396-00 | | | RES.,FXD,FILM:130K OHM,1%,0.125W | 91637 | MFF1816G13002F |
| A19R1018 | 315-0510-00 | | | RES.,FXD,CMPSN:51 OHM,5%,0.25W | 57668 | NTR25J-E51E0 |
| A19R1019 | 317-0510-00 | | | RES.,FXD,CMPSN:51 OHM,5%,0.125W | 01121 | BB5105 |
| A19R1020 | 321-0165-00 | | | RES.,FXD,FILM:511 OHM,1%,0.125W | 91637 | CMF55116G511R0F |
| A19R1021 | 315-0102-00 | | | RES.,FXD,CMPSN:1K OHM,5%,0.25W | 57668 | NTR25JE01K0 |
| A19R1022 | 315-0512-00 | | | RES.,FXD,CMPSN:5.1K OHM,5%,0.25W | 57668 | NTR25J-E05K1 |
| A19R1023 | 315-0511-00 | | | RES.,FXD,CMPSN:510 OHM,5%,0.25W | 57668 | NTR25J-E 510E |
| A19R1024 | 315-0123-00 | | | RES.,FXD,CMPSN:12K OHM,5%,0.25W | 57668 | NTR25J-E12K0 |
| A19R1025 | 311-1231-00 | | | RES.,VAR,NONWIR:25K OHM,20%,0.50W | 32997 | 3386F-T04-253 |
| A19R1026 | 315-0271-00 | | | RES.,FXD,CMPSN:270 OHM,5%,0.25W | 01121 | CB2715 |
| A19R1028 | 321-0291-00 | | | RES.,FXD,FILM:10.5K OHM,1%,0.125W | 91637 | MFF1816G10501F |
| A19R1029 | 315-0362-00 | | | RES.,FXD,CMPSN:3.6K OHM,5%,0.25W | 57668 | NTR25J-E 3K6 |
| A19R1030 | 311-1225-00 | | | RES.,VAR,NONWIR:1K OHM,20%,0.50W | 32997 | 3386F-T04-102 |
| A19R1031 | 321-0291-00 | | | RES.,FXD,FILM:10.5K OHM,1%,0.125W | 91637 | MFF1816G10501F |
| A19R1032 | 315-0221-00 | | | RES.,FXD,CMPSN:220 OHM,5%,0.25W | 57668 | NTR25J-E220E |
| A19R1033 | 315-0182-00 | | | RES.,FXD,CMPSN:1.8K OHM,5%,0.25W | 57668 | NTR25J-E1K8 |
| A19R1034 | 321-0192-00 | | | RES.,FXD,FILM:976 OHM,1%,0.125W | 91637 | CMF55116G976R0F |
| A19R1035 | 311-1222-00 | | | RES.,VAR,NONWIR:100 OHM,20%,0.50W | 32997 | 3386F-T04-101 |
| A19R1036 | 321-0235-00 | | | RES.,FXD,FILM:2.74K OHM,1%,0.125W | 91637 | MFF1816G27400F |
| A19R1037 | 321-0192-00 | | | RES.,FXD,FILM:976 OHM,1%,0.125W | 91637 | CMF55116G976R0F |
| A19R1040 | 317-0120-00 | | | RES.,FXD,CMPSN:12 OHM,5%,0.125W | 01121 | BB1205 |
| A19R1041 | 317-0120-00 | | | RES.,FXD,CMPSN:12 OHM,5%,0.125W | 01121 | BB1205 |
| A19R1042 | 321-0193-00 | | | RES.,FXD,FILM:1K OHM,1%,0.125W | 19701 | 5043ED1K00F |
| A19R1043 | 323-0064-00 | | | RES.,FXD,FILM:45.3 OHM,1%,0.50W | 91637 | MFF1226G45R30F |
| A19R1044 | 315-0911-00 | | | RES.,FXD,CMPSN:910 OHM,5%,0.25W | 57668 | NTR25J-E910E |
| A19R1045 | 321-0380-00 | | | RES.,FXD,FILM:88.7K OHM,1%,0.125W | 91637 | MFF1816G88701F |
| A19R1046 | 321-0324-00 | | | RES.,FXD,FILM:23.2K OHM,1%,0.125W | 91637 | MFF1816G23201F |
| A19R1047 | 323-0606-00 | | | RES.,FXD,FILM:60 OHM,1%,0.5W | 91637 | MFF1226G60R00F |
| A19R1049 | 321-0160-00 | | | RES.,FXD,FILM:453 OHM,1%,0.125W | 91637 | CMF116G453R0F |
| A19R1052 | 315-0821-00 | | | RES.,FXD,CMPSN:820 OHM,5%,0.25W | 57668 | NTR25J-E 820E |
| A19R1054 | 317-0100-00 | | | RES.,FXD,CMPSN:10 OHM,5%,0.125W | 01121 | BB1005 |
| A19R1058 | 315-0131-00 | | | RES.,FXD,CMPSN:130 OHM,5%,0.25W | 57668 | NTR25J-E 130E |
| A19R1059 | 307-0113-00 | | | RES.,FXD,CMPSN:5.1 OHM,5%,0.25W | 01121 | CB51G5 |
| A19R1060 | 317-0120-00 | | | RES.,FXD,CMPSN:12 OHM,5%,0.125W | 01121 | BB1205 |
| A19R1061 | 317-0120-00 | | | RES.,FXD,CMPSN:12 OHM,5%,0.125W | 01121 | BB1205 |
| A19R1062 | 311-1224-00 | | | RES.,VAR,NONWIR:500 OHM,20%,0.50W | 32997 | 3386F-T04-501 |
| A19R1063 | 323-0064-00 | | | RES.,FXD,FILM:45.3 OHM,1%,0.50W | 91637 | MFF1226G45R30F |
| A19R1064 | 315-0911-00 | | | RES.,FXD,CMPSN:910 OHM,5%,0.25W | 57668 | NTR25J-E910E |
| A19R1065 | 321-0380-00 | | | RES.,FXD,FILM:88.7K OHM,1%,0.125W | 91637 | MFF1816G88701F |
| A19R1066 | 321-0324-00 | | | RES.,FXD,FILM:23.2K OHM,1%,0.125W | 91637 | MFF1816G23201F |
| A19R1067 | 323-0606-00 | | | RES.,FXD,FILM:60 OHM,1%,0.5W | 91637 | MFF1226G60R00F |
| A19R1069 | 315-0272-00 | | | RES.,FXD,CMPSN:2.7K OHM,5%,0.25W | 57668 | NTR25J-E02K7 |
| A19R1071 | 317-0510-00 | | | RES.,FXD,CMPSN:51 OHM,5%,0.125W | 01121 | BB5105 |
| A19R1072 | 315-0821-00 | | | RES.,FXD,CMPSN:820 OHM,5%,0.25W | 57668 | NTR25J-E 820E |
| A19R1073 | 311-1221-00 | | | RES.,VAR,NONWIR:50 OHM,20%,0.50W | 32997 | 3386F-T04-500 |
| A19R1074 | 317-0100-00 | | | RES.,FXD,CMPSN:10 OHM,5%,0.125W | 01121 | BB1005 |
| A19R1075 | 317-0820-00 | | | RES.,FXD,CMPSN:82 OHM,5%,0.125W | 01121 | BB8205 |



http://manoman.sqhill.com

| Component No. | Tektronix Part No. | Serial/Model No. Eff | Dscont | Name & Description | Mfr Code | Mfr Part Number |
|---|---|---|---|---|---|---|
| A19R1076 | 323-0090-00 | | | RES.,FXD,FILM:84.5 OHM,1%,0.50W | 75042 | CECT0-84R5F |
| A19R1077 | 317-0510-00 | | | RES.,FXD,CMPSN:51 OHM,5%,0.125W | 01121 | BB5105 |
| A19R1078 | 315-0131-00 | | | RES.,FXD,CMPSN:130 OHM,5%,0.25W | 57668 | NTR25J-E 130E |
| A19R1079 | 315-0471-00 | | | RES.,FXD,CMPSN:470 OHM,5%,0.25W | 57668 | NTR25J-E470E |
| A19R1080 | 315-0104-00 | | | RES.,FXD,CMPSN:100K OHM,5%,0.25W | 57668 | NTR25J-E100K |
| A19R1081 | 301-0432-00 | | | RES.,FXD,CMPSN:4.3K OHM,5%,0.5W | 57668 | TR50J-E 4K3 |
| A19R1082 | 311-1225-00 | | | RES.,VAR,NONWIR:1K OHM,20%,0.50W | 32997 | 3386F-T04-102 |
| A19R1083 | 315-0162-00 | | | RES.,FXD,CMPSN:1.6K OHM,5%,0.25W | 57668 | NTR25J-E 1K6 |
| A19R1084 | 315-0123-00 | | | RES.,FXD,CMPSN:12K OHM,5%,0.25W | 57668 | NTR25J-E12K0 |
| A19R1085 | 315-0152-00 | | | RES.,FXD,CMPSN:1.5K OHM,5%,0.25W | 57668 | NTR25J-E01K5 |
| A19R1086 | 315-0100-00 | | | RES.,FXD,CMPSN:10 OHM,5%,0.25W | 57668 | NTR25J-E 10E0 |
| A19R1087 | 315-0100-00 | | | RES.,FXD,CMPSN:10 OHM,5%,0.25W | 57668 | NTR25J-E 10E0 |
| A19R1088 | 321-0261-00 | | | RES.,FXD,FILM:5.11K OHM,1%,0.125W | 91637 | MFF1816G51100F |
| A19R1089 | 321-0328-00 | | | RES.,FXD,FILM:25.5K OHM,1%,0.125W | 91637 | MFF1816G25501F |
| A19R1094 | 323-0069-00 | | | RES.,FXD,FILM:51.1 OHM,1%,0.50W | 91637 | MFF1226G51R10F |
| A19R1095 | 323-0069-00 | | | RES.,FXD,FILM:51.1 OHM,1%,0.50W | 91637 | MFF1226G51R10F |
| A19R1096 | 315-0100-00 | | | RES.,FXD,CMPSN:10 OHM,5%,0.25W | 57668 | NTR25J-E 10E0 |
| A19RT1080 | 307-0181-00 | | | RES.,THERMAL:100K OHM,10%,4MW/DEG C | 15454 | 1DE104-K-220EC |
| A19TP1028 | 214-0579-00 | | | TERM,TEST POINT:BRS CD PL | 80009 | 214-0579-00 |
| A19TP1034 | 214-0579-00 | | | TERM,TEST POINT:BRS CD PL | 80009 | 214-0579-00 |
| A19TP1058 | 214-0579-00 | | | TERM,TEST POINT:BRS CD PL | 80009 | 214-0579-00 |
| A19TP1078 | 214-0579-00 | | | TERM,TEST POINT:BRS CD PL | 80009 | 214-0579-00 |
| A19U924 | 156-0048-00 | | | MICROCIRCUIT,LI:FIVE NPN TRANSISTOR ARRAY | 02735 | CA3046 |
| A19U962 | 155-0173-05 | | | MICROCIRCUIT,DI:CHANNEL SWITCH | 80009 | 155-0173-05 |
| A19U974 | 156-1149-00 | | | MICROCIRCUIT,LI:OPERATIONAL AMP,JFET INPUT | 27014 | LF351N/GLEA134 |
| A19U1006 | 156-0067-00 | | | MICROCIRCUIT,LI:OPERATIONAL AMPLIFIER | 04713 | MC1741CP1 |
| A19U1014 | 156-0158-00 | | | MICROCIRCUIT,LI:DUAL OPERATIONAL AMPLIFIER | 18324 | MC1458N |
| A19U1018 | 155-0179-00 | | | MICROCIRCUIT,LI:CLAMP | 80009 | 155-0179-00 |
| A19U1082 | 155-0175-05 | | | MICROCIRCUIT,LI:AMPLIFIER,M178 | | |
| A19U1094 | 155-0178-00 | | | MICROCIRCUIT,LI:HORIZONTAL OUTPUT | 80009 | 155-0178-00 |
| A19VR1005 | 152-0278-00 | | | SEMICOND DEVICE:ZENER,0.4W,3V,5% | 04713 | SZG35009K20 |
| A19VR1082 | 152-0395-00 | | | SEMICOND DEVICE:ZENER,0.4W,4.3V,5% | 14552 | TD332317 |
| A19W913 | 131-0566-00 | | | BUS CONDUCTOR:DUMMY RES,2.375,22 AWG | 57668 | JWW-0200E0 |
| A19W932 | 131-0566-00 | | | BUS CONDUCTOR:DUMMY RES,2.375,22 AWG | 57668 | JWW-0200E0 |
| A19W933 | 131-0566-00 | | | BUS CONDUCTOR:DUMMY RES,2.375,22 AWG | 57668 | JWW-0200E0 |
| A19W934 | 131-0566-00 | | | BUS CONDUCTOR:DUMMY RES,2.375,22 AWG | 57668 | JWW-0200E0 |
| A19W961 | 131-0566-00 | | | BUS CONDUCTOR:DUMMY RES,2.375,22 AWG | 57668 | JWW-0200E0 |
| A19W962 | 131-0566-00 | | | BUS CONDUCTOR:DUMMY RES,2.375,22 AWG | 57668 | JWW-0200E0 |
| A19W963 | 131-0566-00 | | | BUS CONDUCTOR:DUMMY RES,2.375,22 AWG | 57668 | JWW-0200E0 |
| A19W965 | 131-0566-00 | | | BUS CONDUCTOR:DUMMY RES,2.375,22 AWG | 57668 | JWW-0200E0 |
| A19W966 | 131-0566-00 | | | BUS CONDUCTOR:DUMMY RES,2.375,22 AWG | 57668 | JWW-0200E0 |
| A19W969 | 131-0566-00 | | | BUS CONDUCTOR:DUMMY RES,2.375,22 AWG | 57668 | JWW-0200E0 |
| A19W992 | 131-0566-00 | | | BUS CONDUCTOR:DUMMY RES,2.375,22 AWG | 57668 | JWW-0200E0 |
| A19W999 | 131-0566-00 | | | BUS CONDUCTOR:DUMMY RES,2.375,22 AWG | 57668 | JWW-0200E0 |
| A19W1002 | 131-0566-00 | | | BUS CONDUCTOR:DUMMY RES,2.375,22 AWG | 57668 | JWW-0200E0 |
| A19W1034 | 131-0566-00 | | | BUS CONDUCTOR:DUMMY RES,2.375,22 AWG | 57668 | JWW-0200E0 |
| A19W1037 | 131-0566-00 | | | BUS CONDUCTOR:DUMMY RES,2.375,22 AWG | 57668 | JWW-0200E0 |
| A19W1084 | 131-0566-00 | | | BUS CONDUCTOR:DUMMY RES,2.375,22 AWG | 57668 | JWW-0200E0 |
| A19W1087 | 131-0566-00 | | | BUS CONDUCTOR:DUMMY RES,2.375,22 AWG | 57668 | JWW-0200E0 |
| A19W1089 | 131-0566-00 | | | BUS CONDUCTOR:DUMMY RES,2.375,22 AWG | 57668 | JWW-0200E0 |
| A19W1095 | 131-0566-00 | | | BUS CONDUCTOR:DUMMY RES,2.375,22 AWG | 57668 | JWW-0200E0 |
| A19A1 | 670-5094-00 | | | CKT BOARD ASSY:HORIZONTAL CRT FLEX CON | 80009 | 670-5094-00 |
| A19A1 | —— —— | | | (NO REPLACEABLE SUBPARTS) | | |



http://manoman.sqhill.com

| Component No. | Tektronix Part No. | Serial/Model No. Eff | Dscont | Name & Description | Mfr Code | Mfr Part Number |
|---|---|---|---|---|---|---|
| A20 | 670-0702-06 | | | CKT BOARD ASSY:GRATICULE LAMPS | 80009 | 670-0702-06 |
| A20DS304 | 150-0097-00 | | | LAMP,INCAND:6.3V,0.2A | 08806 | 7381 |
| A20DS305 | 150-0097-00 | | | LAMP,INCAND:6.3V,0.2A | 08806 | 7381 |
| A20DS306 | 150-0097-00 | | | LAMP,INCAND:6.3V,0.2A | 08806 | 7381 |
| A21 | 670-4774-02 | | | CKT BOARD ASSY:Z AXIS | 80009 | 670-4774-02 |
| A21C1601 | 281-0547-00 | | | CAP.,FXD,CER DI:2.7PF,10%,500V | 04222 | 7001-COJ-2R7C |
| A21C1605 | 281-0773-00 | | | CAP.,FXD,CER DI:0.1UF,20%,50V | 04222 | MA201C103KAA |
| A21C1611 | 281-0547-00 | | | CAP.,FXD,CER DI:2.7PF,10%,500V | 04222 | 7001-COJ-2R7C |
| A21C1615 | 281-0773-00 | | | CAP.,FXD,CER DI:0.1UF,20%,50V | 04222 | MA201C103KAA |
| A21C1619 | 281-0785-00 | | | CAP.,FXD,CER DI:68PF,10%,100V | 04222 | MA101A680KAA |
| A21C1623 | 281-0775-00 | | | CAP.,FXD,CER DI:0.1UF,20%,50V | 04222 | MA205E104MAA |
| A21C1628 | 283-0271-00 | | | CAP.,FXD,CER DI:0.001UF,20%,4000V | 59660 | 0828552Y5SO102M |
| A21C1635 | 281-0158-00 | | | CAP.,VAR,CER D1:7-45PF,25V | 73899 | DVJ-5006 |
| A21C1636 | 283-0159-00 | | | CAP.,FXD,CER DI:18PF,5%,50V | 51642 | 150-050-NPO-180J |
| A21C1638 | 281-0773-00 | | | CAP.,FXD,CER DI:0.1UF,20%,50V | 04222 | MA201C103KAA |
| A21C1642 | 283-0000-00 | | | CAP.,FXD,CER DI:0.001UF,+100-0%,500V | 59660 | 831610Y5U0102P |
| A21C1643 | 290-0745-00 | | | CAP.,FXD,ELCTLT:22UF,+50-10%,25V | 54473 | ECE-A25V22L |
| A21C1644 | 281-0775-00 | | | CAP.,FXD,CER DI:0.1UF,20%,50V | 04222 | MA205E104MAA |
| A21C1645 | 290-0745-00 | | | CAP.,FXD,ELCTLT:22UF,+50-10%,25V | 54473 | ECE-A25V22L |
| A21C1646 | 290-0746-00 | | | CAP.,FXD,ELCTLT:47UF,+50-10%,16V | 55680 | ULA1C470TEA |
| A21C1651 | 281-0158-00 | | | CAP.,VAR,CER D1:7-45PF,25V | 73899 | DVJ-5006 |
| A21C1653 | 281-0773-00 | | | CAP.,FXD,CER DI:0.1UF,20%,50V | 04222 | MA201C103KAA |
| A21C1656 | 281-0773-00 | | | CAP.,FXD,CER DI:0.1UF,20%,50V | 04222 | MA201C103KAA |
| A21C1660 | 281-0557-00 | | | CAP.,FXD,CER DI:1.8PF,10%,500V | 04222 | 7001-COK-1R8B |
| A21C1663 | 281-0158-00 | | | CAP.,VAR,CER D1:7-45PF,25V | 73899 | DVJ-5006 |
| A21C1664 | 281-0773-00 | | | CAP.,FXD,CER DI:0.1UF,20%,50V | 04222 | MA201C103KAA |
| A21C1665 | 281-0791-00 | | | CAP.,FXD,CER DI:270PF,10%,100V | 04222 | MA101C271KAA |
| A21C1671 | 281-0773-00 | | | CAP.,FXD,CER DI:0.1UF,20%,50V | 04222 | MA201C103KAA |
| A21C1672 | 283-0003-00 | | | CAP.,FXD,CER DI:0.01UF,+80-20%,150V | 59821 | D103Z40Z5UJDCEX |
| A21C1675 | 281-0773-00 | | | CAP.,FXD,CER DI:0.1UF,20%,50V | 04222 | MA201C103KAA |
| A21C1676 | 281-0788-00 | | | CAP.,FXD,CER DI:470PF,10%,100V | 96733 | R3015 |
| A21C1677 | 283-0346-00 | | | CAP.,FXD,CER DI:0.47UF,+80-20%,100V | 72982 | 8131-M100F474Z |
| A21C1680 | 283-0000-00 | | | CAP.,FXD,CER DI:0.001UF,+100-0%,500V | 59660 | 831610Y5U0102P |
| A21C1681 | 283-0271-00 | | | CAP.,FXD,CER DI:0.001UF,20%,4000V | 59660 | 0828552Y5SO102M |
| A21C1687 | 283-0271-00 | | | CAP.,FXD,CER DI:0.001UF,20%,4000V | 59660 | 0828552Y5SO102M |
| A21C1692 | 281-0773-00 | | | CAP.,FXD,CER DI:0.1UF,20%,50V | 04222 | MA201C103KAA |
| A21C1694 | 283-0271-00 | | | CAP.,FXD,CER DI:0.001UF,20%,4000V | 59660 | 0828552Y5SO102M |
| A21CR1600 | 152-0141-02 | | | SEMICOND DVC,DI:SW,SI,30V,150MA,30V,DO-35 | 12969 | NDP0263 (1N4152) |
| A21CR1607 | 152-0141-02 | | | SEMICOND DVC,DI:SW,SI,30V,150MA,30V,DO-35 | 12969 | NDP0263 (1N4152) |
| A21CR1608 | 152-0141-02 | | | SEMICOND DVC,DI:SW,SI,30V,150MA,30V,DO-35 | 12969 | NDP0263 (1N4152) |
| A21CR1609 | 152-0141-02 | | | SEMICOND DVC,DI:SW,SI,30V,150MA,30V,DO-35 | 12969 | NDP0263 (1N4152) |
| A21CR1618 | 152-0141-02 | | | SEMICOND DVC,DI:SW,SI,30V,150MA,30V,DO-35 | 12969 | NDP0263 (1N4152) |
| A21CR1623 | 152-0574-00 | | | SEMICOND DEVICE:SILICON,120V,0.15A | 14433 | WG1308 |
| A21CR1624 | 152-0141-02 | | | SEMICOND DVC,DI:SW,SI,30V,150MA,30V,DO-35 | 12969 | NDP0263 (1N4152) |
| A21CR1649 | 152-0141-02 | | | SEMICOND DVC,DI:SW,SI,30V,150MA,30V,DO-35 | 12969 | NDP0263 (1N4152) |
| A21CR1665 | 152-0141-02 | | | SEMICOND DVC,DI:SW,SI,30V,150MA,30V,DO-35 | 12969 | NDP0263 (1N4152) |
| A21CR1666 | 152-0141-02 | | | SEMICOND DVC,DI:SW,SI,30V,150MA,30V,DO-35 | 12969 | NDP0263 (1N4152) |
| A21CR1675 | 152-0574-00 | | | SEMICOND DEVICE:SILICON,120V,0.15A | 14433 | WG1308 |
| A21CR1676 | 152-0141-02 | | | SEMICOND DVC,DI:SW,SI,30V,150MA,30V,DO-35 | 12969 | NDP0263 (1N4152) |
| A21CR1677 | 152-0574-00 | | | SEMICOND DEVICE:SILICON,120V,0.15A | 14433 | WG1308 |



http://manoman.sqhill.com

| Component No. | Tektronix Part No. | Serial/Model No. Eff | Dscont | Name & Description | Mfr Code | Mfr Part Number |
|---|---|---|---|---|---|---|
| A21CR1678 | 152-0574-00 | | | SEMICOND DEVICE:SILICON,120V,0.15A | 14433 | WG1308 |
| A21CR1688 | 152-0141-02 | | | SEMICOND DVC,DI:SW,SI,30V,150MA,30V,DO-35 | 12969 | NDP0263 (1N4152) |
| A21DS1682 | 150-0030-00 | | | LAMP,GLOW:NEON,T-2,60 TO 90 VOLTS | 74276 | NE2V-T |
| A21DS1687 | 150-1068-00 | | | LT EMITTING DIO:RED | 50434 | HLMP-6320 |
| A21J1606 | 131-1003-00 | | | CONN,RCPT,ELEC:CKT BD MT,3 PRONG | 80009 | 131-1003-00 |
| A21J1632 | 131-1003-00 | | | CONN,RCPT,ELEC:CKT BD MT,3 PRONG | 80009 | 131-1003-00 |
| A21L1627 | 108-0215-00 | | | COIL,RF:1.1UH | 80009 | 108-0215-00 |
| A21L1643 | 108-0543-00 | | | COIL,RF:FIXED,1.1UH | 80009 | 108-0543-00 |
| A21L1645 | 108-0543-00 | | | COIL,RF:FIXED,1.1UH | 80009 | 108-0543-00 |
| A21LR1644 | 108-0537-00 | | | COIL,RF:200UH | 80009 | 108-0537-00 |
| A21P1602 | 131-0608-00 | | | TERMINAL,PIN:0.365 L X 0.025 PH BRZ GOLD | 22526 | 48283-036 |
| A21P1602 | —— —— | | | (QUANTITY OF 3) | | |
| A21P1603 | 131-0589-00 | | | TERMINAL,PIN:0.46 L X 0.025 SQ | 22526 | 48283-029 |
| A21P1605 | 131-0608-00 | | | TERMINAL,PIN:0.365 L X 0.025 PH BRZ GOLD | 22526 | 48283-036 |
| A21P1605 | —— —— | | | (QUANTITY OF 8) | | |
| A21P1609 | 131-0608-00 | | | TERMINAL,PIN:0.365 L X 0.025 PH BRZ GOLD | 22526 | 48283-036 |
| A21P1609 | —— —— | | | (QUANTITY OF 4) | | |
| A21Q1603 | 151-0438-00 | | | TRANSISTOR:SILICON,PNP,SEL FROM SPS692 | 80009 | 151-0438-00 |
| A21Q1607 | 151-0192-00 | | | TRANSISTOR:SELECTED | 04713 | SPS8801 |
| A21Q1608 | 151-0438-00 | | | TRANSISTOR:SILICON,PNP,SEL FROM SPS692 | 80009 | 151-0438-00 |
| A21Q1617 | 151-0472-00 | | | TRANSISTOR:SILICON,NPN | 51984 | NE41632B |
| A21Q1618 | 151-0438-00 | | | TRANSISTOR:SILICON,PNP,SEL FROM SPS692 | 80009 | 151-0438-00 |
| A21Q1620 | 151-0472-00 | | | TRANSISTOR:SILICON,NPN | 51984 | NE41632B |
| A21Q1626 | 151-0427-00 | | | TRANSISTOR:SILICON,NPN | 07263 | S39287 |
| A21Q1629 | 151-0438-00 | | | TRANSISTOR:SILICON,PNP,SEL FROM SPS692 | 80009 | 151-0438-00 |
| A21Q1632 | 151-0438-00 | | | TRANSISTOR:SILICON,PNP,SEL FROM SPS692 | 80009 | 151-0438-00 |
| A21Q1644 | 151-0190-00 | | | TRANSISTOR:NPN,SI,TO-92 | 04713 | SPS7969 |
| A21Q1648 | 151-0438-00 | | | TRANSISTOR:SILICON,PNP,SEL FROM SPS692 | 80009 | 151-0438-00 |
| A21Q1652 | 151-0441-00 | | | TRANSISTOR:SILICON,NPN | 04713 | SRF501 |
| A21Q1658 | 151-0438-00 | | | TRANSISTOR:SILICON,PNP,SEL FROM SPS692 | 80009 | 151-0438-00 |
| A21Q1664 | 151-0438-00 | | | TRANSISTOR:SILICON,PNP,SEL FROM SPS692 | 80009 | 151-0438-00 |
| A21Q1666 | 151-0190-00 | | | TRANSISTOR:NPN,SI,TO-92 | 04713 | SPS7969 |
| A21Q1668 | 151-0659-00 | | | TRANSISTOR:SILICON,NPN | 01281 | LT 1839 |
| A21Q1672 | 151-0103-00 | | | TRANSISTOR:SILICON,NPN | 80009 | 151-0103-00 |
| A21Q1676 | 151-0659-00 | | | TRANSISTOR:SILICON,NPN | 01281 | LT 1839 |
| A21Q1687 | 151-0444-00 | | | TRANSISTOR:SILICON,NPN | 04713 | SPS797 |
| A21R1600 | 315-0202-00 | | | RES.,FXD,CMPSN:2K OHM,5%,0.25W | 57668 | NTR25J-E02K0 |
| A21R1601 | 315-0101-00 | | | RES.,FXD,CMPSN:100 OHM,5%,0.25W | 57668 | NTR25J-E 100E |
| A21R1602 | 321-0064-00 | | | RES.,FXD,FILM:45.3 OHM,1%,0.125W | 91637 | CMF55116G45R30F |
| A21R1603 | 315-0510-04 | | | RES.,FXD,CMPSN:51 OHM,5%,0.25 W | 01121 | CB5105 |
| A21R1604 | 315-0330-00 | | | RES.,FXD,CMPSN:33 OHM,5%,0.25W | 57668 | NTR25J-E 33E |
| A21R1605 | 315-0101-00 | | | RES.,FXD,CMPSN:100 OHM,5%,0.25W | 57668 | NTR25J-E 100E |
| A21R1606 | 321-0125-00 | | | RES.,FXD,FILM:196 OHM,1%,0.125W | 91637 | CMF55116G196R0F |
| A21R1607 | 321-0234-00 | | | RES.,FXD,FILM:2.67K OHM,1%,0.125W | 91637 | MFF1816G26700F |
| A21R1608 | 321-0225-00 | | | RES.,FXD,FILM:2.15K OHM,1%,0.125W | 91637 | MFF1816G21500F |
| A21R1610 | 321-0223-00 | | | RES.,FXD,FILM:2.05K OHM,1%,0.125W | 91637 | MFF1816G20500F |
| A21R1611 | 315-0151-00 | | | RES.,FXD,CMPSN:150 OHM,5%,0.25W | 57668 | NTR25J-E150E |
| A21R1612 | 321-0064-00 | | | RES.,FXD,FILM:45.3 OHM,1%,0.125W | 91637 | CMF55116G45R30F |
| A21R1613 | 321-0196-00 | | | RES.,FXD,FILM:1.07K OHM,1%,0.125W | 91637 | CMF55116G10700F |
| A21R1614 | 315-0330-00 | | | RES.,FXD,CMPSN:33 OHM,5%,0.25W | 57668 | NTR25J-E 33E |
| A21R1615 | 321-0270-00 | | | RES.,FXD,FILM:6.34K OHM,1%,0.125W | 91637 | CMF55116G63400F |
| A21R1616 | 321-0158-00 | | | RES.,FXD,FILM:432 OHM,1%,0.125W | 91637 | CMF55116G432R0F |
| A21R1617 | 321-0177-00 | | | RES.,FXD,FILM:681 OHM,1%,0.125W | 57668 | RB14FXE681E |
| A21R1618 | 315-0510-04 | | | RES.,FXD,CMPSN:51 OHM,5%,0.25 W | 01121 | CB5105 |



http://manoman.sqhill.com

| Component No. | Tektronix Part No. | Serial/Model No. Eff | Dscont | Name & Description | Mfr Code | Mfr Part Number |
|---|---|---|---|---|---|---|
| A21R1619 | 321-0074-00 | | | RES.,FXD,FILM:57.6 OHM,1%,0.125W | 91637 | CMF55116G57R60F |
| A21R1620 | 322-0126-00 | | | RES.,FXD,FILM:200 OHM,1%,0.25W | 91637 | MFF1421G200R0F |
| A21R1621 | 321-0143-00 | | | RES.,FXD,FILM:301 OHM,1%,0.125W | 91637 | CMF55116G301R0F |
| A21R1622 | 311-1223-00 | | | RES.,VAR,NONWIR:TRMR,250 OHM,0.5W | 73138 | 72-5-0 |
| A21R1623 | 315-0681-03 | | | RES.,FXD,CMPSN:680 OHM,5%,0.25W | 01121 | CB6815 |
| A21R1624 | 315-0181-00 | | | RES.,FXD,CMPSN:180 OHM,5%,0.25W | 57668 | NTR25J-E180E |
| A21R1625 | 321-0242-00 | | | RES.,FXD,FILM:3.24K OHM,1%,0.125W | 24546 | CT55 3241 F |
| A21R1626 | 311-1222-00 | | | RES.,VAR,NONWIR:100 OHM,20%,0.50W | 32997 | 3386F-T04-101 |
| A21R1627 | 315-0271-00 | | | RES.,FXD,CMPSN:270 OHM,5%,0.25W | 01121 | CB2715 |
| A21R1628 | 315-0430-02 | | | RES.,FXD,CMPSN:43 OHM,5%,0.25W | 01121 | CB4305 |
| A21R1629 | 315-0103-03 | | | RES.,FXD,CMPSN:10K OHM,5%,0.25W | 01121 | CB1035 |
| A21R1630 | 315-0510-04 | | | RES.,FXD,CMPSN:51 OHM,5%,0.25 W | 01121 | CB5105 |
| A21R1632 | 321-0217-00 | | | RES.,FXD,FILM:1.78K OHM,1%,0.125W | 91637 | CMF55116G17800F |
| A21R1633 | 315-0270-00 | | | RES.,FXD,CMPSN:27 OHM,5%,0.25W | 57668 | NTR25J-E 27E |
| A21R1634 | 321-0097-00 | | | RES.,FXD,FILM:100 OHM,1%,0.125W | 91637 | CMF55116G100R0F |
| A21R1635 | 311-1259-00 | | | RES.,VAR,NONWIR:100 OHM,10%,0.50W | 32997 | 3329P-L58-101 |
| A21R1636 | 321-0151-00 | | | RES.,FXD,FILM:365 OHM,1%,0.125W | 91637 | CMF55116G365R0F |
| A21R1637 | 311-1221-00 | | | RES.,VAR,NONWIR:50 OHM,20%,0.50W | 32997 | 3386F-T04-500 |
| A21R1638 | 322-0202-00 | | | RES.,FXD,FILM:1.24K OHM,1%,0.25W | 75042 | CEBT0-1241F |
| A21R1639 | 321-0193-00 | | | RES.,FXD,FILM:1K OHM,1%,0.125W | 19701 | 5043ED1K00F |
| A21R1641 | 315-0103-03 | | | RES.,FXD,CMPSN:10K OHM,5%,0.25W | 01121 | CB1035 |
| A21R1642 | 315-0132-00 | | | RES.,FXD,CMPSN:1.3K OHM,5%,0.25W | 57668 | NTR25J-E01K3 |
| A21R1643 | 315-0333-00 | | | RES.,FXD,CMPSN:33K OHM,5%,0.25W | 57668 | NTR25J-E33K0 |
| A21R1644 | 322-0202-00 | | | RES.,FXD,FILM:1.24K OHM,1%,0.25W | 75042 | CEBT0-1241F |
| A21R1645 | 311-1258-00 | | | RES.,VAR,NONWIR:50 OHM,10%,0.50W | 32997 | 3329P-L58-500 |
| A21R1646 | 321-0112-00 | | | RES.,FXD,FILM:143 OHM,1%,0.125W | 91637 | CMF55116G143R0F |
| A21R1647 | 315-0101-00 | | | RES.,FXD,CMPSN:100 OHM,5%,0.25W | 57668 | NTR25J-E 100E |
| A21R1649 | 321-0126-00 | | | RES.,FXD,FILM:200 OHM,1%,0.125W | 91637 | CMF55116G200R0F |
| A21R1651 | 315-0150-00 | | | RES.,FXD,CMPSN:15 OHM,5%,0.25W | 57668 | NTR25J-E 15E |
| A21R1652 | 321-0108-00 | | | RES.,FXD,FILM:130 OHM,1%,0.125W | 91637 | CMF55116G13000F |
| A21R1656 | 301-0271-00 | | | RES.,FXD,CMPSN:270 OHM,5%,0.5W | 57668 | TR50J-E270E |
| A21R1657 | 315-0220-00 | | | RES.,FXD,CMPSN:22 OHM,5%,0.25W | 57668 | NTR25J-E 22E |
| A21R1658 | 315-0471-00 | | | RES.,FXD,CMPSN:470 OHM,5%,0.25W | 57668 | NTR25J-E470E |
| A21R1659 | 315-0101-00 | | | RES.,FXD,CMPSN:100 OHM,5%,0.25W | 57668 | NTR25J-E 100E |
| A21R1660 | 323-0293-00 | | | RES.,FXD,FILM:11K OHM,1%,0.50W | 75042 | CECT0-1102F |
| A21R1662 | 315-0201-00 | | | RES.,FXD,CMPSN:200 OHM,5%,0.25W | 57668 | NTR25J-E200E |
| A21R1663 | 315-0390-00 | | | RES.,FXD,CMPSN:39 OHM,5%,0.25W | 57668 | NTR25J-E39E0 |
| A21R1664 | 315-0301-00 | | | RES.,FXD,CMPSN:300 OHM,5%,0.25W | 57668 | NTR25J-E300E |
| A21R1665 | 315-0680-00 | | | RES.,FXD,CMPSN:68 OHM,5%,0.25W | 57668 | NTR25J-E68E0 |
| A21R1668 | 315-0510-00 | | | RES.,FXD,CMPSN:51 OHM,5%,0.25W | 57668 | NTR25J-E51E0 |
| A21R1670 | 321-0312-00 | | | RES.,FXD,FILM:17.4K OHM,1%,0.125W | 91637 | MFF1816G17401F |
| A21R1671 | 315-0823-00 | | | RES.,FXD,CMPSN:82K OHM,5%,0.25W | 57668 | NTR25J-E82K |
| A21R1672 | 301-0202-00 | | | RES.,FXD,CMPSN:2K OHM,5%,0.5W | 01121 | EB2025 |
| A21R1673 | 315-0201-00 | | | RES.,FXD,CMPSN:200 OHM,5%,0.25W | 57668 | NTR25J-E200E |
| A21R1674 | 315-0223-00 | | | RES.,FXD,CMPSN:22K OHM,5%,0.25W | 57668 | NTR25J-E 22K |
| A21R1675 | 315-0273-00 | | | RES.,FXD,CMPSN:27K OHM,5%,0.25W | 57668 | NTR25J-E27K0 |
| A21R1676 | 315-0620-00 | | | RES.,FXD,CMPSN:62 OHM,5%,0.25W | 57668 | NTR25J-E 62E |
| A21R1679 | 315-0430-02 | | | RES.,FXD,CMPSN:43 OHM,5%,0.25W | 01121 | CB4305 |
| A21R1680 | 315-0103-03 | | | RES.,FXD,CMPSN:10K OHM,5%,0.25W | 01121 | CB1035 |
| A21R1682 | 315-0105-03 | | | RES.,FXD,CMPSN:1M OHM,5%,0.25W | 01121 | CB1055 |
| A21R1685 | 315-0105-03 | | | RES.,FXD,CMPSN:1M OHM,5%,0.25W | 01121 | CB1055 |
| A21R1687 | 315-0104-03 | | | RES.,FXD CMPSN:100K OHM,5%,0.25W | 01121 | CB1045 |
| A21R1688 | 315-0103-03 | | | RES.,FXD,CMPSN:10K OHM,5%,0.25W | 01121 | CB1035 |
| A21R1692 | 315-0101-00 | | | RES.,FXD,CMPSN:100 OHM,5%,0.25W | 57668 | NTR25J-E 100E |



http://manoman.sqhill.com

| Component No. | Tektronix Part No. | Serial/Model No. Eff | Dscont | Name & Description | Mfr Code | Mfr Part Number |
|---|---|---|---|---|---|---|
| A21R1694 | 315-0161-02 | | | RES.,FXD,CMPSN:160 OHM,5%,0.25W | 01121 | CB1615 |
| A21T1664 | 120-0487-00 | | | XFMR,TOROID:5 TURNS BIFILAR | 80009 | 120-0487-00 |
| A21TP1628 | 214-0579-00 | | | TERM,TEST POINT:BRS CD PL | 80009 | 214-0579-00 |
| A21TP1672 | 214-0579-00 | | | TERM,TEST POINT:BRS CD PL | 80009 | 214-0579-00 |
| A21TP1678 | 214-0579-00 | | | TERM,TEST POINT:BRS CD PL | 80009 | 214-0579-00 |
| A21TP1687 | 214-0579-00 | | | TERM,TEST POINT:BRS CD PL | 80009 | 214-0579-00 |
| A21TP1688 | 214-0579-00 | | | TERM,TEST POINT:BRS CD PL | 80009 | 214-0579-00 |
| A21VR1653 | 152-0212-00 | | | SEMICOND DEVICE:ZENER,0.5W,9V,5% | 04713 | SZ50646RL |
| A21VR1671 | 152-0580-00 | | | SEMICOND DEVICE:ZENER,0.4W,75V,2% | 04713 | SZ14358RL |
| A21VR1688 | 152-0149-00 | | | SEMICOND DEVICE:ZENER,0.4W,10V,5% | 04713 | SZG35009K3 |



http://manoman.sqhill.com

| Component No. | Tektronix Part No. | Serial/Model No. Eff | Dscont | Name & Description | Mfr Code | Mfr Part Number |
|---|---|---|---|---|---|---|
| A22 | 670-8410-00 | | | CKT BOARD ASSY:HIGH VOLTAGE | 80009 | 670-8410-00 |
| A22C1672 | 283-0003-00 | | | CAP.,FXD,CER DI:0.01UF,+80-20%,150V | 59821 | D103Z40Z5UJDCEX |
| A22C1707 | 290-0164-00 | | | CAP.,FXD,ELCTLT:1UF,+50-10%,150V | 56289 | 500D105F150BA7 |
| A22C1708 | 290-0164-00 | | | CAP.,FXD,ELCTLT:1UF,+50-10%,150V | 56289 | 500D105F150BA7 |
| A22C1710 | 283-0105-00 | | | CAP.,FXD,CER DI:0.01UF,+80-20%,2000V | 60705 | 564CBA202IP203ZA |
| A22C1711 | 283-0105-00 | | | CAP.,FXD,CER DI:0.01UF,+80-20%,2000V | 60705 | 564CBA202IP203ZA |
| A22C1712 | 283-0271-00 | | | CAP.,FXD,CER DI:0.001UF,20%,4000V | 59660 | 0828552Y5SO102M |
| A22C1714 | 283-0204-00 | | | CAP.,FXD,CER DI:0.01UF,20%,50V | 96733 | R2676 |
| A22C1715 | 283-0003-00 | | | CAP.,FXD,CER DI:0.01UF,+80-20%,150V | 59821 | D103Z40Z5UJDCEX |
| A22C1722 | 283-0023-00 | | | CAP.,FXD,CER DI:0.1UF,+80-20%,12V | 71590 | 2DDU66B104Z |
| A22C1724 | 283-0003-00 | | | CAP.,FXD,CER DI:0.01UF,+80-20%,150V | 59821 | D103Z40Z5UJDCEX |
| A22C1732 | 281-0814-00 | | | CAP.,FXD,CER DI:100PF,10%,100V | 04222 | GC101A101K |
| A22C1735 | 283-0003-00 | | | CAP.,FXD,CER DI:0.01UF,+80-20%,150V | 59821 | D103Z40Z5UJDCEX |
| A22C1736 | 285-0894-00 | | | CAP.,FXD,PLSTC:5UF,5%,50V | 56289 | LP66A1A505J002 |
| A22C1747 | 283-0092-00 | | | CAP.,FXD,CER DI:0.03UF,+80-20%,200V | 59660 | 845-534Z5U0303Z |
| A22C1749 | 283-0000-00 | | | CAP.,FXD,CER DI:0.001UF,+100-0%,500V | 59660 | 831610Y5U0102P |
| A22C1750 | 283-0105-00 | | | CAP.,FXD,CER DI:0.01UF,+80-20%,2000V | 60705 | 564CBA202IP203ZA |
| A22C1752 | 283-0271-00 | | | CAP.,FXD,CER DI:0.001UF,20%,4000V | 59660 | 0828552Y5SO102M |
| A22C1754 | 283-0271-00 | | | CAP.,FXD,CER DI:0.001UF,20%,4000V | 59660 | 0828552Y5SO102M |
| A22C1755 | 283-0271-00 | | | CAP.,FXD,CER DI:0.001UF,20%,4000V | 59660 | 0828552Y5SO102M |
| A22C1756 | 283-0271-00 | | | CAP.,FXD,CER DI:0.001UF,20%,4000V | 59660 | 0828552Y5SO102M |
| A22C1764 | 283-0272-00 | | | CAP.,FXD,CER DI:0.0068UF,30%,4000V | 59660 | 3888 510 Y5S0682 |
| A22C1770 | 290-0767-00 | | | CAP.,FXD,ELCTLT:4.7UF,+75-10%,160V | 56289 | 5020228 |
| A22C1772 | 283-0010-00 | | | CAP.,FXD,CER DI:0.05UF,+100-20%,50V | 04222 | ADIVSE |
| A22C1774 | 290-0767-00 | | | CAP.,FXD,ELCTLT:4.7UF,+75-10%,160V | 56289 | 5020228 |
| A22C1775 | 283-0203-00 | | | CAP.,FXD,CER DI:0.47UF,20%,50V | 04222 | SR305SC474MAA |
| A22C1776 | 283-0177-00 | | | CAP.,FXD,CER DI:1UF,+80-20%,25V | 04222 | SR302E105ZAA |
| A22C1778 | 283-0006-00 | | | CAP.,FXD,CER DI:0.02UF,+80-20%,500V | 59660 | 0841545Z5V00203Z |
| A22C1783 | 283-0108-00 | | | CAP.,FXD,CER DI:220PF,10%,200V | 56289 | 1C10C0G221K200B |
| A22C1785 | 283-0032-00 | | | CAP.,FXD,CER DI:470PF,5%,500V | 59660 | 0831085Z5E00471J |
| A22C1786 | 283-0272-00 | | | CAP.,FXD,CER DI:0.0068UF,30%,4000V | 59660 | 3888 510 Y5S0682 |
| A22C1791 | 283-0003-00 | | | CAP.,FXD,CER DI:0.01UF,+80-20%,150V | 59821 | D103Z40Z5UJDCEX |
| A22C1792 | 283-0271-00 | | | CAP.,FXD,CER DI:0.001UF,20%,4000V | 59660 | 0828552Y5SO102M |
| A22C1793 | 283-0271-00 | | | CAP.,FXD,CER DI:0.001UF,20%,4000V | 59660 | 0828552Y5SO102M |
| A22C1796 | 283-0003-00 | | | CAP.,FXD,CER DI:0.01UF,+80-20%,150V | 59821 | D103Z40Z5UJDCEX |
| A22C1797 | 283-0003-00 | | | CAP.,FXD,CER DI:0.01UF,+80-20%,150V | 59821 | D103Z40Z5UJDCEX |
| A22C1803 | 283-0003-00 | | | CAP.,FXD,CER DI:0.01UF,+80-20%,150V | 59821 | D103Z40Z5UJDCEX |
| A22C1807 | 283-0000-00 | | | CAP.,FXD,CER DI:0.001UF,+100-0%,500V | 59660 | 831610Y5U0102P |
| A22C1818 | 283-0271-00 | | | CAP.,FXD,CER DI:0.001UF,20%,4000V | 59660 | 0828552Y5SO102M |
| A22C1819 | 283-0271-00 | | | CAP.,FXD,CER DI:0.001UF,20%,4000V | 59660 | 0828552Y5SO102M |
| A22C1820 | 283-0271-00 | | | CAP.,FXD,CER DI:0.001UF,20%,4000V | 59660 | 0828552Y5SO102M |
| A22C1821 | 283-0092-00 | | | CAP.,FXD,CER DI:0.03UF,+80-20%,200V | 59660 | 845-534Z5U0303Z |
| A22C1831 | 283-0271-00 | | | CAP.,FXD,CER DI:0.001UF,20%,4000V | 59660 | 0828552Y5SO102M |
| A22C1834 | 283-0000-00 | | | CAP.,FXD,CER DI:0.001UF,+100-0%,500V | 59660 | 831610Y5U0102P |
| A22C1839 | 283-0000-00 | | | CAP.,FXD,CER DI:0.001UF,+100-0%,500V | 59660 | 831610Y5U0102P |
| A22C1842 | 283-0000-00 | | | CAP.,FXD,CER DI:0.001UF,+100-0%,500V | 59660 | 831610Y5U0102P |
| A22C1846 | 283-0187-00 | | | CAP.,FXD,CER DI:0.047UF,10%,400V | 72982 | 8131N401X5R0473K |
| A22C1849 | 283-0271-00 | | | CAP.,FXD,CER DI:0.001UF,20%,4000V | 59660 | 0828552Y5SO102M |
| A22C1850 | 283-0271-00 | | | CAP.,FXD,CER DI:0.001UF,20%,4000V | 59660 | 0828552Y5SO102M |
| A22C1852 | 283-0271-00 | | | CAP.,FXD,CER DI:0.001UF,20%,4000V | 59660 | 0828552Y5SO102M |
| A22C1860 | 283-0271-00 | | | CAP.,FXD,CER DI:0.001UF,20%,4000V | 59660 | 0828552Y5SO102M |
| A22C1862 | 283-0271-00 | | | CAP.,FXD,CER DI:0.001UF,20%,4000V | 59660 | 0828552Y5SO102M |
| A22C1870 | 283-0271-00 | | | CAP.,FXD,CER DI:0.001UF,20%,4000V | 59660 | 0828552Y5SO102M |



http://manoman.sqhill.com

| Component No. | Tektronix Part No. | Serial/Model No. Eff | Dscont | Name & Description | Mfr Code | Mfr Part Number |
|---|---|---|---|---|---|---|
| A22C1872 | 283-0271-00 | | | CAP.,FXD,CER DI:0.001UF,20%,4000V | 59660 | 0828552Y5SO102M |
| A22C1877 | 283-0271-00 | | | CAP.,FXD,CER DI:0.001UF,20%,4000V | 59660 | 0828552Y5SO102M |
| A22C1880 | 283-0271-00 | | | CAP.,FXD,CER DI:0.001UF,20%,4000V | 59660 | 0828552Y5SO102M |
| A22C1890 | 283-0003-00 | | | CAP.,FXD,CER DI:0.01UF,+80-20%,150V | 59821 | D103Z40Z5UJDCEX |
| A22C1893 | 283-0003-00 | | | CAP.,FXD,CER DI:0.01UF,+80-20%,150V | 59821 | D103Z40Z5UJDCEX |
| A22CR1707 | 152-0107-00 | | | SEMICOND DEVICE:SILICON,400V,400MA | 12969 | G727 |
| A22CR1708 | 152-0107-00 | | | SEMICOND DEVICE:SILICON,400V,400MA | 12969 | G727 |
| A22CR1710 | 152-0429-00 | | | SEMICOND DEVICE:SILICON,5000V,10MA | 83003 | VG5X-1 |
| A22CR1711 | 152-0429-00 | | | SEMICOND DEVICE:SILICON,5000V,10MA | 83003 | VG5X-1 |
| A22CR1714 | 152-0141-02 | | | SEMICOND DVC,DI:SW,SI,30V,150MA,30V,DO-35 | 12969 | NDP0263 (1N4152) |
| A22CR1715 | 152-0141-02 | | | SEMICOND DVC,DI:SW,SI,30V,150MA,30V,DO-35 | 12969 | NDP0263 (1N4152) |
| A22CR1724 | 152-0141-02 | | | SEMICOND DVC,DI:SW,SI,30V,150MA,30V,DO-35 | 12969 | NDP0263 (1N4152) |
| A22CR1736 | 152-0141-02 | | | SEMICOND DVC,DI:SW,SI,30V,150MA,30V,DO-35 | 12969 | NDP0263 (1N4152) |
| A22CR1747 | 152-0242-00 | | | SEMICOND DVC:SIG,SI,225V,0.2A,DO-7 | 07263 | FDH5004 |
| A22CR1749 | 152-0242-00 | | | SEMICOND DVC:SIG,SI,225V,0.2A,DO-7 | 07263 | FDH5004 |
| A22CR1752 | 152-0409-00 | | | SEMICOND DEVICE:SILICON,12,000V,5MA | 83003 | VG12X-1 |
| A22CR1753 | 152-0409-00 | | | SEMICOND DEVICE:SILICON,12,000V,5MA | 83003 | VG12X-1 |
| A22CR1762 | 152-0409-00 | | | SEMICOND DEVICE:SILICON,12,000V,5MA | 83003 | VG12X-1 |
| A22CR1763 | 152-0409-00 | | | SEMICOND DEVICE:SILICON,12,000V,5MA | 83003 | VG12X-1 |
| A22CR1771 | 152-0586-00 | | | SEMICOND DEVICE:SILICON,600V,500MA | 14936 | RGP10J-011 |
| A22CR1772 | 152-0586-00 | | | SEMICOND DEVICE:SILICON,600V,500MA | 14936 | RGP10J-011 |
| A22CR1774 | 152-0141-02 | | | SEMICOND DVC,DI:SW,SI,30V,150MA,30V,DO-35 | 12969 | NDP0263 (1N4152) |
| A22CR1775 | 152-0141-02 | | | SEMICOND DVC,DI:SW,SI,30V,150MA,30V,DO-35 | 12969 | NDP0263 (1N4152) |
| A22CR1776 | 152-0586-00 | | | SEMICOND DEVICE:SILICON,600V,500MA | 14936 | RGP10J-011 |
| A22CR1778 | 152-0586-00 | | | SEMICOND DEVICE:SILICON,600V,500MA | 14936 | RGP10J-011 |
| A22CR1788 | 152-0242-00 | | | SEMICOND DVC:SIG,SI,225V,0.2A,DO-7 | 07263 | FDH5004 |
| A22CR1789 | 152-0242-00 | | | SEMICOND DVC:SIG,SI,225V,0.2A,DO-7 | 07263 | FDH5004 |
| A22CR1792 | 152-0242-00 | | | SEMICOND DVC:SIG,SI,225V,0.2A,DO-7 | 07263 | FDH5004 |
| A22CR1794 | 152-0242-00 | | | SEMICOND DVC:SIG,SI,225V,0.2A,DO-7 | 07263 | FDH5004 |
| A22CR1803 | 152-0141-02 | | | SEMICOND DVC,DI:SW,SI,30V,150MA,30V,DO-35 | 12969 | NDP0263 (1N4152) |
| A22CR1804 | 152-0141-02 | | | SEMICOND DVC,DI:SW,SI,30V,150MA,30V,DO-35 | 12969 | NDP0263 (1N4152) |
| A22CR1816 | 152-0242-00 | | | SEMICOND DVC:SIG,SI,225V,0.2A,DO-7 | 07263 | FDH5004 |
| A22CR1818 | 152-0242-00 | | | SEMICOND DVC:SIG,SI,225V,0.2A,DO-7 | 07263 | FDH5004 |
| A22CR1819 | 152-0242-00 | | | SEMICOND DVC:SIG,SI,225V,0.2A,DO-7 | 07263 | FDH5004 |
| A22CR1820 | 152-0242-00 | | | SEMICOND DVC:SIG,SI,225V,0.2A,DO-7 | 07263 | FDH5004 |
| A22CR1835 | 152-0141-02 | | | SEMICOND DVC,DI:SW,SI,30V,150MA,30V,DO-35 | 12969 | NDP0263 (1N4152) |
| A22CR1838 | 152-0141-02 | | | SEMICOND DVC,DI:SW,SI,30V,150MA,30V,DO-35 | 12969 | NDP0263 (1N4152) |
| A22CR1842 | 152-0141-02 | | | SEMICOND DVC,DI:SW,SI,30V,150MA,30V,DO-35 | 12969 | NDP0263 (1N4152) |
| A22DS1792 | 150-0030-00 | | | LAMP,GLOW:NEON,T-2,60 TO 90 VOLTS | 74276 | NE2V-T |
| A22DS1794 | 150-0030-00 | | | LAMP,GLOW:NEON,T-2,60 TO 90 VOLTS | 74276 | NE2V-T |
| A22DS1818 | 150-0030-00 | | | LAMP,GLOW:NEON,T-2,60 TO 90 VOLTS | 74276 | NE2V-T |
| A22DS1819 | 150-0030-00 | | | LAMP,GLOW:NEON,T-2,60 TO 90 VOLTS | 74276 | NE2V-T |
| A22DS1820 | 150-0030-00 | | | LAMP,GLOW:NEON,T-2,60 TO 90 VOLTS | 74276 | NE2V-T |
| A22DS1842 | 150-0030-00 | | | LAMP,GLOW:NEON,T-2,60 TO 90 VOLTS | 74276 | NE2V-T |
| A22DS1844 | 150-0030-00 | | | LAMP,GLOW:NEON,T-2,60 TO 90 VOLTS | 74276 | NE2V-T |
| A22DS1846 | 150-0030-00 | | | LAMP,GLOW:NEON,T-2,60 TO 90 VOLTS | 74276 | NE2V-T |
| A22DS1848 | 150-0030-00 | | | LAMP,GLOW:NEON,T-2,60 TO 90 VOLTS | 74276 | NE2V-T |
| A22P1700 | — — | | | (SEE MAINT SECTION FOR SQ PIN REPL) | | |
| A22P1700 | — — | | | (ALL) | | |
| A22P1800 | — — | | | (SEE MAINT SECTION FOR SQ PIN REPL) | | |
| A22P1800 | — — | | | (ALL) | | |
| A22Q1708 | 151-0150-00 | | | TRANSISTOR:SILICON,NPN | 80009 | 151-0150-00 |
| A22Q1724 | 151-0453-00 | | | TRANSISTOR:PNP,SI,TO-92 | 80009 | 151-0453-00 |
| A22Q1742 | 151-0350-00 | | | TRANSISTOR:SILICON,PNP | 04713 | SPS6700 |



http://manoman.sqhill.com

| Component No. | Tektronix Part No. | Serial/Model No. Eff | Dscont | Name & Description | Mfr Code | Mfr Part Number |
|---|---|---|---|---|---|---|
| A22Q1748 | 151-0350-00 | | | TRANSISTOR:SILICON,PNP | 04713 | SPS6700 |
| A22Q1784 | 151-0279-00 | | | TRANSISTOR:SILICON,NPN | 04713 | SS2821 |
| A22Q1835 | 151-0126-00 | | | TRANSISTOR:SILICON,NPN | 04713 | ST1046 |
| A22Q1838 | 151-0126-00 | | | TRANSISTOR:SILICON,NPN | 04713 | ST1046 |
| A22Q1842 | 151-0350-00 | | | TRANSISTOR:SILICON,PNP | 04713 | SPS6700 |
| A22R1706 | 315-0472-00 | | | RES.,FXD,CMPSN:4.7K OHM,5%,0.25W | 57668 | NTR25J-E04K7 |
| A22R1708 | 315-0102-03 | | | RES.,FXD,CMPSN:1K OHM,5%,0.25W | 01121 | CB1025 |
| A22R1709 | 315-0123-00 | | | RES.,FXD,CMPSN:12K OHM,5%,0.25W | 57668 | NTR25J-E12K0 |
| A22R1712 | 301-0164-01 | | | RES.,FXD,CMPSN:160K OHM,5%,0.5W | 01121 | EB1645 |
| A22R1713 | 321-0414-00 | | | RES.,FXD,FILM:200K OHM,1%,0.125W | 91637 | MFF1816G20002F |
| A22R1714 | 321-0138-00 | | | RES.,FXD,FILM:267 OHM,1%,0.125W | 91637 | CMF55116G267R0F |
| A22R1716 | 323-0793-07 | | | RES.,FXD,FILM:2.5 MEG OHM,0.1%,0.5W | 91637 | HFF129C250003B |
| A22R1717 | 323-0793-07 | | | RES.,FXD,FILM:2.5 MEG OHM,0.1%,0.5W | 91637 | HFF129C250003B |
| A22R1718 | 323-0793-07 | | | RES.,FXD,FILM:2.5 MEG OHM,0.1%,0.5W | 91637 | HFF129C250003B |
| A22R1719 | 321-0428-00 | | | RES.,FXD,FILM:280K OHM,1%,0.125W | 91637 | MFF1816G28002F |
| A22R1720 | 311-1232-00 | | | RES.,VAR,NONWIR:50K OHM,20%,0.50W | 32997 | 3386F-T04-503 |
| A22R1722 | 321-0318-00 | | | RES.,FXD,FILM:20K OHM,1%,0.125W | 91637 | MFF1816G20001F |
| A22R1724 | 321-0254-00 | | | RES.,FXD,FILM:4.32K OHM,1%,0.125W | 91637 | MFF1816G43200F |
| A22R1725 | 301-0104-02 | | | RES.,FXD,CMPSN:100K OHM,5%,0.5W | 01121 | EB1045 |
| A22R1726 | 301-0104-02 | | | RES.,FXD,CMPSN:100K OHM,5%,0.5W | 01121 | EB1045 |
| A22R1732 | 321-0280-00 | | | RES.,FXD,FILM:8.06K OHM,1%,0.125W | 91637 | MFF1816G80600F |
| A22R1733 | 315-0755-00 | | | RES.,FXD,CMPSN:7.5M OHM,5%,0.25W | 01121 | CB7555 |
| A22R1734 | 321-0184-00 | | | RES.,FXD,FILM:806 OHM,1%,0.125W | 91637 | CMF55116G806R0F |
| A22R1735 | 321-0269-00 | | | RES.,FXD,FILM:6.19K OHM,1%,0.125W | 91637 | MFF1816G61900F |
| A22R1736 | 315-0566-00 | | | RES.,FXD,CMPSN:56M OHM,5%,0.25W | 01121 | CB5665 |
| A22R1738 | 315-0473-00 | | | RES.,FXD,CMPSN:47K OHM,5%,0.25W | 57668 | NTR25J-E47K0 |
| A22R1741 | 321-0275-00 | | | RES.,FXD,FILM:7.15K OHM,1%,0.125W | 91637 | MFF1816G71500F |
| A22R1742 | 321-0353-00 | | | RES.,FXD,FILM:46.4K OHM,1%,0.125W | 91637 | MFF1816G46401F |
| A22R1743 | 315-0473-00 | | | RES.,FXD,CMPSN:47K OHM,5%,0.25W | 57668 | NTR25J-E47K0 |
| A22R1746 | 311-1232-00 | | | RES.,VAR,NONWIR:50K OHM,20%,0.50W | 32997 | 3386F-T04-503 |
| A22R1747 | 315-0103-03 | | | RES.,FXD,CMPSN:10K OHM,5%,0.25W | 01121 | CB1035 |
| A22R1748 | 315-0103-03 | | | RES.,FXD,CMPSN:10K OHM,5%,0.25W | 01121 | CB1035 |
| A22R1750 | 301-0152-03 | | | RES.,FXD,CMPSN:1.5K OHM,5%,0.5W | 01121 | EB1525 |
| A22R1754 | 323-0540-00 | | | RES.,FXD,FILM:4.12M OHM,1%,0.50W | 91637 | HFF129-G41203F |
| A22R1755 | 301-0106-03 | | | RES.,FXD,CMPSN:10M OHM,5%,0.5W | 01121 | EB1065 |
| A22R1756 | 315-0101-00 | | | RES.,FXD,CMPSN:100 OHM,5%,0.25W | 57668 | NTR25J-E 100E |
| A22R1757 | 321-0044-00 | | | RES.,FXD,FILM:28 OHM,1%,0.125W | 91637 | CMF55116G28R00F |
| A22R1758 | 321-0033-00 | | | RES.,FXD,FILM:21.5 OHM,1%,0.125W | 91637 | CMF55116G21R50F |
| A22R1764 | 301-0103-02 | | | RES.,FXD,CMPSN:10K OHM,5%,0.5W | 01121 | EB1035 |
| A22R1770 | 315-0470-03 | | | RES.,FXD,CMPSN:47 OHM,5%,0.25W | 01121 | CB4705 |
| A22R1771 | 315-0391-00 | | | RES.,FXD,CMPSN:390 OHM,5%,0.25W | 57668 | NTR25J-E390E |
| A22R1772 | 315-0512-00 | | | RES.,FXD,CMPSN:5.1K OHM,5%,0.25W | 57668 | NTR25J-E05K1 |
| A22R1774 | 307-0104-00 | | | RES.,FXD,CMPSN:3.3 OHM,5%,0.25W | 01121 | CB33G5 |
| A22R1776 | 315-0101-00 | | | RES.,FXD,CMPSN:100 OHM,5%,0.25W | 57668 | NTR25J-E 100E |
| A22R1778 | 315-0472-00 | | | RES.,FXD,CMPSN:4.7K OHM,5%,0.25W | 57668 | NTR25J-E04K7 |
| A22R1783 | 315-0331-00 | | | RES.,FXD,CMPSN:330 OHM,5%,0.25W | 57668 | NTR25J-E330E |
| A22R1784 | 315-0102-03 | | | RES.,FXD,CMPSN:1K OHM,5%,0.25W | 01121 | CB1025 |
| A22R1785 | 315-0102-03 | | | RES.,FXD,CMPSN:1K OHM,5%,0.25W | 01121 | CB1025 |
| A22R1788 | 301-0105-01 | | | RES.,FXD,CMPSN:1M OHM,5%,0.5W | 01121 | EB1055 |
| A22R1789 | 301-0105-01 | | | RES.,FXD,CMPSN:1M OHM,5%,0.5W | 01121 | EB1055 |
| A22R1790 | 315-0104-03 | | | RES.,FXD CMPSN:100K OHM,5%,0.25W | 01121 | CB1045 |
| A22R1791 | 315-0151-00 | | | RES.,FXD,CMPSN:150 OHM,5%,0.25W | 57668 | NTR25J-E150E |
| A22R1792 | 315-0103-03 | | | RES.,FXD,CMPSN:10K OHM,5%,0.25W | 01121 | CB1035 |
| A22R1793 | 315-0151-00 | | | RES.,FXD,CMPSN:150 OHM,5%,0.25W | 57668 | NTR25J-E150E |



http://manoman.sqhill.com

| Component No. | Tektronix Part No. | Serial/Model No. Eff | Dscont | Name & Description | Mfr Code | Mfr Part Number |
|---|---|---|---|---|---|---|
| A22R1794 | 315-0183-03 | | | RES.,FXD,CMPSN:18K OHM,5%,0.25W | 01121 | CB1835 |
| A22R1795 | 315-0226-01 | | | RES.,FXD,CMPSN:22M OHM,5%,0.25W | 01121 | CB2265 |
| A22R1796 | 321-0193-00 | | | RES.,FXD,FILM:1K OHM,1%,0.125W | 19701 | 5043ED1K00F |
| A22R1797 | 321-0319-00 | | | RES.,FXD,FILM:20.5K OHM,1%,0.125W | 91637 | MFF1816G20501F |
| A22R1800 | 315-0683-03 | | | RES.,FXD,CMPSN:68K OHM,5%,0.25W | 01121 | CB6835 |
| A22R1802 | 307-0556-00 | | | RES NTWK,FXD FI:HIGH VOLTAGE DIVIDER | 80009 | 307-0556-00 |
| A22R1803 | 315-0204-00 | | | RES.,FXD,CMPSN:200K OHM,5%,0.25W | 57668 | NTR25J-E 200K |
| A22R1804 | 315-0755-00 | | | RES.,FXD,CMPSN:7.5M OHM,5%,0.25W | 01121 | CB7555 |
| A22R1805 | 311-1235-00 | | | RES.,VAR,NONWIR:100K OHM,20%,0.50W | 32997 | 3386F-T04-104 |
| A22R1806 | 321-0983-00 | | | RES.,FXD,FILM:4.5M OHM,1%,0.125W | 91637 | CM110216G45003F |
| A22R1807 | 315-0302-00 | | | RES.,FXD,CMPSN:3K OHM,5%,0.25W | 57668 | NTR25J-E03K0 |
| A22R1811 | 301-0155-01 | | | RES.,FXD,CMPSN:1.5M OHM,5%,0.5W | 01121 | EB1555 |
| A22R1812 | 301-0155-01 | | | RES.,FXD,CMPSN:1.5M OHM,5%,0.5W | 01121 | EB1555 |
| A22R1813 | 301-0205-01 | | | RES.,FXD,CMPSN:2M OHM,5%,0.5W | 01121 | EB2055 |
| A22R1814 | 301-0205-01 | | | RES.,FXD,CMPSN:2M OHM,5%,0.5W | 01121 | EB2055 |
| A22R1815 | 315-0226-01 | | | RES.,FXD,CMPSN:22M OHM,5%,0.25W | 01121 | CB2265 |
| A22R1816 | 315-0103-03 | | | RES.,FXD,CMPSN:10K OHM,5%,0.25W | 01121 | CB1035 |
| A22R1817 | 315-0104-03 | | | RES.,FXD CMPSN:100K OHM,5%,0.25W | 01121 | CB1045 |
| A22R1818 | 315-0183-03 | | | RES.,FXD,CMPSN:18K OHM,5%,0.25W | 01121 | CB1835 |
| A22R1819 | 315-0183-03 | | | RES.,FXD,CMPSN:18K OHM,5%,0.25W | 01121 | CB1835 |
| A22R1820 | 315-0103-03 | | | RES.,FXD,CMPSN:10K OHM,5%,0.25W | 01121 | CB1035 |
| A22R1821 | 315-0105-03 | | | RES.,FXD,CMPSN:1M OHM,5%,0.25W | 01121 | CB1055 |
| A22R1822 | 323-0540-00 | | | RES.,FXD,FILM:4.12M OHM,1%,0.50W | 91637 | HFF129-G41203F |
| A22R1823 | 323-0540-00 | | | RES.,FXD,FILM:4.12M OHM,1%,0.50W | 91637 | HFF129-G41203F |
| A22R1824 | 323-0540-00 | | | RES.,FXD,FILM:4.12M OHM,1%,0.50W | 91637 | HFF129-G41203F |
| A22R1825 | 311-1967-00 | | | RES.,VAR,NONWIR:PNL,2M OHM,10%,0.50W | 12697 | CM41753 |
| A22R1827 | 323-0540-00 | | | RES.,FXD,FILM:4.12M OHM,1%,0.50W | 91637 | HFF129-G41203F |
| A22R1828 | 323-0525-00 | | | RES.,FXD,FILM:2.87M OHM,1%,0.5W | 91637 | CMF65116G28703F |
| A22R1829 | 323-0540-00 | | | RES.,FXD,FILM:4.12M OHM,1%,0.50W | 91637 | HFF129-G41203F |
| A22R1831 | 315-0102-03 | | | RES.,FXD,CMPSN:1K OHM,5%,0.25W | 01121 | CB1025 |
| A22R1834 | 315-0103-03 | | | RES.,FXD,CMPSN:10K OHM,5%,0.25W | 01121 | CB1035 |
| A22R1835 | 315-0153-03 | | | RES.,FXD,CMPSN:15K OHM,5%,0.25W | 01121 | CB1535 |
| A22R1837 | 315-0105-03 | | | RES.,FXD,CMPSN:1M OHM,5%,0.25W | 01121 | CB1055 |
| A22R1838 | 315-0153-03 | | | RES.,FXD,CMPSN:15K OHM,5%,0.25W | 01121 | CB1535 |
| A22R1839 | 321-0444-00 | | | RES.,FXD,FILM:412K OHM,1%,0.125W | 91637 | MFF1816G41202F |
| A22R1840 | 321-0486-00 | | | RES.,FXD,FILM:1.13M OHM,1%,0.125W | 91637 | HMF188G11303F |
| A22R1841 | 315-0184-01 | | | RES.,FXD,CMPSN:180K OHM,5%,0.25W | 01121 | CB1845 |
| A22R1842 | 315-0103-03 | | | RES.,FXD,CMPSN:10K OHM,5%,0.25W | 01121 | CB1035 |
| A22R1848 | 315-0683-03 | | | RES.,FXD,CMPSN:68K OHM,5%,0.25W | 01121 | CB6835 |
| A22R1849 | 315-0161-02 | | | RES.,FXD,CMPSN:160 OHM,5%,0.25W | 01121 | CB1615 |
| A22R1850 | 315-0161-02 | | | RES.,FXD,CMPSN:160 OHM,5%,0.25W | 01121 | CB1615 |
| A22R1852 | 315-0161-02 | | | RES.,FXD,CMPSN:160 OHM,5%,0.25W | 01121 | CB1615 |
| A22R1853 | 311-1969-00 | | | RES.,VAR,NONWIR:PNL,DUAL,5M OHM,20%,0.50W | 01121 | 72P4N048S505M |
| A22R1854 | 311-1969-00 | | | RES.,VAR,NONWIR:PNL,DUAL,5M OHM,20%,0.50W | 01121 | 72P4N048S505M |
| A22R1855 | 311-1969-00 | | | RES.,VAR,NONWIR:PNL,DUAL,5M OHM,20%,0.50W | 01121 | 72P4N048S505M |
| A22R1856 | 311-1969-00 | | | RES.,VAR,NONWIR:PNL,DUAL,5M OHM,20%,0.50W | 01121 | 72P4N048S505M |
| A22R1857 | 323-0505-00 | | | RES.,FXD,FILM:1.78M OHM,1%,0.50W | 91637 | MFF1226G17803F |
| A22R1858 | 323-0505-00 | | | RES.,FXD,FILM:1.78M OHM,1%,0.50W | 91637 | MFF1226G17803F |
| A22R1859 | 323-0505-00 | | | RES.,FXD,FILM:1.78M OHM,1%,0.50W | 91637 | MFF1226G17803F |
| A22R1860 | 315-0161-02 | | | RES.,FXD,CMPSN:160 OHM,5%,0.25W | 01121 | CB1615 |
| A22R1862 | 315-0161-02 | | | RES.,FXD,CMPSN:160 OHM,5%,0.25W | 01121 | CB1615 |
| A22R1863 | 311-1969-00 | | | RES.,VAR,NONWIR:PNL,DUAL,5M OHM,20%,0.50W | 01121 | 72P4N048S505M |
| A22R1864 | 311-1969-00 | | | RES.,VAR,NONWIR:PNL,DUAL,5M OHM,20%,0.50W | 01121 | 72P4N048S505M |
| A22R1865 | 311-1969-00 | | | RES.,VAR,NONWIR:PNL,DUAL,5M OHM,20%,0.50W | 01121 | 72P4N048S505M |



http://manoman.sqhill.com

| Component No. | Tektronix Part No. | Serial/Model No. Eff | Dscont | Name & Description | Mfr Code | Mfr Part Number |
|---|---|---|---|---|---|---|
| A22R1866 | 311-1969-00 | | | RES.,VAR,NONWIR:PNL,DUAL,5M OHM,20%,0.50W | 01121 | 72P4N048S505M |
| A22R1867 | 323-0505-00 | | | RES.,FXD,FILM:1.78M OHM,1%,0.50W | 91637 | MFF1226G17803F |
| A22R1870 | 315-0161-02 | | | RES.,FXD,CMPSN:160 OHM,5%,0.25W | 01121 | CB1615 |
| A22R1872 | 315-0161-02 | | | RES.,FXD,CMPSN:160 OHM,5%,0.25W | 01121 | CB1615 |
| A22R1873 | 311-1969-00 | | | RES.,VAR,NONWIR:PNL,DUAL,5M OHM,20%,0.50W | 01121 | 72P4N048S505M |
| A22R1874 | 311-1969-00 | | | RES.,VAR,NONWIR:PNL,DUAL,5M OHM,20%,0.50W | 01121 | 72P4N048S505M |
| A22R1875 | 311-1969-00 | | | RES.,VAR,NONWIR:PNL,DUAL,5M OHM,20%,0.50W | 01121 | 72P4N048S505M |
| A22R1876 | 311-1969-00 | | | RES.,VAR,NONWIR:PNL,DUAL,5M OHM,20%,0.50W | 01121 | 72P4N048S505M |
| A22R1877 | 315-0103-03 | | | RES.,FXD,CMPSN:10K OHM,5%,0.25W | 01121 | CB1035 |
| A22R1880 | 315-0161-02 | | | RES.,FXD,CMPSN:160 OHM,5%,0.25W | 01121 | CB1615 |
| A22R1881 | 315-0361-00 | | | RES.,FXD,CMPSN:360 OHM,5%,0.25W | 57668 | NTR25J-E 360E |
| A22R1882 | 323-0540-00 | | | RES.,FXD,FILM:4.12M OHM,1%,0.50W | 91637 | HFF129-G41203F |
| A22R1883 | 311-1968-00 | | | RES.,VAR,NONWIR:PNL,5M OHM,20%,0.50W | 01121 | 72M4N048S505M |
| A22R1884 | 323-0745-00 | | | RES.,FXD,FILM:5M OHM,1%,0.50W | 91637 | MFF1226G50003F |
| A22R1885 | 323-0745-00 | | | RES.,FXD,FILM:5M OHM,1%,0.50W | 91637 | MFF1226G50003F |
| A22R1886 | 323-0745-00 | | | RES.,FXD,FILM:5M OHM,1%,0.50W | 91637 | MFF1226G50003F |
| A22R1887 | 323-0496-00 | | | RES.,FXD,FILM:1.43M OHM,1%,0.50W | 24546 | NA65 143F |
| A22R1888 | 311-1227-00 | | | RES.,VAR,NONWIR:5K OHM,20%,0.50W | 32997 | 3386F-T04-502 |
| A22R1890 | 315-0151-00 | | | RES.,FXD,CMPSN:150 OHM,5%,0.25W | 57668 | NTR25J-E150E |
| A22R1891 | 311-1252-00 | | | RES.,VAR,NONWIR:500K OHM,20%,0.50W | 32997 | 3386F-T04-504 |
| A22R1893 | 315-0151-00 | | | RES.,FXD,CMPSN:150 OHM,5%,0.25W | 57668 | NTR25J-E150E |
| A22R1894 | 311-1235-00 | | | RES.,VAR,NONWIR:100K OHM,20%,0.50W | 32997 | 3386F-T04-104 |
| A22R1895 | 315-0151-00 | | | RES.,FXD,CMPSN:150 OHM,5%,0.25W | 57668 | NTR25J-E150E |
| A22R1896 | 321-0277-00 | | | RES.,FXD,FILM:7.5K OHM,1%,0.125W | 91637 | MFF1816G75000F |
| A22R1897 | 321-0314-00 | | | RES.,FXD,FILM:18.2K OHM,1%,0.125W | 91637 | CMF55116G18201F |
| A22RT1804 | 307-0181-00 | | | RES.,THERMAL:100K OHM,10%,4MW/DEG C | 15454 | 1DE104-K-220EC |
| A22T1708 | 120-1174-00 | | | XFMR,PWR,STU:HIGH VOLTAGE POT CORE | 80009 | 120-1174-00 |
| A22T1770 | 120-1173-00 | | | XFMR,PWR,SDN&SU:HIGH VOLTAGE | 80009 | 120-1173-00 |
| A22TP1756 | — — | | | (SEE MAINT SECTION FOR SQ PIN REPL) | | |
| A22TP1775 | — — | | | (SEE MAINT SECTION FOR SQ PIN REPL) | | |
| A22TP1813 | — — | | | (SEE MAINT SECTION FOR SQ PIN REPL) | | |
| A22TP1844 | — — | | | (SEE MAINT SECTION FOR SQ PIN REPL) | | |
| A22TP1846 | — — | | | (SEE MAINT SECTION FOR SQ PIN REPL) | | |
| A22TP1850 | — — | | | (SEE MAINT SECTION FOR SQ PIN REPL) | | |
| A22TP1852 | — — | | | (SEE MAINT SECTION FOR SQ PIN REPL) | | |
| A22TP1860 | — — | | | (SEE MAINT SECTION FOR SQ PIN REPL) | | |
| A22TP1862 | — — | | | (SEE MAINT SECTION FOR SQ PIN REPL) | | |
| A22TP1870 | — — | | | (SEE MAINT SECTION FOR SQ PIN REPL) | | |
| A22TP1872 | — — | | | (SEE MAINT SECTION FOR SQ PIN REPL) | | |
| A22U1700 | 152-0687-00 | | | SEMICOND DEVICE:HV MULTR,SI,2.4KV PP INPUT | 52306 | CMX334C |
| A22U1714 | 156-0158-01 | | | MICROCIRCUIT,LI:DUAL OPERATIONAL AMPLIFIER | 04713 | MC1458P1DS |
| A22U1736 | 156-0512-01 | | | MICROCIRCUIT,LI:OPNL AMPL,CHK | 04713 | LM308NDS |
| A22U1802 | 156-0067-01 | | | MICROCIRCUIT,LI:OPERATIONAL AMPLIFIER,CHK | 04713 | MC1741CP1DS |
| A22VR1784 | 152-0470-00 | | | SEMICOND DEVICE:ZENER,0.4W,5%,200V | 04713 | 1N992B |



http://manoman.sqhill.com

| Component No. | Tektronix Part No. | Serial/Model No. Eff | Dscont | Name & Description | Mfr Code | Mfr Part Number |
|---|---|---|---|---|---|---|
| A23 | 620-0283-01 | | | PWR SUPPLY ASSY: | 80009 | 620-0283-01 |
| A23 | —— —— | | | (INCLUDES A23,A24,A25 ASSEMBLIES) | | |
| A23 | 670-6259-01 | B010100 | B029999 | CKT BOARD ASSY:INVERTER | 80009 | 670-6259-01 |
| A23 | —— —— | | | (PART OF 620-0283-XX) | | |
| A23 | 670-6259-02 | B030000 | | CKT BOARD ASSY:INVERTER | 80009 | 670-6259-02 |
| A23 | —— —— | | | (PART OF 620-0283-XX) | | |
| A23C16 | 290-0628-00 | | | CAP.,FXD,ELCTLT:950UF,+50-10%,200V | 56289 | 36D7560 |
| A23C17 | 290-0628-00 | | | CAP.,FXD,ELCTLT:950UF,+50-10%,200V | 56289 | 36D7560 |
| A23C37 | 285-0938-00 | | | CAP.,FXD,PLSTC:0.03UF,5%,600V | 56289 | P192211 |
| A23C154 | 290-0898-00 | | | CAP.,FXD,ELCTLT:2200UF,+75%-10%,10VDC | 56289 | 432D222010AA2 |
| A23F10 | 159-0017-00 | | | FUSE,CARTRIDGE:3AG,4A,250V,FAST BLOW | 71400 | MTH-CW-4 |
| A23FL10 | 119-0420-00 | | | FILTER,RFI:6A,250VAC,400HZ | 02777 | F-11935-6 |
| A23L37 | 108-0761-00 | | | COIL,RF:1MH | 80009 | 108-0761-00 |
| A23Q28 | 151-0656-00 | | | TRANSISTOR:SILICON,NPN | 04713 | SJE1972 |
| A23Q34 | 151-0632-00 | | | TRANSISTOR:SILICON,NPN | 04713 | SJE1946 |
| A23Q40 | 151-0632-00 | | | TRANSISTOR:SILICON,NPN | 04713 | SJE1946 |
| A23Q58 | 151-0657-00 | | | TRANSISTOR:SILICON,PNP | 04713 | SJE1973 |
| A23Q74 | 151-0656-00 | | | TRANSISTOR:SILICON,NPN | 04713 | SJE1972 |
| A23Q94 | 151-0657-00 | | | TRANSISTOR:SILICON,PNP | 04713 | SJE1973 |
| A23Q122 | 151-0349-00 | | | TRANSISTOR:SILICON,NPN,SEL FROM MJE280 | 04713 | SJE924 |
| A23Q126 | 151-0477-01 | | | TRANSISTOR:SCREENED | 80009 | 151-0477-01 |
| A23R6 | 303-0105-00 | | | RES.,FXD,CMPSN:1M OHM,5%,1W | 01121 | GB1055 |
| A23S12 | 260-1300-00 | | | SWITCH,SLIDE:DPDT,3A,125VAC | 82389 | 46206LFE |
| A23S99 | 260-0450-00 | | | SWITCH,SLIDE:3 POS,DOUBLE POLE | 82389 | 11D-1007 |
| A23T110 | 120-1183-00 | | | XFMR,PWR,STPDN:HIGH FREQUENCY | 80009 | 120-1183-00 |



http://manoman.sqhill.com

| Component No. | Tektronix Part No. | Serial/Model No. Eff | Dscont | Name & Description | Mfr Code | Mfr Part Number |
|---|---|---|---|---|---|---|
| A23A1 | 670-6259-01 | B010100 | B029999 | CKT BOARD ASSY:INVERTER | 80009 | 670-6259-01 |
| A23A1 | — — | | | (PART OF 620-0283-XX) | | |
| A23A1 | 670-6259-02 | B030000 | | CKT BOARD ASSY:INVERTER | 80009 | 670-6259-02 |
| A23A1 | — — | | | (PART OF 620-0283-XX) | | |
| A23A1C5 | 283-0022-00 | B010100 | B029999 | CAP.,FXD,CER DI:0.02UF,1400VDCAC | 59660 | 3888531Z5U0203Z |
| A23A1C5 | 119-1168-00 | B030000 | | CAPACITOR-RES:0.1UF,20% & 22 OHM,10%,250V | 14752 | RG1782-1 |
| A23A1C6 | 283-0022-00 | B010100 | B029999 | CAP.,FXD,CER DI:0.02UF,1400VDCAC | 59660 | 3888531Z5U0203Z |
| A23A1C19 | 283-0057-00 | | | CAP.,FXD,CER DI:0.1UF,+80-20%,200V | 56289 | 2C20Z5U104Z200B |
| A23A1C27 | 283-0280-00 | B010100 | B029999 | CAP.,FXD,CER DI:2200PF,10%,2000V | 59660 | 0818590Y5500222K |
| A23A1C27 | 283-0351-00 | B030000 | | CAP.,FXD,CER DI:5000PF,20%,3000V | 51406 | DHR17Z5U502M3KV |
| A23A1C28 | 283-0280-00 | | | CAP.,FXD,CER DI:2200PF,10%,2000V | 59660 | 0818590Y5500222K |
| A23A1C28 | 283-0351-00 | B030000 | | CAP.,FXD,CER DI:5000PF,20%,3000V | 51406 | DHR17Z5U502M3KV |
| A23A1C29 | 285-0939-00 | | | CAP.,FXD,PLSTC:3UF,5%,400V | 84411 | TEK111-30594 |
| A23A1C31 | 290-0891-00 | | | CAP.,FXD,ELCTLT:1UF,+75-10%,50V | 55680 | ULA1H010TEA |
| A23A1C35 | 283-0060-00 | | | CAP.,FXD,CER DI:100PF,5%,200V | 59660 | 855-535U2J101J |
| A23A1C36 | 283-0280-00 | | | CAP.,FXD,CER DI:2200PF,10%,2000V | 59660 | 0818590Y5500222K |
| A23A1C38 | 283-0279-00 | | | CAP.,FXD,CER DI:0.001UF,20%,3000V | 59660 | 878-521-S-Y5S-10 |
| A23A1C39 | 290-0891-00 | | | CAP.,FXD,ELCTLT:1UF,+75-10%,50V | 55680 | ULA1H010TEA |
| A23A1C42 | 283-0079-00 | | | CAP.,FXD,CER DI:0.01UF,20%,250V | 59660 | 8151B202Y5S0103M |
| A23A1C43 | 290-0767-00 | | | CAP.,FXD,ELCTLT:4.7UF,+75-10%,160V | 56289 | 5020228 |
| A23A1CR15 | 152-0396-01 | B010100 | B029999 | SEMICOND DEVICE:SILICON,400V,3A | 12969 | 652-821 |
| A23A1CR15 | 152-0750-00 | B030000 | | SEMICOND DEVICE:RECT BRIDGE,600V,3A | 05828 | RKBPC606-12 |
| A23A1CR32 | 152-0107-00 | | | SEMICOND DEVICE:SILICON,400V,400MA | 12969 | G727 |
| A23A1CR33 | 152-0400-00 | | | SEMICOND DEVICE:SILICON,400V,1A | 80009 | 1N4936 |
| A23A1CR34 | 152-0400-00 | | | SEMICOND DEVICE:SILICON,400V,1A | 80009 | 1N4936 |
| A23A1CR36 | 152-0061-00 | | | SEMICOND DEVICE:SILICON,175V,100MA | 07263 | FDH2161 |
| A23A1CR37 | 152-0061-00 | | | SEMICOND DEVICE:SILICON,175V,100MA | 07263 | FDH2161 |
| A23A1CR38 | 152-0107-00 | | | SEMICOND DEVICE:SILICON,400V,400MA | 12969 | G727 |
| A23A1CR39 | 152-0400-00 | | | SEMICOND DEVICE:SILICON,400V,1A | 80009 | 1N4936 |
| A23A1CR40 | 152-0107-00 | | | SEMICOND DEVICE:SILICON,400V,400MA | 12969 | G727 |
| A23A1CR41 | 152-0400-00 | | | SEMICOND DEVICE:SILICON,400V,1A | 80009 | 1N4936 |
| A23A1CR45 | 152-0061-00 | | | SEMICOND DEVICE:SILICON,175V,100MA | 07263 | FDH2161 |
| A23A1CR46 | 152-0581-00 | | | SEMICOND DEVICE:SILICON,20V,1A | 04713 | 1N5817 |
| A23A1CR49 | 152-0107-00 | | | SEMICOND DEVICE:SILICON,400V,400MA | 12969 | G727 |
| A23A1DS19 | 150-0035-00 | | | LAMP,GLOW:90V,0.3MA,AID-T,WIRE LD | 000LI | JH005/3011JA |
| A23A1E8 | 119-0181-00 | | | ARSR,ELEC SURGE:230V,GAS FILLED | 74276 | CG230L |
| A23A1E13 | 119-0181-00 | | | ARSR,ELEC SURGE:230V,GAS FILLED | 74276 | CG230L |
| A23A1L24 | 108-0681-00 | | | COIL,RF:140UH | 80009 | 108-0681-00 |
| A23A1Q30 | 151-0508-00 | | | TRANSISTOR:UJT,SI,2N6027,TO-98 | 03508 | X13T520 |
| A23A1Q34 | 151-0632-00 | | | TRANSISTOR:SILICON,NPN | 04713 | SJE1946 |
| A23A1Q40 | 151-0632-00 | | | TRANSISTOR:SILICON,NPN | 04713 | SJE1946 |
| A23A1Q43 | 151-0347-00 | | | TRANSISTOR:SILICON,NPN | 56289 | T7916 |
| A23A1Q45 | 151-0350-00 | | | TRANSISTOR:SILICON,PNP | 04713 | SPS6700 |
| A23A1Q46 | 151-0260-00 | | | TRANSISTOR:SILICON,NPN | 04713 | ST1083 |
| A23A1R5 | 304-0270-00 | B010100 | B029999 | RES.,FXD,CMPSN:27 OHM,10%,1W | 01121 | GB2701 |
| A23A1R8 | 308-0503-00 | B010100 | B029999 | RES.,FXD,WW:6.8 OHM,5%,2.50W | 91637 | CW2B-D6R800J |
| A23A1R9 | 304-0473-00 | | | RES.,FXD,CMPSN:47K OHM,10%,1W | 01121 | GB4731 |
| A23A1R10 | 303-0184-00 | | | RES.,FXD,CMPSN:180K OHM,5%,1W | 01121 | GB1845 |
| A23A1R12 | 308-0503-00 | B010100 | B029999 | RES.,FXD,WW:6.8 OHM,5%,2.50W | 91637 | CW2B-D6R800J |
| A23A1R13 | 304-0473-00 | | | RES.,FXD,CMPSN:47K OHM,10%,1W | 01121 | GB4731 |
| A23A1R19 | 302-0565-00 | | | RES.,FXD,CMPSN:5.6M OHM,10%,0.05W | 01121 | EB5651 |
| A23A1R21 | 304-0154-00 | | | RES.,FXD,CMPSN:150K OHM,10%,1W | 01121 | GB1541 |
| A23A1R25 | 315-0471-00 | | | RES.,FXD,CMPSN:470 OHM,5%,0.25W | 57668 | NTR25J-E470E |



http://manoman.sqhill.com

| Component No. | Tektronix Part No. | Serial/Model No. Eff | Dscont | Name & Description | Mfr Code | Mfr Part Number |
|---|---|---|---|---|---|---|
| A23A1R31 | 303-0100-00 | | | RES.,FXD,CMPSN:10 OHM,5%,1W | 01121 | GB1005 |
| A23A1R32 | 315-0220-00 | | | RES.,FXD,CMPSN:22 OHM,5%,0.25W | 57668 | NTR25J-E 22E |
| A23A1R36 | 315-0103-00 | | | RES.,FXD,CMPSN:10K OHM,5%,0.25W | 57668 | NTR25J-E10K0 |
| A23A1R37 | 301-0200-00 | | | RES.,FXD,CMPSN:20 OHM,5%,0.5W | 01121 | EB2005 |
| A23A1R38 | 315-0332-00 | | | RES.,FXD,CMPSN:3.3K OHM,5%,0.25W | 57668 | NTR25J-E03K3 |
| A23A1R39 | 301-0200-00 | | | RES.,FXD,CMPSN:20 OHM,5%,0.5W | 01121 | EB2005 |
| A23A1R40 | 315-0220-00 | | | RES.,FXD,CMPSN:22 OHM,5%,0.25W | 57668 | NTR25J-E 22E |
| A23A1R41 | 315-0753-00 | | | RES.,FXD,CMPSN:75K OHM,5%,0.25W | 57668 | NTR25J-E75K0 |
| A23A1R42 | 315-0303-00 | | | RES.,FXD,CMPSN:30K OHM,5%,0.25W | 57668 | NTR25J-E 30K |
| A23A1R43 | 315-0274-00 | | | RES.,FXD,CMPSN:270K OHM,5%,0.25W | 57668 | NTR25J-E270K |
| A23A1R44 | 315-0270-00 | | | RES.,FXD,CMPSN:27 OHM,5%,0.25W | 57668 | NTR25J-E 27E |
| A23A1R45 | 315-0182-00 | | | RES.,FXD,CMPSN:1.8K OHM,5%,0.25W | 57668 | NTR25J-E1K8 |
| A23A1R46 | 315-0123-00 | | | RES.,FXD,CMPSN:12K OHM,5%,0.25W | 57668 | NTR25J-E12K0 |
| A23A1R47 | 301-0184-00 | | | RES.,FXD,CMPSN:180K OHM,5%,0.5W | 01121 | EB1845 |
| A23A1RT9 | 307-0353-00 | | | RES.,FXD,FILM:5 OHM,10%,DISC | 15454 | 5DA5RO-K-270SS |
| A23A1RT13 | 307-0353-00 | | | RES.,FXD,FILM:5 OHM,10%,DISC | 15454 | 5DA5RO-K-270SS |
| A23A1T8 | 120-0636-00 | | | XFMR,PWR,STPDN:LINE TRIGGER | 80009 | 120-0636-00 |
| A23A1T25 | 120-0743-00 | | | XFMR,TOROID:13 TURNS,BIFILAR | 80009 | 120-0743-00 |
| A23A1T30 | 120-0744-00 | | | XFMR,TOROID:5 WINDINGS | 80009 | 120-0744-00 |
| A23A1T35 | 120-0747-00 | | | XFMR,TOROID:55 TURNS,SINGLE | 80009 | 120-0747-00 |
| A23A1TP31 | 214-0579-00 | | | TERM,TEST POINT:BRS CD PL | 80009 | 214-0579-00 |
| A23A1TP34 | 214-0579-00 | | | TERM,TEST POINT:BRS CD PL | 80009 | 214-0579-00 |
| A23A1TP38 | 214-0579-00 | | | TERM,TEST POINT:BRS CD PL | 80009 | 214-0579-00 |
| A23A1TP46 | 214-0579-00 | | | TERM,TEST POINT:BRS CD PL | 80009 | 214-0579-00 |
| A23A1VR38 | 152-0241-00 | | | SEMICOND DEVICE:ZENER,0.4W,33V,5% | 04713 | SZG35009K5 |
| A23A1VR45 | 152-0428-00 | | | SEMICOND DEVICE:ZENER,0.4W,120V,5% | 80009 | 152-0428-00 |
| A23A1W5 | 131-0566-00 | B030000 | | BUS CONDUCTOR:DUMMY RES,2.375,22 AWG | 57668 | JWW-0200E0 |



http://manoman.sqhill.com

| Component No. | Tektronix Part No. | Serial/Model No. Eff | Dscont | Name & Description | Mfr Code | Mfr Part Number |
|---|---|---|---|---|---|---|
| A24 | 670-5959-03 | | | CKT BOARD ASSY:CONTROL RECTIFIER | 80009 | 670-5959-03 |
| A24 | —— —— | | | (PART OF 620-0283-XX) | | |
| A24C52 | 283-0003-00 | | | CAP.,FXD,CER DI:0.01UF,+80-20%,150V | 59821 | D103Z40Z5UJDCEX |
| A24C54 | 290-0573-00 | | | CAP.,FXD,ELCTLT:2.7UF,20%,50V | 56289 | 196D275X0050JA1 |
| A24C55 | 283-0028-00 | | | CAP.,FXD,CER DI:0.0022UF,20%,50V | 59660 | 0805585Y5SO222M |
| A24C64 | 290-0263-00 | | | CAP.,FXD,ELCTLT:2.7UF,15V | 56289 | 173D275X9015V |
| A24C66 | 283-0003-00 | | | CAP.,FXD,CER DI:0.01UF,+80-20%,150V | 59821 | D103Z40Z5UJDCEX |
| A24C67 | 290-0523-00 | | | CAP.,FXD,ELCTLT:2.2UF,20%,20V | 56289 | 196D225X0020HA1 |
| A24C70 | 290-0534-00 | | | CAP.,FXD,ELCTLT:1UF,20%,35V | 56289 | 196D105X0035HA1 |
| A24C71 | 290-0534-00 | | | CAP.,FXD,ELCTLT:1UF,20%,35V | 56289 | 196D105X0035HA1 |
| A24C74 | 283-0594-00 | | | CAP.,FXD,MICA D:0.001UF,1%,100V | 00853 | D151F102F0 |
| A24C77 | 283-0060-00 | | | CAP.,FXD,CER DI:100PF,5%,200V | 59660 | 855-535U2J101J |
| A24C78 | 283-0060-00 | | | CAP.,FXD,CER DI:100PF,5%,200V | 59660 | 855-535U2J101J |
| A24C80 | 283-0080-00 | | | CAP.,FXD,CER DI:0.022UF,+80-20%,25V | 59821 | 2DDU60E223Z |
| A24C86 | 290-0580-00 | | | CAP.,FXD,ELCTLT:0.27UF,20%,50V | 56289 | 196D274X0050HA1 |
| A24C90 | 290-0778-00 | | | CAP.,FXD,ELCTLT:1UF,+50-10%,50V | 55680 | UEB1H010MAA1TD |
| A24C92 | 285-1123-00 | | | CAP.,FXD,PLSTC:1UF,20%,200V | 50558 | ME2-2190 |
| A24C94 | 285-0695-00 | | | CAP.,FXD,PLSTC:0.01UF,10%,200V | 56289 | 192P10392 |
| A24C121 | 285-0892-00 | | | CAP.,FXD,PLSTC:0.22UF,10%,200V | 56289 | LP66A1C224K002 |
| A24C124 | 290-0758-00 | | | CAP.,FXD,ELCTLT:2.2UF,+50-10%,160V | 56289 | 502D227 |
| A24C125 | 290-0758-00 | | | CAP.,FXD,ELCTLT:2.2UF,+50-10%,160V | 56289 | 502D227 |
| A24C132 | 290-0768-00 | | | CAP.,FXD,ELCTLT:10UF,+50-10%,100V | 54473 | ECE-A100V10L |
| A24C133 | 290-0768-00 | | | CAP.,FXD,ELCTLT:10UF,+50-10%,100V | 54473 | ECE-A100V10L |
| A24C134 | 290-0768-00 | | | CAP.,FXD,ELCTLT:10UF,+50-10%,100V | 54473 | ECE-A100V10L |
| A24C135 | 290-0768-00 | | | CAP.,FXD,ELCTLT:10UF,+50-10%,100V | 54473 | ECE-A100V10L |
| A24C142 | 290-0772-00 | | | CAP.,FXD,ELCTLT:330UF,+50-10%,25V | 0000L | ECE-B25Z330 |
| A24C143 | 290-0770-00 | | | CAP.,FXD,ELCTLT:100UF,+50-10%,25V | 54473 | ECE-A25V100L |
| A24C144 | 290-0772-00 | | | CAP.,FXD,ELCTLT:330UF,+50-10%,25V | 0000L | ECE-B25Z330 |
| A24C145 | 290-0770-00 | | | CAP.,FXD,ELCTLT:100UF,+50-10%,25V | 54473 | ECE-A25V100L |
| A24C152 | 290-0771-00 | | | CAP.,FXD,ELCTLT:220UF,+50-10%,10VDC | 56289 | 502D231 |
| A24C153 | 290-0771-00 | | | CAP.,FXD,ELCTLT:220UF,+50-10%,10VDC | 56289 | 502D231 |
| A24C155 | 290-0773-00 | | | CAP.,FXD,ELCTLT:1000UF,+50-10%,10V | 56289 | 500D154 |
| A24C156 | 290-0771-00 | | | CAP.,FXD,ELCTLT:220UF,+50-10%,10VDC | 56289 | 502D231 |
| A24C172 | 290-0746-00 | | | CAP.,FXD,ELCTLT:47UF,+50-10%,16V | 55680 | ULA1C470TEA |
| A24C179 | 283-0177-00 | | | CAP.,FXD,CER DI:1UF,+80-20%,25V | 04222 | SR302E105ZAA |
| A24C183 | 283-0111-00 | | | CAP.,FXD,CER DI:0.1UF,20%,50V | 96733 | ADVISE |
| A24CR52 | 152-0333-00 | | | SEMICOND DVC DI:SW,SI,55V,200MA,D0-35 | 03508 | DJ2011 |
| A24CR59 | 152-0333-00 | | | SEMICOND DVC DI:SW,SI,55V,200MA,D0-35 | 03508 | DJ2011 |
| A24CR65 | 152-0141-02 | | | SEMICOND DVC,DI:SW,SI,30V,150MA,30V,DO-35 | 12969 | NDP0263 (1N4152) |
| A24CR66 | 152-0141-02 | | | SEMICOND DVC,DI:SW,SI,30V,150MA,30V,DO-35 | 12969 | NDP0263 (1N4152) |
| A24CR73 | 152-0333-00 | | | SEMICOND DVC DI:SW,SI,55V,200MA,D0-35 | 03508 | DJ2011 |
| A24CR74 | 152-0333-00 | | | SEMICOND DVC DI:SW,SI,55V,200MA,D0-35 | 03508 | DJ2011 |
| A24CR75 | 152-0333-00 | | | SEMICOND DVC DI:SW,SI,55V,200MA,D0-35 | 03508 | DJ2011 |
| A24CR76 | 152-0333-00 | | | SEMICOND DVC DI:SW,SI,55V,200MA,D0-35 | 03508 | DJ2011 |
| A24CR81 | 152-0333-00 | | | SEMICOND DVC DI:SW,SI,55V,200MA,D0-35 | 03508 | DJ2011 |
| A24CR82 | 152-0333-00 | | | SEMICOND DVC DI:SW,SI,55V,200MA,D0-35 | 03508 | DJ2011 |
| A24CR83 | 152-0333-00 | | | SEMICOND DVC DI:SW,SI,55V,200MA,D0-35 | 03508 | DJ2011 |
| A24CR84 | 152-0333-00 | | | SEMICOND DVC DI:SW,SI,55V,200MA,D0-35 | 03508 | DJ2011 |
| A24CR90 | 152-0141-02 | | | SEMICOND DVC,DI:SW,SI,30V,150MA,30V,DO-35 | 12969 | NDP0263 (1N4152) |
| A24CR120 | 152-0242-00 | | | SEMICOND DVC:SIG,SI,225V,0.2A,D0-7 | 07263 | FDH5004 |
| A24CR121 | 152-0242-00 | | | SEMICOND DVC:SIG,SI,225V,0.2A,D0-7 | 07263 | FDH5004 |
| A24CR122 | 152-0242-00 | | | SEMICOND DVC:SIG,SI,225V,0.2A,D0-7 | 07263 | FDH5004 |
| A24CR123 | 152-0242-00 | | | SEMICOND DVC:SIG,SI,225V,0.2A,D0-7 | 07263 | FDH5004 |



http://manoman.sqhill.com

| Component No. | Tektronix Part No. | Serial/Model No. Eff | Dscont | Name & Description | Mfr Code | Mfr Part Number |
|---|---|---|---|---|---|---|
| A24CR124 | 152-0242-00 | | | SEMICOND DVC:SIG,SI,225V,0.2A,D0-7 | 07263 | FDH5004 |
| A24CR125 | 152-0242-00 | | | SEMICOND DVC:SIG,SI,225V,0.2A,D0-7 | 07263 | FDH5004 |
| A24CR127 | 152-0242-00 | | | SEMICOND DVC:SIG,SI,225V,0.2A,D0-7 | 07263 | FDH5004 |
| A24CR130 | 152-0586-00 | | | SEMICOND DEVICE:SILICON,600V,500MA | 14936 | RGP10J-011 |
| A24CR131 | 152-0586-00 | | | SEMICOND DEVICE:SILICON,600V,500MA | 14936 | RGP10J-011 |
| A24CR132 | 152-0586-00 | | | SEMICOND DEVICE:SILICON,600V,500MA | 14936 | RGP10J-011 |
| A24CR133 | 152-0586-00 | | | SEMICOND DEVICE:SILICON,600V,500MA | 14936 | RGP10J-011 |
| A24CR140 | 152-0397-00 | | | SEMICOND DEVICE:SILICON,50V,12A | 80009 | 152-0397-00 |
| A24CR141 | 152-0397-00 | | | SEMICOND DEVICE:SILICON,50V,12A | 80009 | 152-0397-00 |
| A24CR142 | 152-0397-00 | | | SEMICOND DEVICE:SILICON,50V,12A | 80009 | 152-0397-00 |
| A24CR143 | 152-0397-00 | | | SEMICOND DEVICE:SILICON,50V,12A | 80009 | 152-0397-00 |
| A24CR151 | 152-0692-00 | | | SEMICOND DEVICE:DUAL RECT,SI,30A,20V | 83003 | SKS017 |
| A24CR161 | 152-0008-00 | | | SEMICOND DEVICE:GERMANIUM,75V,60MA | 14433 | G1409 |
| A24CR171 | 152-0141-02 | | | SEMICOND DVC,DI:SW,SI,30V,150MA,30V,DO-35 | 12969 | NDP0263 (1N4152) |
| A24CR183 | 152-0141-02 | | | SEMICOND DVC,DI:SW,SI,30V,150MA,30V,DO-35 | 12969 | NDP0263 (1N4152) |
| A24L132 | 108-0473-00 | | | COIL,RF:150UH | 80009 | 108-0473-00 |
| A24L134 | 108-0473-00 | | | COIL,RF:150UH | 80009 | 108-0473-00 |
| A24L142 | 108-0680-00 | | | COIL,RF:27UH | 80009 | 108-0680-00 |
| A24L144 | 108-0680-00 | | | COIL,RF:27UH | 80009 | 108-0680-00 |
| A24L152 | 108-0473-00 | | | COIL,RF:150UH | 80009 | 108-0473-00 |
| A24L154 | 108-0556-00 | | | COIL,RF:12UH | 80009 | 108-0556-00 |
| A24L156 | 108-0337-00 | | | COIL,RF:25UH | 80009 | 108-0337-00 |
| A24P40 | 131-0589-00 | | | TERMINAL,PIN:0.46 L X 0.025 SQ | 22526 | 48283-029 |
| A24P40 | — — | | | (QUANTITY OF 4) | | |
| A24P48 | 131-0608-00 | | | TERMINAL,PIN:0.365 L X 0.025 PH BRZ GOLD | 22526 | 48283-036 |
| A24P48 | — — | | | (QUANTITY OF 5) | | |
| A24P50 | 131-0608-00 | | | TERMINAL,PIN:0.365 L X 0.025 PH BRZ GOLD | 22526 | 48283-036 |
| A24P50 | — — | | | (QUANTITY OF 7) | | |
| A24P52 | 131-0608-00 | | | TERMINAL,PIN:0.365 L X 0.025 PH BRZ GOLD | 22526 | 48283-036 |
| A24P52 | — — | | | (QUANTITY OF 6) | | |
| A24P54 | 131-0608-00 | | | TERMINAL,PIN:0.365 L X 0.025 PH BRZ GOLD | 22526 | 48283-036 |
| A24P54 | — — | | | (QUANTITY OF 4) | | |
| A24Q52 | 151-0302-00 | | | TRANSISTOR:SILICON,NPN | 07263 | S038487 |
| A24Q54 | 151-0273-00 | | | TRANSISTOR:SILICON,NPN | 80009 | 151-0273-00 |
| A24Q162 | 151-0190-05 | | | TRANSISTOR:SILICON,NPN | 80009 | 151-0190-05 |
| A24Q171 | 151-0190-05 | | | TRANSISTOR:SILICON,NPN | 80009 | 151-0190-05 |
| A24Q173 | 151-0188-03 | | | TRANSISTOR:SILICON,PNP,SEL | 80009 | 151-0188-03 |
| A24Q177 | 151-0188-03 | | | TRANSISTOR:SILICON,PNP,SEL | 80009 | 151-0188-03 |
| A24R52 | 315-0512-00 | | | RES.,FXD,CMPSN:5.1K OHM,5%,0.25W | 57668 | NTR25J-E05K1 |
| A24R54 | 315-0753-00 | | | RES.,FXD,CMPSN:75K OHM,5%,0.25W | 57668 | NTR25J-E75K0 |
| A24R55 | 315-0201-00 | | | RES.,FXD,CMPSN:200 OHM,5%,0.25W | 57668 | NTR25J-E200E |
| A24R59 | 315-0562-00 | | | RES.,FXD,CMPSN:5.6K OHM,5%,0.25W | 57668 | NTR25J-E05K6 |
| A24R60 | 315-0224-00 | | | RES.,FXD,CMPSN:220K OHM,5%,0.25W | 57668 | NTR25J-E220K |
| A24R61 | 315-0123-00 | | | RES.,FXD,CMPSN:12K OHM,5%,0.25W | 57668 | NTR25J-E12K0 |
| A24R62 | 315-0301-00 | | | RES.,FXD,CMPSN:300 OHM,5%,0.25W | 57668 | NTR25J-E300E |
| A24R63 | 315-0470-00 | | | RES.,FXD,CMPSN:47 OHM,5%,0.25W | 57668 | NTR25J-E47E0 |
| A24R64 | 315-0102-00 | | | RES.,FXD,CMPSN:1K OHM,5%,0.25W | 57668 | NTR25JE01K0 |
| A24R66 | 315-0202-00 | | | RES.,FXD,CMPSN:2K OHM,5%,0.25W | 57668 | NTR25J-E02K0 |
| A24R67 | 315-0154-00 | | | RES.,FXD,CMPSN:150K OHM,5%,0.25W | 57668 | NTR25J-E150K |
| A24R70 | 315-0560-00 | | | RES.,FXD,CMPSN:56 OHM,5%,0.25W | 57668 | NTR25J-E56E0 |
| A24R71 | 315-0560-00 | | | RES.,FXD,CMPSN:56 OHM,5%,0.25W | 57668 | NTR25J-E56E0 |
| A24R74 | 321-0346-00 | | | RES.,FXD,FILM:39.2K OHM,1%,0.125W | 91637 | CMF55116G39201F |
| A24R80 | 315-0471-00 | | | RES.,FXD,CMPSN:470 OHM,5%,0.25W | 57668 | NTR25J-E470E |
| A24R81 | 321-0334-00 | | | RES.,FXD,FILM:29.4K OHM,1%,0.125W | 91637 | MFF1816G29401F |



http://manoman.sqhill.com

| Component No. | Tektronix Part No. | Serial/Model No. Eff | Dscont | Name & Description | Mfr Code | Mfr Part Number |
|---|---|---|---|---|---|---|
| A24R82 | 321-0340-00 | | | RES.,FXD,FILM:34K OHM,1%,0.125W | 91637 | CMF55116G34001F |
| A24R83 | 321-0193-00 | | | RES.,FXD,FILM:1K OHM,1%,0.125W | 19701 | 5043ED1K00F |
| A24R84 | 321-0005-00 | | | RES.,FXD,FILM:11 OHM,1%,0.125W | 75042 | CEAT0-11R0F |
| A24R86 | 321-0284-00 | | | RES.,FXD,FILM:8.87K OHM,1%,0.125W | 91637 | MFF1816G88700F |
| A24R87 | 321-0283-00 | | | RES.,FXD,FILM:8.66K OHM,1%,0.125W | 91637 | CMF55116G86600F |
| A24R88 | 315-0122-00 | | | RES.,FXD,CMPSN:1.2K OHM,5%,0.25W | 57668 | NTR25J-E01K2 |
| A24R90 | 315-0272-00 | | | RES.,FXD,CMPSN:2.7K OHM,5%,0.25W | 57668 | NTR25J-E02K7 |
| A24R92 | 315-0105-00 | | | RES.,FXD,CMPSN:1M OHM,5%,0.25W | 57668 | NTR255-E 1M |
| A24R93 | 311-1239-00 | | | RES.,VAR,NONWIR:2.5K OHM,10%,0.50W | 73138 | 72-26-0 |
| A24R94 | 315-0203-00 | | | RES.,FXD,CMPSN:20K OHM,5%,0.25W | 57668 | NTR25J-E20K0 |
| A24R95 | 321-0419-00 | | | RES.,FXD,FILM:226K OHM,1%,0.125W | 91637 | MFF1816G22602F |
| A24R120 | 315-0150-00 | | | RES.,FXD,CMPSN:15 OHM,5%,0.25W | 57668 | NTR25J-E 15E |
| A24R121 | 315-0101-00 | | | RES.,FXD,CMPSN:100 OHM,5%,0.25W | 57668 | NTR25J-E 100E |
| A24R127 | 301-0391-00 | | | RES.,FXD,CMPSN:390 OHM,5%,0.5W | 01121 | EB3915 |
| A24R161 | 315-0473-00 | | | RES.,FXD,CMPSN:47K OHM,5%,0.25W | 57668 | NTR25J-E47K0 |
| A24R162 | 315-0472-00 | | | RES.,FXD,CMPSN:4.7K OHM,5%,0.25W | 57668 | NTR25J-E04K7 |
| A24R170 | 315-0100-00 | | | RES.,FXD,CMPSN:10 OHM,5%,0.25W | 57668 | NTR25J-E 10E0 |
| A24R171 | 315-0274-00 | | | RES.,FXD,CMPSN:270K OHM,5%,0.25W | 57668 | NTR25J-E270K |
| A24R172 | 315-0474-00 | | | RES.,FXD,CMPSN:470K OHM,5%,0.25W | 57668 | NTR25J-E470K |
| A24R173 | 315-0272-00 | | | RES.,FXD,CMPSN:2.7K OHM,5%,0.25W | 57668 | NTR25J-E02K7 |
| A24R174 | 315-0182-00 | | | RES.,FXD,CMPSN:1.8K OHM,5%,0.25W | 57668 | NTR25J-E1K8 |
| A24R176 | 315-0203-00 | | | RES.,FXD,CMPSN:20K OHM,5%,0.25W | 57668 | NTR25J-E20K0 |
| A24R177 | 315-0203-00 | | | RES.,FXD,CMPSN:20K OHM,5%,0.25W | 57668 | NTR25J-E20K0 |
| A24R179 | 315-0472-00 | | | RES.,FXD,CMPSN:4.7K OHM,5%,0.25W | 57668 | NTR25J-E04K7 |
| A24R181 | 315-0334-00 | | | RES.,FXD,CMPSN:330K OHM,5%,0.25W | 01121 | CB3345 |
| A24R182 | 315-0754-00 | | | RES.,FXD,CMPSN:750K OHM,5%,0.25W | 57668 | NTR25J-E 750K |
| A24TP00 | 214-0579-00 | | | TERM,TEST POINT:BRS CD PL | 80009 | 214-0579-00 |
| A24TP126 | 214-0579-00 | | | TERM,TEST POINT:BRS CD PL | 80009 | 214-0579-00 |
| A24U75 | 155-0067-02 | | | MICROCIRCUIT,DI:ML,POWER SPLY RGLTR 16 DIP | 80009 | 155-0067-02 |
| A24U179 | 156-0481-02 | | | MICROCIRCUIT,DI:TRIPLE 3 INP & GATE | 27014 | DM74LS11NA+ |
| A24VR52 | 152-0590-00 | | | SEMICOND DEVICE:ZENER,18V,5% AT 7MA | 04713 | SZG35014K2 |
| A24VR72 | 152-0243-00 | | | SEMICOND DEVICE:ZENER,0.4W,15V,5% | 14552 | TD3810983 |
| A24VR88 | 152-0212-00 | | | SEMICOND DEVICE:ZENER,0.5W,9V,5% | 04713 | SZ50646RL |



http://manoman.sqhill.com

| Component No. | Tektronix Part No. | Serial/Model No. Eff | Dscont | Name & Description | Mfr Code | Mfr Part Number |
|---|---|---|---|---|---|---|
| A25 | 670-5960-03 | | | CKT BOARD ASSY:LOW VOLTAGE REGULATOR | 80009 | 670-5960-03 |
| A25 | —— —— | | | (PART OF 620-0283-XX) | | |
| A25C8 | 290-0778-00 | | | CAP.,FXD,ELCTLT:1UF,+50-10%,50V | 55680 | UEB1H010MAA1TD |
| A25C12 | 290-0778-00 | | | CAP.,FXD,ELCTLT:1UF,+50-10%,50V | 55680 | UEB1H010MAA1TD |
| A25C13 | 283-0047-00 | | | CAP.,FXD,CER DI:270PF,5%,500V | 59821 | 2DDH73L271J |
| A25C15 | 281-0629-00 | | | CAP.,FXD,CER DI:33PF,5%,600V | 04222 | 7027-C0G-330J |
| A25C17 | 290-0778-00 | | | CAP.,FXD,ELCTLT:1UF,+50-10%,50V | 55680 | UEB1H010MAA1TD |
| A25C24 | 283-0110-00 | | | CAP.,FXD,CER DI:0.005UF,+80-20%,150V | 59660 | 855-547-E-502Z |
| A25C36 | 281-0775-00 | | | CAP.,FXD,CER DI:0.1UF,20%,50V | 04222 | MA205E104MAA |
| A25C44 | 283-0067-00 | | | CAP.,FXD,CER DI:0.001UF,10%,200V | 59660 | 835-515-Z5D0102K |
| A25C45 | 281-0511-00 | | | CAP.,FXD,CER DI:22PF,+/-2.2PF,500V | 59660 | 301-000C0G0220K |
| A25C47 | 290-0778-00 | | | CAP.,FXD,ELCTLT:1UF,+50-10%,50V | 55680 | UEB1H010MAA1TD |
| A25C54 | 283-0100-00 | | | CAP.,FXD,CER DI:0.0047UF,10%,200V | 56289 | 2C20C0G472K200B |
| A25C64 | 281-0540-00 | | | CAP.,FXD,CER DI:51PF,5%,500V | 59660 | 301-000U2J0510J |
| A25C68 | 290-0420-00 | | | CAP.,FXD,ELCTLT:0.68UF,20%,75V | 56289 | 150D684X0075A2 |
| A25C69 | 283-0067-00 | | | CAP.,FXD,CER DI:0.001UF,10%,200V | 59660 | 835-515-Z5D0102K |
| A25C84 | 281-0629-00 | | | CAP.,FXD,CER DI:33PF,5%,600V | 04222 | 7027-C0G-330J |
| A25C88 | 290-0420-00 | | | CAP.,FXD,ELCTLT:0.68UF,20%,75V | 56289 | 150D684X0075A2 |
| A25C114 | 281-0605-00 | | | CAP.,FXD,CER DI:200PF,10%,500V | 59660 | 301000Y5D201K |
| A25C156 | 290-0745-00 | | | CAP.,FXD,ELCTLT:22UF,+50-10%,25V | 54473 | ECE-A25V22L |
| A25CR7 | 152-0333-00 | | | SEMICOND DVC DI:SW,SI,55V,200MA,D0-35 | 03508 | DJ2011 |
| A25CR8 | 152-0333-00 | | | SEMICOND DVC DI:SW,SI,55V,200MA,D0-35 | 03508 | DJ2011 |
| A25CR10 | 152-0333-00 | | | SEMICOND DVC DI:SW,SI,55V,200MA,D0-35 | 03508 | DJ2011 |
| A25CR11 | 152-0333-00 | | | SEMICOND DVC DI:SW,SI,55V,200MA,D0-35 | 03508 | DJ2011 |
| A25CR15 | 152-0333-00 | | | SEMICOND DVC DI:SW,SI,55V,200MA,D0-35 | 03508 | DJ2011 |
| A25CR19 | 152-0141-02 | | | SEMICOND DVC,DI:SW,SI,30V,150MA,30V,DO-35 | 12969 | NDP0263 (1N4152) |
| A25CR20 | 152-0141-02 | | | SEMICOND DVC,DI:SW,SI,30V,150MA,30V,DO-35 | 12969 | NDP0263 (1N4152) |
| A25CR21 | 152-0141-02 | | | SEMICOND DVC,DI:SW,SI,30V,150MA,30V,DO-35 | 12969 | NDP0263 (1N4152) |
| A25CR22 | 152-0333-00 | | | SEMICOND DVC DI:SW,SI,55V,200MA,D0-35 | 03508 | DJ2011 |
| A25CR28 | 152-0066-03 | | | SEMICOND DEVICE:RECT,SI,400V,1A | 80009 | 152-0066-03 |
| A25CR45 | 152-0333-00 | | | SEMICOND DVC DI:SW,SI,55V,200MA,D0-35 | 03508 | DJ2011 |
| A25CR49 | 152-0141-02 | | | SEMICOND DVC,DI:SW,SI,30V,150MA,30V,DO-35 | 12969 | NDP0263 (1N4152) |
| A25CR50 | 152-0141-02 | | | SEMICOND DVC,DI:SW,SI,30V,150MA,30V,DO-35 | 12969 | NDP0263 (1N4152) |
| A25CR51 | 152-0141-02 | | | SEMICOND DVC,DI:SW,SI,30V,150MA,30V,DO-35 | 12969 | NDP0263 (1N4152) |
| A25CR52 | 152-0333-00 | | | SEMICOND DVC DI:SW,SI,55V,200MA,D0-35 | 03508 | DJ2011 |
| A25CR58 | 152-0066-03 | | | SEMICOND DEVICE:RECT,SI,400V,1A | 80009 | 152-0066-03 |
| A25CR64 | 152-0333-00 | | | SEMICOND DVC DI:SW,SI,55V,200MA,D0-35 | 03508 | DJ2011 |
| A25CR76 | 152-0066-03 | | | SEMICOND DEVICE:RECT,SI,400V,1A | 80009 | 152-0066-03 |
| A25CR84 | 152-0333-00 | | | SEMICOND DVC DI:SW,SI,55V,200MA,D0-35 | 03508 | DJ2011 |
| A25CR96 | 152-0066-03 | | | SEMICOND DEVICE:RECT,SI,400V,1A | 80009 | 152-0066-03 |
| A25CR114 | 152-0333-00 | | | SEMICOND DVC DI:SW,SI,55V,200MA,D0-35 | 03508 | DJ2011 |
| A25CR132 | 152-0066-03 | | | SEMICOND DEVICE:RECT,SI,400V,1A | 80009 | 152-0066-03 |
| A25CR142 | 152-0423-00 | | | SEMICOND DEVICE:SILICON,400V,3A | 04713 | 1N5000 |
| A25CR143 | 152-0141-02 | | | SEMICOND DVC,DI:SW,SI,30V,150MA,30V,DO-35 | 12969 | NDP0263 (1N4152) |
| A25CR144 | 152-0423-00 | | | SEMICOND DEVICE:SILICON,400V,3A | 04713 | 1N5000 |
| A25CR148 | 152-0141-02 | | | SEMICOND DVC,DI:SW,SI,30V,150MA,30V,DO-35 | 12969 | NDP0263 (1N4152) |
| A25P82 | 131-0589-00 | | | TERMINAL,PIN:0.46 L X 0.025 SQ | 22526 | 48283-029 |
| A25P82 | —— —— | | | (QUANTITY OF 10) | | |
| A25P83 | 131-0589-00 | | | TERMINAL,PIN:0.46 L X 0.025 SQ | 22526 | 48283-029 |
| A25P83 | —— —— | | | (QUANTITY OF 8) | | |
| A25P90 | 131-0608-00 | | | TERMINAL,PIN:0.365 L X 0.025 PH BRZ GOLD | 22526 | 48283-036 |
| A25P90 | —— —— | | | (QUANTITY OF 2) | | |
| A25Q22 | 151-0350-00 | | | TRANSISTOR:SILICON,PNP | 04713 | SPS6700 |



http://manoman.sqhill.com

| Component No. | Tektronix Part No. | Serial/Model No. Eff | Dscont | Name & Description | Mfr Code | Mfr Part Number |
|---|---|---|---|---|---|---|
| A25Q34 | 151-0103-00 | | | TRANSISTOR:SILICON,NPN | 80009 | 151-0103-00 |
| A25Q38 | 151-0134-00 | | | TRANSISTOR:SILICON,PNP | 80009 | 151-0134-00 |
| A25Q52 | 151-0347-00 | | | TRANSISTOR:SILICON,NPN | 56289 | T7916 |
| A25Q68 | 151-0347-00 | | | TRANSISTOR:SILICON,NPN | 56289 | T7916 |
| A25Q88 | 151-0342-00 | | | TRANSISTOR:SILICON,PNP | 07263 | S035928 |
| A25Q118 | 151-0302-00 | | | TRANSISTOR:SILICON,NPN | 07263 | S038487 |
| A25Q144 | 151-0190-05 | | | TRANSISTOR:SILICON,NPN | 80009 | 151-0190-05 |
| A25Q148 | 151-0373-00 | | | TRANSISTOR:SILICON,PNP | 80009 | 151-0373-00 |
| A25R1 | 321-0369-00 | | | RES.,FXD,FILM:68.1K OHM,1%,0.125W | 91637 | CMF55116G68101F |
| A25R2 | 321-0386-00 | | | RES.,FXD,FILM:102K OHM,1%,0.125W | 91637 | MFF1816G10202F |
| A25R3 | 321-0336-00 | | | RES.,FXD,FILM:30.9K OHM,1%,0.125W | 91637 | CMF55116G30901F |
| A25R4 | 321-0290-00 | | | RES.,FXD,FILM:10.2K OHM,1%,0.125W | 91637 | CMF55116G10201F |
| A25R5 | 321-0319-00 | | | RES.,FXD,FILM:20.5K OHM,1%,0.125W | 91637 | MFF1816G20501F |
| A25R8 | 315-0332-00 | | | RES.,FXD,CMPSN:3.3K OHM,5%,0.25W | 57668 | NTR25J-E03K3 |
| A25R10 | 323-0265-00 | | | RES.,FXD,FILM:5.62K OHM,1%,0.50W | 75042 | CECT0-5621F |
| A25R12 | 315-0512-00 | | | RES.,FXD,CMPSN:5.1K OHM,5%,0.25W | 57668 | NTR25J-E05K1 |
| A25R13 | 315-0103-00 | | | RES.,FXD,CMPSN:10K OHM,5%,0.25W | 57668 | NTR25J-E10K0 |
| A25R14 | 321-0730-06 | | | RES.,FXD,FILM:5.703K OHM,0.25%,0.125W | 91637 | MFF1816C57030C |
| A25R15 | 311-1225-00 | | | RES.,VAR,NONWIR:1K OHM,20%,0.50W | 32997 | 3386F-T04-102 |
| A25R16 | 321-0331-09 | | | RES.,FXD,FILM:27.4K OHM,1%,0.125W | 91637 | MFF1816C27401F |
| A25R17 | 315-0151-00 | | | RES.,FXD,CMPSN:150 OHM,5%,0.25W | 57668 | NTR25J-E150E |
| A25R21 | 315-0104-00 | | | RES.,FXD,CMPSN:100K OHM,5%,0.25W | 57668 | NTR25J-E100K |
| A25R22 | 315-0821-00 | | | RES.,FXD,CMPSN:820 OHM,5%,0.25W | 57668 | NTR25J-E 820E |
| A25R24 | 315-0331-00 | | | RES.,FXD,CMPSN:330 OHM,5%,0.25W | 57668 | NTR25J-E330E |
| A25R25 | 315-0471-00 | | | RES.,FXD,CMPSN:470 OHM,5%,0.25W | 57668 | NTR25J-E470E |
| A25R26 | 315-0181-00 | | | RES.,FXD,CMPSN:180 OHM,5%,0.25W | 57668 | NTR25J-E180E |
| A25R27 | 315-0512-00 | | | RES.,FXD,CMPSN:5.1K OHM,5%,0.25W | 57668 | NTR25J-E05K1 |
| A25R28 | 308-0365-00 | | | RES.,FXD,WW:1.5 OHM,5%,3W | 91637 | CW2B-1R500J T/R |
| A25R32 | 315-0432-00 | | | RES.,FXD,CMPSN:4.3K OHM,5%,0.25W | 57668 | NTR25J-E04K3 |
| A25R34 | 304-0102-00 | | | RES.,FXD,CMPSN:1K OHM,10%,1W | 01121 | GB1021 |
| A25R36 | 315-0121-00 | | | RES.,FXD,CMPSN:120 OHM,5%,0.25W | 57668 | NTR25J-E 120E |
| A25R37 | 315-0123-00 | | | RES.,FXD,CMPSN:12K OHM,5%,0.25W | 57668 | NTR25J-E12K0 |
| A25R38 | 301-0182-00 | | | RES.,FXD,CMPSN:1.8K OHM,5%,0.5W | 57668 | TR50J-E1K8 |
| A25R42 | 315-0203-00 | | | RES.,FXD,CMPSN:20K OHM,5%,0.25W | 57668 | NTR25J-E20K0 |
| A25R44 | 315-0103-00 | | | RES.,FXD,CMPSN:10K OHM,5%,0.25W | 57668 | NTR25J-E10K0 |
| A25R45 | 321-0924-07 | | | RES.,FXD,FILM:40K OHM,0.1%,0.125W | 91637 | MFF1816C40001B |
| A25R46 | 321-0924-07 | | | RES.,FXD,FILM:40K OHM,0.1%,0.125W | 91637 | MFF1816C40001B |
| A25R47 | 315-0151-00 | | | RES.,FXD,CMPSN:150 OHM,5%,0.25W | 57668 | NTR25J-E150E |
| A25R51 | 315-0104-00 | | | RES.,FXD,CMPSN:100K OHM,5%,0.25W | 57668 | NTR25J-E100K |
| A25R52 | 315-0821-00 | | | RES.,FXD,CMPSN:820 OHM,5%,0.25W | 57668 | NTR25J-E 820E |
| A25R54 | 315-0511-00 | | | RES.,FXD,CMPSN:510 OHM,5%,0.25W | 57668 | NTR25J-E 510E |
| A25R55 | 315-0471-00 | | | RES.,FXD,CMPSN:470 OHM,5%,0.25W | 57668 | NTR25J-E470E |
| A25R56 | 315-0181-00 | | | RES.,FXD,CMPSN:180 OHM,5%,0.25W | 57668 | NTR25J-E180E |
| A25R57 | 315-0512-00 | | | RES.,FXD,CMPSN:5.1K OHM,5%,0.25W | 57668 | NTR25J-E05K1 |
| A25R58 | 308-0686-00 | | | RES.,FXD,WW:2.2 OHM,5%,2W | 75042 | BWH-2R200J |
| A25R61 | 321-0332-07 | | | RES.,FXD,FILM:28K OHM,0.1%,0.125W | 91637 | MFF1816C28001B |
| A25R62 | 321-1296-07 | | | RES.,FXD,FILM:12K OHM,0.1%,0.125W | 91637 | MFF1816C12001B |
| A25R63 | 315-0152-00 | | | RES.,FXD,CMPSN:1.5K OHM,5%,0.25W | 57668 | NTR25J-E01K5 |
| A25R67 | 315-0123-00 | | | RES.,FXD,CMPSN:12K OHM,5%,0.25W | 57668 | NTR25J-E12K0 |
| A25R68 | 315-0302-00 | | | RES.,FXD,CMPSN:3K OHM,5%,0.25W | 57668 | NTR25J-E03K0 |
| A25R69 | 315-0822-00 | | | RES.,FXD,CMPSN:8.2K OHM,5%,0.25W | 57668 | NTR25J-E 8K2 |
| A25R73 | 315-0201-00 | | | RES.,FXD,CMPSN:200 OHM,5%,0.25W | 57668 | NTR25J-E200E |
| A25R74 | 315-0393-00 | | | RES.,FXD,CMPSN:39K OHM,5%,0.25W | 57668 | NTR25J-E39K0 |
| A25R75 | 308-0804-00 | | | RES.,FXD,NONWIR:0.025 OHM,5%,0.5W | 80009 | 308-0804-00 |



http://manoman.sqhill.com

| Component No. | Tektronix Part No. | Serial/Model No. Eff | Dscont | Name & Description | Mfr Code | Mfr Part Number |
|---|---|---|---|---|---|---|
| A25R76 | 315-0151-00 | | | RES.,FXD,CMPSN:150 OHM,5%,0.25W | 57668 | NTR25J-E150E |
| A25R77 | 315-0432-00 | | | RES.,FXD,CMPSN:4.3K OHM,5%,0.25W | 57668 | NTR25J-E04K3 |
| A25R80 | 321-0924-07 | | | RES.,FXD,FILM:40K OHM,0.1%,0.125W | 91637 | MFF1816C40001B |
| A25R81 | 321-1296-07 | | | RES.,FXD,FILM:12K OHM,0.1%,0.125W | 91637 | MFF1816C12001B |
| A25R82 | 315-0912-00 | | | RES.,FXD,CMPSN:9.1K OHM,5%,0.25W | 57668 | NTR25J-E09K1 |
| A25R83 | 315-0102-00 | | | RES.,FXD,CMPSN:1K OHM,5%,0.25W | 57668 | NTR25JE01K0 |
| A25R87 | 315-0123-00 | | | RES.,FXD,CMPSN:12K OHM,5%,0.25W | 57668 | NTR25J-E12K0 |
| A25R88 | 315-0302-00 | | | RES.,FXD,CMPSN:3K OHM,5%,0.25W | 57668 | NTR25J-E03K0 |
| A25R93 | 315-0201-00 | | | RES.,FXD,CMPSN:200 OHM,5%,0.25W | 57668 | NTR25J-E200E |
| A25R94 | 315-0393-00 | | | RES.,FXD,CMPSN:39K OHM,5%,0.25W | 57668 | NTR25J-E39K0 |
| A25R95 | 308-0804-00 | | | RES.,FXD,NONWIR:0.025 OHM,5%,0.5W | 80009 | 308-0804-00 |
| A25R96 | 315-0151-00 | | | RES.,FXD,CMPSN:150 OHM,5%,0.25W | 57668 | NTR25J-E150E |
| A25R97 | 315-0432-00 | | | RES.,FXD,CMPSN:4.3K OHM,5%,0.25W | 57668 | NTR25J-E04K3 |
| A25R113 | 321-1713-07 | | | RES.,FXD,FILM:36K OHM,0.1%,0.125W | 24546 | NE55E3602B |
| A25R114 | 321-0926-07 | | | RES.,FXD,FILM:4K OHM,0.1%,0.125W | 91637 | CMF55116C40000B |
| A25R121 | 315-0512-00 | | | RES.,FXD,CMPSN:5.1K OHM,5%,0.25W | 57668 | NTR25J-E05K1 |
| A25R126 | 315-0131-00 | | | RES.,FXD,CMPSN:130 OHM,5%,0.25W | 57668 | NTR25J-E 130E |
| A25R127 | 315-0203-00 | | | RES.,FXD,CMPSN:20K OHM,5%,0.25W | 57668 | NTR25J-E20K0 |
| A25R128 | 315-0203-00 | | | RES.,FXD,CMPSN:20K OHM,5%,0.25W | 57668 | NTR25J-E20K0 |
| A25R129 | 315-0101-00 | | | RES.,FXD,CMPSN:100 OHM,5%,0.25W | 57668 | NTR25J-E 100E |
| A25R131 | 315-0362-00 | | | RES.,FXD,CMPSN:3.6K OHM,5%,0.25W | 57668 | NTR25J-E 3K6 |
| A25R132 | 315-0151-00 | | | RES.,FXD,CMPSN:150 OHM,5%,0.25W | 57668 | NTR25J-E150E |
| A25R133 | 308-0804-00 | | | RES.,FXD,NONWIR:0.025 OHM,5%,0.5W | 80009 | 308-0804-00 |
| A25R134 | 308-0804-00 | | | RES.,FXD,NONWIR:0.025 OHM,5%,0.5W | 80009 | 308-0804-00 |
| A25R135 | 315-0470-00 | | | RES.,FXD,CMPSN:47 OHM,5%,0.25W | 57668 | NTR25J-E47E0 |
| A25R136 | 315-0432-00 | | | RES.,FXD,CMPSN:4.3K OHM,5%,0.25W | 57668 | NTR25J-E04K3 |
| A25R141 | 315-0822-00 | | | RES.,FXD,CMPSN:8.2K OHM,5%,0.25W | 57668 | NTR25J-E 8K2 |
| A25R142 | 315-0103-00 | | | RES.,FXD,CMPSN:10K OHM,5%,0.25W | 57668 | NTR25J-E10K0 |
| A25R143 | 315-0243-00 | | | RES.,FXD,CMPSN:24K OHM,5%,0.25W | 57668 | NTR25J-E24K0 |
| A25R144 | 315-0562-00 | | | RES.,FXD,CMPSN:5.6K OHM,5%,0.25W | 57668 | NTR25J-E05K6 |
| A25R145 | 315-0221-00 | | | RES.,FXD,CMPSN:220 OHM,5%,0.25W | 57668 | NTR25J-E220E |
| A25R148 | 308-0702-00 | | | RES.,FXD,WW:0.33 OHM,5%,2W | 75042 | BWH-R3300J |
| A25R152 | 301-0561-00 | | | RES.,FXD,CMPSN:560 OHM,5%,0.50W | 01121 | EB5615 |
| A25R156 | 301-0431-00 | | | RES.,FXD,CMPSN:430 OHM,5%,0.5W | 57668 | TR50J-E 430E |
| A25TP00 | 214-0579-00 | | | TERM,TEST POINT:BRS CD PL | 80009 | 214-0579-00 |
| A25U15 | 156-0067-12 | | | MICROCIRCUIT,LI:OPERATIONAL AMPLIFIER | 01295 | UA741CJG |
| A25U45 | 156-0067-12 | | | MICROCIRCUIT,LI:OPERATIONAL AMPLIFIER | 01295 | UA741CJG |
| A25U64 | 156-0158-03 | | | MICROCIRCUIT,LI:DUAL OPNL AMPL,CHK | 80009 | 156-0158-03 |
| A25U84 | 156-0158-03 | | | MICROCIRCUIT,LI:DUAL OPNL AMPL,CHK | 80009 | 156-0158-03 |
| A25U114 | 156-0158-03 | | | MICROCIRCUIT,LI:DUAL OPNL AMPL,CHK | 80009 | 156-0158-03 |
| A25VR10 | 152-0217-00 | | | SEMICOND DVC,DI:ZEN,SI,8.2V,5%,0.4W | 04713 | SZG20 |
| A25VR12 | 152-0212-00 | | | SEMICOND DEVICE:ZENER,0.5W,9V,5% | 04713 | SZ50646RL |
| A25VR17 | 152-0283-00 | | | SEMICOND DEVICE:ZENER,0.4W,43V,5% | 12954 | DZ750903B1N976B |
| A25VR32 | 152-0281-00 | | | SEMICOND DEVICE:ZENER,0.4W,22V,5% | 12954 | 1N969B |
| A25VR36 | 152-0281-00 | | | SEMICOND DEVICE:ZENER,0.4W,22V,5% | 12954 | 1N969B |
| A25VR47 | 152-0283-00 | | | SEMICOND DEVICE:ZENER,0.4W,43V,5% | 12954 | DZ750903B1N976B |
| A25VR152 | 152-0175-01 | | | SEMICOND DEVICE:ZENER,0.4W,5.6V,5% | 04713 | SZG5021RL |
| A25VR156 | 152-0175-01 | | | SEMICOND DEVICE:ZENER,0.4W,5.6V,5% | 04713 | SZG5021RL |



http://manoman.sqhill.com

| Component No. | Tektronix Part No. | Serial/Model No. Eff | Dscont | Name & Description | Mfr Code | Mfr Part Number |
|---|---|---|---|---|---|---|
| | | | | CHASSIS PARTS, ALSO SEE POWER SUPPLY | | |
| B90 | 119-1545-01 | | | FAN,TUBEAXIAL:12V,4.8W,RPM,35CFM | 82877 | ST12A3 |
| C1098 | 283-0178-00 | | | CAP.,FXD,CER DI:0.1UF,+80-20%,100V | 04222 | ADVISE |
| DL592 | 119-1798-00 | | | DELAY LINE,ELEC:52 NS,50 OHM | 80009 | 119-1798-00 |
| DS308 | 150-0121-07 | | | LAMP,CARTRIDGE:5V,0.6A,GREEN,4.125L,5-N | 80009 | 150-0121-07 |
| DS1970 | 150-1033-00 | | | LT EMITTING DIO:AMBER,585NM,40MA MAX | 50434 | HLMP 1401 |
| DS1994 | 150-1031-00 | | | LT EMITTING DIO:RED,650NM,40MA MAX | 53184 | XC209R |
| J30 | 131-0771-00 | | | CONN,RCPT,ELEC:4 CONT,QUICK DISCONNECT | 91836 | 1904-2M58 |
| J33 | 131-0771-00 | | | CONN,RCPT,ELEC:4 CONT,QUICK DISCONNECT | 91836 | 1904-2M58 |
| J81 | 131-0955-00 | | | CONN,RCPT,ELEC:BNC,FEMALE | 13511 | 31-279 |
| J83 | 131-0955-00 | | | CONN,RCPT,ELEC:BNC,FEMALE | 13511 | 31-279 |
| J95 | 131-1315-01 | | | CONN,RCPT,ELEC:BNC,FEMALE | 24931 | 28JR 306-1 |
| J396 | 131-1315-01 | | | CONN,RCPT,ELEC:BNC,FEMALE | 24931 | 28JR 306-1 |
| J497 | 131-1315-01 | | | CONN,RCPT,ELEC:BNC,FEMALE | 24931 | 28JR 306-1 |
| J1916 | 131-1315-01 | | | CONN,RCPT,ELEC:BNC,FEMALE | 24931 | 28JR 306-1 |
| J1925 | 131-1315-01 | | | CONN,RCPT,ELEC:BNC,FEMALE | 24931 | 28JR 306-1 |
| J1944 | 131-1315-01 | | | CONN,RCPT,ELEC:BNC,FEMALE | 24931 | 28JR 306-1 |
| LR1097 | 108-0685-00 | | | COIL,RF:62NH | 80009 | 108-0685-00 |
| LR1098 | 108-0685-00 | | | COIL,RF:62NH | 80009 | 108-0685-00 |
| R90 | 308-0175-00 | | | RES.,FXD,WW:10 OHM,5%,10W | 91637 | HL1202Z-7-10R00J |
| R1099 | 307-0292-21 | | | RES.,FXD,FILM:(2) 172 OHM,(2) 33.7 OHM | 80009 | 307-0292-21 |
| S10 | 260-1709-00 | | | SWITCH,PUSH:POWER | 77342 | A9M1-762-6-3 |
| S70 | 260-0638-00 | | | SW,THERMOSTATIC:10A,240V,OPEN 75 DEG C | 93410 | 430-364 |
| S1988 | 260-0247-00 | | | SWITCH,PUSH:SPST,1A,115VAC | 81073 | 30YY1009 |
| V1850 | 154-0783-00 | | | ELECTRON TUBE:CRT,P31,T7100-31-2 | 80009 | 154-0783-00 |



http://manoman.sqhill.com

# DIAGRAMS AND CIRCUIT BOARD ILLUSTRATIONS

## Symbols

Graphic symbols and class designation letters are based on ANSI Standard Y32.2-1975.

Logic symbology is based on ANSI Y32.14-1973 in terms of positive logic. Logic symbols depict the logic function performed and may differ from the manufacturer's data.

The overline on a signal name indicates that the signal performs its intended function when it is in the low state.

Abbreviations are based on ANSI Y1.1-1972.

Other ANSI standards that are used in the preparation of diagrams by Tektronix, Inc. are:

| | |
|---|---|
| Y14.15, 1966 | Drafting Practices. |
| Y14.2, 1973 | Line Conventions and Lettering. |
| Y10.5, 1968 | Letter Symbols for Quantities Used in Electrical Science and Electrical Engineering. |

American National Standard Institute
1430 Broadway
New York, New York 10018

## Component Values

Electrical components shown on the diagrams are in the following units unless noted otherwise:

Capacitors = Values one or greater are in picofarads (pF). Values less than one are in microfarads ($\mu$F).
Resistors = Ohms ($\Omega$).

## The information and special symbols below may appear in this manual.

### Assembly Numbers and Grid Coordinates

Each assembly in the instrument is assigned an assembly number (e.g., A20). The assembly number appears on the circuit board outline on the diagram, in the title for the circuit board component location illustration, and in the lookup table for the schematic diagram and corresponding component locator illustration. The Replaceable Electrical Parts list is arranged by assemblies in numerical sequence; the components are listed by component number *(see following illustration for constructing a component number).

The schematic diagram and circuit board component location illustration have grids. A lookup table with the grid coordinates is provided for ease of locating the component. Only the components illustrated on the facing diagram are listed in the lookup table. When more than one schematic diagram is used to illustrate the circuitry on a circuit board, the circuit board illustration may only appear opposite the first diagram on which it was illustrated; the lookup table will list the diagram number of other diagrams that the circuitry of the circuit board appears on.

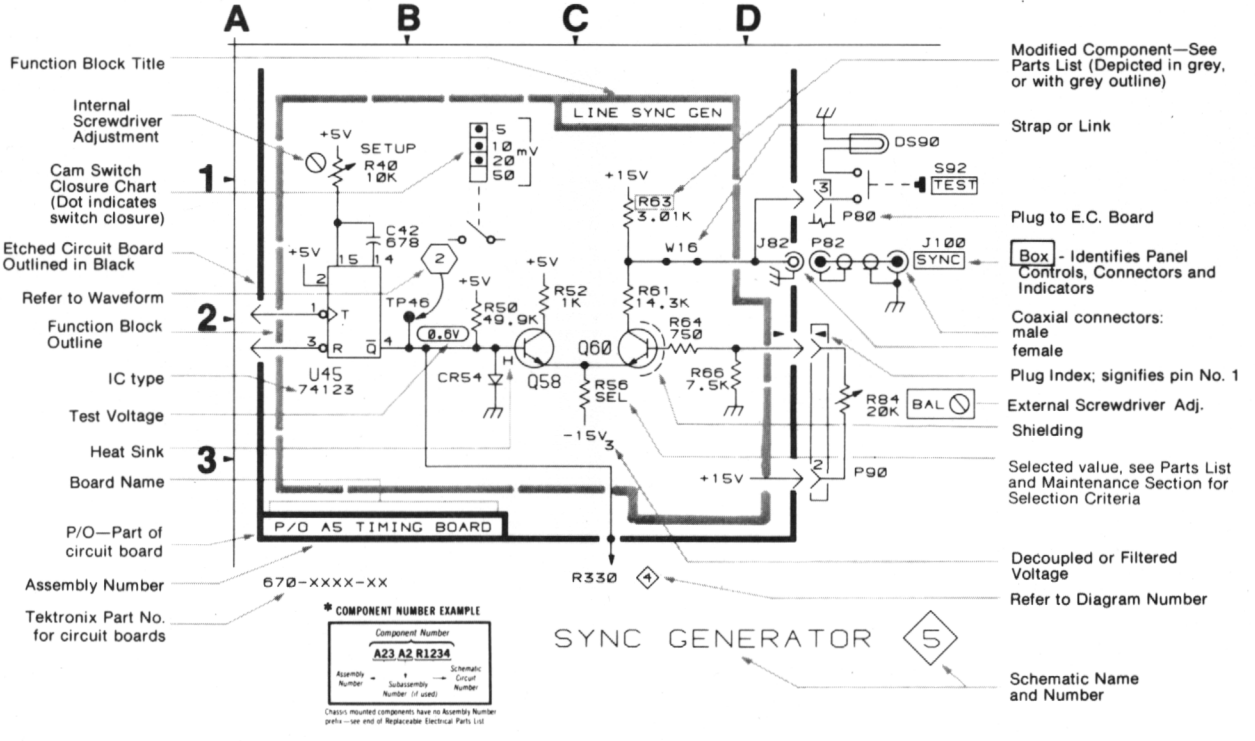


http://manoman.sghill.com

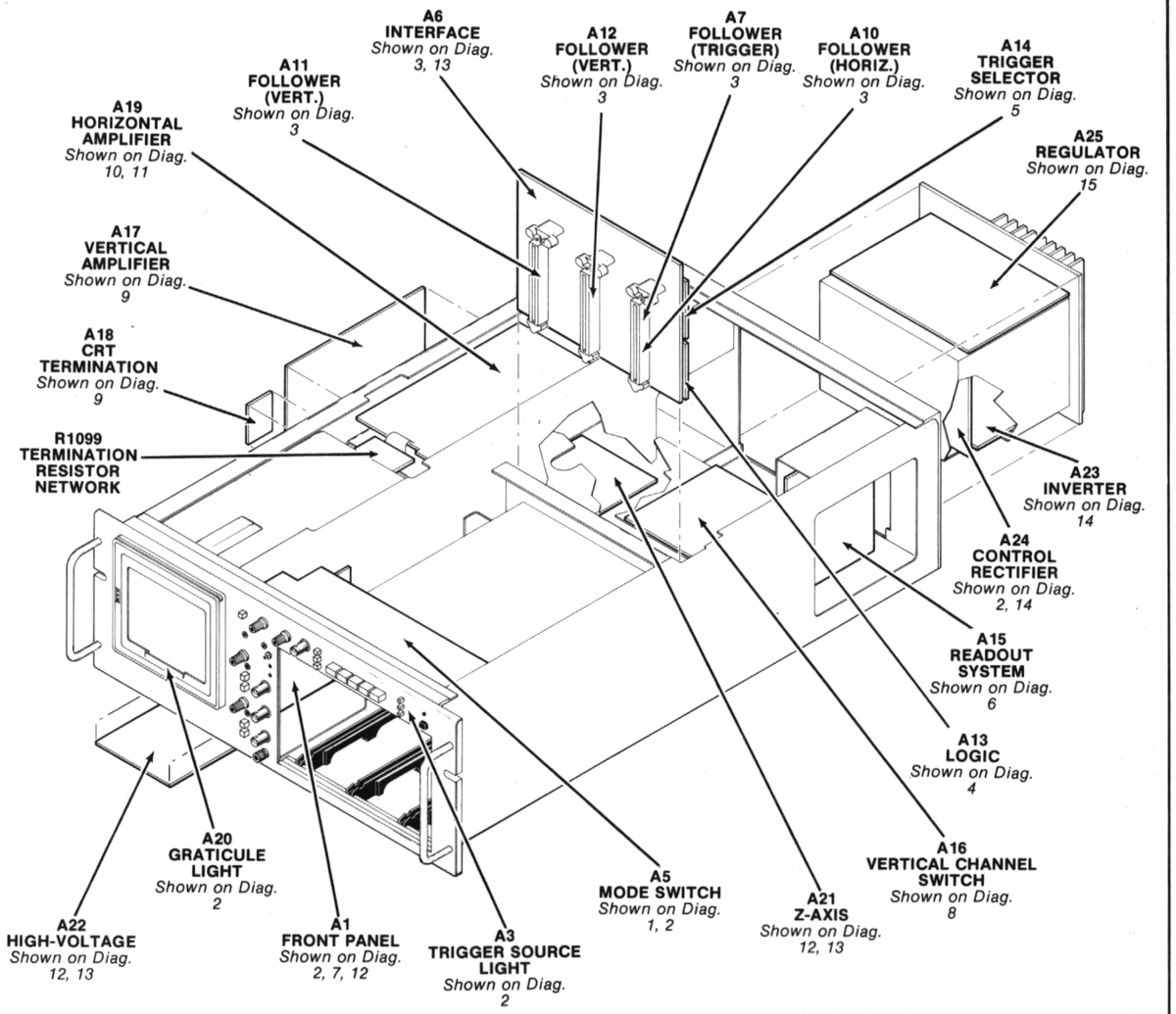


**BOARD LOCATOR BY BOARD NAME**

| Board Name | Assembly Number | Diagram Number |
|---|---|---|
| Control Rectifier Board | A24 | 2,14 |
| CRT Termination Board | A18 | 9 |
| Follower Board (Horizontal) | A10 | 3 |
| Follower Board (Trigger) | A7 | 3 |
| Follower Board (Vertical) | A11 | 3 |
| Follower Board (Vertical) | A12 | 3 |
| Front Panel Board | A1 | 2,7,12 |
| Graticule Light Board | A20 | 2 |
| High-Voltage Board | A22 | 12,13 |
| Horizontal Amplifier Board | A19 | 10,11 |
| Interface Board | A6 | 3,13 |
| Inverter Board | A23 | 14 |
| Logic Board | A13 | 4 |
| Mode Switch Board | A5 | 2,1 |
| Readout System Board | A15 | 6 |
| Regulator Board | A25 | 15 |
| Trigger Selector Board | A14 | 5 |
| Trigger Source Light Board | A3 | 2 |
| Vertical Amplifier Board | A17 | 9 |
| Vertical Channel Switch Board | A16 | 8 |
| Z-Axis Board | A21 | 12,13 |

**BOARD LOCATOR BY ASSEMBLY NUMBER**

| Assembly Number | Board Name | Diagram Number |
|---|---|---|
| A1 | Front Panel Board | 2,7,12 |
| A3 | Trigger Source Light Board | 2 |
| A5 | Mode Switch Board | 2,1 |
| A6 | Interface Board | 3,13 |
| A7 | Follower Board (Trigger) | 3 |
| A10 | Follower Board (Horizontal) | 3 |
| A11 | Follower Board (Vertical) | 3 |
| A12 | Follower Board (Vertical) | 3 |
| A13 | Logic Board | 4 |
| A14 | Trigger Selector Board | 5 |
| A15 | Readout System Board | 6 |
| A16 | Vertical Channel Switch Board | 8 |
| A17 | Vertical Amplifier Board | 9 |
| A18 | CRT Termination Board | 9 |
| A19 | Horizontal Amplifier Board | 10,11 |
| A20 | Graticule Light Board | 2 |
| A21 | Z-Axis Board | 12,13 |
| A22 | High-Voltage Board | 12,13 |
| A23 | Inverter Board | 14 |
| A24 | Control Rectifier Board | 2,14 |
| A25 | Regulator Board | 15 |

5039-801

**Figure 8-1. Location of Circuit Boards in R7103.**

***NOTE***

***LEAD CONFIGURATIONS AND CASE STYLES ARE TYPICAL, BUT MAY VARY DUE TO VENDOR CHANGES OR INSTRUMENT MODIFICATIONS.***

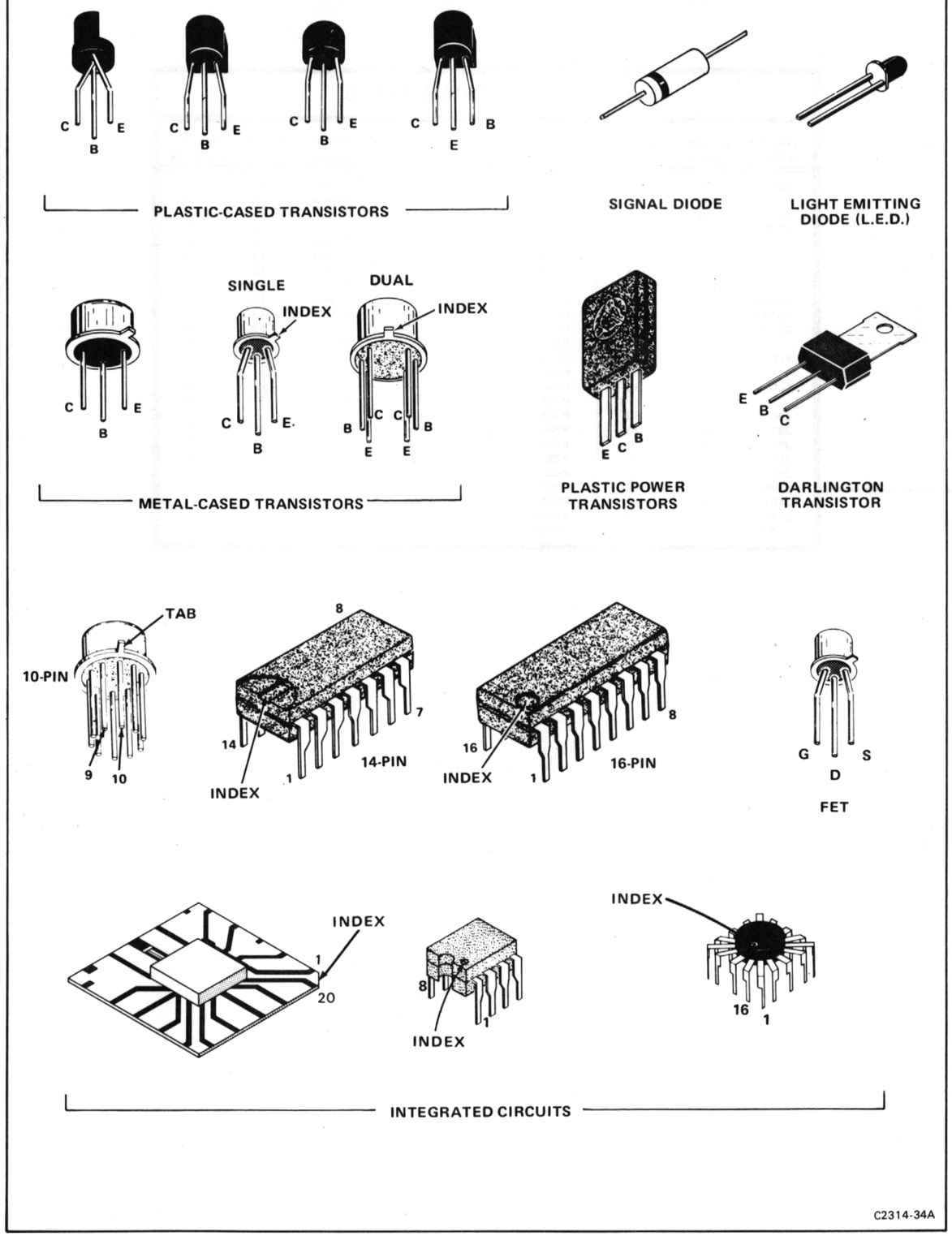


C2314-34A

**Figure 8-2. Semiconductor lead configurations.**

http://manoman.sqhill.com

# CHASSIS MOUNTED PARTS

| CIRCUIT NUMBER | SCHEM NUMBER | SCHEM LOCATION |
|---|---|---|
| B90 | 15 | 3A |
| C37 | 14 | 1D |
| C179 | 14 | 3F |
| C1098 | 11 | 4G |
| DL592 | 8 | 1B |
| DS308 | 2 | 2A |
| DS1970 | 12 | 3C |
| DS1994 | 12 | 3E |
| F10 | 14 | 3A |
| FL10 | 14 | 3A |
| J30 | 6 | 4G |
| J33 | 6 | 4G |
| J81 | 3 | 2G |
| J83 | 3 | 3G |
| J95 | 4 | 4A |
| J396 | 2 | 5E |
| J497 | 5 | 4F |
| J1916 | 7 | 4B |
| J1925 | 7 | 1D |
| J1944 | 7 | 1E |
| J1989 | 12 | 5D |
| L37 | 14 | 1D |
| LR1097 | 11 | 4G |
| LR1098 | 11 | 4G |
| P10 | 14 | 3A |
| P11 | 14 | 3A |
| P85 | 13 | 2D |
| P89 | 13 | 2C |
| P314 | 2 | 1B |
| P680 | 8 | 4C |
| P782 | 11 | 4A |
| P782 | 9 | 5B |
| P783 | 9 | 3G |
| P789 | 9 | 4A |
| P790 | 11 | 4A |
| P790 | 9 | 2A |
| P882 | 10 | 4C |
| P882 | 11 | 4D |
| P883 | 9 | 3G |
| P1602 | 13 | 3F |
| P1603 | 13 | 2F |
| P1605 | 13 | 2E |
| P1609 | 13 | E3 |
| P1702 | 13 | 5F |
| P1703 | 13 | 4G |
| P1705 | 13 | 2E |
| P1709 | 13 | E3 |
| P1740 | 13 | 4A |
| P1785 | 13 | 2A |
| P1804 | 13 | 1A |
| P1806 | 13 | 2A |
| P1810 | 13 | 2G |
| P1813 | 13 | 3G |
| P2006 | 13 | 4D |
| R90 | 15 | 3A |
| R1099 | 11 | 4G |
| S10 | 14 | 3A |
| S72 | 14 | 4E |
| S99 | 15 | 3C |
| S1988 | 12 | 4D |

http://manoman.sqhill.com

A3 TRIGGER SOURCE LIGHT BOARD (2)
P346
P306
V MODE
+5VL
LEFT
RIGHT
-50V
-15V
GND
INT REFERENCE
+15V
+50V
ASTIG
FOCUS
TRACE ROTATION
P2006
A20 GRATICULE LIGHTS BOARD (2)
P304
+15V CAMERA
CAMERA TRIG
CAMERA COM
LIGHT SUPPLY
LIGHT COM
P309
CAMERA TRIG
ADD
LEFT
RIGHT
CHOP
ALT
BEAMFINDER
GND
INTENSITY
READOUT INTENSITY
P9
P314
CAMERA CONNECTOR
DISPLAY RIGHT COMMAND
RIGHT
ADD
GND
-50V
-15V
+50V
+15V
+5V
+5VL
P303
P3
P308
GND
+5V
DS308 POWER
J392
J396 CALIBRATOR
CALIBRATOR
A5 MODE SWITCH BOARD (2)
P310
READOUT INTENSITY
LIGHT COM
LIGHT SUPPLY
+15V CAMERA
TO FRONT PANEL
P1909
S1988
DS1970
DS1994
RESET
GND
LIMITED VIEWING TIME
GND
SHUTDOWN
GND
P1910
A1 FRONT PANEL BOARD (2)(7)(12)
P1900
P18
RESET
GND
SWEEP
GND
+GATE
GND
READOUT SINGLE SHOT
GND
J1925 +GATE
J1924
READOUT SINGLE SHOT
J1992
J1944 +SAWTOOTH
J1943
P1917
+15V CAMERA
LIGHT COM
LIGHT SUPPLY
GRAT POT
P1904
Z AXIS OFF
-15V
+5V
INT REFERENCE
+15V
AUX READOUT INTEN
GND
SCREEN I SENSE
J1916 GRATICULE/ READOUT SINGLE SHOT
J1917
A6 INTERFACE BOARD (3)(6)
A10 FOLLOWER BOARD
J3-A11
J3-B11
J970 +A
J971 -A
A19 HORIZONTAL AMPLIFIER BOARD (6)(11)
+50V
P1094
P882
P89
AVE PLATE E
+50V
+15V
+5V
GND
-15V
-50V
X-Y INHIBIT
BEAMFINDER
DISPLAY B
P80
+15V
+5V
GND
-15V
ADD
DISPLAY RIGHT COMMAND
X-Y INHIBIT
P680
A16 VERTICAL CHANNEL SWITCH BOARD (8)
A11 FOLLOWER BOARD
J1-A11
J1-B11
J1-A13
J1-B13
J602 +
J603 -
LEFT
J502 +
J503 -
RIGHT
-SIG
+SIG
J592
J694
DL592
A12 FOLLOWER BOARD
J2-A11
J2-B11
J2-A13
J2-B13
J400 +
J401 -
TRIG LEFT
J200 +
J201 -
TRIG RIGHT
A7 FOLLOWER BOARD
J3-A20
J3-B20
J270 +
J271 -
TRIG
A14 TRIGGER SELECTOR BOARD (5)
J496
J497 SIG OUT (FRONT PANEL)
P782
X READOUT
+50V
+15V
+5V
GND
-15V
X-Y INHIBIT
BEAMFINDER
DISPLAY B
FAULT
P789
AVE PLATE E
+50V
+15V
+5V
GND
-15V
-50V
X-Y INHIBIT
BEAMFINDER
DISPLAY B
A17 VERTICAL AMPLIFIER BOARD (9)(11)
J702 - SIG
J704 + SIG
P790
AUX Y AXIS
GND
Y READOUT
GND
X READOUT
GND
AUX Y AXIS
J78
P67
TS1
TS2
TS3
TS4
TS5
TS6
TS7
TS8
TS9
TS10
P3467
Y READOUT
X READOUT
J3405
J3404
Z READOUT
J3403
J1632
P3446
READOUT INTENSITY
NC
CHANNEL ADD4
CHANNEL ADD2
CHANNEL ADD1
INDENTIFY
NC
Z AXIS INHIBIT
READOUT GATE
X-Y INHIBIT
P46
J30 PROBE POWER (REAR PANEL)
J33
P75
+5V
+15V
GND
-15V
P3475
A15 READOUT BOARD (6)
ROW DATA
J202
J3402
COLUMN DATA
J201
J3401
P85
+50V
+15V
+5V
GND
-15V
-50V
INT SENSE
FAULT SENSE
AVE PLATE E
A21 Z-AXIS BOARD (12)(13)
FOCUS
CATHODE (2,5)
GRID (3)
AVE PLATE E
P1602
P1603
P1605
P1609
J1606 Z AXIS SIGNAL
TERMINATION RESISTOR NETWORK R1099 (11)
FLEXCON
P783
P883
A18 TERMINATION BOARD (9)
CRT (13)
12.5kV
P1806
- 50V
- 15V
GND
INT REFERENCE
+15V
+50V
ASTIG
FOCUS
TRACE ROTATION
P1702
HEATER (1)
HEATER (14)
P1703
STIGMATOR (11)
D3/D4 SHIELD (13)
ASTIGMATISM (10)
ION TRAP (7)
P1810
VERTICAL LINEARITY
GEOMETRY (BOWTIE)
HORIZONTAL SENSITIVITY
P1813
Y ALIGN
GND
TRACE ROTATION
GND
D1/D2 SHIELD
AVE PLATE E
P1819
EXIT ELECTRODE
MCP INPUT
MCP OUTPUT
HORIZONTAL BOWING
A22 HIGH VOLTAGE BOARD (12)(13)
P1804
Z AXIS OFF
-15V
+5V
INT REFERENCE
+15V
AUX READOUT INTEN
GND
SCREEN I SENSE
P1705
+105V
+15V
+5V
-15V
AVE PLATE E
GND
Z AXIS LF SIGNAL
Z AXIS OFF
P1709
CATHODE
NC
-2400V
Z AXIS LF SIGNAL
NC
NC
PRIME FOCUS
P1785
+50V
+15V
+5V
GND
-15V
-50V
INT SENSE
FAULT SENSE
AVE PLATE E
P1740
108V
GND
GND
108V
A23 INVERTER BOARD (14)
A24 CONTROL RECTIFIER BOARD (14)
A25 REGULATOR BOARD (14)(15)
TO REAR PANEL
P17
+15V CAMERA
LIGHT COM
LIGHT SUPPLY
GRAT POT
-15V
P82
P82
LINE TRIGGER
+5V
-15V
-50V
+50V
+15V
GND
GND
L COM
+5VL
S99 CONTROL ILLUMINATION
P99
+3.5V
+5VL
+5V
P83
P83
NC
FAULT SENSE
GNDS
+5VS
-50VS
+50VS
-15VS
+15VS
B90 FAN
P90
GND
+15V
P40
108V
GND
GND
108V
J95 Z-AXIS INPUT
J395
Z-AXIS INPUT
A13 LOGIC BOARD (4)
Z AXIS SIGNAL
J406
P87
SINGLE SWEEP READY
SINGLE SWEEP RESET
J83 SINGLE SWEEP READY
J81 SINGLE SWEEP RESET

R7103

5039-881

CABLE DISTRIBUTION (1)

http://manoman.sqhill.com

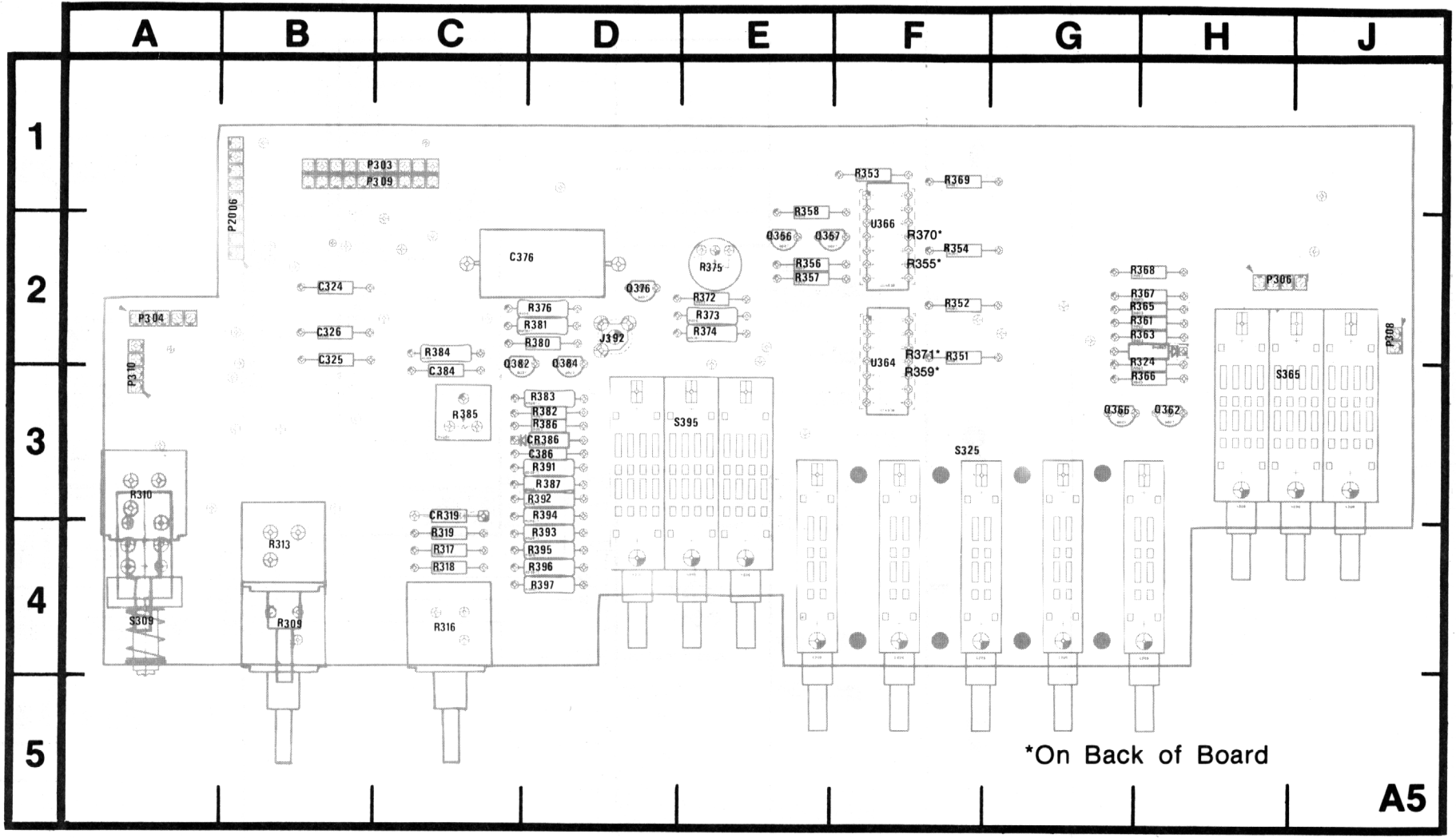


5039-804

http://manoman.sqhill.com

**Figure 8-4. A5—Mode Switch Board assembly.**

# MODE SWITCH AND CALIBRATOR DIAGRAM 2

## ASSEMBLY A1

| CIRCUIT NUMBER | SCHEM LOCATION | BOARD LOCATION | CIRCUIT NUMBER | SCHEM LOCATION | BOARD LOCATION |
|---|---|---|---|---|---|
| P1910 | 1C | 5D | R1931 | * | 3D |
| P1917 | 1C | 5D | R1941 | * | 2C |
| R301 | 1C | 4D | | | |

*Partial A1 also shown on diagrams 7 and 12.*

## ASSEMBLY A3

| CIRCUIT NUMBER | SCHEM LOCATION | BOARD LOCATION | CIRCUIT NUMBER | SCHEM LOCATION | BOARD LOCATION |
|---|---|---|---|---|---|
| DS342 | 3A | ** | DS346 | 3A | ** |
| DS345 | 3A | ** | P346 | 3A | ** |

## ASSEMBLY A20

| CIRCUIT NUMBER | SCHEM LOCATION | BOARD LOCATION | CIRCUIT NUMBER | SCHEM LOCATION | BOARD LOCATION |
|---|---|---|---|---|---|
| DS304 | 1A | ** | DS306 | 1A | ** |
| DS305 | 1A | ** | | | |

## ASSEMBLY A5

| CIRCUIT NUMBER | SCHEM LOCATION | BOARD LOCATION | CIRCUIT NUMBER | SCHEM LOCATION | BOARD LOCATION | CIRCUIT NUMBER | SCHEM LOCATION | BOARD LOCATION |
|---|---|---|---|---|---|---|---|---|
| C324 | 4D | 2B | R309 | 1C | 4B | R381 | 5B | 2D |
| C325 | 4D | 2B | R310 | 2C | 3A | R382 | 4C | 3D |
| C326 | 5D | 2B | R313 | 2D | 4B | R383 | 4C | 3D |
| C376 | 5B | 2D | R316 | 2D | 4C | R384 | 4C | 2C |
| C384 | 4C | 3C | R317 | 2D | 4C | R385 | 4C | 3C |
| C386 | 4C | 3D | R318 | 2D | 4C | R386 | 4C | 3D |
| | | | R319 | 2D | 4C | R387 | 5C | 3D |
| CR319 | 2E | 3C | R324 | 3B | 2H | R391 | 4C | 3D |
| CR324 | 3B | 2H | R351 | 3C | 2F | R392 | 5C | 3D |
| CR386 | 4C | 3D | R352 | 3C | 2F | R393 | 5C | 4D |
| | | | R353 | 3D | 1F | R394 | 5C | 3D |
| J392 | 5E | 2D | R354 | 3C | 2F | R395 | 5C | 4D |
| | | | R356 | 4D | 2E | R396 | 5C | 4D |
| P303 | 4E | 1B | R357 | 4D | 2E | R397 | 5C | 4D |
| P304 | 1B | 2A | R358 | 4D | 1E | | | |
| P306 | 3A | 2H | R361 | 3A | 2H | S309 | 1C | 4A |
| P308 | 2A | 2J | R363 | 3B | 2H | S325 | 2B | 3F |
| P309 | 2E | 1B | R365 | 3A | 2H | S365 | 4B | 3H |
| P310 | 1B | 3A | R366 | 3B | 3H | S395 | 5D | 3E |
| P2006 | 1E | 1B | R367 | 3A | 2H | | | |
| | | | R368 | 4B | 2H | U364A | 3C | 2F |
| Q356 | 4D | 2E | R369 | 4B | 1F | U364B | 3B | 2F |
| Q357 | 4D | 2E | R372 | 4B | 2E | U364C | 3B | 2F |
| Q362 | 3B | 3H | R373 | 4B | 2E | U364D | 4C | 2F |
| Q366 | 3B | 3G | R374 | 4B | 2E | U366A | 4D | 2F |
| Q376 | 5B | 2D | R375 | 5B | 2E | U366B | 4D | 2F |
| Q382 | 4B | 2C | R376 | 5B | 2D | U366C | 3C | 2F |
| Q384 | 4C | 2D | R380 | 4B | 2D | | | |

*Partial A5 also shown on diagram 13.*

## CHASSIS MOUNTED PARTS

| CIRCUIT NUMBER | SCHEM LOCATION | BOARD LOCATION | CIRCUIT NUMBER | SCHEM LOCATION | BOARD LOCATION | CIRCUIT NUMBER | SCHEM LOCATION | BOARD LOCATION |
|---|---|---|---|---|---|---|---|---|
| DS308 | 2A | CHASSIS | J396 | 5E | CHASSIS | P314 | 1B | CHASSIS |

*Not Active
**Board Not Shown

http://manoman.sqhill.com

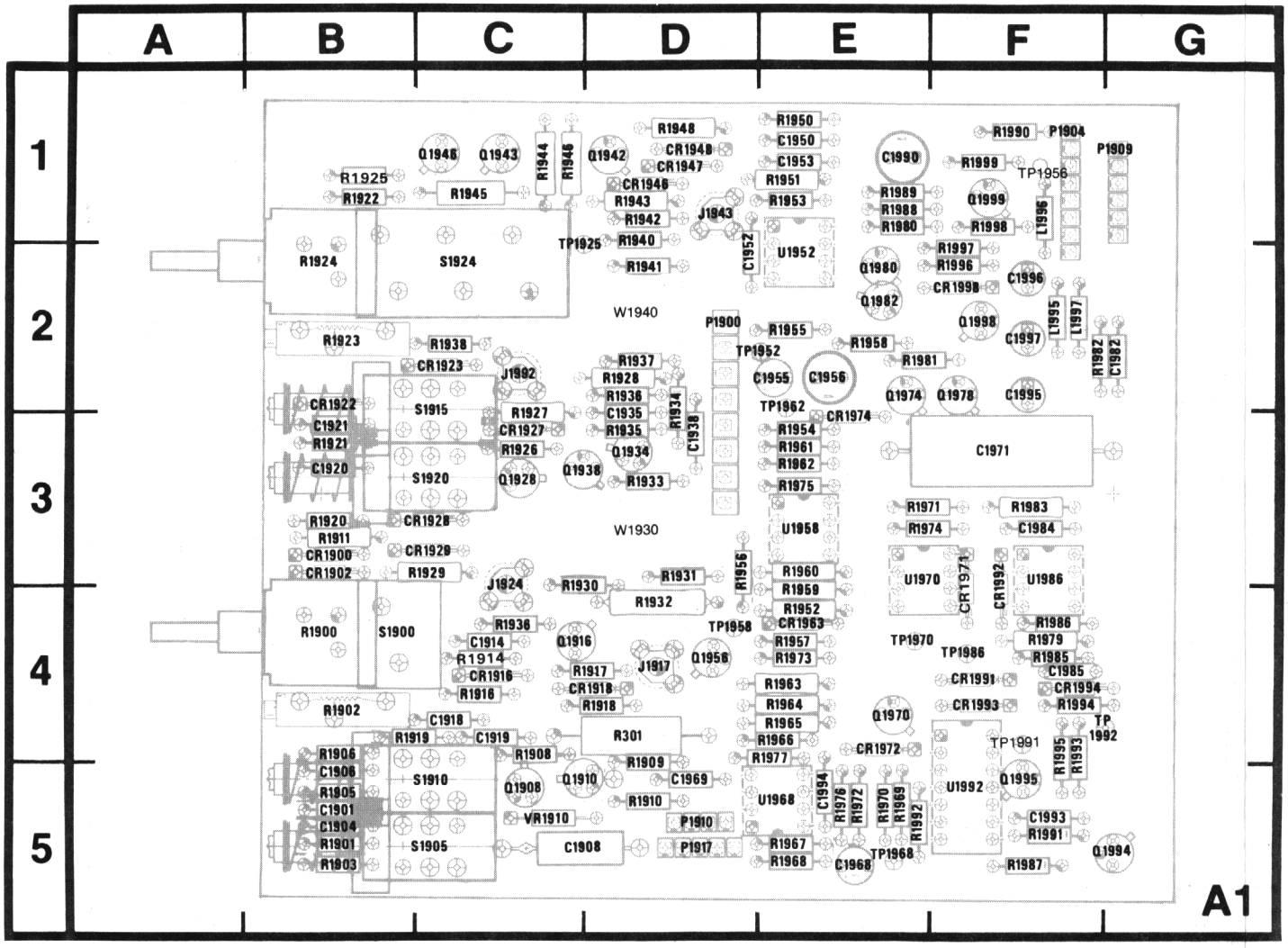


5039-803

Figure 8-3. A1—Front Panel Board assembly.

http://manoman.sqhill.com

## VOLTAGE CONDITIONS

Use a digital voltmeter with a 10 MΩ input impedance, such as the TEKTRONIX DM 501A Digital Multimeter installed in a TM 500- or TM 5000-series Power Module, or a TEKTRONIX 7D13A Digital Multimeter installed in a readout-equipped 7000-series oscilloscope.

The voltages shown were obtained with all R7103 front-panel variable controls, except INTENSITY and READOUT INTENSITY, set to midrange. INTENSITY and READOUT INTENSITY were set fully counterclockwise (off). Other R7103 controls were set as follows:

Front panel:

VERTICAL MODE ..... LEFT

TRIGGER SOURCE ..... VERT MODE

Rear panel:

CONTROL ILLUMINATION ..... HIGH

No plug-in units were installed.

http://manoman.sqhill.com

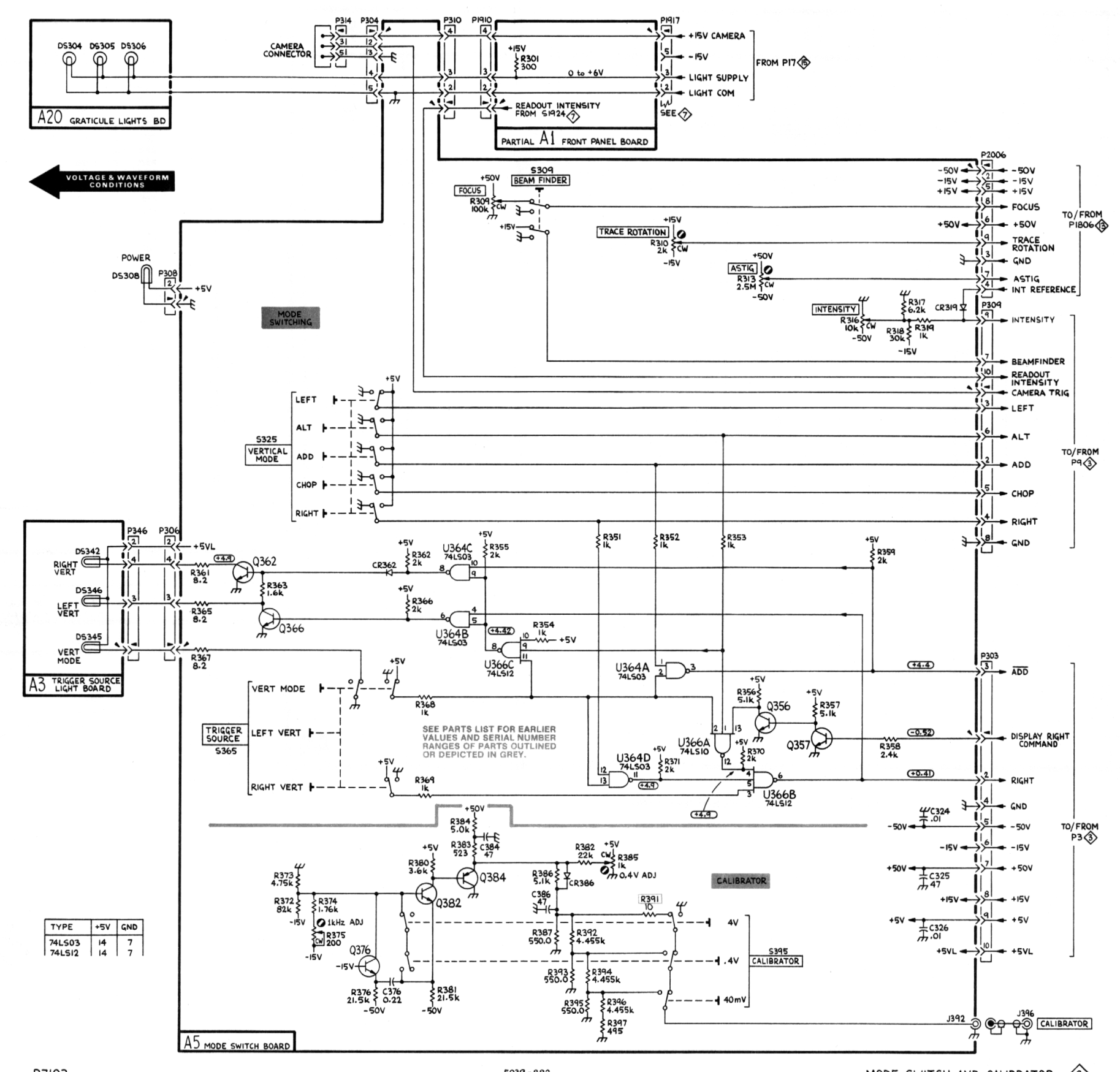


R7103

5039-882
REV JAN 1985

MODE SWITCH AND CALIBRATOR 2

http://manoman.sqhill.com

# MAIN INTERFACE DIAGRAM 3

## ASSEMBLY A6

| CIRCUIT NUMBER | SCHEM LOCATION | BOARD LOCATION |
|---|---|---|
| C5 | 3A | 3B |
| C6 | 3A | 4D |
| C7 | 3A | 4D |
| C8 | 3A | 4D |
| C9 | 3A | 3C |
| C11 | 3A | 4F |
| C12 | 3A | 4E |
| C13 | 3A | 5B |
| C15 | 1A | 6C |
| C19 | 1B | 5C |
| C85 | 5F | 6F |
| C87 | 2F | 6F |
| CR3 | 2A | 5A |
| CR32 | 1C | 1G |
| CR33 | 1C | 1F |
| CR34 | 1C | 1G |
| CR35 | 1C | 1F |
| CR36 | 1C | 1H |
| CR37 | 1C | 1G |
| CR38 | 1C | 1G |
| CR39 | 1C | 1F |
| CR42 | 1D | 1G |
| CR43 | 1D | 1F |
| CR44 | 1E | 1G |
| CR45 | 1E | 1F |
| CR46 | 1D | 1G |
| CR47 | 1D | 1F |
| CR48 | 1E | 1G |
| CR49 | 1E | 1F |
| CR52 | 3E | 5G |
| CR62 | 1F | 1G |
| CR63 | 1F | 1F |
| CR64 | 1F | 1G |
| CR65 | 1F | 1F |
| CR66 | 1F | 1G |
| CR67 | 1F | 1F |
| CR68 | 1F | 1G |
| CR69 | 1F | 1F |
| CR73 | 3E | 5H |
| CR82 | 2F | 3H |
| CR83 | 2F | 4G |
| CR86 | 5F | 6D |
| CR88 | 2F | 5H |
| J1 | 1C | 5C |
| J2 | 1D | 5E |
| J3 | 1E | 5G |
| J78 | 2G | 6B |
| J94 | 3F | 6G |
| P9 | 5C | 1A |
| P67 | 1A | 2H |
| P75 | 5E | 1H |
| P80 | 4G | 1E |
| P82 | 3A | 1D |
| P83 | 4A | 2E |
| P84 | 2G | 1B |
| P85 | 4A | 6A |
| P87 | 2G | 1H |
| P89 | 2A | 6A |
| Q18 | 1B | 5C |
| Q89 | 2F | 6E |
| Q90 | 2F | 6E |
| R3 | 2A | 5A |
| R14 | 1A | 6C |
| R15 | 1A | 6C |
| R16 | 1A | 6D |
| R17 | 1B | 6C |
| R18 | 1B | 5C |
| R19 | 1B | 6C |
| R22 | 4C | 5C |
| R26 | 4C | 4F |
| R32 | 1C | 2G |
| R33 | 1C | 2F |
| R34 | 1C | 2F |
| R35 | 1C | 2F |
| R42 | 1D | 2F |
| R43 | 1D | 2F |
| R44 | 1D | 2F |
| R45 | 1D | 2F |
| R52 | 4E | 5G |
| R53 | 4D | 5E |
| R55 | 4D | 4F |
| R56 | 4E | 4F |
| R62 | 1E | 2F |
| R63 | 1F | 2F |
| R64 | 1F | 2F |
| R65 | 1E | 2F |
| R73 | 2F | 4H |
| R76 | 4F | 6F |
| R83 | 2F | 3H |
| R85 | 5F | 6D |
| R86 | 5F | 6D |
| R87 | 2F | 6F |
| R88 | 2F | 5H |
| R89 | 2F | 6F |
| R90 | 2F | 6F |
| R91 | 4F | 6F |
| R93 | 4F | 6F |
| R94 | 2F | 5H |
| R58 | 3E | ** |
| R59 | 3E | ** |

*Partial A6 also shown on diagram 6.*

## CHASSIS MOUNTED PARTS

| CIRCUIT NUMBER | SCHEM LOCATION | BOARD LOCATION |
|---|---|---|
| J81 | 2G | CHASSIS |
| J83 | 3G | CHASSIS |

**Board Not Shown

http://manoman.sqhill.com

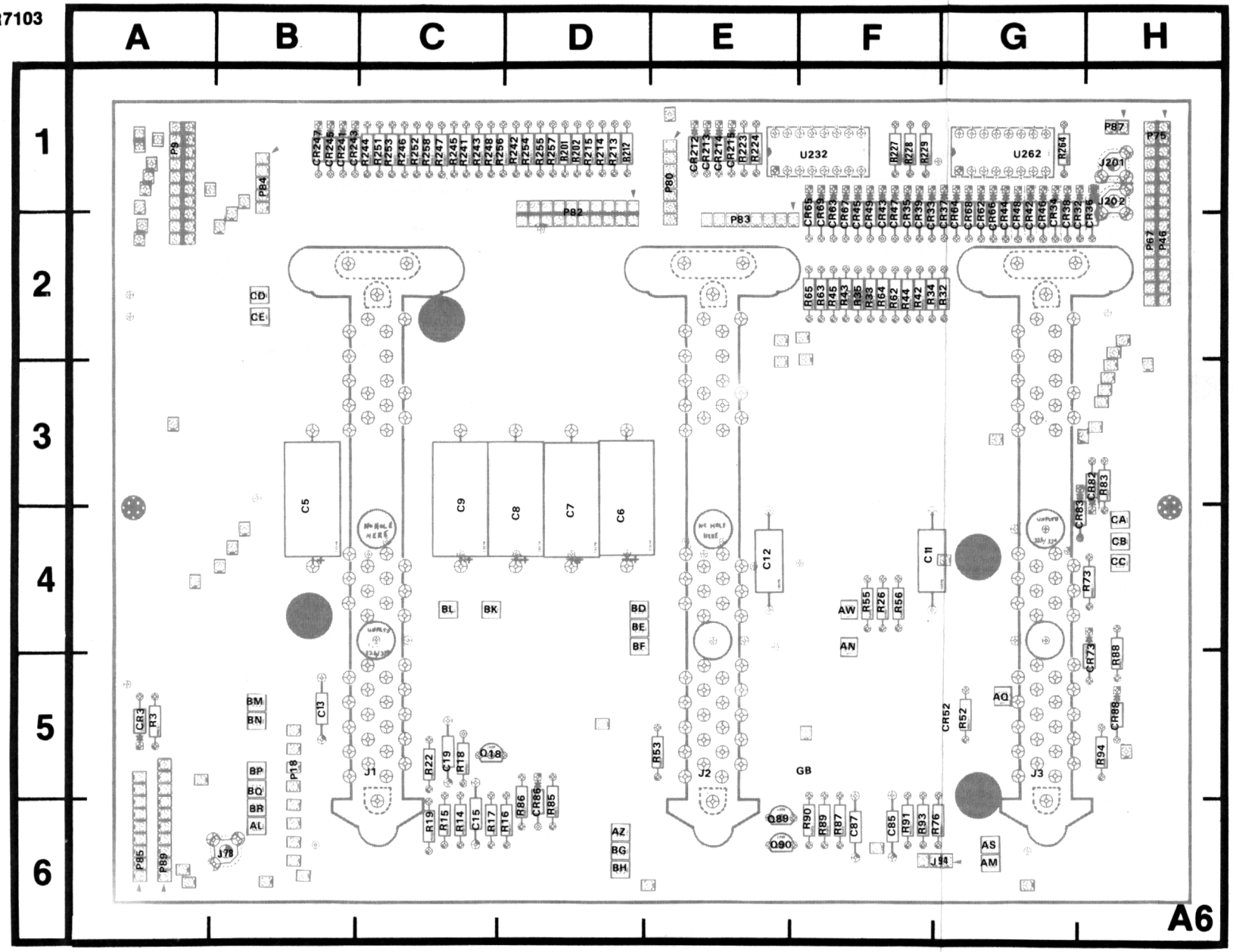


**Figure 8-5. A6—Interface Board assembly.**

http://manoman.sqhill.com

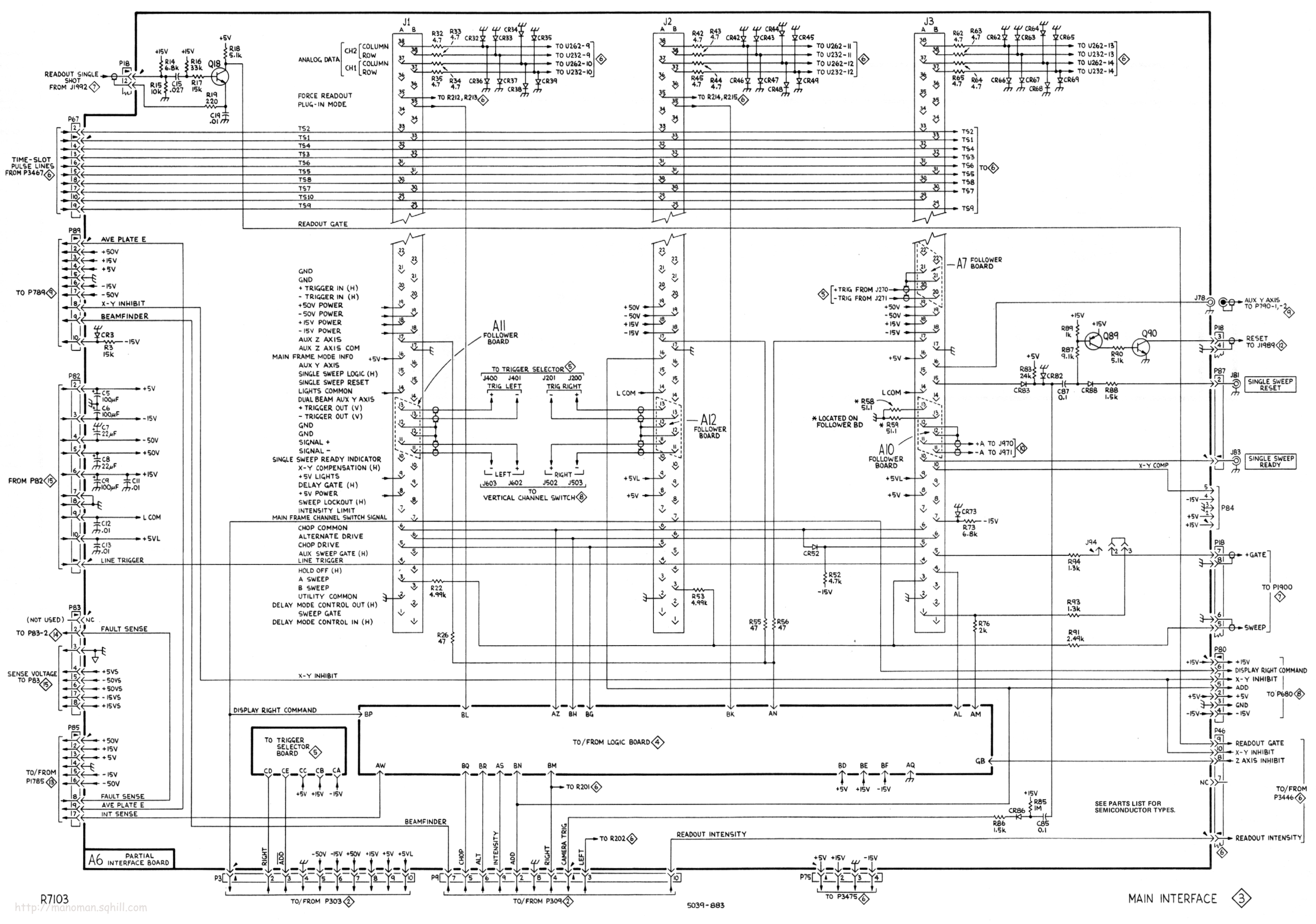


http://manoman.sqhill.com

# LOGIC DIAGRAM 4

## ASSEMBLY A13

| CIRCUIT NUMBER | SCHEM LOCATION | BOARD LOCATION |
|---|---|---|
| C303 | 2A | 2D |
| C304 | 2B | 2D |
| C314 | 3B | 2E |
| C315 | 3C | 1F |
| C316 | 3B | 1E |
| C320 | 2B | 2E |
| C341 | 1F | 3G |
| C342 | 1F | 3G |
| C343 | 1F | 2G |
| C351 | 2D | 2F |
| C367 | 2F | 3D |
| C368 | 2F | 3D |
| C369 | 2F | 3D |
| C394 | 3E | 3E |
| C395 | 2E | 3E |
| C397 | 3E | 3F |
| C408 | 3A | 2D |
| C409 | 3A | 2F |
| C429 | 4B | 2B |
| C436 | 3C | 2D |
| C439 | 3C | 2D |
| CR327 | 1D | 1H |
| CR328 | 1D | 1H |
| CR329 | 1D | 1F |
| CR332 | 1D | 1G |
| CR333 | 1D | 1G |
| CR359 | 2E | 3C |
| CR386 | 2D | 3F |
| CR417 | 3B | 2A |
| CR419 | 3B | 2A |
| CR426 | 4B | 2B |
| CR427 | 4B | 2B |
| J395 | 4A | 1C |
| J406 | 3D | 2B |
| L303 | 2A | 1E |
| L304 | 2B | 2D |
| L317 | 3B | 2E |
| L320 | 2B | 2E |
| L408 | 3A | 1E |
| L409 | 3A | 1E |
| L436 | 3C | 2D |
| Q336 | 1E | 2G |
| Q342 | 1F | 2G |
| Q352 | 2D | 2G |
| Q364 | 2E | 2D |
| Q368 | 2F | 2D |
| Q391 | 3E | 2F |
| Q395 | 3E | 2E |
| Q416 | 3B | 2A |
| Q452 | 4C | 2C |
| R303 | 2B | 2D |
| R304 | 2A | 1F |
| R305 | 2A | 1F |
| R306 | 2B | 1F |
| R307 | 2B | 1F |
| R312 | 3B | 2E |
| R313 | 3B | 2E |
| R314 | 3B | 2E |
| R315 | 3C | 2E |
| R316 | 3B | 2E |
| R327 | 1C | 1H |
| R328 | 1C | 2G |
| R329 | 1D | 1F |
| R332 | 1D | 2G |
| R333 | 1D | 2F |
| R336 | 1E | 2G |
| R337 | 1E | 2G |
| R338 | 1E | 2G |
| R339 | 1E | 2F |
| R341 | 1F | 2G |
| R342 | 1F | 3G |
| R343 | 1F | 3G |
| R351 | 1D | 2F |
| R352 | 1D | 3G |
| R353 | 2D | 2F |
| R358 | 2E | 3C |
| R359 | 2E | 3C |
| R362 | 2E | 3D |
| R363 | 2E | 3C |
| R364 | 2E | 3D |
| R365 | 2E | 3D |
| R367 | 2F | 3D |
| R368 | 2F | 3D |
| R369 | 2F | 3E |
| R383 | 2C | 3B |
| R384 | 2C | 3C |
| R386 | 2D | 3F |
| R387 | 2E | 3F |
| R389 | 2D | 3F |
| R390 | 3D | 3F |
| R391 | 2E | 3F |
| R392 | 3E | 3F |
| R394 | 3E | 3E |
| R395 | 2E | 3E |
| R396 | 3E | 3E |
| R397 | 3E | 3E |
| R413 | 3A | 2C |
| R414 | 3B | 3A |
| R415 | 3B | 3A |
| R416 | 3B | 3B |
| R419 | 3B | 2B |
| R423 | 4A | 3B |
| R424 | 4A | 1C |
| R425 | 4A | 1C |
| R428 | 4B | 2B |
| R429 | 4B | 1B |
| R437 | 3D | 2C |
| R441 | 3C | 1B |
| R451 | 4C | 2C |
| R452 | 4C | 2C |
| R456 | 4C | 1B |
| R457 | 4C | 1B |
| U320 | 2B | 2F |
| U356A | 2D | 3C |
| U356B | 2E | 3C |
| U383A | 2D | 3G |
| U383B | 2C | 3G |
| U440 | 4D | 2C |
| VR413 | 3B | 3A |

## CHASSIS MOUNTED PARTS

| CIRCUIT NUMBER | SCHEM LOCATION | BOARD LOCATION |
|---|---|---|
| J95 | 4A | CHASSIS |

http://manoman.sqhill.com

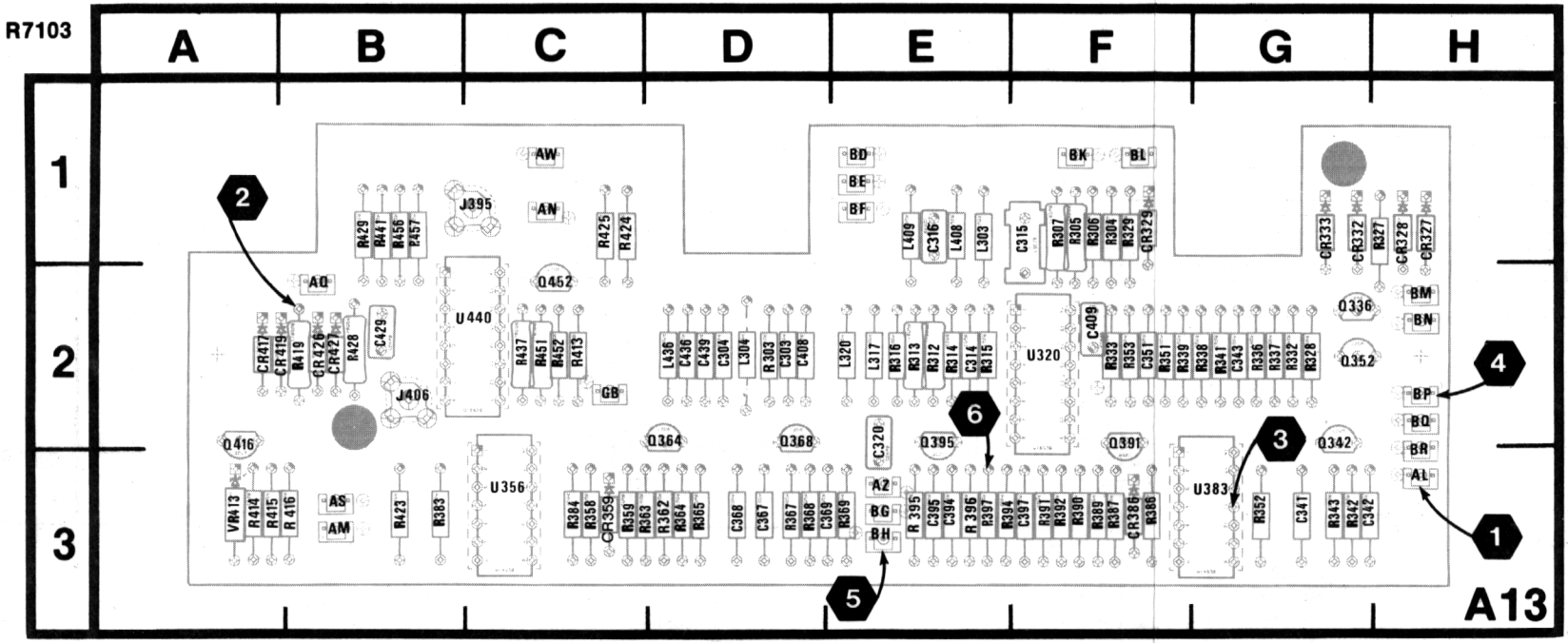


**Figure 8-6. A13—Logic Board assembly.**

http://manoman.sqhill.com

## VOLTAGE AND WAVEFORM CONDITIONS

**Voltage Conditions:** Use a digital voltmeter with 10 MΩ input impedance, such as the TEKTRONIX DM 501A Digital Multimeter installed in a TM 500- or TM 5000-series power module, or a TEKTRONIX 7D13A Digital Multimeter installed in a readout-equipped 7000-series oscilloscope.

Set the R7103 as follows:

| | |
|---|---|
| INTENSITY | Fully counterclockwise (off) |
| FOCUS | Fully counterclockwise |
| READOUT | Fully counterclockwise (off) |
| GRAT ILLUM | Fully counterclockwise (off) |
| VERTICAL MODE | LEFT |
| TRIGGER SOURCE | VERT MODE |

No plug-in units are to be installed when measuring voltages.

**Waveform Conditions:** Use a TEKTRONIX 7704A Oscilloscope with a 7A26 Dual Trace Amplifier and a 7B80 Time Base, or equivalent.

Install a 7A18A Dual Trace Amplifier in the R7103 LEFT VERT plug-in compartment and a 7B15 Delaying Time Base in the R7103 HORIZ plug-in compartment.

Set the R7103 and its plug-in units as follows:

| | |
|---|---|
| INTENSITY, FOCUS | Set to produce clear, well-defined display of low-to-medium brightness. |
| CALIBRATOR | |
| 4 V | Pressed in. |
| READOUT | For clear, well-defined readout display. |
| VERTICAL MODE | LEFT |
| TRIGGER SOURCE | VERT MODE |
| Left Vertical Plug-In Unit (7A18A) | |
| Volts/Div | 1 |
| Horizontal Plug-In Unit (7B15) | |
| Time/Div | 1 ms |
| Trigger Mode | Auto |

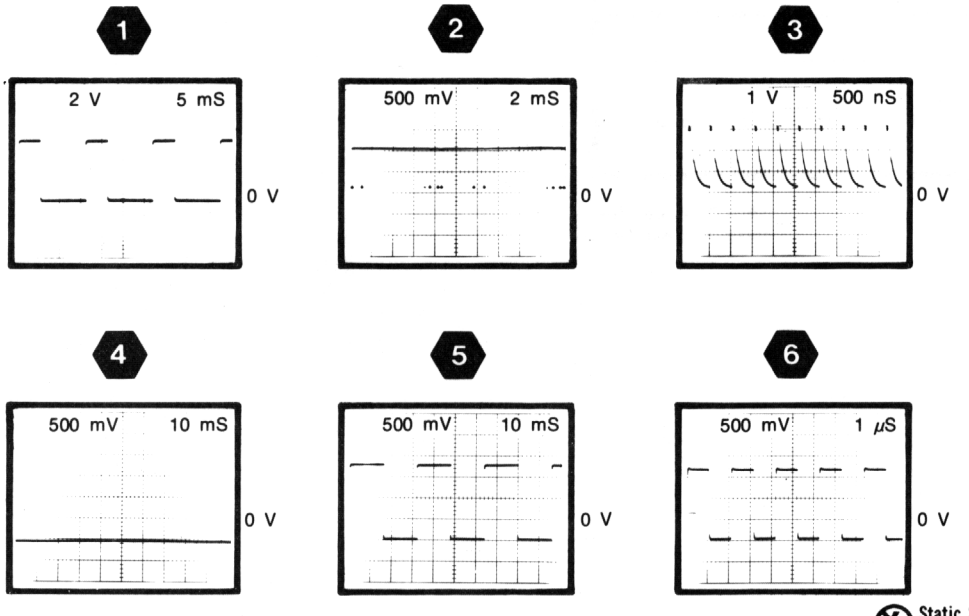


**Static Sensitive Devices**
*See Maintenance Section*

**COMPONENT NUMBER EXAMPLE**

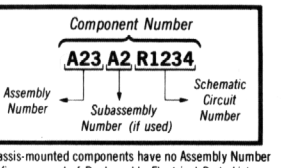


Chassis-mounted components have no Assembly Number prefix—see end of Replaceable Electrical Parts List.

http://manoman.sqhill.com

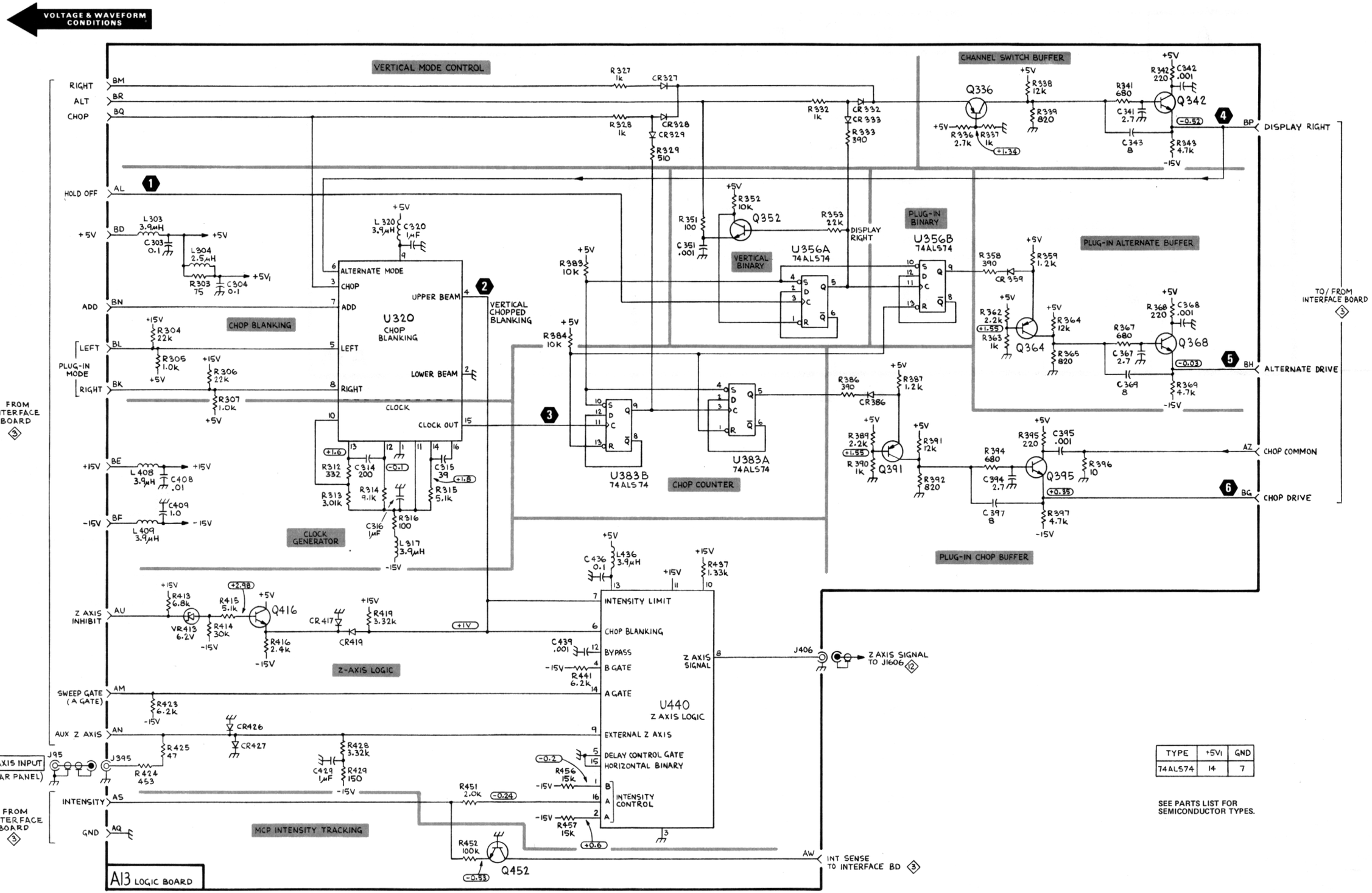


| TYPE | +5V1 | GND |
|---|---|---|
| 74ALS74 | 14 | 7 |

SEE PARTS LIST FOR SEMICONDUCTOR TYPES.

R7103

5039-884

LOGIC 4

http://manoman.sqhill.com

# TRIGGER SELECTOR DIAGRAM 5

## ASSEMBLY A14

| CIRCUIT NUMBER | SCHEM LOCATION | BOARD LOCATION |
|---|---|---|
| C240 | 1D | 1G |
| C249 | 2D | 3G |
| C250 | 3D | 3F |
| C254 | C2 | 2F |
| C464* | 3E | 1E |
| C483 | 3D | 2C |
| C486 | 4C | 1B |
| C487 | 4C | 3A |
| C488 | 4C | 3C |
| C490 | 4E | 2B |
| C493 | 4D | 2C |
| J200 | 2A | 2G |
| J201 | 3A | 2G |
| J270 | 1F | 2D |
| J271 | 3F | 2D |
| J400 | 1A | 2J |
| J401 | 1A | 2J |
| J496 | 4F | 1A |
| L236 | 2D | 1G |
| L238 | 2D | 1F |
| L246 | 2D | 3G |
| L248 | 2D | 2F |
| L480 | 4D | 2A |
| L486 | 4D | 3D |
| Q254 | 2C | 1F |
| R201 | 2A | 1H |
| R202 | 2A | 1H |
| R205 | 2A | 1H |
| R208 | 2B | 3G |
| R209 | 2B | 3G |
| R211 | 1A | 2H |
| R212 | 1A | 2H |
| R213 | 1A | 2H |
| R214 | 1A | 2H |
| R215 | 2A | 2G |
| R216 | 2A | 2G |
| R217 | 3A | 2G |
| R218 | 3A | 2G |
| R219 | 2B | 1G |
| R220 | 2B | 1H |
| R225 | 2B | 3G |
| R226 | 2B | 3G |
| R232 | 1C | 3H |
| R233 | 1B | 3H |
| R234 | 1B | 2H |
| R235 | 1C | 3H |
| R236 | 2C | 1F |
| R237 | 2D | 1F |
| R238 | 2D | 1F |
| R239 | 2C | 2E |
| R240 | 1D | 1F |
| R241 | 2C | 2E |
| R242 | 3C | 1G |
| R243 | 3B | 1G |
| R244 | 3B | 1F |
| R245 | 3C | 2G |
| R246 | 2C | 2F |
| R247 | 2D | 2F |
| R248 | 2D | 3F |
| R251 | 2D | 2E |
| R252 | 2D | 2E |
| R254 | 2C | 1F |
| R255 | 2D | 2F |
| R256 | 2D | 2E |
| R263 | 2D | 3D |
| R273 | 1E | 1D |
| R274 | 1E | 1D |
| R277 | 2E | 2D |
| R278 | 2F | 1C |
| R279 | 2F | 1D |
| R280 | 2E | 2D |
| R464 | 3E | 1E |
| R465 | 3E | 1E |
| R480 | 4D | 2A |
| R481 | 4E | 2B |
| R482 | 4E | 2C |
| R483 | 3D | 2C |
| R484 | 3E | 2C |
| R485 | 4E | 2B |
| R486 | 4D | 3D |
| R490 | 4E | 2B |
| R491 | 4E | 2B |
| R492 | 4E | 2B |
| R493 | 4D | 2C |
| R494 | 4E | 2B |
| R495 | 4E | 1C |
| R496 | 4D | 3D |
| R497 | 4F | 1B |
| R498 | 4F | 2B |
| R499 | 4F | 1B |
| U202A | 2B | 1H |
| U202B | 2A | 1H |
| U232 | 2C | 2G |
| U252A | 2C | 2E |
| U252B | 3E | 2E |
| U274 | 2E | 2D |
| U492 | 4E | 1C |
| VR237 | 1D | 1G |
| VR247 | 2D | 3G |

## CHASSIS MOUNTED PARTS

| CIRCUIT NUMBER | SCHEM LOCATION | BOARD LOCATION |
|---|---|---|
| J497 | 4F | CHASSIS |

***See Parts List for serial number ranges.**

http://manoman.sqhill.com

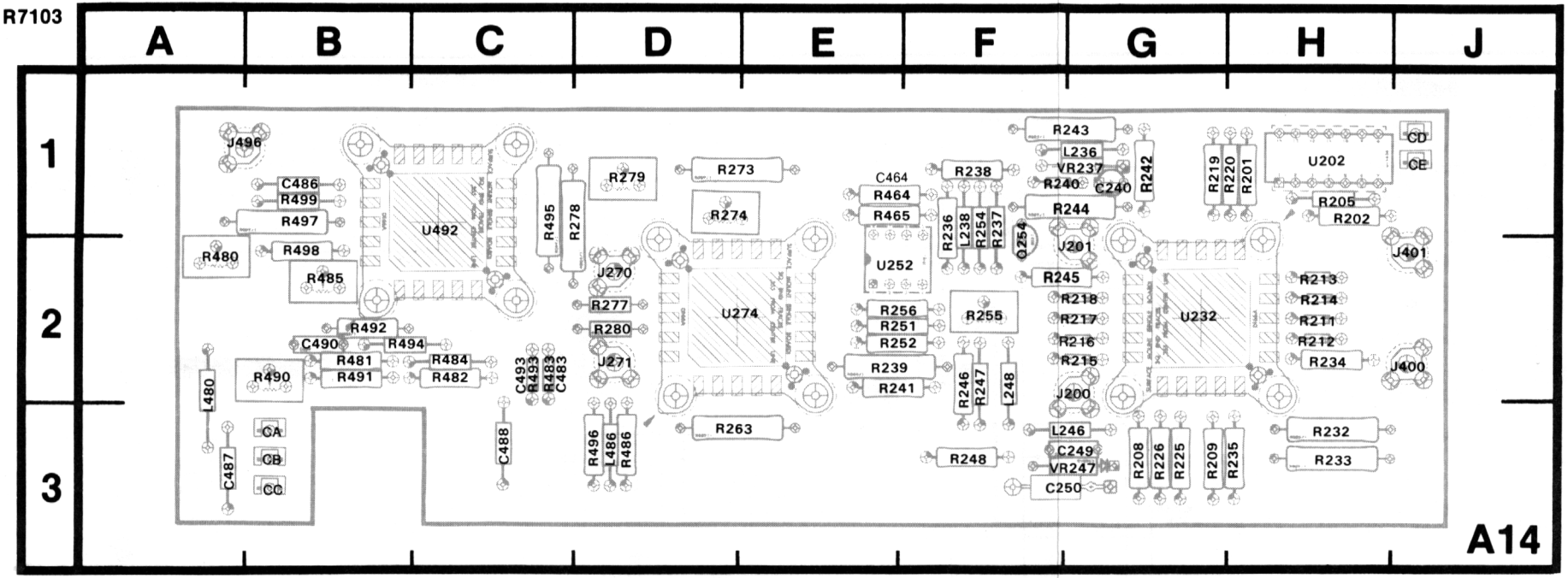


5039-807B

**Figure 8-7. A14—Trigger Selector Board assembly.**

http://manoman.sqhill.com

## VOLTAGE CONDITIONS

Use a digital voltmeter with a 10 MΩ input impedance, such as the TEKTRONIX DM 501A Digital Multimeter installed in a TM 500- or TM 5000-series Power Module, or a TEKTRONIX 7D13A Digital Multimeter installed in a readout-equipped 7000-series oscilloscope.

The voltages shown were obtained with all R7103 front-panel variable controls, except INTENSITY and READOUT INTENSITY, set to midrange. INTENSITY and READOUT INTENSITY were set fully counterclockwise (off). Other R7103 front-panel controls were set as follows:

VERTICAL MODE .....LEFT
TRIGGER SOURCE .....VERT MODE

No plug-in units were installed.

http://manoman.sqhill.com

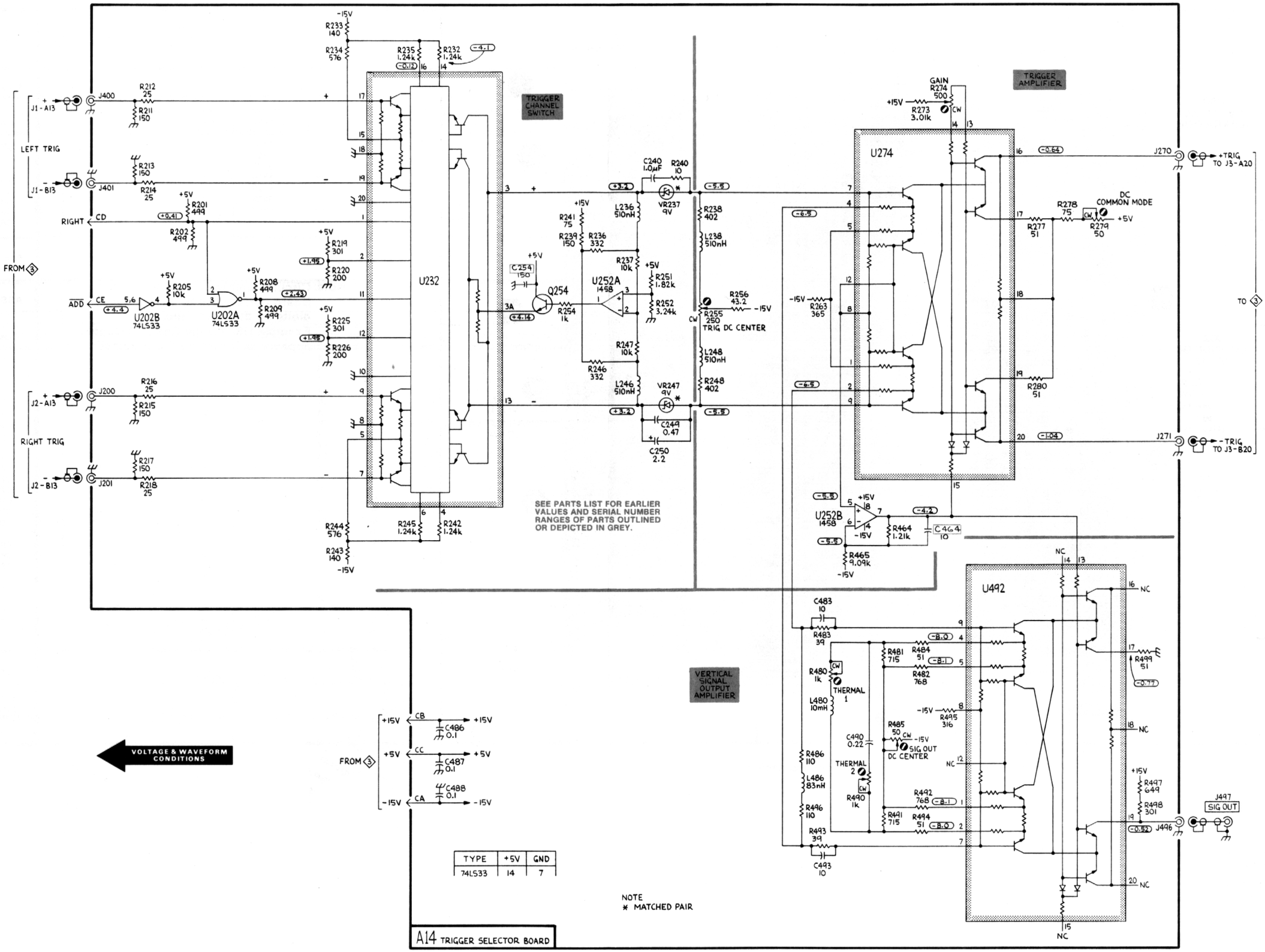




http://manoman.sqhill.com

# READOUT SYSTEM DIAGRAM 6

**Note: Circuit Numbers on the Readout Board correspond to the last two digits on the schematic. Example U80 on the Readout Board appears as U3480 on the schematic.**

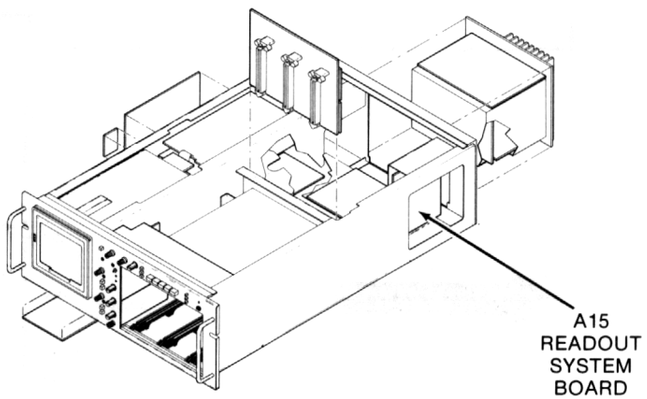


## ASSEMBLY A6

| CIRCUIT NUMBER | SCHEM LOCATION | BOARD LOCATION | CIRCUIT NUMBER | SCHEM LOCATION | BOARD LOCATION | CIRCUIT NUMBER | SCHEM LOCATION | BOARD LOCATION | CIRCUIT NUMBER | SCHEM LOCATION | BOARD LOCATION | CIRCUIT NUMBER | SCHEM LOCATION | BOARD LOCATION | CIRCUIT NUMBER | SCHEM LOCATION | BOARD LOCATION |
|---|---|---|---|---|---|---|---|---|---|---|---|---|---|---|---|---|---|
| CR00212 | 4A | 1E | J201 | 4C | 1H | R215 | 4B | 1D | R243 | 4B | 1C | R253 | 5C | 1C | U232 | 3C | 1F |
| CR213 | 4A | 1E | J202 | 3C | 1H | R223 | 3B | 1E | R244 | 4B | 1C | R254 | 5B | 1D | U262 | 4B | 1G |
| CR214 | 4A | 1E | | | | R224 | 3B | 1E | R245 | 4B | 1C | R255 | 5C | 1D | | | |
| CR215 | 4B | 1E | R201 | 4A | 1D | R227 | 3B | 1F | R246 | 5B | 1C | R256 | 5B | 1C | | | |
| CR241 | 5A | 1B | R202 | 4B | 1D | R228 | 3B | 1F | R247 | 4B | 1C | R257 | 5C | 1D | | | |
| CR243 | 5B | 1B | R212 | 4A | 1D | R229 | 3B | 1F | R248 | 5B | 1C | R258 | 5B | 1C | | | |
| CR245 | 5B | 1B | R213 | 4A | 1D | R241 | 4A | 1C | R251 | 5C | 1C | R264 | 4C | 1G | | | |
| CR247 | 5B | 1B | R214 | 4A | 1D | R242 | 5A | 1D | R252 | 5B | 1C | | | | | | |

*Partial A6 also shown on diagram 3.*

## ASSEMBLY A15

| CIRCUIT NUMBER | SCHEM LOCATION | BOARD LOCATION | CIRCUIT NUMBER | SCHEM LOCATION | BOARD LOCATION | CIRCUIT NUMBER | SCHEM LOCATION | BOARD LOCATION | CIRCUIT NUMBER | SCHEM LOCATION | BOARD LOCATION | CIRCUIT NUMBER | SCHEM LOCATION | BOARD LOCATION | CIRCUIT NUMBER | SCHEM LOCATION | BOARD LOCATION |
|---|---|---|---|---|---|---|---|---|---|---|---|---|---|---|---|---|---|
| C1 | 5D | 6E | CR45 | 2E | 5C | R1 | 5D | 7E | R35 | 2B | 6B | R81 | 2F | 4D | U45 | 2E | 7D |
| C7 | 4D | 3E | CR47 | 2D | 6D | R2 | 5D | 7E | R36 | 1C | 5E | R82 | 2G | 4C | U47A | 2D | 6D |
| C18 | 4E | 3E | | | | R3 | 5D | 7E | R37 | 1B | 6E | R83 | 3F | 5C | U47B | 2D | 6D |
| C20 | 3D | 3D | J1 | 4D | 2E | R4 | 5D | 7E | R38 | 2B | 6C | R84 | 3G | 5B | U47C | 2E | 6D |
| C29 | 3D | 4E | J2 | 3D | 2D | R5 | 5D | 7E | R39 | 2B | 6B | R85 | 3G | 5B | U47D | 2E | 6D |
| C34 | 1B | 6C | J3 | 1B | 7A | R6 | 4D | 3C | R40 | 1B | 7B | R86 | 2G | 4C | U49A | 1A | 5D |
| C38 | 2B | 7C | J4 | 3H | 4A | R7 | 4E | 2E | R41 | 1C | 6B | R87 | 3G | 3B | U49B | 1A | 5D |
| C43 | 1D | 5B | J5 | 2H | 3A | R8 | 4D | 2B | R42 | 1C | 7B | R88 | 3G | 3B | U49C | 1A | 5D |
| C45 | 2C | 5D | | | | R9 | 4E | 2E | R45 | 2E | 7D | R89 | 3G | 4C | U49D | 1A | 5D |
| C49 | 1A | 5E | L82 | 3G | 4C | R10 | 4D | 2C | R47 | 2C | 6C | R90 | 2G | 3A | U50 | 3E | 5C |
| C70 | 5F | 7F | | | | R11 | 4D | 2C | R49 | 1A | 5C | R91 | 2G | 3B | U61 | 1D | 3F |
| C71 | 5F | 7F | P67 | 1H | 7D | R12 | 4D | 2C | R50 | 3F | 6B | R92 | 2G | 3B | U63 | 1E | 5F |
| C72 | 5F | 7F | P75 | 5F | 7F | R14 | 4E | 3C | R51 | 3F | 5B | R93 | 2G | 3B | U65 | 1E | 4F |
| C75 | 3F | 6E | | | | R16 | 4E | 2C | R52 | 3F | 6B | R94 | 2G | 3B | U67 | 1F | 4F |
| C85 | 3F | 5C | Q6 | 4D | 3C | R18 | 4E | 2E | R66 | 1G | 4D | R95 | 2G | 4E | U69 | 1F | 5F |
| C95 | 2G | 4E | Q11 | 4E | 3C | R19 | 5E | 3C | R68 | 1G | 4D | R97 | 3G | 4B | U70 | 3F | 6F |
| | | | Q14 | 4E | 3C | R20 | 3D | 2D | R70 | 4F | 6E | R98 | 3G | 4B | U80 | 3G | 5C |
| CR16 | 4E | 2E | Q16 | 4E | 2D | R22 | 3D | 3D | R72 | 4F | 5E | R99 | 3G | 4B | | | |
| CR31 | 2A | 6B | Q19 | 5E | 3C | R23 | 3D | 3D | R73 | 4F | 6E | | | | VR70 | 4F | 6E |
| CR32 | 2B | 6C | Q27 | 3D | 3D | R25 | 3D | 3D | R74 | 4F | 5G | TP45 | 2E | 7D | VR71 | 4F | 6E |
| CR33 | 1B | 6D | Q42 | 1D | 7B | R27 | 2D | 5E | R75 | 4F | 6E | TP50 | 3F | 4B | VR72 | 4F | 7E |
| CR38 | 2B | 6B | Q45 | 2E | 7D | R30 | 2A | 6B | R76 | 4F | 6G | | | | | | |
| CR39 | 2B | 6B | Q86 | 2G | 4B | R31 | 2A | 6B | R77 | 2F | 4E | U1 | 5D | 7F | | | |
| CR41 | 1C | 7B | Q89 | 3G | 4B | R32 | 2B | 7C | R78 | 2F | 4E | U18 | 4E | 3F | | | |
| CR42 | 1D | 7B | Q93 | 2G | 3B | R33 | 1B | 6D | R79 | 2F | 4E | U29 | 3D | 3E | | | |
| CR43 | 1D | 6C | Q99 | 3G | 4B | R34 | 1B | 6C | R80 | 2G | 3E | U33 | 1B | 6C | | | |

## CHASSIS MOUNTED PARTS

| CIRCUIT NUMBER | SCHEM LOCATION | BOARD LOCATION | CIRCUIT NUMBER | SCHEM LOCATION | BOARD LOCATION |
|---|---|---|---|---|---|
| J30 | 4G | CHASSIS | J33 | 4G | CHASSIS |

http://manoman.sqhill.com

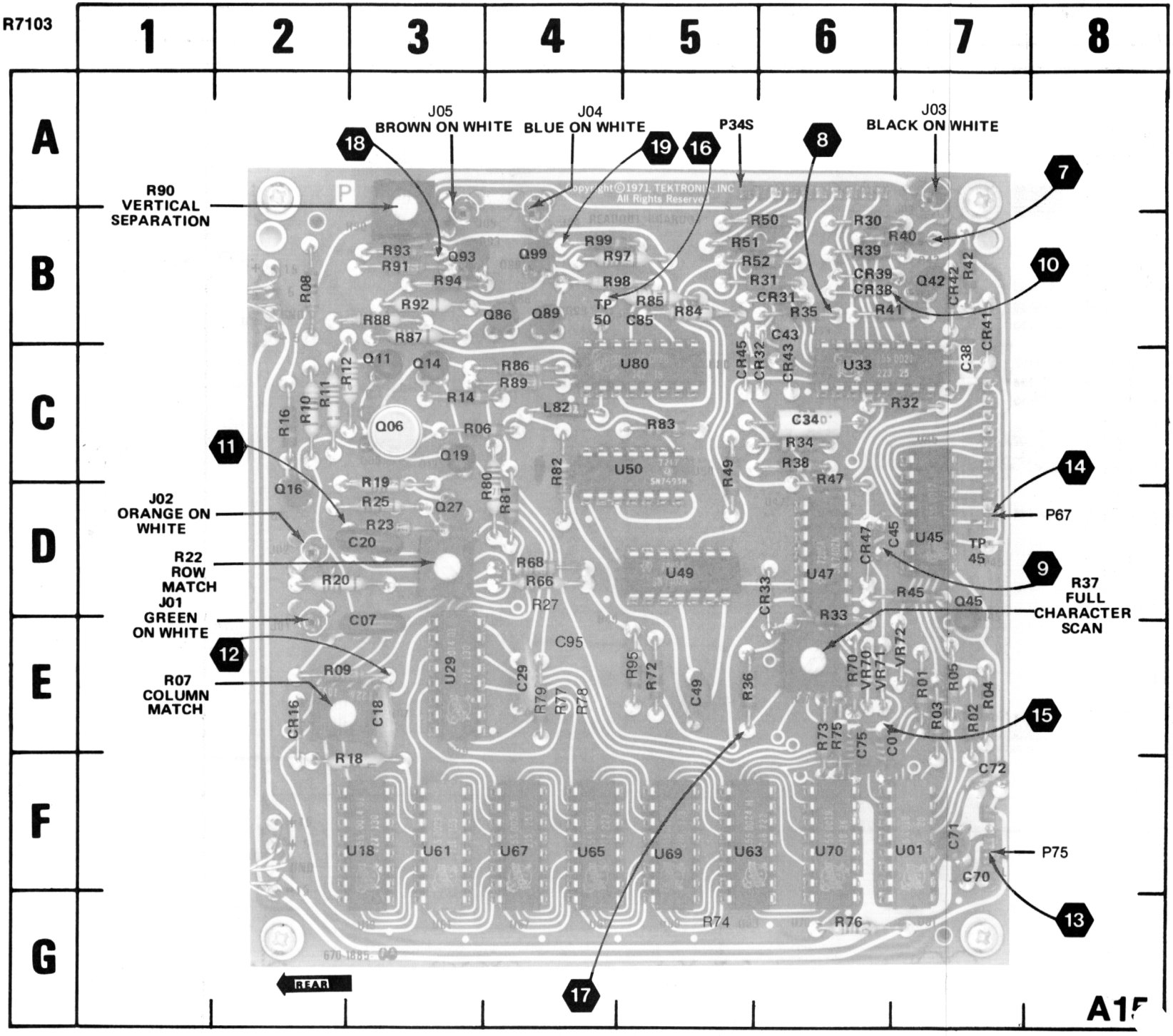


Figure 8-8. A15—Readout System Board assembly.

http://manoman.sqhill.com

## VOLTAGE AND WAVEFORM CONDITIONS

**Voltage Conditions:** Use a digital voltmeter with 10 MΩ input impedance, such as the TEKTRONIX DM 501A Digital Multimeter installed in a TM 500- or TM 5000-series power module, or a TEKTRONIX 7D13A Digital Multimeter installed in a readout-equipped 7000-series oscilloscope.

The voltages shown on the diagram were obtained with the following plug-in units installed in the R7103 and set as follows:

R7103

| | |
|---|---|
| INTENSITY | Fully counter-clockwise (off) |
| FOCUS | Midrange |
| READOUT | Midrange |
| GRAT ILLUM | Midrange |
| VERT MODE | LEFT |
| TRIGGER SOURCE | VERT MODE |
| READOUT | PULSED |
| PULSED +GATE -EXT | +GATE |
| PRESET | Set for a readout of moderate brightness |

7A26 (installed in R7103 LEFT VERT)

| | |
|---|---|
| Display Mode | Ch 1 |
| Volts/Div | 1 |

7B10 (installed in R7103 HORIZ)

| | |
|---|---|
| Triggering | |
| Mode | Auto |
| Coupling | AC |
| Source | Int |
| Time/Div | 2 ms |

**Waveform Conditions:** The waveforms shown below were taken with the same plug-in units installed and the same settings as for the Voltage Conditions.

The test oscilloscope (TEKTRONIX 7904, 7B15 Time Base, and 7A13 Differential Comparator with P6053 10X Probe) was externally triggered via a 1X probe connected to TP 3450 on the R7103 A15 Readout System.

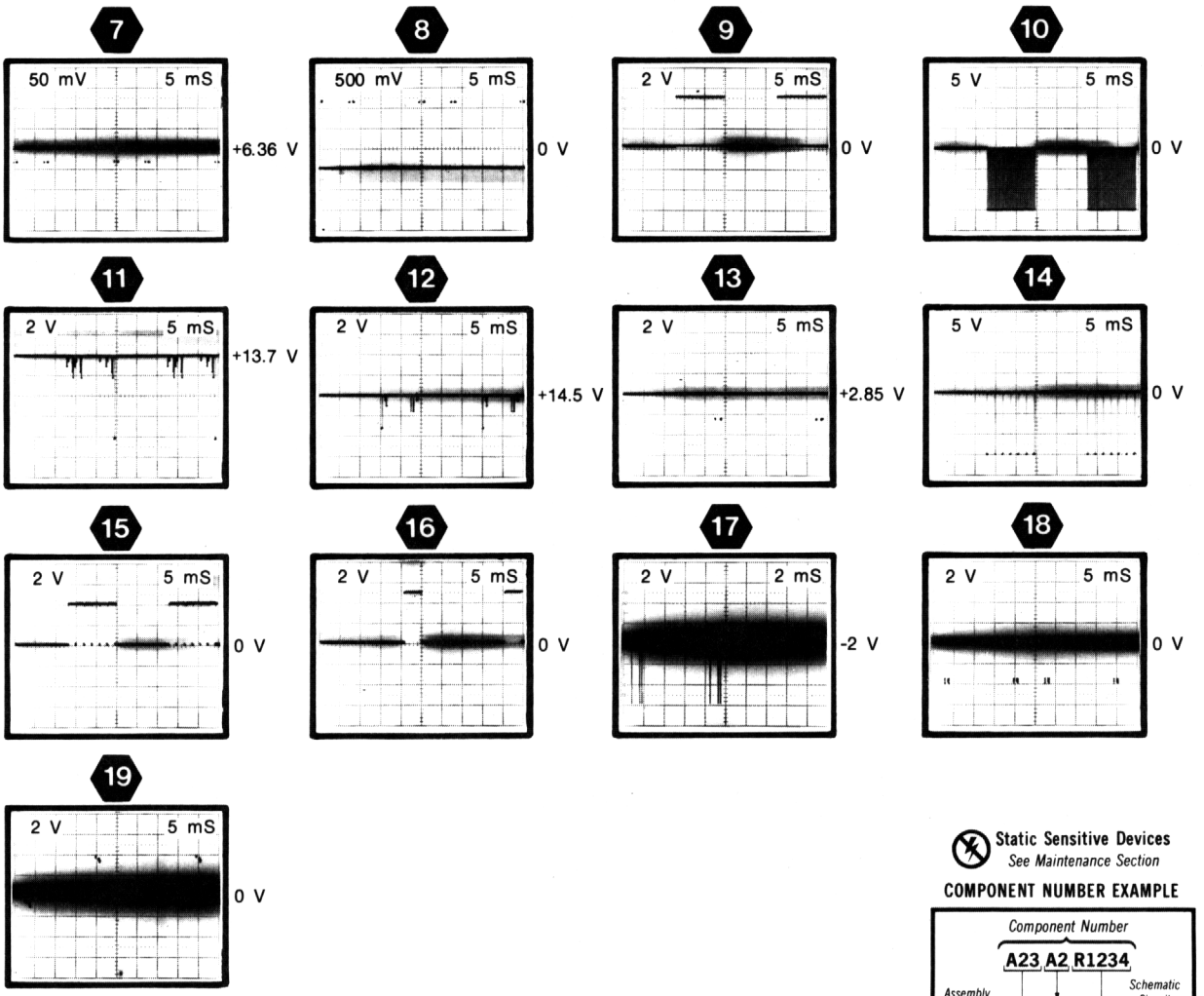


Static Sensitive Devices
*See Maintenance Section*

**COMPONENT NUMBER EXAMPLE**




Chassis-mounted components have no Assembly Number prefix—see end of Replaceable Electrical Parts List.

http://manoman.sqhill.com

READOUT GATE FROM Q18

SINGLE SHOT LOCKOUT

U3449C 7402N

U3449D 7402N

U3449A 7402N

U3449B 7402N

U3433 TIMER

CHARACTER SCAN

Z AXIS INHIBIT TO LOGIC BOARD PIN 6B

Z READOUT TO J1632

X-Y INHIBIT TO P80-7 P89-8

PART A4 INTERFACE BOARD

TRIGGER

TIMER

READOUT INTENSITY FROM P9-10

END OF FRAME PULSE

Q3442

STROBE TO U3401-15

U3461 NUMERALS

U3463 SYMBOLS

U3465 PREFIXES

U3467 LETTERS

U3469 LETTERS

CHARACTER GENERATOR

X DEFLECTION

Y DEFLECTION

READY

TIMESLOT PULSES TO P67

U3445 TIMESLOT COUNTER

TIMESLOT PULSES

U3447A 7402N

U3447B 7402N

U3447C 7402N

U3447D 7402N

WORD TRIGGER

JUMP COMMAND

VERTICAL SEPARATION

Y READOUT TO P790-3

U3480 FORMAT GEN

U3486

U3493

U3405

VOLTAGE & WAVEFORM CONDITIONS

ROW ANALOG DATA FROM

U232 ROW DATA SWITCH

TS1 FROM B33-J3

ROW MATCH

U3429 ROW DECODER

ROW DIGITAL DATA

DISPLAY SKIP

END OF WORD

Q3427

U3450 CHANNEL COUNTER 7493N

TP3450

DECIMAL

SPACE INSTRUCTION

U3470 DECIMAL POINT LOGIC & CHARAC POSITION COUNTER

Q3489

Q3499

X READOUT TO P790-5

FORMAT GENERATOR

LEFT FROM P9-3

RIGHT FROM P9-4

FORCE READOUT FROM

U262 COLUMN DATA SWITCH

COLUMN ANALOG DATA FROM

COLUMN & ROW DATA SWITCHES

DISPLAY SKIP GENERATOR

Q3406

Q3411

Q3414

Q3416

U3418 COLUMN DECODER

COLUMN DIGITAL DATA

COLUMN MATCH

Q3419

U3401 ZEROS LOGIC & MEMORY

STROBE FROM CR3442

TIMESLOT PULSE LINES FROM

PARTIAL A6 INTERFACE BOARD

SEE PARTS LIST FOR EARLIER VALUES AND SERIAL NUMBER RANGES OF PARTS OUTLINED OR DEPICTED IN GREY.

NOTE:

CIRCUIT NUMBERS ON THE READOUT BOARD CORRESPOND TO THE LAST TWO DIGITS OF NUMBERS ON THIS SCHEMATIC; EXAMPLE, U3480 ON THIS SCHEMATIC APPEARS AS U80 ON THE READOUT BOARD.

| TYPE | +5V | GND |
|---|---|---|
| 7402N | 14 | 7 |

NOTE: * +15V TIED TO J201 +15V

** +15V TIED TO J202 +15V

A15 READOUT BOARD

PROBE POWER

FROM P75

R7103

5039-886

READOUT SYSTEM 6

http://manoman.sqhill.com

# SIGNALS OUT DIAGRAM 7

## ASSEMBLY A1

| CIRCUIT NUMBER | SCHEM LOCATION | BOARD LOCATION |
|---|---|---|
| C1901 | 3A | 5B |
| C1904 | 3A | 5B |
| C1906 | 2B | 5B |
| C1908 | 2A | 5C |
| C1914 | 3B | 4C |
| C1918 | 3B | 4C |
| C1919 | 3B | 4C |
| C1920 | 3C | 3B |
| C1921 | 3C | 3B |
| C1935 | 3D | 2D |
| C1938 | 3D | 3D |
| CR1900 | 2A | 3B |
| CR1902 | 2A | 3B |
| CR1916 | 3B | 4C |
| CR1918 | 3B | 4D |
| CR1922 | 2C | 2B |
| CR1923 | 2C | 2C |
| CR1927 | 2D | 3C |
| CR1928 | 2D | 3C |
| CR1929 | 1D | 3C |
| CR1946 | 3D | 1D |
| CR1947 | 2E | 1D |
| CR1948 | 2E | 1D |
| J1917 | 4B | 4D |
| J1924 | 1D | 3C |
| J1943 | 1E | 1D |
| J1992 | 1C | 2C |
| P1900 | 4D | 2D |
| Q1908 | 2A | 5C |
| Q1910 | 2A | 5C |
| Q1916 | 3B | 5C |
| Q1928 | 2D | 3C |
| Q1934 | 3D | 3D |
| Q1938 | 3D | 3C |
| Q1942 | 3D | 1D |
| Q1943 | 3E | 1C |
| Q1946 | 3E | 1C |
| R1900 | 3A | 4B |
| R1901 | 3A | 5B |
| R1902 | 3A | 4B |
| R1903 | 3A | 5B |
| R1905 | 2A | 5B |
| R1906 | 2B | 4B |
| R1908 | 2A | 4C |
| R1909 | 2A | 5D |
| R1910 | 2A | 5D |
| R1911 | 3D | 3B |
| R1914 | 3D | 4C |
| R1915 | 3B | 4C |
| R1916 | 3B | 4C |
| R1917 | 3B | 4D |
| R1918 | 3B | 4D |
| R1919 | 3B | 4B |
| R1920 | 3C | 3B |
| R1921 | 3C | 3B |
| R1922 | 3C | 1B |
| R1923 | 3C | 2B |
| R1924 | 3C | 2B |
| R1925 | 3C | 1B |
| R1926 | 2D | 3C |
| R1927 | 2D | 3C |
| R1928 | 2D | 2D |
| R1929 | 1D | 3C |
| R1930 | 3D | 3C |
| R1932 | 3D | 4D |
| R1933 | 3D | 3D |
| R1934 | 3D | 3D |
| R1935 | 3D | 3D |
| R1936 | 3D | 2D |
| R1937 | 2D | 2D |
| R1938 | 2D | 2C |
| R1940 | 3E | 2C |
| R1942 | 3E | 1D |
| R1943 | 3D | 1D |
| R1944 | 3E | 1C |
| R1945 | 3E | 1C |
| R1946 | 3D | 1C |
| R1948 | 2E | 1D |
| S1900 | 1A | 4B |
| S1905 | 3A | 5C |
| S1910 | 2B | 5C |
| S1915 | 2C | 3C |
| S1920 | 3C | 3C |
| S1924 | 1C | 2C |
| S1924 | 2C | 2C |
| TP1925 | 2C | 2C |
| VR1910 | 2A | 5C |
| W1930 | 3D | 3D |
| W1940 | 3E | 2D |

*Partial A1 also shown on diagrams 2 and 12.*

## CHASSIS MOUNTED PARTS

| CIRCUIT NUMBER | SCHEM LOCATION | BOARD LOCATION |
|---|---|---|
| J1916 | 4B | CHASSIS |
| J1925 | 1D | CHASSIS |
| J1944 | 1E | CHASSIS |

http://manoman.sqhill.com

## VOLTAGE CONDITIONS

Use a digital voltmeter with a 10 MΩ input impedance, such as the TEKTRONIX DM 501A Digital Multimeter installed in a TM 500- or TM 5000-series Power Module, or a TEKTRONIX 7D13A Digital Multimeter installed in a readout-equipped 7000-series oscilloscope.

The voltage readings were taken with no plug-in units installed in the R7103.

Set the R7103 as follows:

| | |
|---|---|
| INTENSITY | Fully counterclockwise (off) |
| READOUT INTENSITY | Fully counterclockwise (off) |
| VERTICAL MODE | LEFT |
| TRIGGER SOURCE | VERT MODE |

http://manoman.sqhill.com

http://manuals.sqhill.com



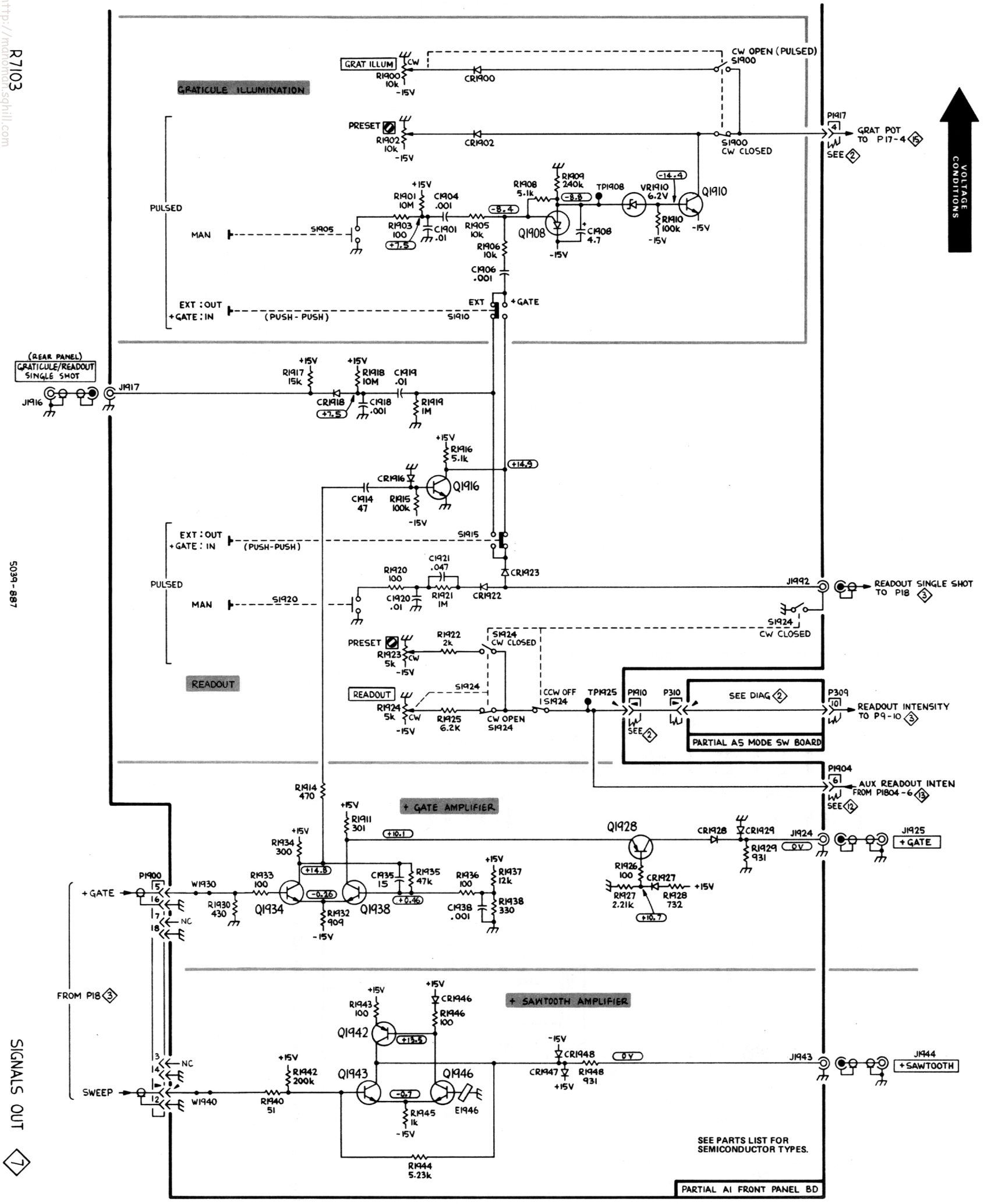

# VERTICAL CHANNEL SWITCH DIAGRAM 8

## ASSEMBLY A16

| CIRCUIT NUMBER | SCHEM LOCATION | BOARD LOCATION |
|---|---|---|
| C505 | 4B | 4B |
| C508 | 1A | 5B |
| C512 | 4A | 3B |
| C515 | 3A | 4A |
| C520 | 3A | 4A |
| C525 | 3A | 3A |
| C531 | 2A | 5A |
| C538 | 2A | 2B |
| C539 | 1A | 2B |
| C582 | 4E | 5D |
| C583 | 4E | 5D |
| C584 | 4F | 5D |
| C605 | 4D | 3E |
| C608 | 1E | 2E |
| C612 | 4E | 4E |
| C615 | 3E | 3F |
| C620 | 3E | 3F |
| C625 | 3E | 4F |
| C631 | 2E | 4F |
| C638 | 2E | 4F |
| C639 | 1E | 5E |
| C675 | 1C | 2B |
| C681 | 1C | 2D |
| C695 | 1E | 1E |
| CR552 | 3C | 5C |
| CR651 | 4C | 5B |
| CR654 | 3C | 5C |
| J502 | 4B | 4B |
| J503 | 4B | 3B |
| J592 | 1B | 5D |
| J602 | 4D | 4D |
| J603 | 4D | 3E |
| J694 | 1D | 2D |
| L582 | 4E | 5E |
| L583 | 4E | 5E |
| L584 | 4F | 5E |
| Q542 | 2A | 3B |
| Q548 | 2A | 3B |
| Q556 | 3C | 5B |
| Q558 | 3B | 5B |
| Q642 | 2E | 4E |
| Q648 | 2E | 5E |
| Q652 | 3C | 5B |
| Q656 | 3C | 2D |
| Q658 | 3C | 2D |
| Q672 | 1C | 2C |
| Q676 | 1C | 2C |
| Q682 | 1C | 2C |
| R501 | 4A | 4B |
| R502 | 4B | 4C |
| R504 | 4B | 4C |
| R505 | 4B | 4B |
| R511 | 3A | 5A |
| R512 | 3A | 5A |
| R513 | 3A | 4B |
| R514 | 3A | 5A |
| R515 | 3A | 4A |
| R516 | 3A | 4A |
| R519 | 3A | 4A |
| R520 | 3A | 4A |
| R521 | 3A | 3A |
| R524 | 3A | 3A |
| R525 | 3A | 3A |
| R526 | 3A | 3A |
| R529 | 2A | 3A |
| R530 | 3A | 2A |
| R531 | 2A | 5A |
| R532 | 2A | 5B |
| R535 | 4A | 2A |
| R536 | 4A | 2B |
| R537 | 4A | 2B |
| R538 | 2A | 2B |
| R542 | 2A | 2B |
| R543 | 1B | 3B |
| R547 | 2A | 3B |
| R548 | 2A | 2B |
| R549 | 1B | 3B |
| R550 | 1B | 3B |
| R552 | 4C | 5C |
| R555 | 3C | 5C |
| R556 | 3C | 5C |
| R557 | 3C | 5B |
| R558 | 3B | 5C |
| R559 | 1B | 4D |
| R601 | 4D | 3E |
| R602 | 4D | 4D |
| R604 | 4D | 3D |
| R605 | 4D | 3E |
| R611 | 3E | 2F |
| R612 | 3E | 2F |
| R613 | 4D | 3E |
| R614 | 3E | 2F |
| R615 | 3E | 3F |
| R616 | 3D | 3F |
| R619 | 3E | 3F |
| R620 | 3E | 3F |
| R621 | 3D | 4E |
| R624 | 3E | 4E |
| R625 | 3E | 4E |
| R626 | 3D | 4E |
| R629 | 2E | 4E |
| R630 | 3E | 5E |
| R631 | 2E | 5E |
| R632 | D2 | 4E |
| R638 | 2E | 5E |
| R642 | 2E | 5D |
| R643 | D2 | 5D |
| R646 | 3C | 5C |
| R647 | 2E | 5E |
| R648 | 2E | 5D |
| R649 | D2 | 5D |
| R650 | D2 | 4D |
| R651 | 4C | 5B |
| R652 | 3C | 5B |
| R653 | 4C | 2D |
| R654 | 3C | 1D |
| R655 | 3C | 5A |
| R656 | 3C | 2D |
| R657 | 3C | 2D |
| R658 | 3C | 2D |
| R659 | 1D | 3D |
| R671 | 1C | 1C |
| R672 | 1C | 1C |
| R675 | 1C | 2C |
| R680 | 1C | 2C |
| R681 | 1C | 2C |
| R682 | 1C | 1C |
| R683 | 1C | 1C |
| R684 | 1C | 1B |
| R690 | 2E | 1D |
| R691 | 2E | 2D |
| R694 | 1F | 2E |
| TP500 | 4E | 5E |
| TP508 | 3B | 4B |
| TP538 | 2A | 2B |
| TP552 | 4C | 5C |
| TP555 | 4C | 5C |
| TP582 | 4E | 5E |
| TP583 | 4E | 5E |
| TP584 | 4F | 5E |
| TP600 | 4F | 1E |
| TP608 | 3D | 2E |
| TP648 | 2E | 5E |
| TP657 | 4C | 6C |
| TP682 | 1C | 3E |
| TP684 | 1C | 2C |
| TP694 | 1E | 2F |
| U508 | 4B | 5B |
| U538 | 2A | 2A |
| U608 | 4D | 2E |
| U638 | 2E | 5E |
| U668 | 1B | 4C |
| U682 | 1C | 2D |
| U694 | 1E | 2E |

## CHASSIS MOUNTED PARTS

| CIRCUIT NUMBER | SCHEM LOCATION | BOARD LOCATION |
|---|---|---|
| DL592 | 1B | CHASSIS |
| P680 | 4C | CHASSIS |

http://manoman.sghill.com

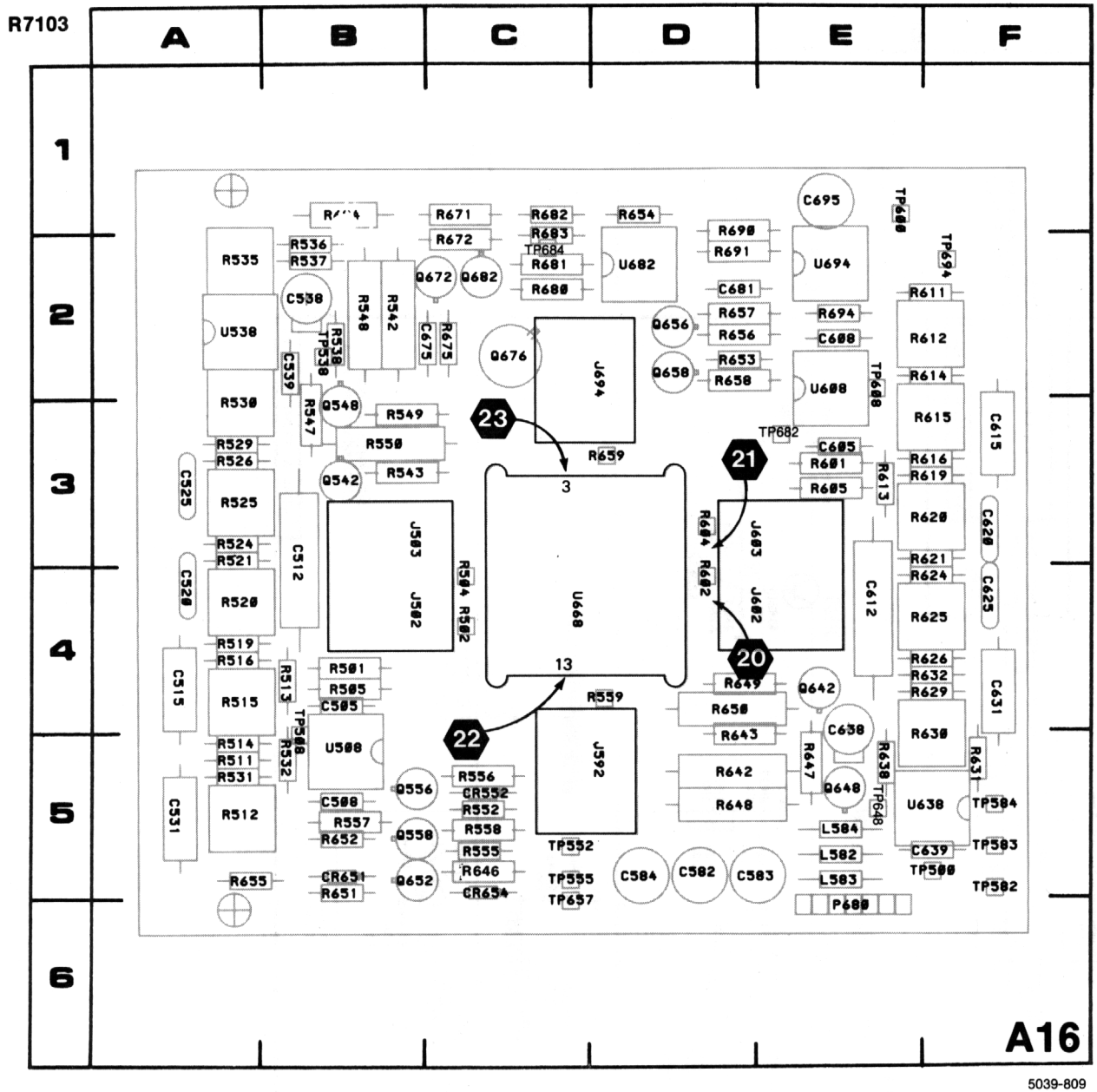


**Figure 8-9. A16—Vertical Channel Switch Board assembly.**

http://manoman.sqhill.com

## VOLTAGE AND WAVEFORM CONDITIONS

**Voltage Conditions:** Use a digital voltmeter with 10 MΩ input impedance, such as the TEKTRONIX DM 501A Digital Multimeter installed in a TM 500- or TM 5000-series power module, or a TEKTRONIX 7D13A Digital Multimeter installed in a readout-equipped 7000-series oscilloscope.

When the voltage readings were taken, a Signal Standardizer (Tektronix Part 067-0587-02) was installed in the R7103 LEFT VERT plug-in compartment. The R7103 and the Signal Standardizer were set as follows:

R7103:

| | |
|---|---|
| INTENSITY | Fully counterclockwise (off) |
| VERTICAL MODE | LEFT |
| TRIGGER SOURCE | VERT MODE |

Signal Standardizer:

| | |
|---|---|
| Test | Vert or Horiz Com Mode |

**Waveform Conditions:** The waveforms shown below were obtained with a TEKTRONIX 7904 Oscilloscope, 7B10 Time Base, and 7A13 Differential Comparator equipped with a P6053 10X Probe. (Any oscilloscope with 10 MΩ impedance and at least 60 MHz bandwidth will suffice.) The test oscilloscope was externally triggered by the signal from the Pretrig Out connector of a Signal Standardizer installed in the R7103 LEFT VERT plug-in compartment. The Signal Standardizer was set as follows:

| | |
|---|---|
| Test | Vert or Horiz +Step Resp |
| Rep Rate | 10 kHz |
| Position<br>Amplitude | Set to produce a six-division display centered around zero volts. |

A 7B-series time base, set for a free-running (not triggered) sweep, was installed in the R7103 HORIZ plug-in compartment.

20

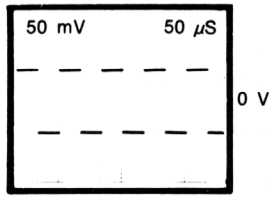


21

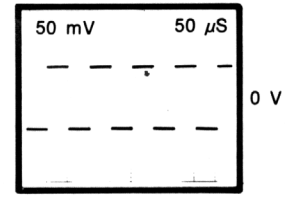


22

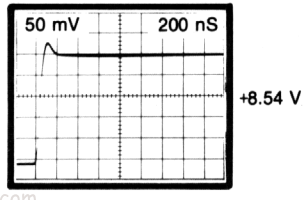


23

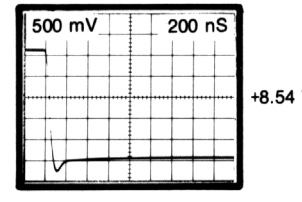


http://manoman.sqhill.com

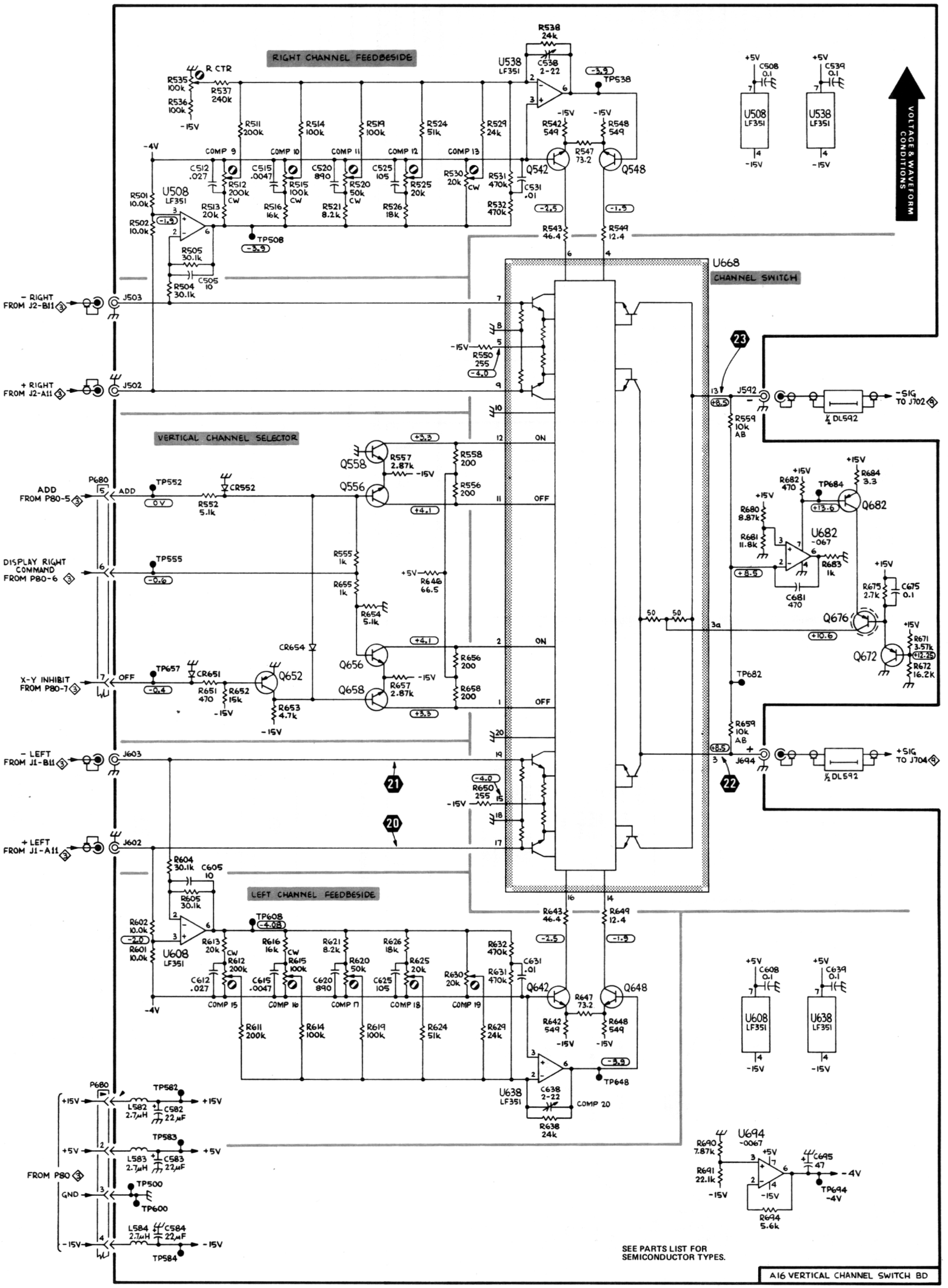


http://manoman.sg/R7103

# VERTICAL AMPLIFIER DIAGRAM 9

## ASSEMBLY A17

| CIRCUIT NUMBER | SCHEM LOCATION | BOARD LOCATION |
|---|---|---|
| C704 | 3A | 2A |
| C705 | 2A | 2A |
| C730 | 3A | 2F |
| C751 | 2B | 1D |
| C762 | 3C | 3A |
| C780 | 3E | 3B |
| C782 | 2C | 4A |
| C783 | 2C | 5B |
| C787 | 3D | 4C |
| C791 | 3D | 4D |
| C795 | 3D | 4B |
| C801 | 3D | 4B |
| C806 | 3D | 5C |
| C808 | 2E | 4D |
| C809 | 2D | 4E |
| C837 | 3E | 1D |
| C838 | 3E | 2C |
| C849 | 3E | 2C |
| C852 | 2F | 2D |
| C862 | 3F | 3D |
| C878 | 4G | 3E |
| C885 | 4G | 4E |
| C891 | 4E | 4G |
| C893 | 4E | 4G |
| C895 | 4E | 4G |
| C897 | 4F | 4G |
| CR711 | 2A | 2G |
| CR712 | 2A | 2G |
| CR767 | 3C | 4B |
| CR777 | 3C | 4B |
| CR862 | 4F | 4F |
| CR863 | 4B | 4E |
| CR864 | 4C | 4E |
| CR875 | 5G | 4G |
| CR878 | 4G | 4E |
| CR883 | 4G | 4F |
| CR886 | 1G | 3G |
| CR891 | 1F | 3G |
| CR893 | 1F | 3G |
| CR897 | 4F | 4G |
| J702 | 2A | 2A |
| J704 | 3A | 3A |
| L762 | 2C | 2B |
| L763 | 2C | 2A |
| L764 | 2C | 2A |
| L772 | 3C | 3B |
| L773 | 3C | 3A |
| L774 | 3C | 3A |
| L857 | 3F | 2D |
| L867 | 3F | 3D |
| L891 | 4E | 4G |
| L893 | 4E | 4G |
| L895 | 4E | 4G |
| L897 | 4F | 4G |
| LR885 | 4G | 3E |
| P783 | 2G | 1H |
| Q712 | 2B | 2F |
| Q718 | 4A | 2G |
| Q722 | 4A | 2G |
| Q732 | 3B | 2F |
| Q742 | 2B | 1E |
| Q748 | 3B | 1A |
| Q752 | 2B | 1E |
| Q758 | 3B | 1A |
| Q814 | 3E | 1C |
| Q824 | 2E | 1D |
| Q862 | 4F | 4F |
| Q864 | 4C | 5E |
| Q872 | 4C | 5E |
| Q873 | 5C | 5F |
| Q878 | 4G | 4E |
| Q884 | 4G | 3F |
| Q892 | 1F | 2G |
| R700 | 2A | 2G |
| R701 | 2A | 1F |
| R702 | 2A | 1G |
| R703 | 2A | 1G |
| R704 | 2A | 2G |
| R705 | 3A | 3A |
| R711 | 2A | 2G |
| R712 | 2A | 2G |
| R714 | 2B | 1E |
| R718 | 4A | 2G |
| R722 | 4A | 2G |
| R730 | 2A | 2F |
| R731 | 3A | 1E |
| R732 | 2B | 2F |
| R733 | 3B | 1E |
| R740 | 2B | 1F |
| R742 | 2B | 1E |
| R743 | 3B | 1D |
| R744 | 3B | 2B |
| R747 | 3B | 1B |
| R748 | 3B | 1A |
| R749 | 3B | 1A |
| R750 | 2B | 2E |
| R751 | 2B | 2D |
| R752 | 2B | 1E |
| R753 | 3B | 1D |
| R754 | 3B | 1B |
| R757 | 3B | 1B |
| R758 | 3B | 1B |
| R759 | 2B | 1B |
| R761 | 2C | 2A |
| R762 | 2C | 2A |
| R763 | 2C | 2A |
| R764 | 3C | 1A |
| R765 | 3C | 4A |
| R767 | 3C | 4B |
| R772 | 3C | 3A |
| R773 | 3C | 3A |
| R774 | 3C | 4A |
| R775 | 3C | 4A |
| R777 | 3C | 3B |
| R780 | 3E | 5D |
| R781 | 3C | 4A |
| R782 | 2C | 4A |
| R785 | 3C | 4B |
| R786 | 2C | 4D |
| R787 | 3D | 4B |
| R788 | 3D | 4B |
| R789 | 2D | 5D |
| R791 | 3D | 4C |
| R792 | 3D | 4B |
| R793 | 2D | 4D |
| R795 | 3D | 4C |
| R796 | 3D | 4B |
| R797 | 2D | 4D |
| R801 | 3D | 4D |
| R802 | 3D | 4B |
| R803 | 2D | 4D |
| R804 | 2D | 5D |
| R805 | 3D | 5B |
| R806 | 3D | 4C |
| R808 | 2E | 4D |
| R814 | 3E | 1C |
| R815 | 3E | 2C |
| R821 | 3E | 1C |
| R823 | 3E | 1D |
| R824 | 2E | 1D |
| R825 | 2E | 2D |
| R830 | 2D | 3C |
| R831 | 2E | 1C |
| R832 | 3E | 2C |
| R835 | 2E | 1D |
| R836 | 2E | 1C |
| R837 | 3E | 2C |
| R838 | 2E | 2C |
| R847 | 1E | 3D |
| R848 | 1E | 3D |
| R849 | 3E | 4D |
| R850 | 1E | 3D |
| R857 | 3F | 3D |
| R860 | 4F | 4F |
| R861 | 4F | 5G |
| R862 | 4F | 2E |
| R863 | 4B | 4E |
| R864 | 4C | 5E |
| R865 | 4C | 4E |
| R866 | 4B | 1G |
| R870 | 3E | 4E |
| R870 | 4C | 4E |
| R871 | 4C | 5E |
| R872 | 5C | 5F |
| R873 | 4G | 3F |
| R874 | 4G | 3F |
| R875 | 5G | 3G |
| R876 | 5G | 3G |
| R877 | 4G | 3G |
| R878 | 4G | 4E |
| R881 | 4G | 4F |
| R882 | 4G | 4F |
| R883 | 4G | 3F |
| R884 | 4G | 4F |
| R886 | 1G | 3G |
| R887 | 1F | 3G |
| R888 | 1F | 3G |
| R891 | 1F | 2G |
| R892 | 1F | 3G |
| R893 | 1F | 3H |
| R894 | 1F | 3G |
| RT813 | 3E | 1C |
| TP700 | 5E | 2B |
| TP712 | 2B | 1E |
| TP782 | 3C | 4A |
| TP800 | 5E | 3G |
| TP824 | 2E | 4D |
| TP849 | 3E | 3C |
| TP876 | 4G | 3F |
| TP878 | 4F | 3E |
| TP884 | 4G | 4E |
| TP891 | 5E | 4H |
| TP893 | 5E | 4H |
| TP894 | 1F | 3G |
| TP895 | 5E | 4H |
| TP897 | 5F | 4H |
| TP899 | 5F | 4H |
| U705 | 2A | 2G |
| U762 | 1B | 2B |
| U782 | 3C | 4A |
| U808 | 2E | 4D |
| U842 | 4E | 2C |
| U862 | 4G | 3E |
| U876A | 4G | 3G |
| U876B | 1F | 3G |
| VR852 | 1F | 2D |
| VR862 | 4F | 3D |
| VR878 | 4G | 4E |

## ASSEMBLY A18

| CIRCUIT NUMBER | SCHEM LOCATION | BOARD LOCATION |
|---|---|---|
| C881 | 3G | 2B |
| C882 | 3G | 2B |
| P883 | 2G | 1B |
| U883 | 2G | 1A |

## CHASSIS MOUNTED PARTS

| CIRCUIT NUMBER | SCHEM LOCATION | BOARD LOCATION |
|---|---|---|
| P782 | 5B | CHASSIS |
| P783 | 3G | CHASSIS |
| P789 | 4A | CHASSIS |
| P790 | 2A | CHASSIS |
| P883 | 3G | CHASSIS |

http://manoman.sqhill.com

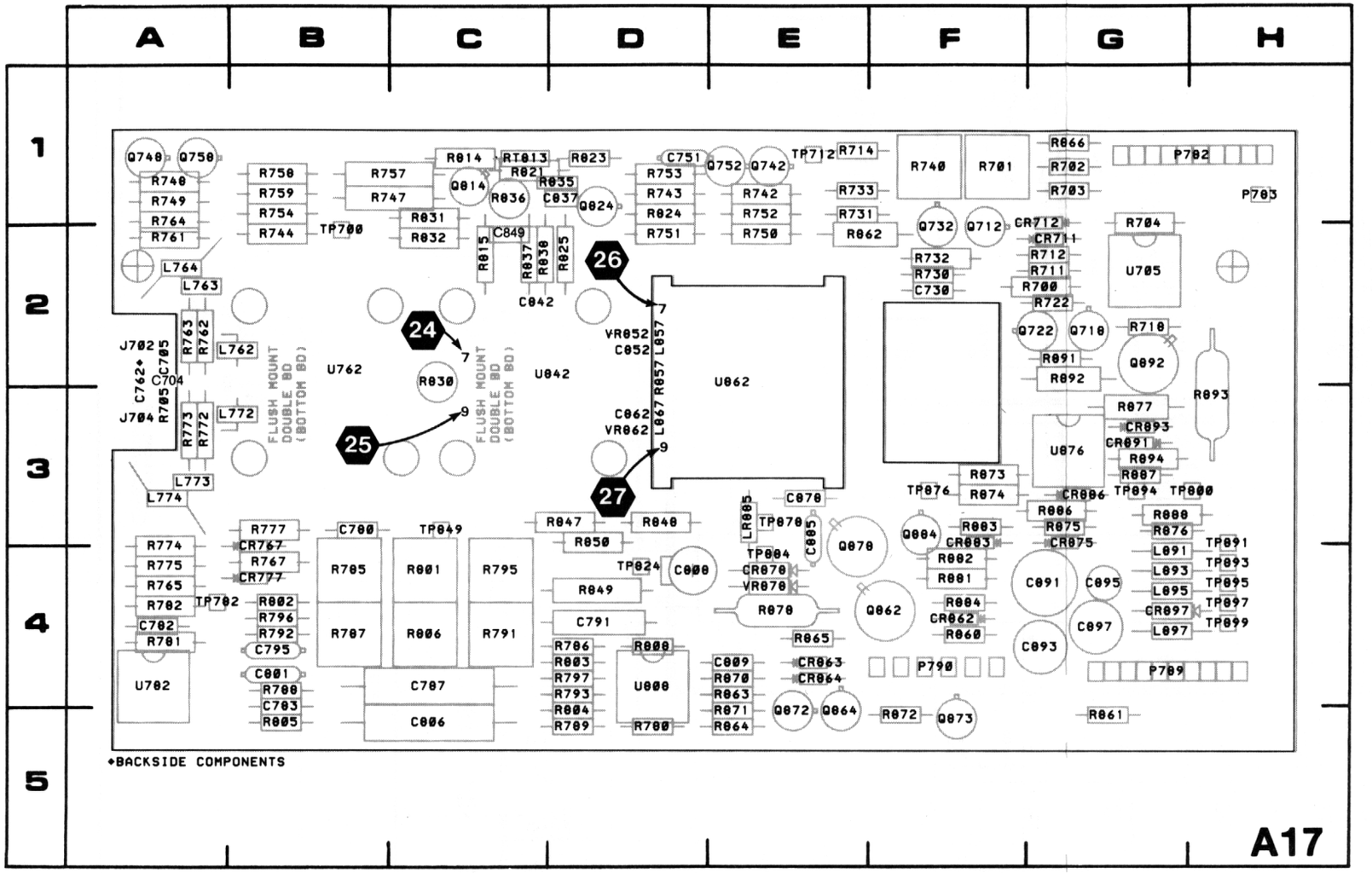


Figure 8-10. A17—Vertical Amplifier Board assembly.

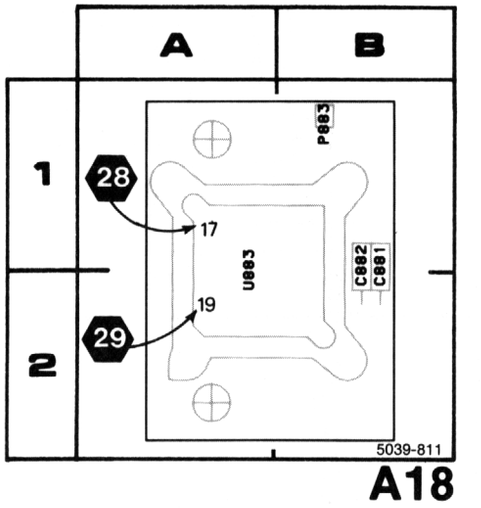


Figure 8-11. A18—CRT Termination Board assembly.

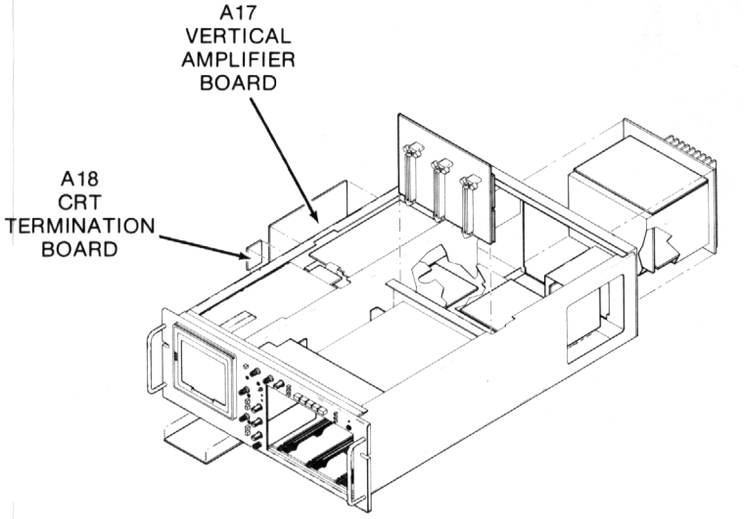


http://manoman.sqhill.com

## VOLTAGE AND WAVEFORM CONDITIONS

**Voltage Conditions:** Use a digital voltmeter with 10 MΩ input impedance, such as the TEKTRONIX DM 501A Digital Multimeter installed in a TM 500- or TM 5000-series power module, or a TEKTRONIX 7D13A Digital Multimeter installed in a readout-equipped 7000-series oscilloscope.

The voltages shown on the diagram were obtained with all R7103 front-panel variable controls, except INTENSITY, set to midrange; INTENSITY was set fully counterclockwise. Other R7103 front-panel controls were set as follows:

VERTICAL MODE .....LEFT
TRIGGER SOURCE .....VERT MODE
CALIBRATOR .....4 V

A Signal Standardizer (Tektronix Part 067-0587-02), set to Vert or Horiz Com Mode, was installed in the R7103 LEFT VERT.

**Waveform Conditions:** The waveforms shown below were obtained with a test oscilloscope system with a 1 MΩ input impedance and at least 60 MHz bandwidth (in this case, a TEKTRONIX 7904 Oscilloscope, 7B10 Time Base, and 7A13 Differential Comparator with a P6053 10X Probe). The R7103 had a 7A-series amplifier plug-in unit in its LEFT VERT compartment and a 7B-series time base in its HORIZ compartment. The output of the R7103 CALIBRATOR was connected to the input of the 7A-amplifier, and the amplifier was set to produce a six- to eight-division display on the R7103 crt. The test oscilloscope was externally triggered with the R7103 CALIBRATOR signal.

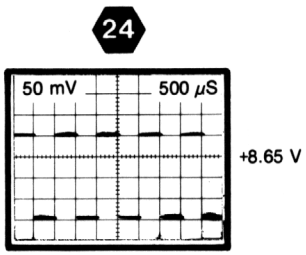


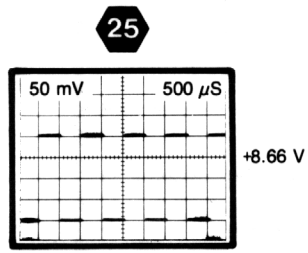


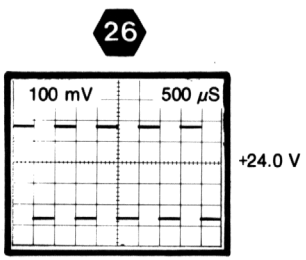


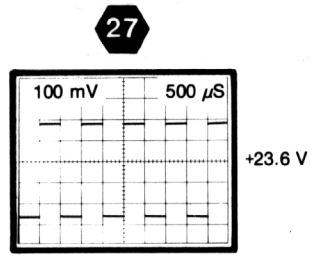


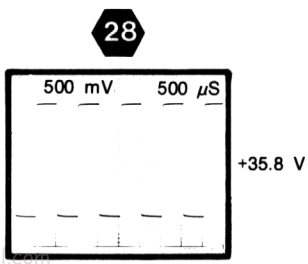


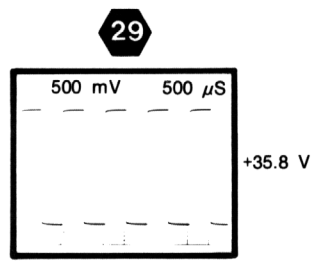


http://manoman.sqhil.com

VOLTAGE & WAVEFORM CONDITIONS

DELAY-LINE COMPENSATION

FEEDBESIDE

AUXILIARY AMPLIFIER

POWER SUPPLY SHUTDOWN

OUTPUT AMPLIFIER

SEE PARTS LIST FOR SEMICONDUCTOR TYPES.

A17 PARTIAL VERTICAL AMPLIFIER BOARD

AIB TERMINATION BOARD

FLEXCON

PARTIAL V1850 SEE 3

U842 VERTICAL DRIVER

U862 MAIN VERTICAL OUTPUT

- SIG FROM DL592 8

+ SIG FROM DL592 8

Y READOUT FROM J3405 6

AUX Y AXIS FROM J78 4

X-Y INHIBIT FROM P89-8 3

+23.7V TO U862-12 R886

TO P882 1

TO P89 3

FAULT FROM P882-10 1

P782 (SEE 1)

P789 (SEE 1)

P790 (SEE 1)

P783

P883

P89

P784

S70

R7103

5039-889

VERTICAL AMPLIFIER 9

http://manuals.tekhill.com

# HORIZONTAL CHANNEL SWITCH DIAGRAM 10

## ASSEMBLY A19

| CIRCUIT NUMBER | SCHEM LOCATION | BOARD LOCATION |
|---|---|---|
| C974 | 3E | 3E |
| C980 | 3D | 5D |
| C982 | 2D | 5C |
| C985 | 2D | 5C |
| C988 | 2D | 5B |
| J942 | 4B | 4C |
| J943 | 4B | 3C |
| J970 | 4D | 4E |
| J971 | 4D | 3E |
| Q914 | 2C | 1C |
| Q923 | 3C | 2D |
| Q924A | 3C | 2D |
| Q924B | 3B | 2D |
| Q924C | 3C | 2D |
| Q924D | 3C | 2D |
| Q924E | 3B | 2D |
| Q992 | 2D | 4D |
| Q994 | 1D | 4D |
| R902 | 3C | 2D |
| R905 | 2C | 2C |
| R906 | 2C | 2C |
| R913 | 2C | 2D |
| R921 | 3C | 2D |
| R922 | 4C | 2C |
| R923 | 3C | 1B |
| R924 | 3C | 2D |
| R926 | 3B | 1D |
| R927 | 3B | 1D |
| R928 | 3B | 1B |
| R932 | 2B | 2C |
| R933 | 2B | 2C |
| R934 | 2C | 2D |
| R963 | 2A | 3A |
| R968 | 2B | 3A |
| R969 | 2B | 3A |
| R971 | 3D | 3E |
| R972 | 3E | 3E |
| R973 | 3D | 4E |
| R974 | 3E | 4E |
| R975 | 3D | 5D |
| R976 | 3E | 5D |
| R978 | 3D | 5E |
| R979 | 3D | 4D |
| R980 | 3D | 5C |
| R982 | 2D | 5C |
| R985 | 2D | 5B |
| R988 | 2D | 5B |
| R989 | 2D | 4D |
| R992 | 2D | 4D |
| R993 | 2E | 5C |
| R994 | 1E | 5E |
| R995 | 1D | 5D |
| R996 | 1D | 5E |
| R997 | 2D | 4E |
| R998 | 2D | 4C |
| R999 | 2D | 4C |
| U962 | 1A | 3D |
| U974 | 3D | 4E |
| W913 | 2C | 2D |
| W932 | 2B | 4D |
| W933 | 2B | 4D |
| W934 | 2C | 4D |
| W961 | 2A | 3C |
| W962 | 2A | 3B |
| W963 | 2A | 2B |
| W965 | 2A | 2B |
| W966 | 2A | 2B |
| W967 | 2A | 2D |
| W969 | 2B | 2D |
| W992 | 2D | 4D |
| W999 | 2D | 4D |

*Partial A19 also shown on diagram 11.*

## CHASSIS MOUNTED PARTS

| CIRCUIT NUMBER | SCHEM LOCATION | BOARD LOCATION |
|---|---|---|
| P882 | 4C | CHASSIS |

http://manoman.sqhill.com

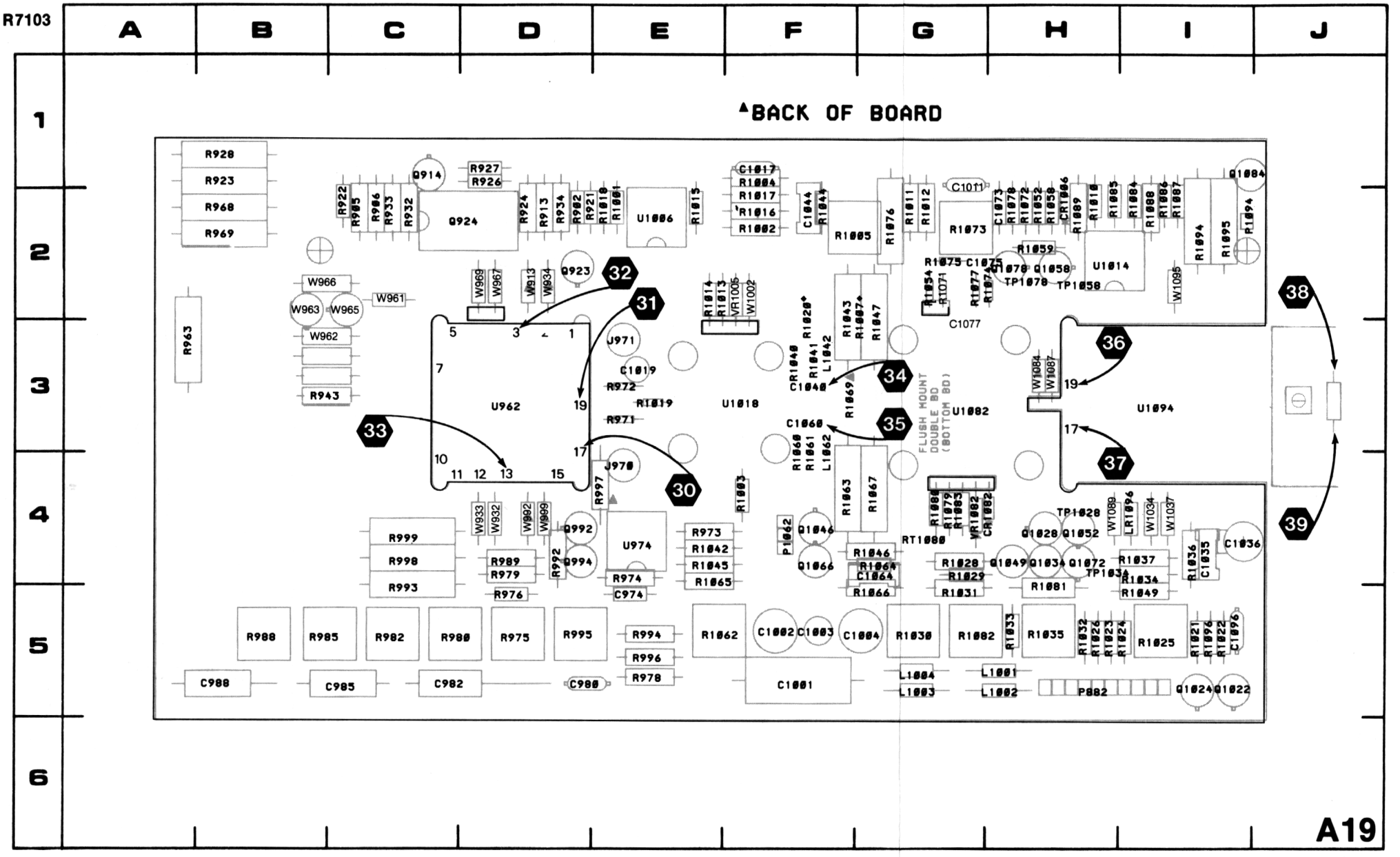


5039-812

**Figure 8-12. A19—Horizontal Amplifier Board assembly.**

http://manoman.sqhill.com

## VOLTAGE AND WAVEFORM CONDITIONS

**Voltage Conditions:** Use a digital voltmeter with 10 MΩ input impedance, such as the TEKTRONIX DM 501A Digital Multimeter installed in a TM 500- or TM 5000-series power module, or a TEKTRONIX 7D13A Digital Multimeter installed in a readout-equipped 7000-series oscilloscope.

The voltages shown on the diagram were obtained with the R7103 front-panel variable controls, except INTENSITY and READOUT INTENSITY, set to midrange (INTENSITY and READOUT INTENSITY were set fully counterclockwise). Other R7103 front-panel controls were set as follows:

VERTICAL MODE .....LEFT
TRIGGER SOURCE .....VERT MODE
CALIBRATOR .....4 V

A Signal Standardizer was installed in the R7103 LEFT VERT plug-in compartment; it was set to Vert or Horiz Com Mode.

**Waveform Conditions:** The R7103 had a 7A-series amplifier plug-in unit in its LEFT VERT compartment and a 7B-series time base in its HORIZ compartment. The output of the R7103 CALIBRATOR was connected to the input of the 7A-amplifier, and the amplifier was set to produce a six- to eight-division display on the R7103 crt. The test oscilloscope was externally triggered with the R7103 CALIBRATOR signal.

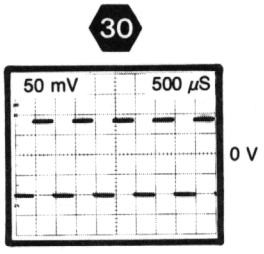


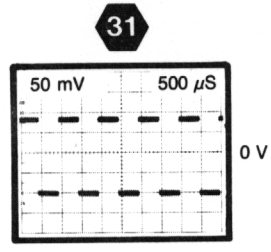


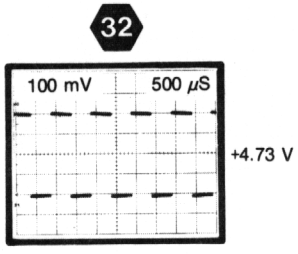


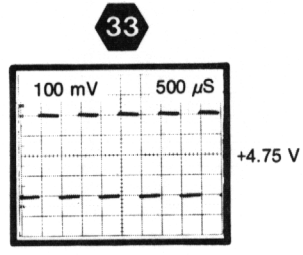


http://manoman.sqhill.com

http://manomanuals.com



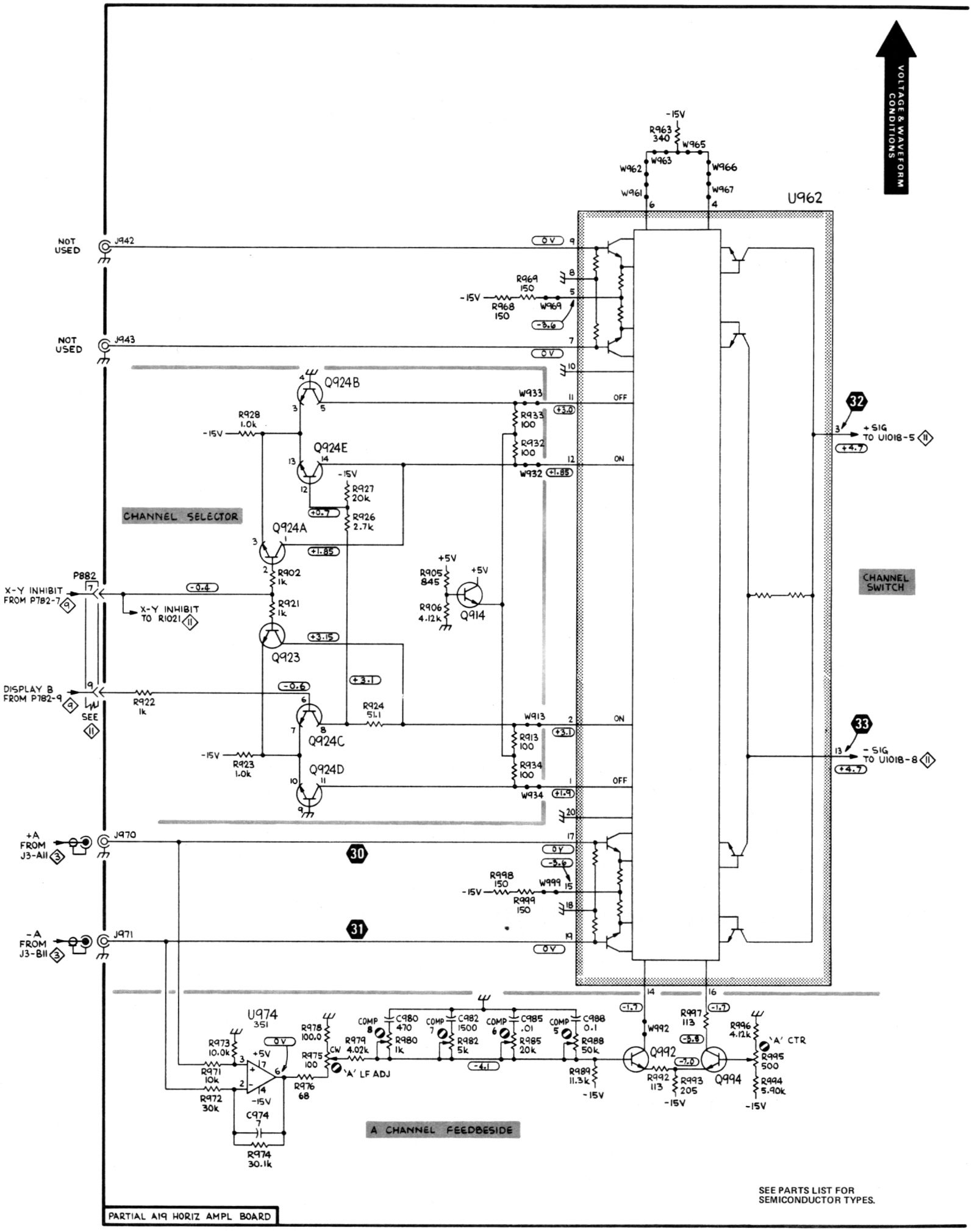

# HORIZONTAL AMPLIFIER DIAGRAM 11

## ASSEMBLY A19

| CIRCUIT NUMBER | SCHEM LOCATION | BOARD LOCATION |
|---|---|---|
| C1001 | 4D | 5F |
| C1002 | 4D | 5F |
| C1003 | 5D | 5F |
| C1004 | 5D | 5G |
| C1011 | 3E | 2G |
| C1017 | 3A | 1F |
| C1019 | 2B | 3E |
| C1035 | 4F | 4I |
| C1036 | 4F | 4I |
| C1040 | 1B | 3F |
| C1044 | 2B | 2F |
| C1060 | 3B | 3F |
| C1064 | 3B | 4G |
| C1073 | 3C | 2H |
| C1075 | 2D | 2G |
| C1077 | 2D | 2G |
| C1096 | 5E | 5I |
| CR1006 | 2E | 2H |
| CR1082 | 4D | 4G |
| L1001 | 4D | 5H |
| L1002 | 4D | 5H |
| L1003 | 5D | 5G |
| L1004 | 5D | 5G |
| L1042 | 2B | 3F |
| L1062 | 3B | 4F |
| LR1096 | 5E | 4I |
| P1062 | 2B | 4F |
| P1094 | 4G | 1I |
| Q1022 | 4B | 5I |
| Q1024 | 4B | 5I |
| Q1028 | 4B | 4H |
| Q1034 | 4B | 4H |
| Q1046 | 2C | 4F |
| Q1049 | 2C | 4H |
| Q1052 | 2C | 4H |
| Q1058 | 2C | 2H |
| Q1066 | 3C | 4F |
| Q1072 | 3C | 4H |
| Q1078 | 3C | 2G |
| Q1084 | 2E | 1I |
| R1001 | 2A | 2E |
| R1002 | 2A | 2F |
| R1003 | 3B | 4F |
| R1004 | 2A | 1F |
| R1005 | 2A | 2F |
| R1007 | 2D | 2G |
| R1010 | 2E | 2H |
| R1011 | 2E | 2G |
| R1012 | 3E | 2G |
| R1013 | 2A | 2E |
| R1014 | 2A | 2E |
| R1015 | 2A | 2E |
| R1016 | 3A | 2F |
| R1017 | 3A | 2F |
| R1018 | 2B | 2E |
| R1019 | 2B | 3E |
| R1020 | 3A | 3F |
| R1021 | 4A | 5I |
| R1022 | 4B | 5I |
| R1023 | 4B | 5H |
| R1024 | 4B | 5I |
| R1025 | 4B | 5I |
| R1026 | 4B | 5H |
| R1028 | 4B | 4G |
| R1029 | 4C | 4G |
| R1030 | 4B | 5G |
| R1031 | 4B | 5G |
| R1032 | 4B | 5H |
| R1033 | 4B | 5H |
| R1034 | 4B | 4I |
| R1034 | 4F | 4I |
| R1035 | 4B | 5H |
| R1036 | 4F | 4I |
| R1037 | 4F | 4I |
| R1040 | 1B | 3F |
| R1041 | 1B | 3F |
| R1042 | 2C | 4E |
| R1043 | 2B | 3F |
| R1044 | 2B | 2F |
| R1045 | 2C | 4E |
| R1046 | 2C | 4G |
| R1047 | 2B | 2G |
| R1049 | 2C | 5I |
| R1052 | 2C | 2H |
| R1054 | 3D | 2G |
| R1058 | 2C | 2H |
| R1059 | 2C | 2H |
| R1060 | 3B | 4F |
| R1061 | 3B | 3F |
| R1062 | 2C | 5E |
| R1063 | 3B | 4F |
| R1064 | 3B | 4G |
| R1065 | 2C | 4E |
| R1066 | 3C | 5G |
| R1067 | 3B | 4G |
| R1069 | 2B | 3F |
| R1071 | 2D | 2G |
| R1072 | 3C | 2H |
| R1073 | 3C | 2G |
| R1074 | 2D | 2G |
| R1075 | 2D | 2G |
| R1076 | 2D | 2G |
| R1077 | 2D | 2G |
| R1078 | 3C | 2H |
| R1079 | 1E | 4G |
| R1080 | 1E | 4G |
| R1081 | 1E | 5H |
| R1082 | 1E | 5G |
| R1083 | 1E | 4G |
| R1084 | 2F | 1I |
| R1085 | 2F | 2H |
| R1086 | 2E | 1I |
| R1087 | 2E | 1I |
| R1088 | 2E | 1I |
| R1089 | 2E | 2H |
| R1094 | 3F | 1I |
| R1095 | 3F | 1I |
| R1096 | 5E | 5I |
| RT1080 | 1E | 4G |
| TP1028 | 4C | 4H |
| TP1034 | 3C | 4H |
| TP1058 | 2C | 2H |
| TP1078 | 3C | 2H |
| U1006 | 2A | 2E |
| U1014A | 2F | 2H |
| U1014B | 3E | 2H |
| U1018 | 1B | 3F |
| U1082 | 1D | 3G |
| U1094 | 1F | 3I |
| VR1005 | 2A | 2F |
| VR1082 | 4E | 4G |
| W1002 | 2A | 2F |
| W1034 | 4F | 4I |
| W1037 | 4F | 4I |
| W1084 | 2E | 3H |
| W1087 | 2F | 3H |
| W1089 | 3F | 4H |
| W1095 | 3F | 2I |

## CHASSIS MOUNTED PARTS

| CIRCUIT NUMBER | SCHEM LOCATION | BOARD LOCATION |
|---|---|---|
| C1098 | 4G | CHASSIS |
| LR1097 | 4G | CHASSIS |
| LR1098 | 4G | CHASSIS |
| P782 | 4A | CHASSIS |
| P790 | 4A | CHASSIS |
| P882 | 4D | CHASSIS |
| R1099 | 4G | CHASSIS |

http://manoman.sqhill.com

## VOLTAGE AND WAVEFORM CONDITIONS

**Voltage Conditions:** Use a digital voltmeter with 10 MΩ input impedance, such as the TEKTRONIX DM 501A Digital Multimeter installed in a TM 500- or TM 5000-series power module, or a TEKTRONIX 7D13A Digital Multimeter installed in a readout-equipped 7000-series oscilloscope.

The voltages shown on the diagram were obtained with all R7103 front-panel variable controls, except INTENSITY and READOUT INTENSITY, set to midrange (INTENSITY and READOUT INTENSITY were set fully counterclockwise). Other R7103 front-panel controls were set as follows:

VERTICAL MODE .....LEFT
TRIGGER SOURCE .....VERT MODE
CALIBRATOR .....4 V

A 7A-series amplifier plug-in unit was installed in the R7103 HORIZ plug-in compartment, and set as follows:

Position .....Centered
Volts/Div .....0.5
Input signal .....None

**Waveform Conditions:** The waveforms shown below were obtained with a test oscilloscope with 1 MΩ input impedance and bandwidth of at least 60 MHz (TEKTRONIX 7904 Oscilloscope, 7B10 Time Base, and 7A13 Differential Comparator with a P6053 10X Probe). A 7A-series amplifier was installed in the R7103 HORIZ compartment and the output of the R7103 CALIBRATOR was connected to the input of the 7A-amplifier. The R7103 INTENSITY was set for a display of moderate brightness, and the CALIBRATOR signal was used to externally trigger the test oscilloscope. The 7A-amplifier was set to 0.5 V/Div to produce a display of six to eight divisions, centered on the R7103 crt.

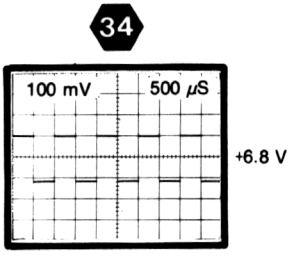


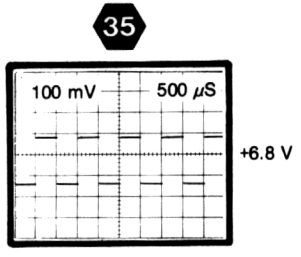


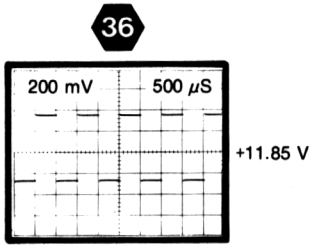


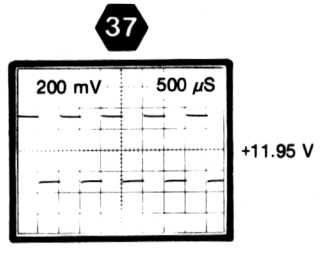


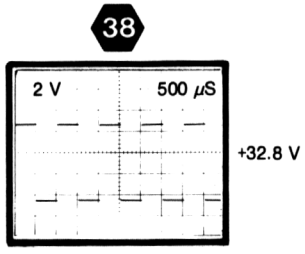


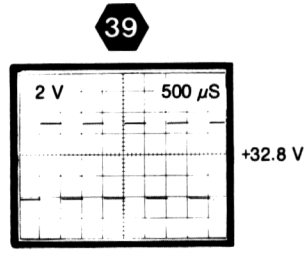


http://manoman.sqhill.com

VOLTAGE & WAVEFORM CONDITIONS

INPUT CLAMP

OUTPUT AMPLIFIER

U1018 CLAMP

U1082 TRIGGER AMPLIFIER

U1094 HORIZONTAL OUTPUT

+SIG FROM U962-3

BEAMFINDER FROM P782-8

CLAMP ADJ R1005 500

VR1005 3V

R1004 2.49k

R1001 56k

R1002 5.23k

W1002

R1014 7.5k

R1013 47k

R1015 47k

U1006 -0067

R1018 51

R1019 51

C1019 2.2µF

R1016 86.6k

R1017 130.0k

C1017 .001

R1020 43.2k

C1040 2.5-9

R1040 12

R1041 12

L1042 130µH

L1062 130µH

R1043 45.3

C1044 4.7

R1044 910

R1047 60.0

R1046 23.2k

Q1046

R1045 88.7k

R1042 866

R1062 500 LF GAIN

R1065 88.7k

Q1066

R1066 23.2k

R1067 60.0

R1064 910

R1063 45.3

C1064 4.7

R1069 2.7k

R1060 12

R1061 12

C1060 2.5-9 COMP 10

SUBSTR

R1003 1k

- SIG FROM U962-13

R1052 820

Q1052

TP1058

Q1058

R1058 130

R1059 5.1

R1075 82

C1075 51

SP DAMP R1073 50

C1073 .01

R1078 130

Q1078

TP1078

Q1072

R1072 820

R1049 453

Q1049

C1077 SEL

R1077 51

R1076 84.5

R1071 51

NC

R1007 511

R1074 10

R1054 10

+50V R1081 4.3k

HF GAIN

R1082 1k

R1083 2.2k

R1080 100k

RT1080 100k

R1079 470

-15V

CR1082

VR1082 +5V

W1084

Q1084

R1084 12k

R1085 1.5k

R1086 10

R1087 10

R1088 5.11k

R1089 25.5k

U1014A

W1087

W1089

+11.0V

R1010 10k

CR1006

R1011 6.49k

C1011 .005

R1012 12.1 K

U1014B

R1094 51.1

R1095 51.1

W1095

R1036 2.74k

C1036 2-10

C1035 7.5

R1034 976

R1037 976

DELAY ADJ

W1034

W1037

20k

20k

HORIZONTAL CRT FLEXCON, INPUT

PARTIAL V1850 SEE 4

R1099 TERMINATION RESISTOR NETWORK

LR1098 62nH

LR1097 62nH

162

33.7

33.7

100

180

P1094

C1098 0.1

HORIZONTAL CRT FLEXCON, OUTPUT

X READOUT FROM J3404

P790

P782

P882

R.O. GAIN

R1033 1.8k

R1035 50

R1032 270

Q1034

TP1034

R1031 10.5k

R1029 3.6k

CTR

R1030 1k

R1028 10.5k

Q1028

TP1028

R1024 12k

R1023 510

R1026 270

R1025 25k

R.O. CTR

Q1024

R1022 20k

R1021 1k

X-Y INHIBIT FROM P882-7

Q1022

PARTIAL A17 VERTICAL AMPL BD

READOUT POSITIONING

TO / FROM P782

+50V L1001 2.7µH C1001 10µF

+15V L1002 2.7µH C1002 22µF

+5V L1003 2.7µH C1003 22µF

GND

-15V L1004 2.7µH C1004 22µF

FAULT

+15V R1096 10 C1096 .001

LR1096 0.5nH 100

PARTIAL A19 HORIZ AMPLIFIER BD

SEE PARTS LIST FOR SEMICONDUCTOR TYPES.

R7103

5039-891

HORIZONTAL AMPLIFIER 11

http://manoman.sqhm.com

# INTENSITY LIMITER AND Z-AXIS DIAGRAM 12

## ASSEMBLY A1

| CIRCUIT NUMBER | SCHEM LOCATION | BOARD LOCATION |
|---|---|---|
| C1950 | 3A | 1E |
| C1952 | 3A | 2D |
| C1953 | 3A | 1E |
| C1955 | 3B | 2E |
| C1956 | 3B | 2E |
| C1968 | 2B | 5E |
| C1969 | 2B | 5D |
| C1971 | 3C | 3F |
| C1982 | 4C | 2G |
| C1984 | 3C | 3F |
| C1985 | 3C | 4F |
| C1985 | 3C | 4F |
| C1990 | 4D | 1E |
| C1993 | 3D | 5F |
| C1994 | 1A | 5E |
| C1994 | 2C | 5E |
| C1995 | 1A | 2F |
| C1996 | 1A | 2F |
| C1997 | 1A | 2F |
| CR1963 | 3B | 4E |
| CR1971 | 4B | 3F |
| CR1972 | 2B | 4E |
| CR1974 | 4C | 3E |
| CR1991 | 2D | 4F |
| CR1992 | 3C | 3F |
| CR1992 | 3C | 3F |
| CR1993 | 2E | 4F |
| CR1994 | 3E | 4F |
| CR1998 | 4C | 2F |
| L1995 | 1A | 2F |
| L1996 | 1A | 1F |
| L1997 | 1A | 2F |
| P1904 | 1A | 1F |
| P1909 | 2C | 1G |
| P1909 | 4D | 1G |
| Q1956 | 3B | 4D |
| Q1970 | 2C | 4E |
| Q1974 | 4C | 2E |
| Q1978 | 4C | 2F |
| Q1980 | 4C | 2E |
| Q1982 | 4C | 2E |
| Q1994 | 3D | 5G |
| Q1995 | 3D | 5F |
| Q1998 | 4C | 2F |
| Q1999 | 5D | 1F |
| R1950 | 3A | 1E |
| R1951 | 3A | 1E |
| R1952 | 3A | 4E |
| R1953 | 3A | 1E |
| R1954 | 3B | 3E |
| R1955 | 3B | 2E |
| R1956 | 3B | 3D |
| R1957 | 3B | 4E |
| R1958 | 3B | 2E |
| R1959 | 4A | 4E |
| R1960 | 4A | 3E |
| R1961 | 4B | 3E |
| R1962 | 4B | 3E |
| R1963 | 3B | 4E |
| R1964 | 3B | 4E |
| R1965 | 3B | 4E |
| R1966 | 3B | 4E |
| R1967 | 2B | 5E |
| R1968 | 2B | 5E |
| R1969 | 2C | 5E |
| R1970 | 2C | 5E |
| R1971 | 4C | 3E |
| R1972 | 2B | 5E |
| R1973 | 2B | 4E |
| R1974 | 4C | 3E |
| R1975 | 2B | 3E |
| R1976 | 2B | 5E |
| R1977 | 2B | 4E |
| R1979 | 3C | 4F |
| R1980 | 4C | 1E |
| R1981 | 4C | 2E |
| R1982 | 4C | 2F |
| R1983 | 3C | 3F |
| R1985 | 3C | 4F |
| R1985 | 3C | 4F |
| R1986 | 3C | 4F |
| R1986 | 3C | 4F |
| R1987 | 3D | 5F |
| R1988 | 4D | 1E |
| R1989 | 4D | 1E |
| R1990 | 4D | 1F |
| R1991 | 3D | 5F |
| R1992 | 3D | 5E |
| R1993 | 3D | 4F |
| R1994 | 3D | 4F |
| R1995 | 3D | 4F |
| R1996 | 4C | 2F |
| R1997 | 4C | 2F |
| R1998 | 5D | 1F |
| R1999 | 4D | 1F |
| TP1952 | 3A | 2D |
| TP1956 | 3B | 1F |
| TP1958 | 3B | 4D |
| TP1962 | 4B | 2E |
| TP1968 | 2C | 5E |
| TP1970 | 3C | 4E |
| TP1986 | 3D | 4F |
| TP1991 | 3D | 4F |
| TP1992 | 3D | 4F |
| U1952 | 3A | 2E |
| U1958A | 3B | 3E |
| U1958B | 4B | 3E |
| U1968 | 2C | 5E |
| U1970 | 3C | 3E |
| U1986 | 3C | 3F |
| U1992 | 3D | 5F |

*Partial A1 also shown on diagrams 2 and 7.*

## ASSEMBLY A21

| CIRCUIT NUMBER | SCHEM LOCATION | BOARD LOCATION |
|---|---|---|
| C1601 | 1E | 4A |
| C1605 | 2E | 3A |
| C1611 | 1E | 4A |
| C1615 | 1E | 3A |
| C1619 | 2G | 2B |
| C1623 | 1G | 2C |
| C1628 | 1H | 2D |
| C1635 | 3F | 4B |
| C1636 | 3F | 4B |
| C1638 | 2F | 5D |
| C1642 | 4E | 2C |
| C1643 | 4E | 1B |
| C1644 | 3E | 3B |
| C1645 | 5E | 1B |
| C1646 | 4E | 1B |
| C1651 | 4F | 4C |
| C1653 | 4F | 5D |
| C1656 | 4F | 3C |
| C1660 | 5G | 4C |
| C1663 | 3F | 4C |
| C1664 | 3G | 4D |
| C1665 | 4G | 3C |
| C1671 | 3H | 3D |
| C1672 | 3G | 4D |
| C1675 | 4G | 3C |
| C1676 | 3G | 4D |
| C1677 | 4G | 2D |
| CR1600 | 2F | 3B |
| CR1607 | 2F | 2C |
| CR1608 | 2E | 4A |
| CR1609 | 2F | 3C |
| CR1618 | 1E | 4A |
| CR1623 | 1G | 2C |
| CR1624 | 1E | 3A |
| CR1649 | 4F | 4D |
| CR1665 | 4G | 3C |
| CR1666 | 4G | 3C |
| CR1675 | 4G | 4D |
| CR1676 | 3G | 3D |
| CR1677 | 4G | 3D |
| CR1678 | 4G | 4D |
| J1606 | 1E | 5B |
| J1632 | 1E | 5A |
| L1627 | 1F | 3B |
| L1643 | 4E | 1A |
| L1645 | 5E | 1A |
| LR1644 | 4E | 1A |
| P1605 | 3E | 1A |
| Q1603 | 2F | 3B |
| Q1607 | 2F | 2C |
| Q1608 | 1E | 4B |
| Q1617 | 2G | 2B |
| Q1618 | 1E | 4A |
| Q1620 | 2G | 1B |
| Q1626 | 1F | 3B |
| Q1629 | 1G | 2C |
| Q1632 | 3F | 4B |
| Q1644 | 3E | 2B |
| Q1648 | 3F | 4B |
| Q1652 | 3F | 4B |
| Q1658 | 4F | 4C |
| Q1664 | 3G | 4C |
| Q1666 | 4G | 3C |
| Q1668 | 4G | 3C |
| Q1672 | 3G | 4E |
| Q1676 | 3G | 3D |
| R1600 | 2F | 3B |
| R1601 | 1E | 4A |
| R1602 | 1E | 4B |
| R1603 | 2F | 3B |
| R1604 | 2E | 3A |
| R1605 | 2E | 3A |
| R1606 | 2F | 3B |
| R1607 | 2F | 2C |
| R1608 | 2F | 2B |
| R1610 | 2G | 3B |
| R1611 | 1E | 4A |
| R1612 | 1E | 4A |
| R1613 | 1E | 4A |
| R1614 | 1E | 3A |
| R1615 | 1E | 3A |
| R1616 | 1E | 3A |
| R1617 | 2G | 3B |
| R1618 | 2G | 2B |
| R1619 | 2G | 2B |
| R1620 | 2G | 2B |
| R1621 | 1G | 1C |
| R1622 | 1G | 1C |
| R1623 | 1G | 2C |
| R1624 | 1E | 3A |
| R1625 | 1E | 3A |
| R1626 | 1E | 3B |
| R1627 | 1F | 3B |
| R1628 | 1H | 2D |
| R1630 | 2G | 2C |
| R1632 | 2F | 4B |
| R1633 | 3F | 4B |
| R1634 | 2G | 2C |
| R1635 | 3F | 4B |
| R1636 | 3F | 4B |
| R1637 | 3F | 5B |
| R1638 | 2F | 5C |
| R1639 | 2G | 2B |
| R1641 | 3E | 2A |
| R1642 | 3E | 2A |
| R1643 | 3E | 2B |
| R1644 | 3F | 2A |
| R1645 | 3F | 4B |
| R1646 | 3F | 3B |
| R1647 | 3F | 3B |
| R1649 | 4F | 4C |
| R1651 | 4F | 4C |
| R1652 | 4F | 5C |
| R1656 | 4F | 4D |
| R1657 | 4F | 4C |
| R1658 | 4F | 3B |
| R1659 | 5G | 4C |
| R1660 | 5G | 4D |
| R1662 | 3G | 4D |
| R1663 | 4F | 4C |
| R1664 | 3G | 4D |
| R1665 | 4G | 3C |
| R1668 | 4G | 3C |
| R1670 | 3H | 5D |
| R1671 | 4G | 3C |
| R1672 | 3G | 5D |
| R1673 | 4G | 3C |
| R1674 | 4G | 2C |
| R1675 | 4G | 3C |
| R1676 | 3G | 4D |
| R1679 | 4G | 3D |
| T1664 | 4G | 3C |
| TP1628 | 1H | 2C |
| TP1672 | 3G | 4D |
| TP1678 | 4G | 3D |
| VR1653 | 4F | 4D |
| VR1671 | 3H | 3D |

*Partial A21 also shown on diagram 13.*

## CHASSIS MOUNTED PARTS

| CIRCUIT NUMBER | SCHEM LOCATION | BOARD LOCATION |
|---|---|---|
| DS1970 | 3C | CHASSIS |
| DS1994 | 3E | CHASSIS |
| J1989 | 5D | CHASSIS |
| S1988 | 4D | CHASSIS |

http://manoman.sqhill.com

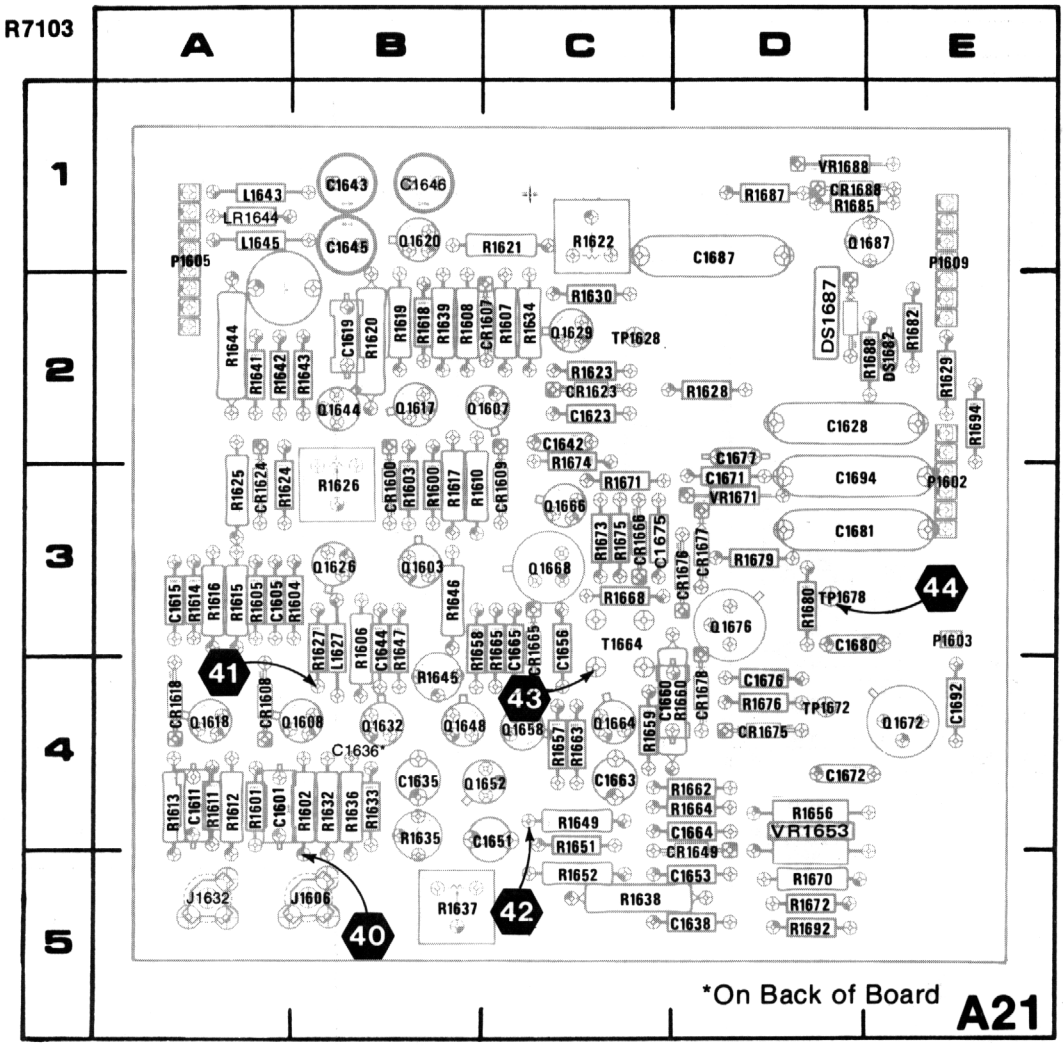


5039-813

**Figure 8-13. A21—Z-Axis Board assembly.**

http://manoman.sqhill.com

## ASSEMBLY A1

| CIRCUIT NUMBER | SCHEM LOCATION | BOARD LOCATION |
|---|---|---|
| C1950 | 3A | 1E |
| C1952 | 3A | 2D |
| C1953 | 3A | 1E |
| C1955 | 3B | 2E |
| C1956 | 3B | 2E |
| C1968 | 2B | 5E |
| C1969 | 2B | 5D |
| C1971 | 3C | 3F |
| C1982 | 4C | 2G |
| C1984 | 3C | 3F |
| C1985 | 3C | 4F |
| C1985 | 3C | 4F |
| C1990 | 4D | 1E |
| C1993 | 3D | 5F |
| C1994 | 1A | 5E |
| C1994 | 2C | 5E |
| C1995 | 1A | 2F |
| C1996 | 1A | 2F |
| C1997 | 1A | 2F |
| CR1963 | 3B | 4E |
| CR1971 | 4B | 3F |
| CR1972 | 2B | 4E |
| CR1974 | 4C | 3E |
| CR1991 | 2D | 4F |
| CR1992 | 3C | 3F |
| CR1992 | 3C | 3F |
| CR1993 | 2E | 4F |
| CR1994 | 3E | 4F |
| CR1998 | 4C | 2F |
| L1995 | 1A | 2F |
| L1996 | 1A | 1F |
| L1997 | 1A | 2F |
| P1904 | 1A | 1F |
| P1909 | 2C | 1G |
| P1909 | 4D | 1G |
| Q1956 | 3B | 4D |
| Q1970 | 2C | 4E |
| Q1974 | 4C | 2E |
| Q1978 | 4C | 2F |
| Q1980 | 4C | 2E |
| Q1982 | 4C | 2E |
| Q1994 | 3D | 5G |
| Q1995 | 3D | 5F |
| Q1998 | 4C | 2F |
| Q1999 | 5D | 1F |
| R1950 | 3A | 1E |
| R1951 | 3A | 1E |
| R1952 | 3A | 4E |
| R1953 | 3A | 1E |
| R1954 | 3B | 3E |
| R1955 | 3B | 2E |
| R1956 | 3B | 3D |
| R1957 | 3B | 4E |
| R1958 | 3B | 2E |
| R1959 | 4A | 4E |
| R1960 | 4A | 3E |
| R1961 | 4B | 3E |
| R1962 | 4B | 3E |
| R1963 | 3B | 4E |
| R1964 | 3B | 4E |
| R1965 | 3B | 4E |
| R1966 | 3B | 4E |
| R1967 | 2B | 5E |
| R1968 | 2B | 5E |
| R1969 | 2C | 5E |
| R1970 | 2C | 5E |
| R1971 | 4C | 3E |
| R1972 | 2B | 5E |
| R1973 | 2B | 4E |
| R1974 | 4C | 3E |
| R1975 | 2B | 3E |
| R1976 | 2B | 5E |
| R1977 | 2B | 4E |
| R1979 | 3C | 4F |
| R1980 | 4C | 1E |

*Partial A1 also shown on diagrams 2 and 7.*

## ASSEMBLY A21

| CIRCUIT NUMBER | SCHEM LOCATION | BOARD LOCATION |
|---|---|---|
| C1601 | 1E | 4A |
| C1605 | 2E | 3A |
| C1611 | 1E | 4A |
| C1615 | 1E | 3A |
| C1619 | 2G | 2B |
| C1623 | 1G | 2C |
| C1628 | 1H | 2D |
| C1635 | 3F | 4B |
| C1636 | 3F | 4B |
| C1638 | 2F | 5D |
| C1642 | 4E | 2C |
| C1643 | 4E | 1B |
| C1644 | 3E | 3B |
| C1645 | 5E | 1B |
| C1646 | 4E | 1B |
| C1651 | 4F | 4C |
| C1653 | 4F | 5D |
| C1656 | 4F | 3C |
| C1660 | 5G | 4C |
| C1663 | 3F | 4C |
| C1664 | 3G | 4D |
| C1665 | 4G | 3C |
| C1671 | 3H | 3D |
| C1672 | 3G | 4D |
| C1675 | 4G | 3C |
| C1676 | 3G | 4D |
| C1677 | 4G | 2D |
| CR1600 | 2F | 3B |
| CR1607 | 2F | 2C |
| CR1608 | 2E | 4A |
| CR1609 | 2F | 3C |
| CR1618 | 1E | 4A |
| CR1623 | 1G | 2C |
| CR1624 | 1E | 3A |
| CR1649 | 4F | 4D |
| CR1665 | 4G | 3C |
| CR1666 | 4G | 3C |
| CR1675 | 4G | 4D |
| CR1676 | 3G | 3D |
| CR1677 | 4G | 3D |
| CR1678 | 4G | 4D |
| J1606 | 1E | 5B |
| J1632 | 1E | 5A |
| L1627 | 1F | 3B |
| L1643 | 4E | 1A |
| L1645 | 5E | 1A |
| LR1644 | 4E | 1A |
| P1605 | 3E | 1A |
| Q1603 | 2F | 3B |
| Q1607 | 2F | 2C |
| Q1608 | 1E | 4B |
| Q1617 | 2G | 2B |
| Q1618 | 1E | 4A |
| Q1620 | 2G | 1B |
| Q1626 | 1F | 3B |
| Q1629 | 1G | 2C |
| Q1632 | 3F | 4B |
| Q1644 | 3E | 2B |
| Q1648 | 3F | 4B |
| Q1652 | 3F | 4B |
| Q1658 | 4F | 4C |
| Q1664 | 3G | 4C |
| Q1666 | 4G | 3C |
| Q1668 | 4G | 3C |
| Q1672 | 3G | 4E |
| Q1676 | 3G | 3D |
| R1600 | 2F | 3B |
| R1601 | 1E | 4A |
| R1602 | 1E | 4B |
| R1603 | 2F | 3B |
| R1604 | 2E | 3A |
| R1605 | 2E | 3A |
| R1606 | 2F | 3B |
| R1607 | 2F | 2C |
| R1608 | 2F | 2B |
| R1610 | 2G | 3B |
| R1611 | 1E | 4A |
| R1612 | 1E | 4A |
| R1613 | 1E | 4A |
| R1614 | 1E | 3A |
| R1615 | 1E | 3A |
| R1616 | 1E | 3A |
| R1617 | 2G | 3B |
| R1618 | 2G | 2B |
| R1619 | 2G | 2B |
| R1620 | 2G | 2B |
| R1621 | 1G | 1C |
| R1622 | 1G | 1C |
| R1623 | 1G | 2C |
| R1624 | 1E | 3A |
| R1625 | 1E | 3A |
| R1626 | 1E | 3B |
| R1627 | 1F | 3B |

*Partial A21 also shown on diagram 13.*

## CHASSIS MOUNTED PARTS

| CIRCUIT NUMBER | SCHEM LOCATION | BOARD LOCATION |
|---|---|---|
| DS1970 | 3C | CHASSIS |
| DS1994 | 3E | CHASSIS |
| J1989 | 5D | CHASSIS |
| S1988 | 4D | CHASSIS |

http://manoman.sqhill.com

## VOLTAGE AND WAVEFORM CONDITIONS

**Voltage Conditions:** Use a digital voltmeter with 10 MΩ input impedance, such as the TEKTRONIX DM 501A Digital Multimeter installed in a TM 500- or TM 5000-series power module, or a TEKTRONIX 7D13A Digital Multimeter installed in a readout-equipped 7000-series oscilloscope.

The voltages shown on the diagram were obtained with all R7103 front-panel variable controls, except INTENSITY and READOUT INTENSITY, set to midrange (INTENSITY and READOUT INTENSITY were set fully counterclockwise). Other R7103 front-panel controls were set as follows:

VERTICAL MODE .....LEFT
TRIGGER SOURCE .....VERT MODE

**Waveform Conditions:** The waveforms shown below were obtained with a test oscilloscope with 1 MΩ input impedance and bandwidth of at least 60 MHz (a TEKTRONIX 7904 Oscilloscope, 7B10 Time Base, and 7A13 Differential Comparator with a P6053 10X Probe, in this case). A 7B-series time base was installed in the R7103 HORIZ plug-in compartment; the time base was set to free run at 5 μs/div. The INTENSITY control was turned clockwise until the LIMITED VIEWING TIME indicator was lit.

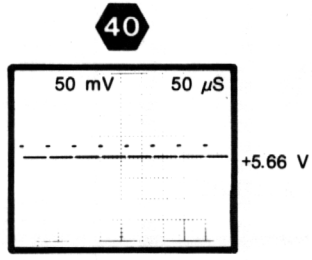


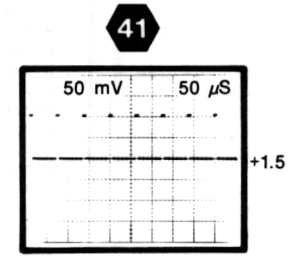


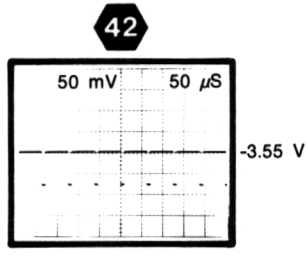


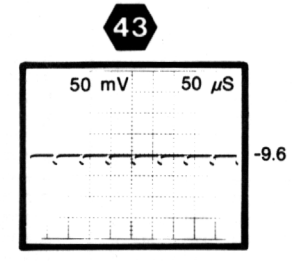


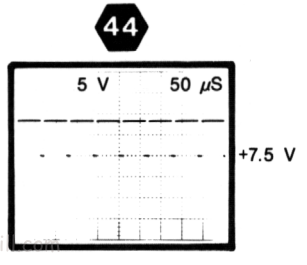


http://manoman.sqhi.com

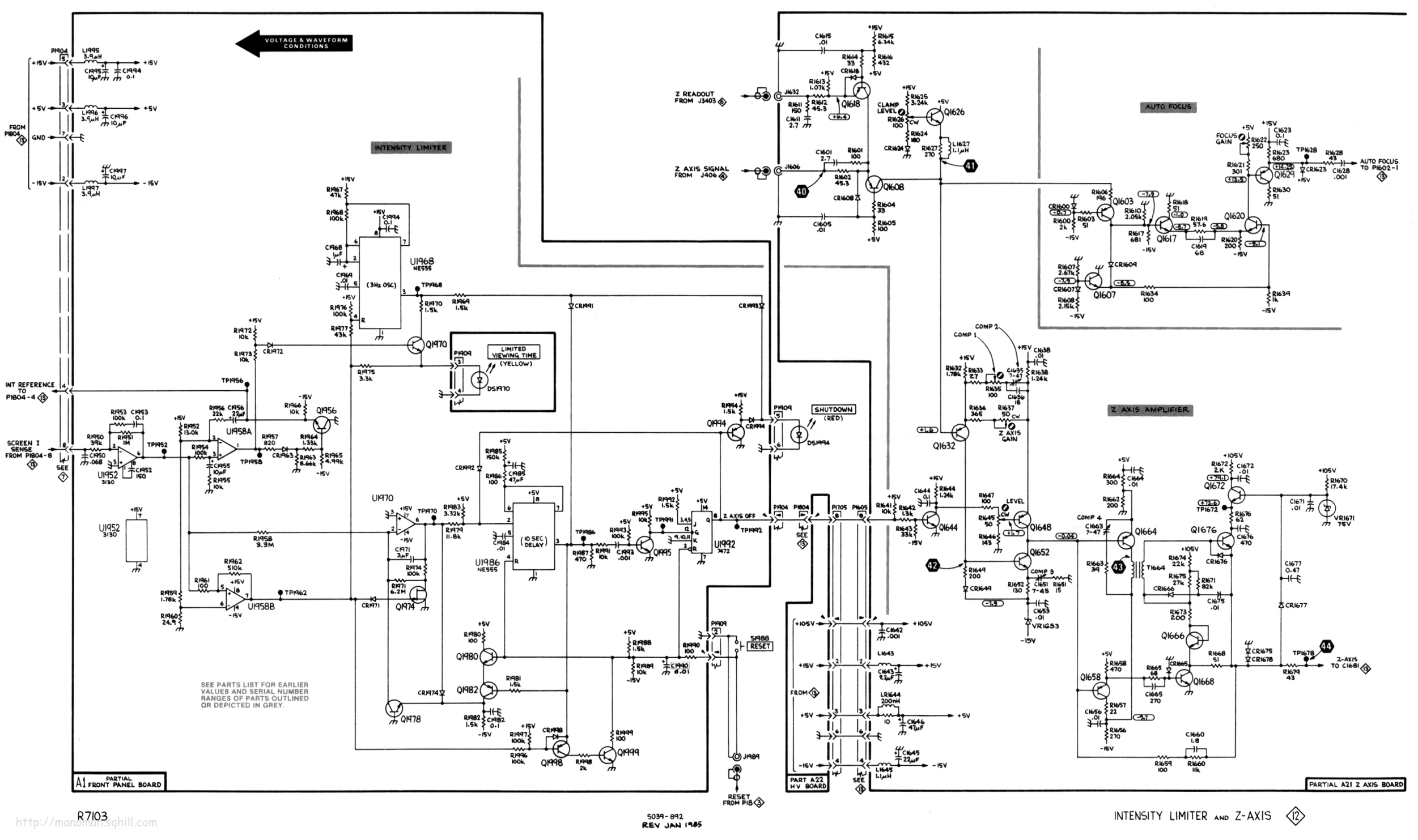


R7103

5039-892
REV JAN 1985

INTENSITY LIMITER AND Z-AXIS 12

http://manohan.sqhill.com

# CRT CIRCUIT DIAGRAM 13

## ASSEMBLY A5

| CIRCUIT NUMBER | SCHEM LOCATION | BOARD LOCATION | CIRCUIT NUMBER | SCHEM LOCATION | BOARD LOCATION | CIRCUIT NUMBER | SCHEM LOCATION | BOARD LOCATION | CIRCUIT NUMBER | SCHEM LOCATION | BOARD LOCATION |
|---|---|---|---|---|---|---|---|---|---|---|---|
| R309 | 4C | 4B | R310 | 1H | 3A | R313 | 4H | 4B | S309 | 4C | 4A |

*Partial A5 also shown on diagram 2.*

## ASSEMBLY A21

| CIRCUIT NUMBER | SCHEM LOCATION | BOARD LOCATION | CIRCUIT NUMBER | SCHEM LOCATION | BOARD LOCATION | CIRCUIT NUMBER | SCHEM LOCATION | BOARD LOCATION | CIRCUIT NUMBER | SCHEM LOCATION | BOARD LOCATION | CIRCUIT NUMBER | SCHEM LOCATION | BOARD LOCATION |
|---|---|---|---|---|---|---|---|---|---|---|---|---|---|---|
| C1680 | 3E | 3D | CR1688 | 3F | 1D | P1603 | 2F | 3E | R1629 | 4F | 2E | R1688 | 3E | 2E |
| C1681 | 3E | 3D | | | | P1609 | 3E | 1E | R1680 | 3E | 3D | R1692 | 2E | 5D |
| C1687 | 3F | 1D | DS1682 | 3E | 2E | | | | R1682 | 3E | 2E | R1694 | 5E | 2E |
| C1692 | 2E | 4E | DS1687 | 3E | 2D | Q1687 | 3E | 1D | R1685 | 3F | 1D | | | |
| C1694 | 5E | 3D | | | | | | | R1687 | 3F | 1D | VR1688 | 3E | 1D |

*Partial A21 also shown on diagram 12.*

## ASSEMBLY A22

| CIRCUIT NUMBER | SCHEM LOCATION | BOARD LOCATION | CIRCUIT NUMBER | SCHEM LOCATION | BOARD LOCATION | CIRCUIT NUMBER | SCHEM LOCATION | BOARD LOCATION | CIRCUIT NUMBER | SCHEM LOCATION | BOARD LOCATION | CIRCUIT NUMBER | SCHEM LOCATION | BOARD LOCATION | CIRCUIT NUMBER | SCHEM LOCATION | BOARD LOCATION |
|---|---|---|---|---|---|---|---|---|---|---|---|---|---|---|---|---|---|
| C1707 | 2A | 4H | C1860 | 2G | 3J | DS1820 | 4D | 3B | R1750 | 4A | 3D | R1824 | 4E | 4A | R1890 | 3G | 2K |
| C1708 | 2A | 4J | C1862 | 2G | 3J | DS1842 | 5D | 2B | R1754 | 1B | 2E | R1825 | 4E | 3A | R1891 | 3G | 3K |
| C1710 | 2B | 2F | C1870 | 2G | 3J | DS1844 | 5D | 2B | R1755 | 1B | 2F | R1827 | 4E | 3A | R1893 | 4G | 1C |
| C1711 | 1B | 3G | C1872 | 3G | 3J | DS1846 | 5D | 3B | R1756 | 1B | 1E | R1828 | 4E | 3A | R1894 | 4G | 1D |
| C1712 | 2B | 2G | C1877 | 3H | 3H | DS1848 | 5E | 3B | R1757 | 1B | 1E | R1829 | 4E | 4A | R1895 | 4G | 1D |
| C1714 | 2B | 3J | C1880 | 2C | 1G | | | | R1758 | 1B | 1E | R1831 | 5C | 1A | R1896 | 4G | 1E |
| C1715 | 3B | 3J | C1890 | 3G | 3K | P1702 | 5F | 3A | R1764 | 4B | 2D | R1834 | 5D | 2A | R1897 | 4G | 1E |
| C1722 | 2B | 4H | C1893 | 4G | 1D | P1703 | 4G | 1C | R1770 | 4A | 3E | R1835 | 5D | 2A | | | |
| C1724 | 3B | 3H | | | | P1709 | 4E | 2B | R1771 | 4B | 3E | R1837 | 5D | 3A | RT1804 | 5C | 1B |
| C1732 | 3C | 3K | CR1707 | 2A | 4H | P1740 | 4A | 4E | R1772 | 5A | 4E | R1838 | 5D | 2B | | | |
| C1735 | 3B | 3K | CR1708 | 2A | 4H | P1819 | 1F | 1G | R1774 | 4B | 3E | R1839 | 5D | 3A | T1708 | 2B | 3G |
| C1736 | 2C | 3K | CR1710 | 2B | 3F | | | | R1776 | 4B | 3E | R1840 | 5D | 3A | T1770 | 4A | 3E |
| C1747 | 3C | 2C | CR1711 | 2B | 2F | Q1708 | 2A | 4J | R1778 | 4B | 2C | R1841 | 5D | 3B | | | |
| C1749 | 3D | 2C | CR1714 | 2B | 3J | Q1724 | 2B | 3H | R1783 | 4B | 1B | R1842 | 5D | 3B | TP1707 | 2A | 4H |
| C1750 | 4A | 2D | CR1715 | 2B | 3J | Q1742 | 2C | 4K | R1784 | 4B | 1C | R1848 | 5E | 3B | TP1726 | 2E | 2G |
| C1752 | 1A | 2D | CR1724 | 3C | 3H | Q1748 | 3C | 4J | R1785 | 4B | 1C | R1849 | 4E | 1A | TP1736 | 2C | 4K |
| C1754 | 1B | 1E | CR1736 | 2C | 3K | Q1784 | 4B | 1C | R1788 | 4C | 3D | R1850 | 2G | 2J | TP1754 | 1B | 2E |
| C1755 | 1B | 1E | CR1747 | 3D | 2C | Q1835 | 5D | 2A | R1789 | 4D | 3D | R1852 | 2G | 2J | TP1756 | 5A | 1F |
| C1756 | 1B | 1F | CR1749 | 3D | 2C | Q1838 | 5D | 2B | R1790 | 2D | 1D | R1853 | 2G | 1J | TP1757 | 1B | 1E |
| C1764 | 3B | 1D | CR1752 | 1A | 2E | Q1842 | 5D | 2B | R1791 | 2D | 1C | R1854 | 2G | 1K | TP1775 | 1B | 2F |
| C1770 | 4A | 3F | CR1753 | 1B | 2E | | | | R1792 | 3D | 3B | R1855 | 2G | 2K | TP1784 | 4B | 2C |
| C1772 | 5A | 4E | CR1762 | 4A | 2D | R1706 | 2B | 4J | R1793 | 2D | 1G | R1856 | 2G | 2J | TP1796 | 1E | 1G |
| C1774 | 4B | 4F | CR1763 | 3B | 2D | R1708 | 2A | 3J | R1794 | 3D | 3B | R1857 | 2G | 3H | TP1797 | 1E | 1G |
| C1775 | 5A | 3E | CR1771 | 4B | 3E | R1709 | 2A | 3J | R1795 | 3E | 2B | R1858 | 2G | 3H | TP1806 | 5C | 1A |
| C1776 | 4B | 3E | CR1772 | 4B | 3E | R1712 | 2B | 3H | R1796 | 1E | 2B | R1859 | 2G | 3H | TP1813 | 3G | 3K |
| C1778 | 4B | 2E | CR1774 | 4A | 3E | R1713 | 2B | 4J | R1797 | 1E | 1G | R1860 | 2G | 2J | TP1844 | 3B | 2B |
| C1783 | 4B | 1B | CR1775 | 4A | 3E | R1714 | 2B | 3J | R1800 | 5C | 1A | R1862 | 2G | 2J | TP1846 | 4D | 2B |
| C1785 | 4B | 1C | CR1775 | 4B | 3E | R1716 | 2B | 2G | R1802A | 4C | 2A | R1863 | 2H | 1J | TP1850 | 2G | 3K |
| C1786 | 4B | 2C | CR1776 | 4B | 3E | R1717 | 2B | 2G | R1802B | 5C | 2A | R1864 | 2G | 1J | TP1852 | 2G | 2J |
| C1791 | 2D | 1E | CR1778 | 4B | 3E | R1718 | 2B | 3G | R1802C | 5C | 2A | R1865 | 2H | 2J | TP1860 | 2G | 3J |
| C1792 | 3D | 2C | CR1788 | 4C | 1B | R1719 | 2B | 4H | R1803 | 5C | 1B | R1866 | 2H | 2J | TP1862 | 2G | 2J |
| C1793 | 3D | 3C | CR1789 | 5C | 1B | R1720 | 2B | 4J | R1804 | 5C | 1B | R1867 | 2G | 2H | TP1870 | 2G | 3J |
| C1796 | 1E | 1G | CR1792 | 3D | 2C | R1722 | 2B | 4H | R1805 | 4D | 1B | R1870 | 2G | 2J | TP1872 | 3G | 2J |
| C1797 | 1E | 1G | CR1794 | 3D | 3B | R1724 | 2B | 4H | R1806 | 4D | 1B | R1872 | 3G | 2J | | | |
| C1803 | 3B | 1A | CR1803 | 4C | 1A | R1725 | 2B | 2G | R1807 | 5D | 1A | R1873 | 2H | 1H | U1700 | 1A | 4G |
| C1807 | 4D | 1A | CR1804 | 4C | 1A | R1726 | 2B | 2G | R1811 | 4D | 3D | R1874 | 2H | 1H | U1714A | 2B | 3H |
| C1818 | 4D | 3C | CR1816 | 4D | 3C | R1732 | 2C | 3K | R1812 | 4D | 3D | R1875 | 2H | 2J | U1714B | 2B | 3H |
| C1819 | 4D | 3C | CR1818 | 4D | 3B | R1733 | 2C | 3K | R1813 | 4D | 3D | R1876 | 3H | 2H | U1714 | 3B | 3H |
| C1820 | 4D | 4B | CR1819 | 4D | 3B | R1734 | 2C | 3K | R1814 | 4D | 3C | R1877 | 3H | 2B | U1736 | 2C | 3K |
| C1821 | 4D | 4C | CR1820 | 4D | 4C | R1735 | 2C | 3K | R1815 | 4E | 3B | R1880 | 2C | 2G | U1736 | 3B | 3K |
| C1831 | 5C | 2A | CR1835 | 5D | 2A | R1736 | 2C | 4K | R1816 | 4D | 3C | R1881 | 3G | 3K | U1802 | 3B | 1B |
| C1834 | 5D | 2A | CR1838 | 5D | 3B | R1738 | 2C | 4K | R1817 | 4D | 3B | R1882 | 1B | 2F | U1802 | 4C | 1B |
| C1839 | 5D | 2B | CR1842 | 5D | 2B | R1741 | 2D | 4K | R1818 | 4D | 3B | R1883 | 2B | 1F | | | |
| C1842 | 5D | 3B | | | | R1742 | 2D | 4K | R1819 | 4D | 3B | R1884 | 2B | 1F | VR1784 | 4B | 1C |
| C1846 | 5D | 2B | DS1792 | 3E | 2B | R1743 | 3C | 4K | R1820 | 4D | 4C | R1885 | 2B | 1F | | | |
| C1849 | 5E | 2B | DS1794 | 3E | 2B | R1746 | 3C | 3J | R1821 | 4D | 4C | R1886 | 2B | 1F | | | |
| C1850 | 2G | 3J | DS1818 | 4D | 3B | R1747 | 3C | 4K | R1822 | 4E | 4A | R1887 | 2B | 1G | | | |
| C1852 | 2G | 3J | DS1819 | 4D | 3B | R1748 | 3D | 2C | R1823 | 4E | 4A | R1888 | 3G | 3K | | | |

## CHASSIS MOUNTED PARTS

| CIRCUIT NUMBER | SCHEM LOCATION | BOARD LOCATION | CIRCUIT NUMBER | SCHEM LOCATION | BOARD LOCATION | CIRCUIT NUMBER | SCHEM LOCATION | BOARD LOCATION | CIRCUIT NUMBER | SCHEM LOCATION | BOARD LOCATION | CIRCUIT NUMBER | SCHEM LOCATION | BOARD LOCATION | CIRCUIT NUMBER | SCHEM LOCATION | BOARD LOCATION |
|---|---|---|---|---|---|---|---|---|---|---|---|---|---|---|---|---|---|
| P85 | 2D | CHASSIS | P1603 | 2F | CHASSIS | P1702 | 5F | CHASSIS | P1709 | E3 | CHASSIS | P1804 | 1A | CHASSIS | P1813 | 3G | CHASSIS |
| P89 | 2C | CHASSIS | P1605 | 2E | CHASSIS | P1703 | 4G | CHASSIS | P1740 | 4A | CHASSIS | P1806 | 2A | CHASSIS | P2006 | 4D | CHASSIS |
| P1602 | 3F | CHASSIS | P1609 | E3 | CHASSIS | P1705 | 2E | CHASSIS | P1785 | 2A | CHASSIS | P1810 | 2G | CHASSIS | | | |

http://manoman.sqhill.com

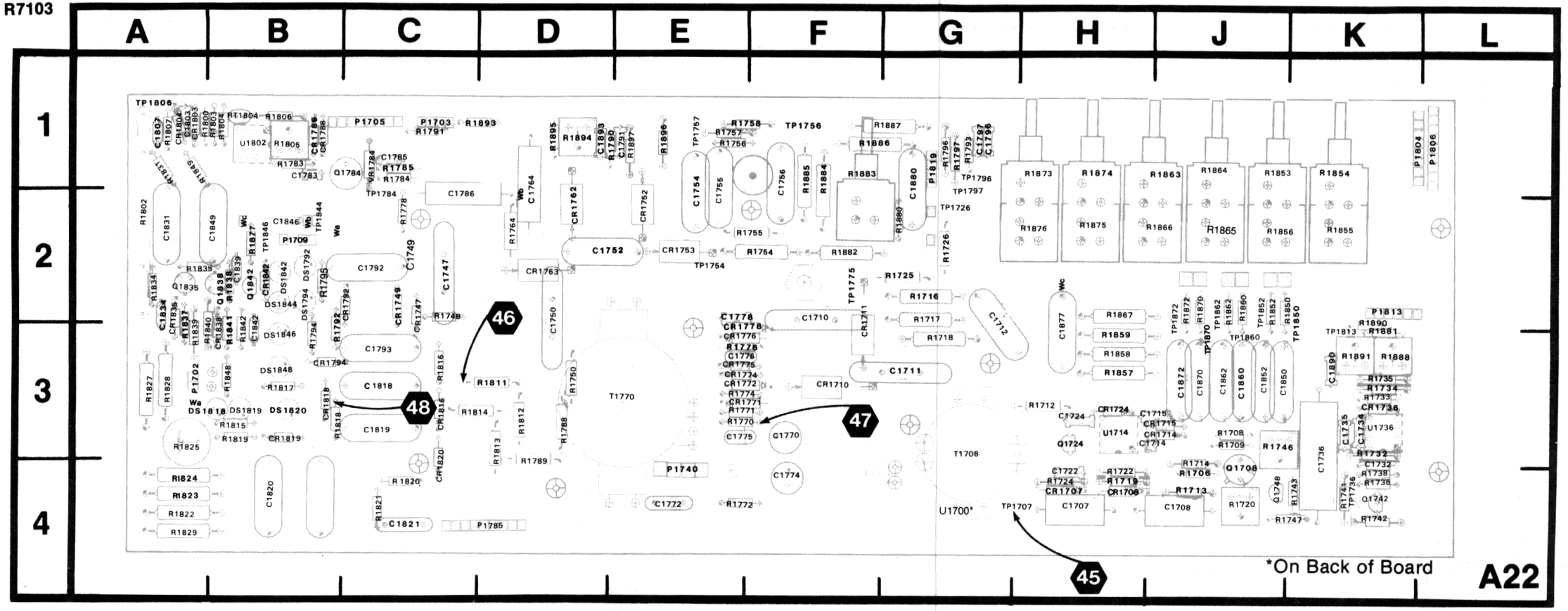


**Figure 8-14. A22—High-Voltage Board assembly.**

5039-814

http://manoman.sqhill.com

## VOLTAGE AND WAVEFORM CONDITIONS

**Voltage Conditions:** Use a digital voltmeter with 10 MΩ input impedance, such as the TEKTRONIX DM 501A Digital Multimeter installed in a TM 500- or TM 5000-series power module, or a TEKTRONIX 7D13A Digital Multimeter installed in a readout-equipped 7000-series oscilloscope, and a TEKTRONIX P6013A, 12 kV, 1000X Probe, Tektronix Part 010-0117-01.

The voltages shown on the diagram were obtained with all R7103 front-panel variable controls, except INTENSITY, set at midrange (INTENSITY was set fully counterclockwise). Other front-panel controls were set as follows:

VERTICAL MODE .....LEFT
TRIGGER SOURCE .....VERT MODE

No plug-in units were installed in the R7103.

**Waveform Conditions:** The waveforms shown below were obtained with a test oscilloscope with 1 MΩ input impedance and bandwidth of at least 60 MHz (a TEKTRONIX 7904 Oscilloscope, 7B10 Time Base, and 7A13 Differential Comparator with a P6053 10X Probe, in this case).

No plug-in units were installed in the R7103.

45

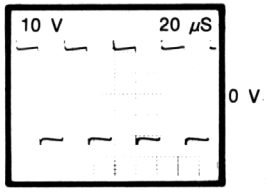


46

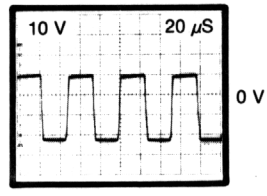


47

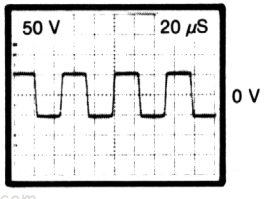


48

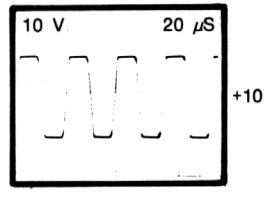


http://manoman.sqhill.com

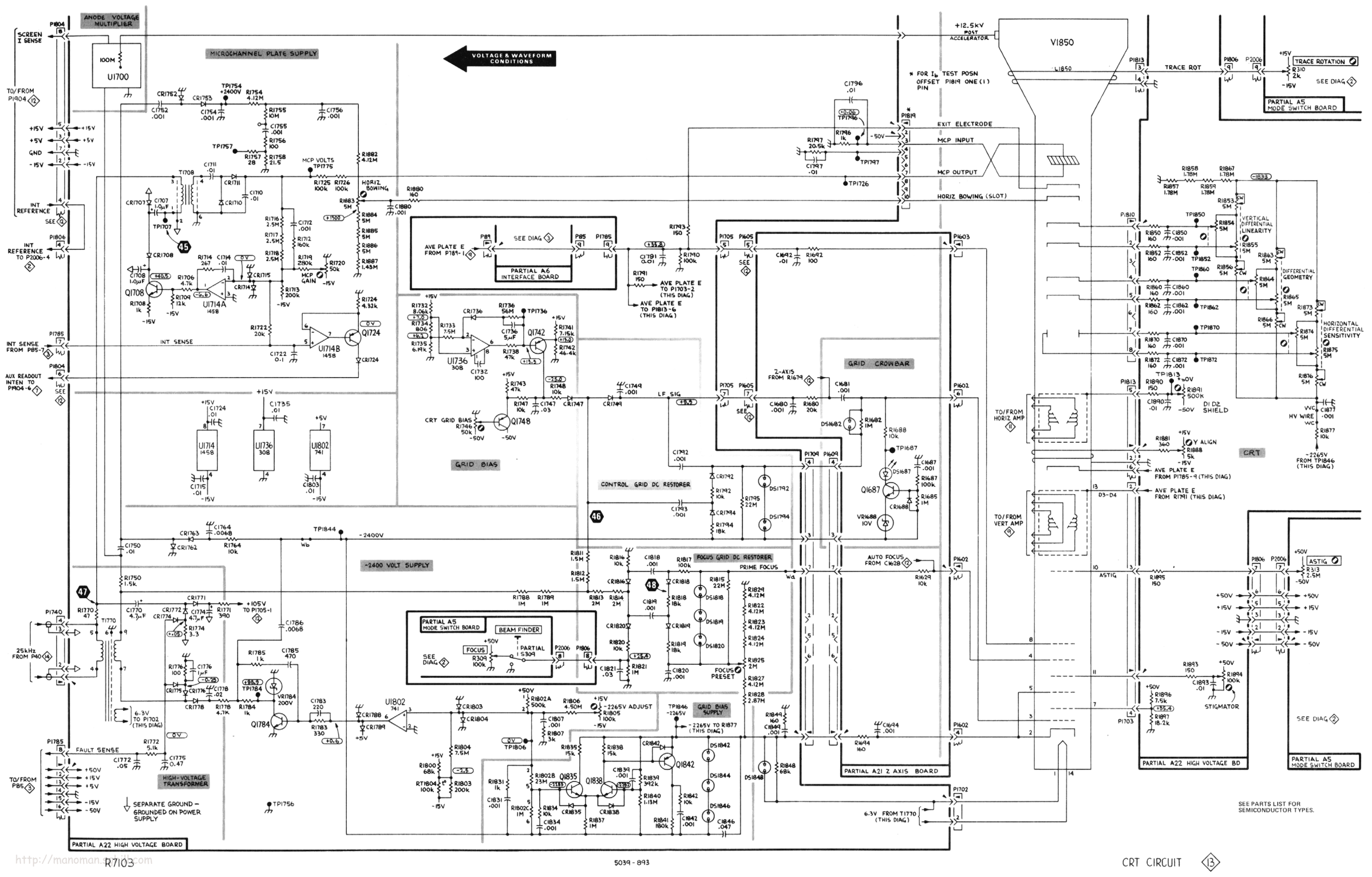




http://manoman.tistory.com

# CONVERTER/RECTIFIERS DIAGRAM 14

## ASSEMBLY A23

| CIRCUIT NUMBER | SCHEM LOCATION | BOARD LOCATION |
|---|---|---|
| C5 | 2A | 3A |
| C6* | 2A | 3B |
| C16 | 1B | 4B |
| C17 | 1B | 2B |
| C19 | 1B | 2A |
| C27 | 1B | 4D |
| C28 | 1B | 4D |
| C29 | 1C | 3E |
| C31 | 1C | 3F |
| C35 | 2D | 1E |
| C36 | 2D | 3D |
| C38 | 2C | 2H |
| C39 | 2C | 4G |
| C42 | 2C | 2D |
| C43 | 2D | 1D |
| CR15 | 1A | 4C |
| CR32 | 1C | 3D |
| CR33 | 1C | 3E |
| CR34 | 1C | 4E |
| CR36 | 2B | 1G |
| CR37 | 2B | 1G |
| CR38 | 1D | 3F |
| CR39 | 1C | 4G |
| CR40 | 1C | 4H |
| CR41 | 1C | 4G |
| CR45 | 1D | 2D |
| CR46 | 2C | 3G |
| CR49 | 1C | 1F |
| DS19 | 1B | 1C |
| E8 | 1B | 3B |
| E13 | 1A | 4A |
| L24 | 1B | 3E |
| Q30 | 2C | 2F |
| Q34 | 1C | 5E |
| Q40 | 1C | 5G |
| Q43 | 1D | 1E |
| Q45 | 1D | 2E |
| Q46 | 2C | 3G |
| R5* | 2A | 3A |
| R8* | 2A | 3C |
| R9 | 2A | 2A |
| R10 | 2B | 2C |
| R12* | 1A | 4C |
| R13 | 1A | 4A |
| R19 | 1B | 2C |
| R21 | 1B | 3C |
| R25 | 1B | 3D |
| R31 | 1C | 3F |
| R32 | 1C | 3E |
| R36 | 2D | 4C |
| R37 | 1C | 4H |
| R38 | 2C | 2E |
| R39 | 1C | 4H |
| R40 | 1C | 4G |
| R41 | 2C | 3D |
| R42 | 1D | 2E |
| R43 | 2D | 2D |
| R44 | 1D | 2E |
| R45 | 1D | 2E |
| R46 | 1D | 2D |
| R47 | 1C | 3D |
| RT9 | 2A | 3C |
| RT13 | 1A | 4C |
| S12 | 1A | 5B |
| T8 | 2A | 2B |
| T25 | 1B | 4D |
| T30 | 1C | 1F |
| T35 | 2D | 2E |
| TP31 | 1C | 3F |
| TP34 | 1D | 4F |
| TP38 | 1C | 2F |
| TP46 | 2B | 4E |
| VR38 | 2C | 1F |
| VR45 | 2C | 3D |
| W5* | 2A | 3A |

## ASSEMBLY A24

| CIRCUIT NUMBER | SCHEM LOCATION | BOARD LOCATION |
|---|---|---|
| C52 | 3B | 5H |
| C54 | 3B | 5G |
| C55 | 3B | 4G |
| C64 | 3B | 5C |
| C66 | 4B | 5C |
| C67 | 4B | 5C |
| C70 | 3C | 5D |
| C71 | 3C | 5E |
| C74 | 4C | 4D |
| C77 | 3D | 4E |
| C78 | 3D | 4E |
| C80 | 4C | 5D |
| C86 | 4D | 4F |
| C90 | 4D | 5B |
| C92 | 4D | 2F |
| C94 | 4D | 4E |
| C121 | 1E | 4F |
| C124 | 1E | 3F |
| C125 | 1E | 3E |
| C132 | 2E | 2D |
| C133 | 2F | 1C |
| C134 | 2E | 3D |
| C135 | 2F | 1D |
| C142 | 2E | 2B |
| C143 | 2F | 1A |
| C144 | 2E | 2C |
| C145 | 2F | 2B |
| C152 | 3E | 3F |
| C153 | 3F | 2E |
| C154 | 3E | 1G |
| C155 | 3F | 2F |
| C156 | 3F | 1F |
| C172 | 3E | 4A |
| C179 | 3F | 4B |
| C183 | 3F | 5A |
| CR52 | 3B | 5G |
| CR59 | 3B | 5G |
| CR65 | 4B | 5A |
| CR66 | 4B | 5B |
| CR73 | 3D | 5E |
| CR74 | 3D | 5E |
| CR75 | 3D | 5E |
| CR76 | 3D | 5E |
| CR81 | 4C | 4F |
| CR82 | 4C | 4F |
| CR83 | 4C | 4F |
| CR84 | 4C | 4F |
| CR90 | 4C | 5G |
| CR120 | 1E | 3F |
| CR121 | 1E | 4E |
| CR122 | 1E | 3E |
| CR123 | 1E | 4E |
| CR124 | 1E | 3E |
| CR125 | 1E | 3E |
| CR127 | 1E | 4F |
| CR130 | 2E | 3E |
| CR131 | 2E | 2E |
| CR132 | 2E | 3E |
| CR133 | 2E | 2E |
| CR140 | 2E | 3D |
| CR141 | 2E | 3B |
| CR142 | 2E | 4D |
| CR143 | 2E | 4C |
| CR150 | 3E | 3F |
| CR151 | 3E | 3G |
| CR153 | 3E | 3F |
| CR161 | 3D | 5B |
| CR171 | 3E | 4B |
| CR183 | 3F | 5A |
| L132 | 2E | 2C |
| L134 | 2E | 2D |
| L142 | 2E | 2A |
| L144 | 2E | 2B |
| L152 | 3E | 2F |
| L154 | 3E | 2G |
| L156 | 3E | 1G |
| P40 | 1E | 2E |
| P48 | 1F | 1D |
| P50 | 3F | 1F |
| P52 | 2F | 1C |
| Q52 | 3B | 5G |
| Q54 | 3B | 5G |
| Q162 | 3D | 5B |
| Q171 | 4E | 4B |
| Q173 | 3E | 4B |
| Q177 | 4E | 4B |
| R52 | 3B | 4H |
| R54 | 3B | 5G |
| R55 | 3C | 4G |
| R59 | 3B | 5G |
| R60 | 3B | 5C |
| R61 | 3B | 5C |
| R62 | 3B | 5B |
| R63 | 3B | 5B |
| R64 | 4B | 5A |
| R66 | 4B | 5C |
| R67 | 4B | 5C |
| R70 | 3C | 5D |
| R71 | 3C | 4F |
| R74 | 4C | 5D |
| R80 | 4C | 4D |
| R81 | 4C | 5D |
| R82 | 4C | 5E |
| R83 | 4C | 4E |
| R84 | 4C | 4E |
| R86 | 4D | 4F |
| R87 | 4D | 4G |
| R88 | 4D | 3B |
| R90 | 4D | 5C |
| R92 | 4D | 5E |
| R93 | 4D | 5F |
| R94 | 4D | 5E |
| R95 | 4D | 5E |
| R120 | 1E | 3F |
| R121 | 1E | 4F |
| R127 | 1E | 5E |
| R161 | 3D | 5B |
| R162 | 3D | 5B |
| R170 | 5D | 2A |
| R171 | 4E | 4B |
| R172 | 3E | 4B |
| R173 | 3E | 4A |
| R174 | 3E | 4A |
| R176 | 4E | 5A |
| R177 | 3E | 4A |
| R179 | 3E | 4B |
| R181 | 3E | 4A |
| R182 | 3E | 4A |
| TP126 | 1F | 5F |
| U75 | 3C | 5C |
| U179A | 4E | 4B |
| U179B | 3F | 4B |
| U179C | 3E | 4B |
| VR52 | 3B | 5G |
| VR72 | 3C | 5E |
| VR88 | 4D | 3B |

## ASSEMBLY A25

| CIRCUIT NUMBER | SCHEM LOCATION | BOARD LOCATION |
|---|---|---|
| C8 | 4E | 5F |
| CR7 | 5E | 5F |
| CR8 | 5E | 5F |
| P72 | 4E | 5F |
| R1 | 4E | 6F |
| R2 | 4E | 6E |
| R3 | 4E | 5E |
| R4 | 4E | 5E |
| R5 | 4E | 6E |
| R8 | 4E | 5F |

*Partial A25 also shown on diagram 15.*

## CHASSIS MOUNTED PARTS

| CIRCUIT NUMBER | SCHEM LOCATION | BOARD LOCATION |
|---|---|---|
| C37 | 1D | CHASSIS |
| C179 | 3F | CHASSIS |
| F10 | 3A | CHASSIS |
| FL10 | 3A | CHASSIS |
| L37 | 1D | CHASSIS |
| P10 | 3A | CHASSIS |
| P11 | 3A | CHASSIS |
| S10 | 3A | CHASSIS |
| S72 | 4E | CHASSIS |
| T110 | 2D | CHASSIS |

***See Parts List for serial number ranges.**

http://manoman.sqhill.com

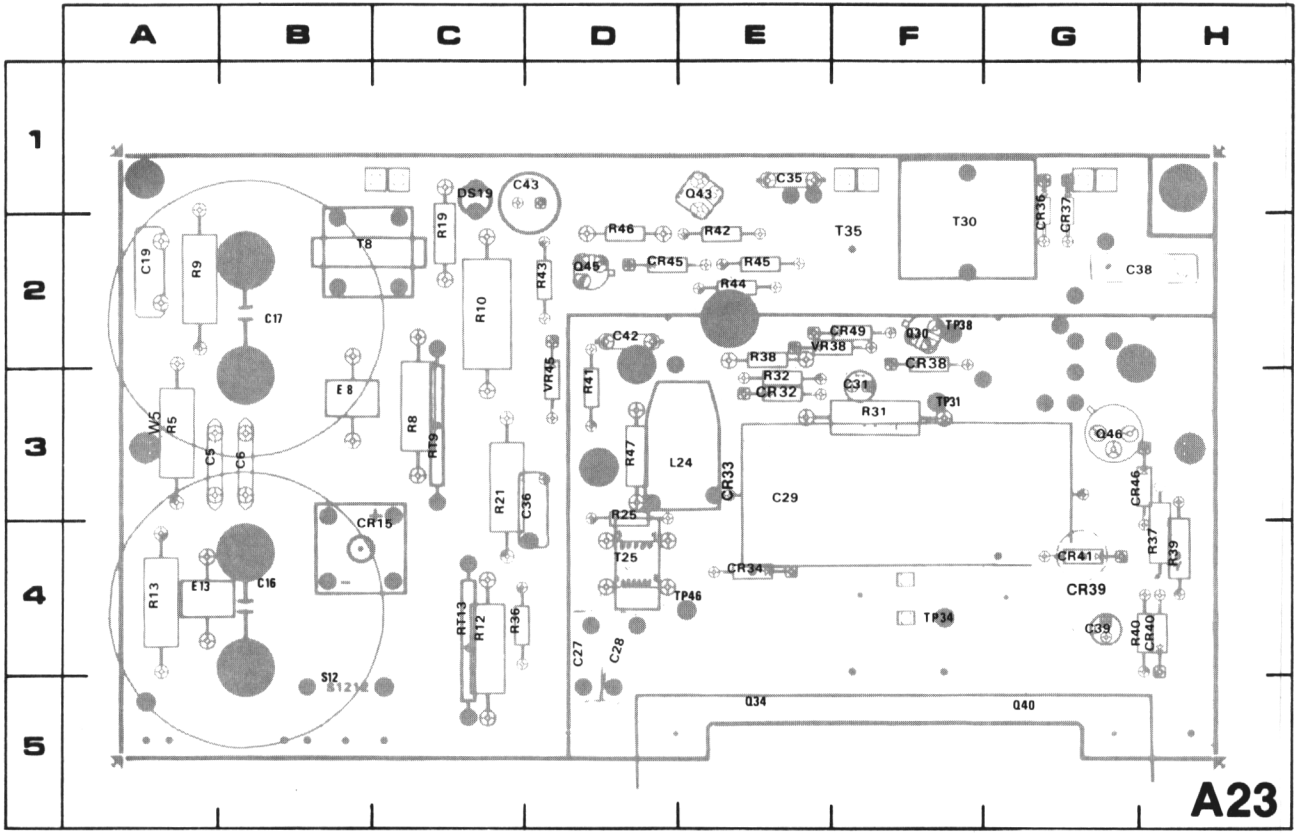


5039-815A

**Figure 8-15. A23—Inverter Board assembly.**

http://manoman.sqhill.com

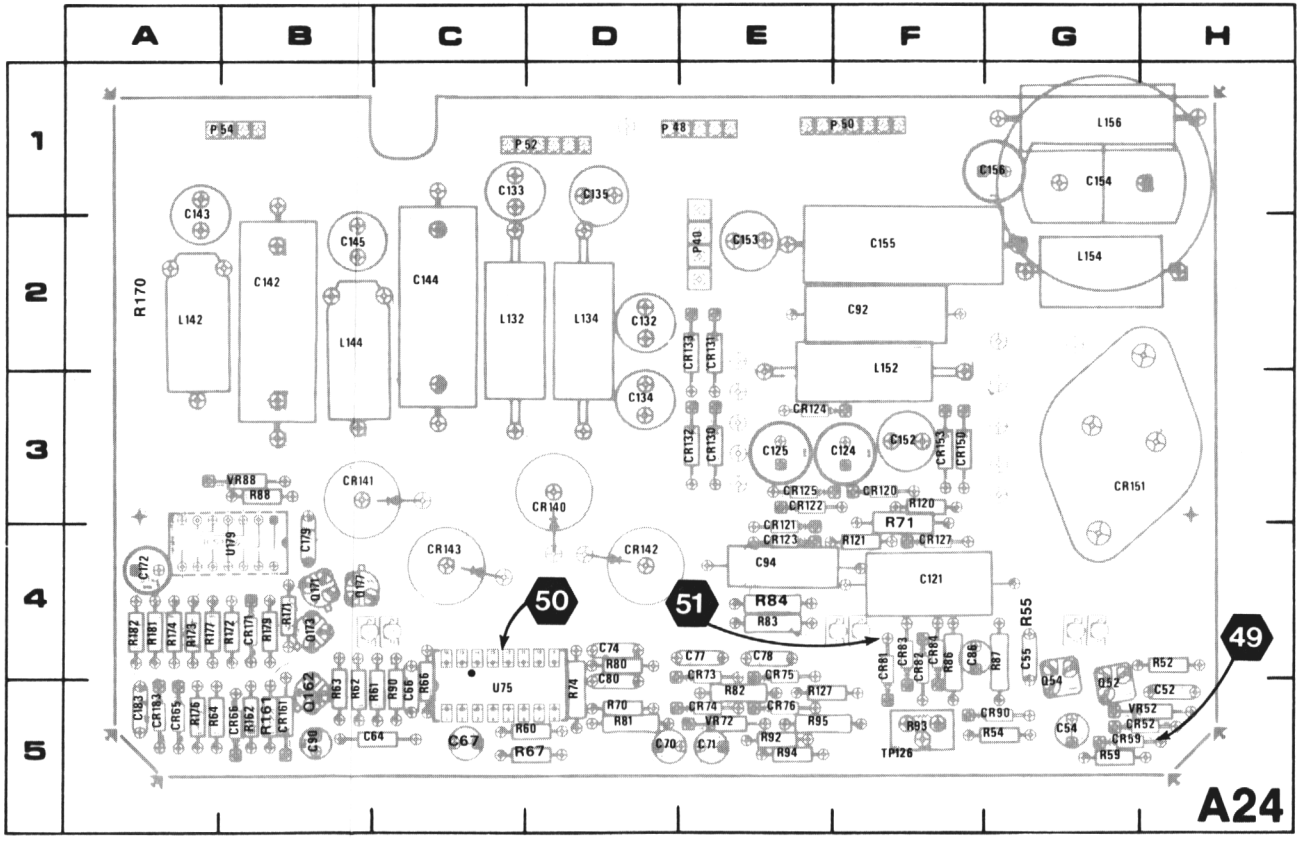


5039-816

**Figure 8-16. A24—Control Rectifier Board assembly.**

http://manoman.sqhill.com

## VOLTAGE AND WAVEFORM CONDITIONS

**Voltage Conditions:** Use a digital voltmeter with 10 MΩ input impedance, such as the TEKTRONIX DM 501A Digital Multimeter installed in a TM 500- or TM 5000-series power module, or a TEKTRONIX 7D13A Digital Multimeter installed in a readout-equipped 7000-series oscilloscope.

The voltages shown on the diagram were obtained with all R7103 front-panel variable controls, except INTENSITY, set at midrange (INTENSITY was set fully counterclockwise). Other front-panel controls were set as follows:

VERTICAL MODE .....LEFT
TRIGGER SOURCE .....VERT MODE

No plug-in units were installed in the R7103.

**Waveform Conditions:** The waveforms shown below were obtained with a test oscilloscope with 1 MΩ input impedance and bandwidth of at least 60 MHz (a TEKTRONIX 7904 Oscilloscope, 7B10 Time Base, and 7A13 Differential Comparator with a P6053 10X Probe, in this case).

No plug-in units were installed in the R7103.

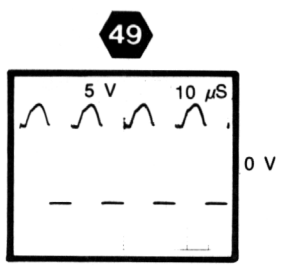


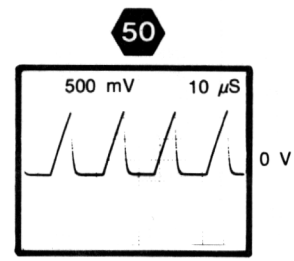


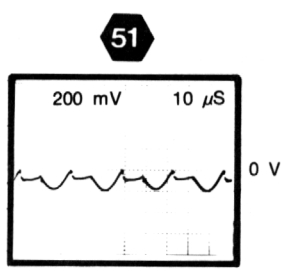


http://manoman.sqhill.com

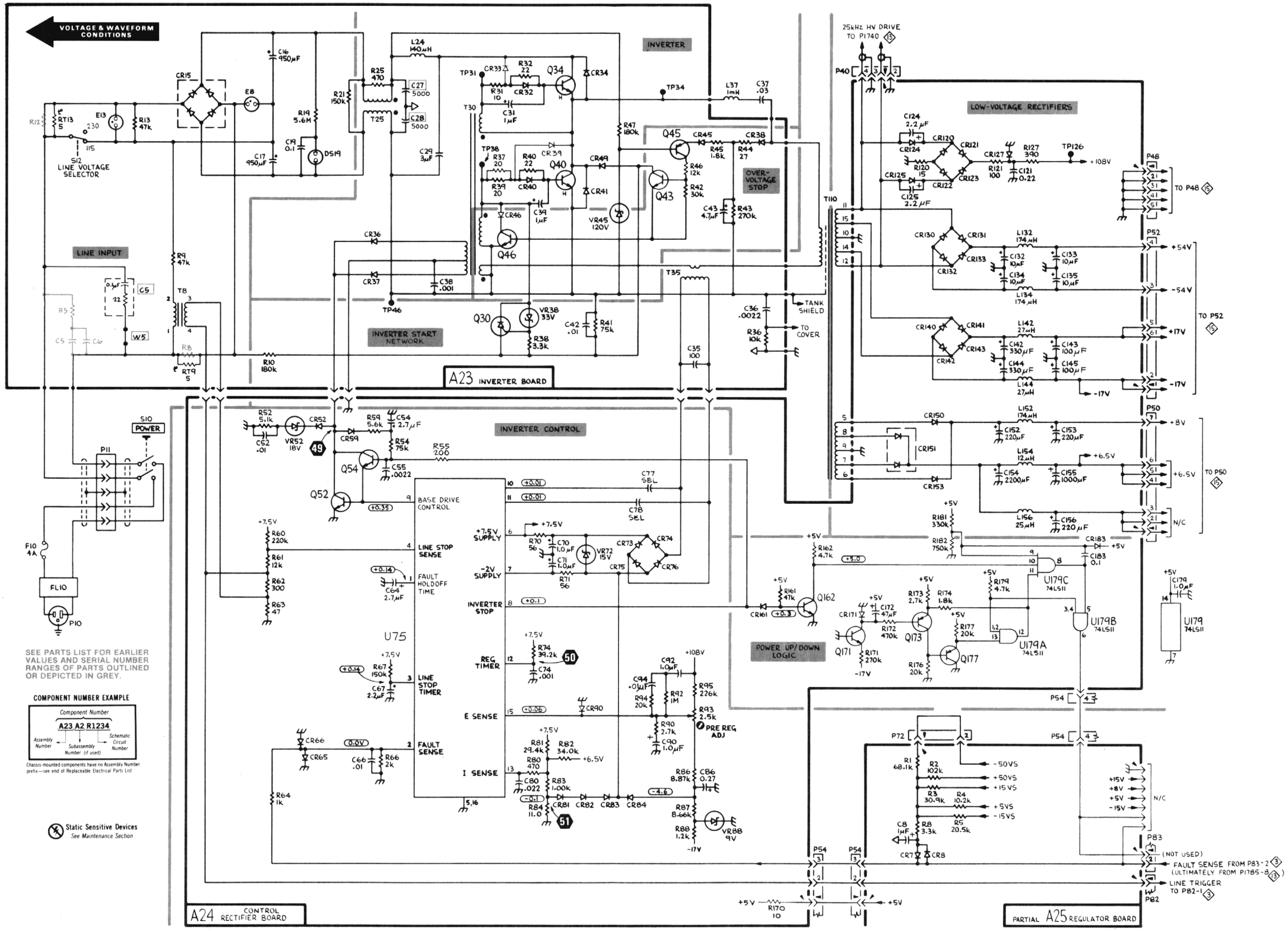


R7103

http://manoman.sqhill.com

# LOW-VOLTAGE REGULATORS DIAGRAM 15

## ASSEMBLY A25

| CIRCUIT NUMBER | SCHEM LOCATION | BOARD LOCATION |
|---|---|---|
| C12 | 1A | 4C |
| C13 | 2B | 6C |
| C15 | 1B | 3C |
| C17 | 1B | 3C |
| C24 | 1B | 2C |
| C36 | 2B | 4F |
| C44 | 2B | 4E |
| C45 | 2B | 4D |
| C47 | 3B | 2E |
| C54 | 3B | 2D |
| C64 | 1D | 3B |
| C68 | 1D | 2B |
| C69 | 1E | 3B |
| C84 | 2D | 3E |
| C88 | 2D | 2F |
| C114 | 3D | 2G |
| C156 | 2D | 3F |
| CR10 | 1A | 5D |
| CR11 | 1A | 4C |
| CR15 | 1B | 3C |
| CR19 | 1B | 3C |
| CR20 | 1B | 3C |
| CR21 | 1B | 3C |
| CR22 | 1B | 2C |
| CR28 | 1C | 4B |
| CR45 | 3B | 3D |
| CR49 | 3B | 2D |
| CR50 | 3B | 3D |
| CR51 | 3B | 3D |
| CR52 | 3B | 2D |
| CR58 | 3C | 5B |
| CR64 | 1D | 2B |
| CR76 | 1E | 5B |
| CR84 | 2D | 2E |
| CR96 | 2E | 5B |
| CR114 | 3D | 2G |
| CR132 | 3E | 5B |
| CR142 | 4D | 4G |
| CR143 | 4D | 4H |
| CR144 | 4D | 4F |
| CR148 | 4E | 5G |
| P17 | 4D | 5H |
| P48 | 3C | 5G |
| P50 | 4D | 2F |
| P62 | 4E | 5G |
| P80 | 3A | 5G |
| P90 | 3A | 5G |
| P99 | 3D | 5F |
| Q22 | 1B | 3C |
| Q28 | 1B | 1C |
| Q34 | 2A | 3D |
| Q38 | 2B | 4F |
| Q52 | 3B | 2D |
| Q58 | 3B | 1D |
| Q68 | 1D | 1B |
| Q74 | 1E | 1B |
| Q88 | 2D | 2E |
| Q94 | 2E | 1E |
| Q118 | 3D | 2G |
| Q122 | 3D | 1F |
| Q126 | 3E | 1G |
| Q144 | 4D | 5G |
| Q148 | 4E | 5G |
| R10 | 1A | 4D |
| R12 | 1A | 4C |
| R13 | 2B | 6C |
| R14 | 2A | 5C |
| R15 | 2A | 5C |
| R16 | 2B | 5C |
| R17 | 1B | 3C |
| R21 | 1B | 3C |
| R22 | 1B | 2C |
| R24 | 1B | 2C |
| R25 | 1B | 4C |
| R26 | 1B | 2C |
| R27 | 1B | 2C |
| R28 | 1B | 2C |
| R32 | 2A | 4D |
| R34 | 2A | 3D |
| R36 | 2B | 4F |
| R37 | 2B | 3F |
| R38 | 2B | 4F |
| R42 | 3A | 3E |
| R44 | 2B | 4E |
| R45 | 2A | 5C |
| R46 | 2B | 5C |
| R47 | 3B | 3D |
| R51 | 3B | 3D |
| R52 | 3B | 2D |
| R54 | 3B | 2D |
| R55 | 2B | 4D |
| R56 | 3B | 2E |
| R57 | 3B | 2D |
| R58 | 3B | 2D |
| R61 | 1D | 6B |
| R62 | 1D | 5B |
| R63 | 2D | 2B |
| R67 | 1D | 2B |
| R68 | 1D | 2B |
| R69 | 1E | 4B |
| R73 | 1E | 2B |
| R74 | 1E | 3B |
| R75 | 1E | 2B |
| R76 | 1E | 4B |
| R77 | 1E | 3B |
| R80 | 3D | 5D |
| R81 | 3D | 5C |
| R82 | 2D | 3E |
| R83 | 2D | 3E |
| R87 | 2D | 2E |
| R88 | 2D | 2E |
| R93 | 2E | 2E |
| R94 | 2E | 2F |
| R95 | 2E | 3E |
| R96 | 2E | 4E |
| R97 | 2E | 3E |
| R113 | 3D | 5D |
| R114 | 3D | 5D |
| R121 | 3D | 2F |
| R126 | 3E | 2G |
| R127 | 3E | 3G |
| R128 | 3E | 3G |
| R129 | 3E | 2G |
| R131 | 3D | 3G |
| R132 | 3E | 3G |
| R133 | 3E | 3G |
| R134 | 3E | 2H |
| R135 | 3E | 6F |
| R136 | 3E | 2G |
| R141 | 4D | 5H |
| R142 | 4D | 4H |
| R143 | 4D | 4H |
| R144 | 4D | 4H |
| R145 | 4D | 4H |
| R148 | 4E | 6G |
| R152 | 1D | 2F |
| R156 | 2D | 3F |
| U15 | 1A | 4C |
| U45 | 3A | 3D |
| U64A | 1D | 3B |
| U64B | 1E | 3B |
| U84A | 2E | 3E |
| U84B | 2D | 3E |
| U114A | 3D | 2G |
| U114B | 3E | 2G |
| VR10 | 1A | 4D |
| VR12 | 1A | 4D |
| VR17 | 1B | 3C |
| VR32 | 2A | 3D |
| VR36 | 2B | 4G |
| VR47 | 3B | 3D |
| VR152 | 2D | 3F |
| VR156 | 2D | 3F |

*Partial A25 also shown on diagram 14.*

## CHASSIS MOUNTED PARTS

| CIRCUIT NUMBER | SCHEM LOCATION | BOARD LOCATION |
|---|---|---|
| B90 | 3A | CHASSIS |
| R90 | 3A | CHASSIS |
| S99 | 3C | CHASSIS |

http://manoman.sqhill.com

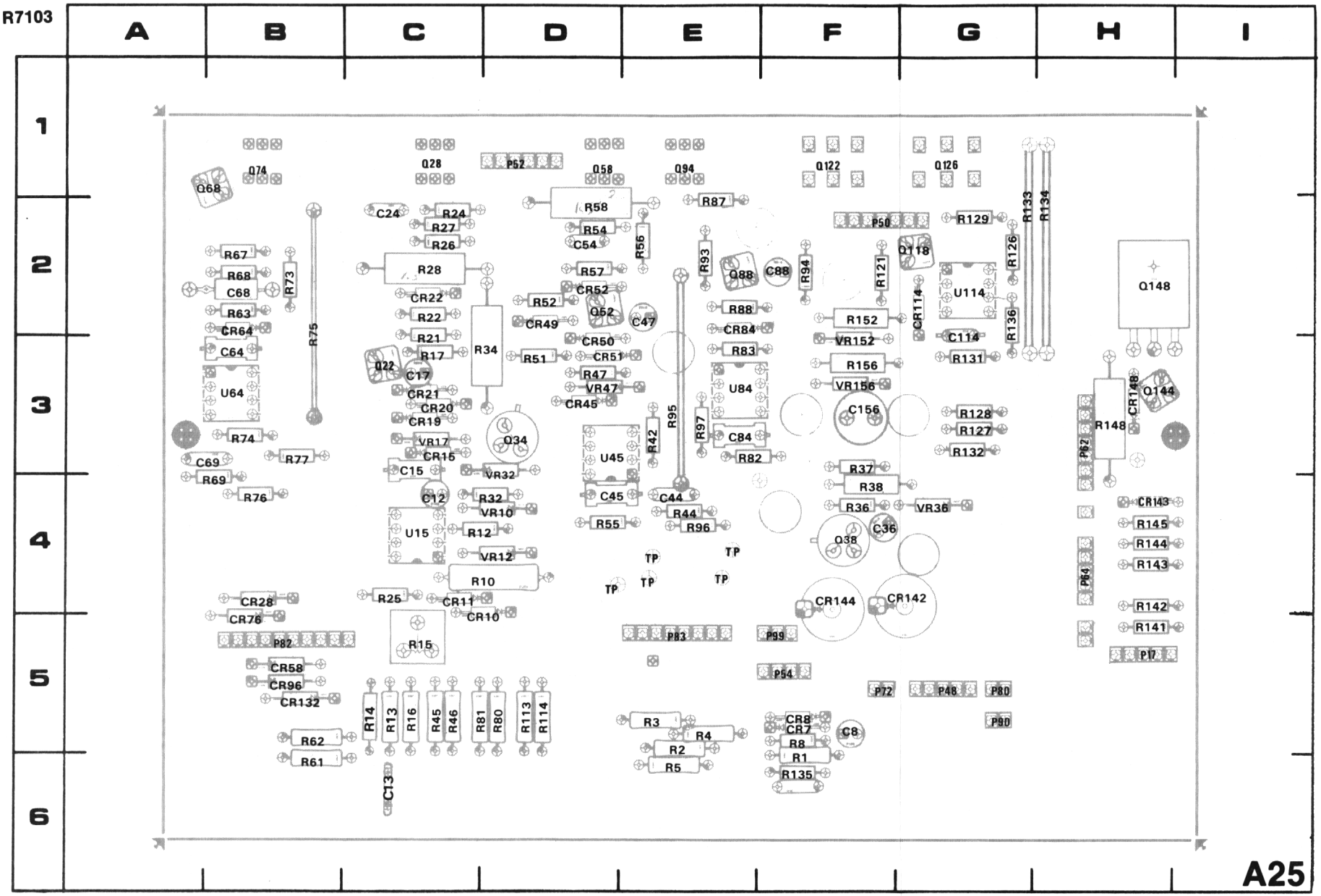


Figure 8-17. A25—Regulator Board assembly.

http://manoman.sqhill.com

## VOLTAGE CONDITIONS

**Voltage Conditions:** Use a digital voltmeter with 10 MΩ input impedance, such as the TEKTRONIX DM 501A Digital Multimeter installed in a TM 500- or TM 5000-series power module, or a TEKTRONIX 7D13A Digital Multimeter installed in a readout-equipped 7000-series oscilloscope.

The voltages shown on the diagram were obtained with all R7103 front-panel variable controls, except INTENSITY, set at midrange (INTENSITY was set fully counterclockwise). Other front-panel controls were set as follows:

VERTICAL MODE .....LEFT
TRIGGER SOURCE .....VERT MODE

No plug-in units were installed in the R7103.

http://manoman.sqhill.com

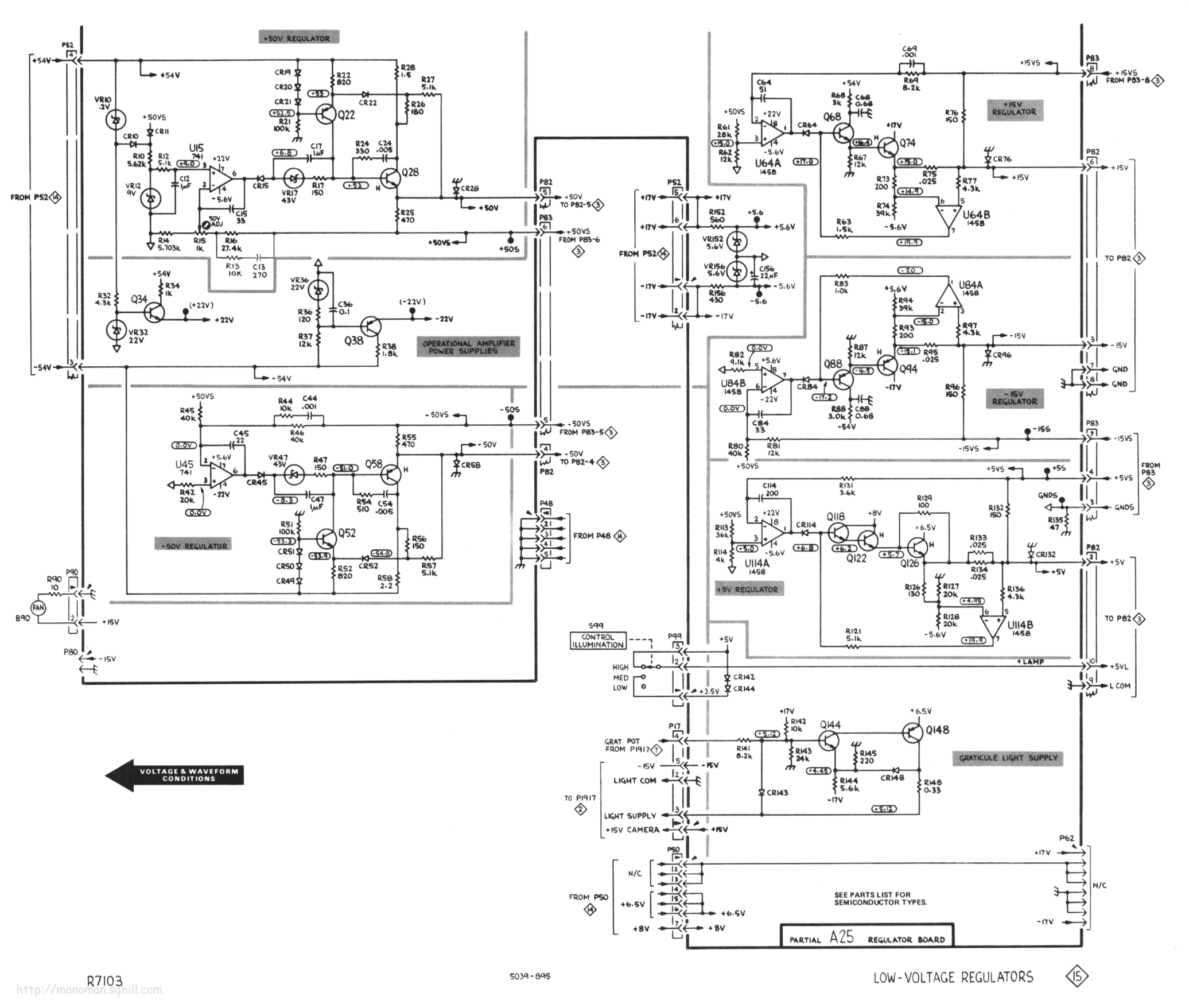
+50V REGULATOR
OPERATIONAL AMPLIFIER POWER SUPPLIES
-50V REGULATOR
+15V REGULATOR
- 15V REGULATOR
+5V REGULATOR
GRATICULE LIGHT SUPPLY
+LAMP
CONTROL ILLUMINATION
HIGH
MED
LOW
VOLTAGE & WAVEFORM CONDITIONS
SEE PARTS LIST FOR SEMICONDUCTOR TYPES.
PARTIAL A25 REGULATOR BOARD
LOW-VOLTAGE REGULATORS
15
R7103
5039-895
http://manoman.sqhill.com

# R7103 TROUBLESHOOTING CHART

**TROUBLESHOOTING CHART INSTRUCTIONS:**

1. **Beginning at the top left block of the chart proceed downward until the R7103 does not perform as indicated.**

2. **Then follow the dashed line as the symptom indicates. Each shaded block indicates a circuit which may be the cause of the malfunction. Refer to Section 3, Theory of Operation, for a detailed discussion of the circuit, and Section 8, Diagrams and Circuit Board Illustrations, for the circuit schematic.**

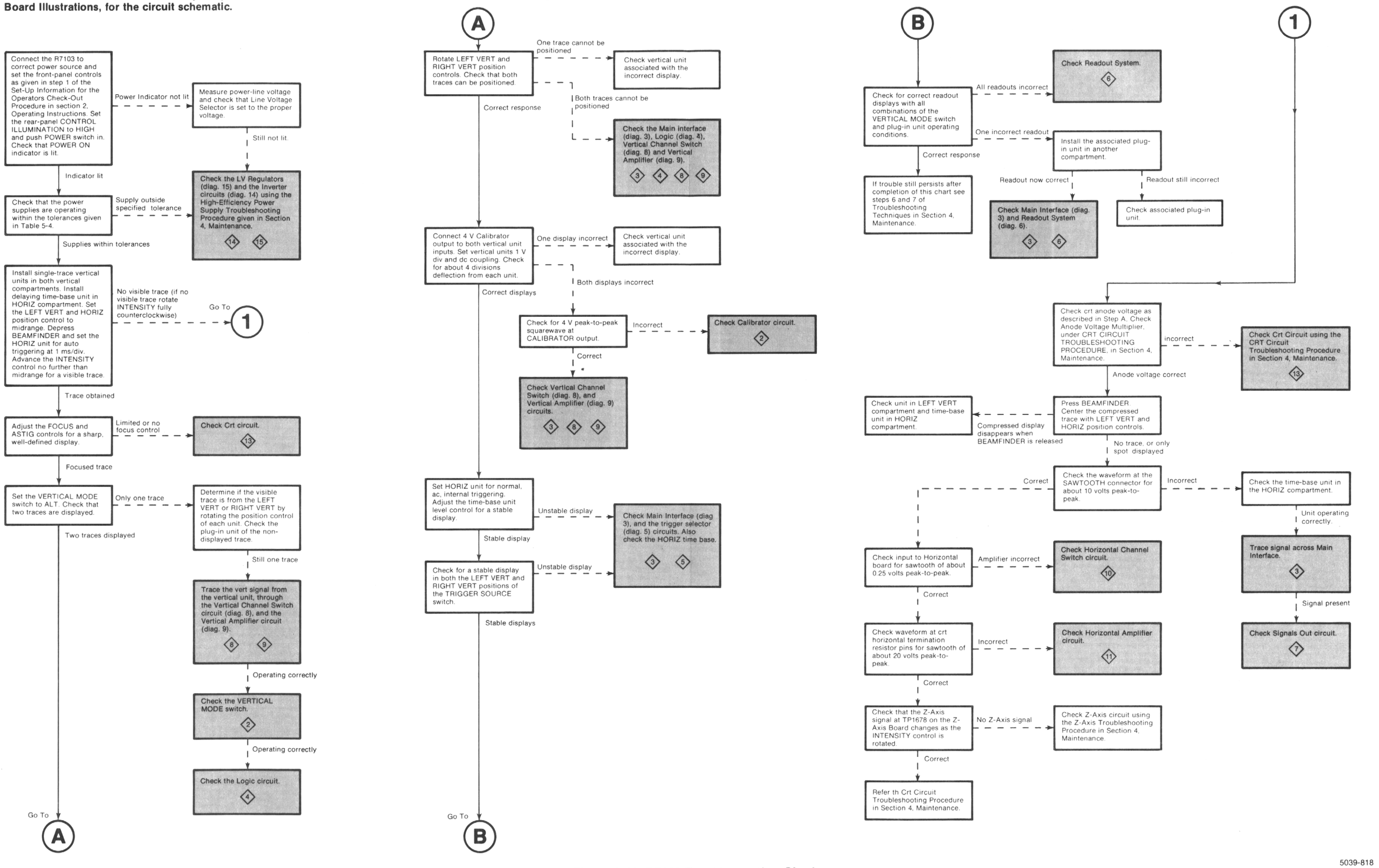


5039-818

**Figure 8-18. R7103 Troubleshooting Chart.**

http://manoman.sqhill.com

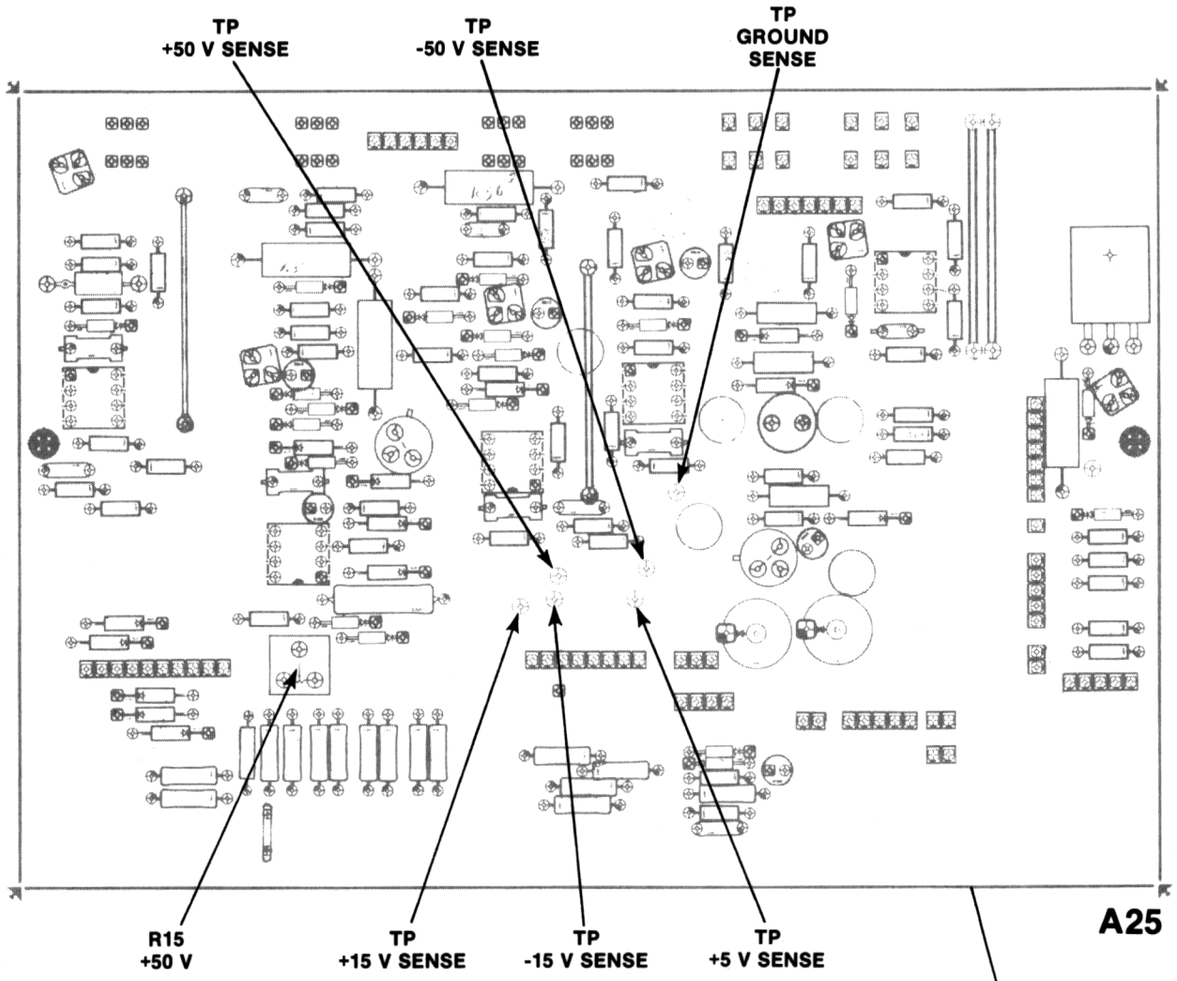


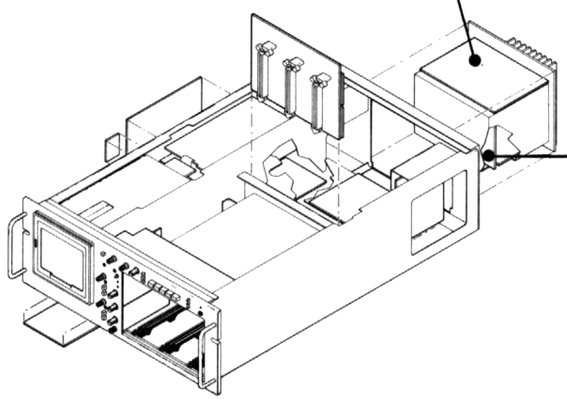


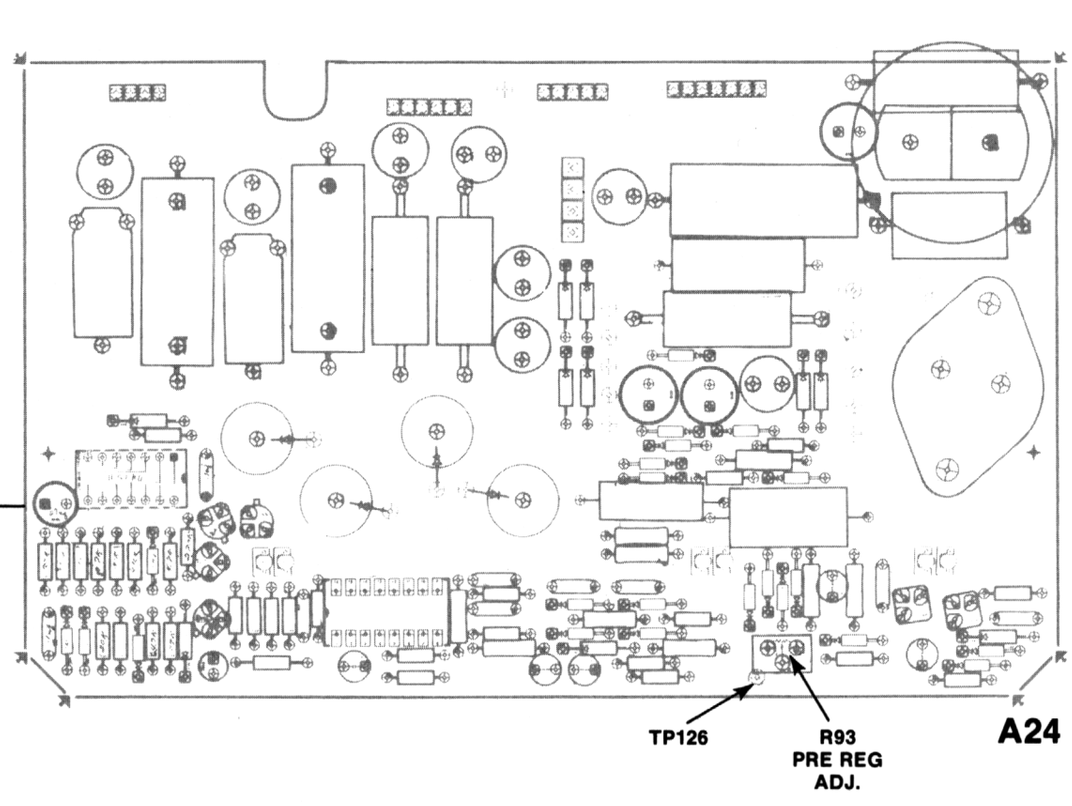


**Figure 8-19. Test Point and Adjustment Locations A.**

http://manoman.sqhill.com

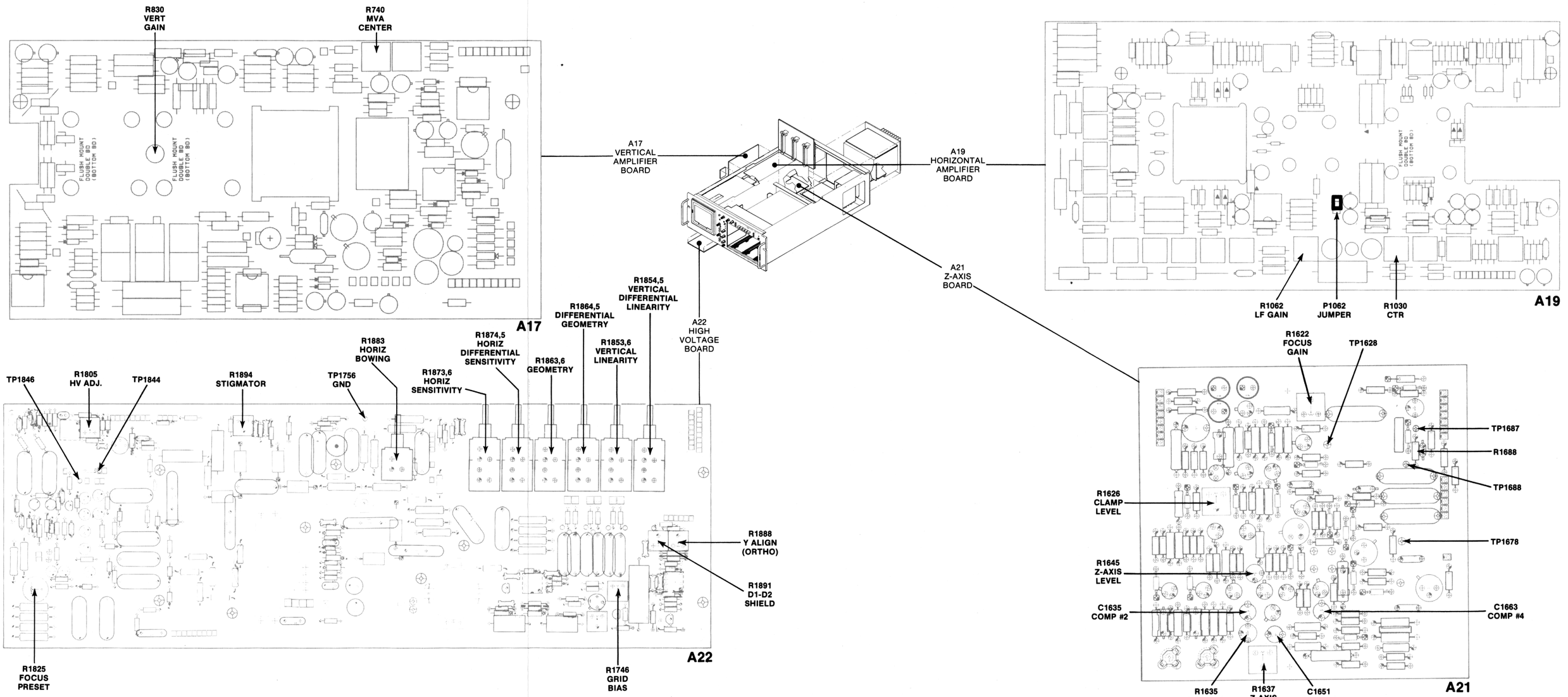


Figure 8-20. Test Point and Adjustment Locations B.

5039-820

http://manoman.sghill.com

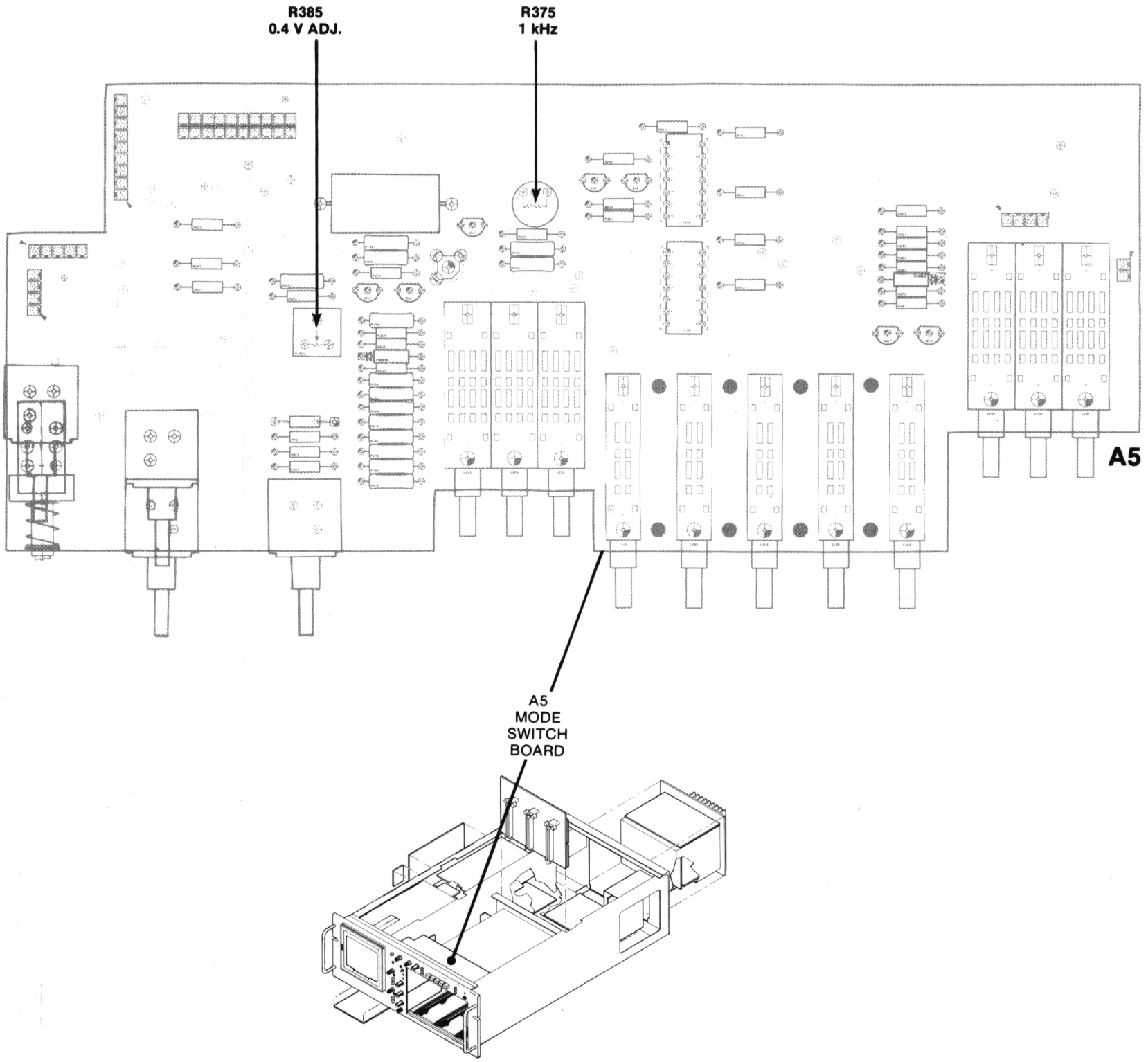


5039-821

**Figure 8-21. Adjustment Locations C.**

http://manoman.sqhill.com

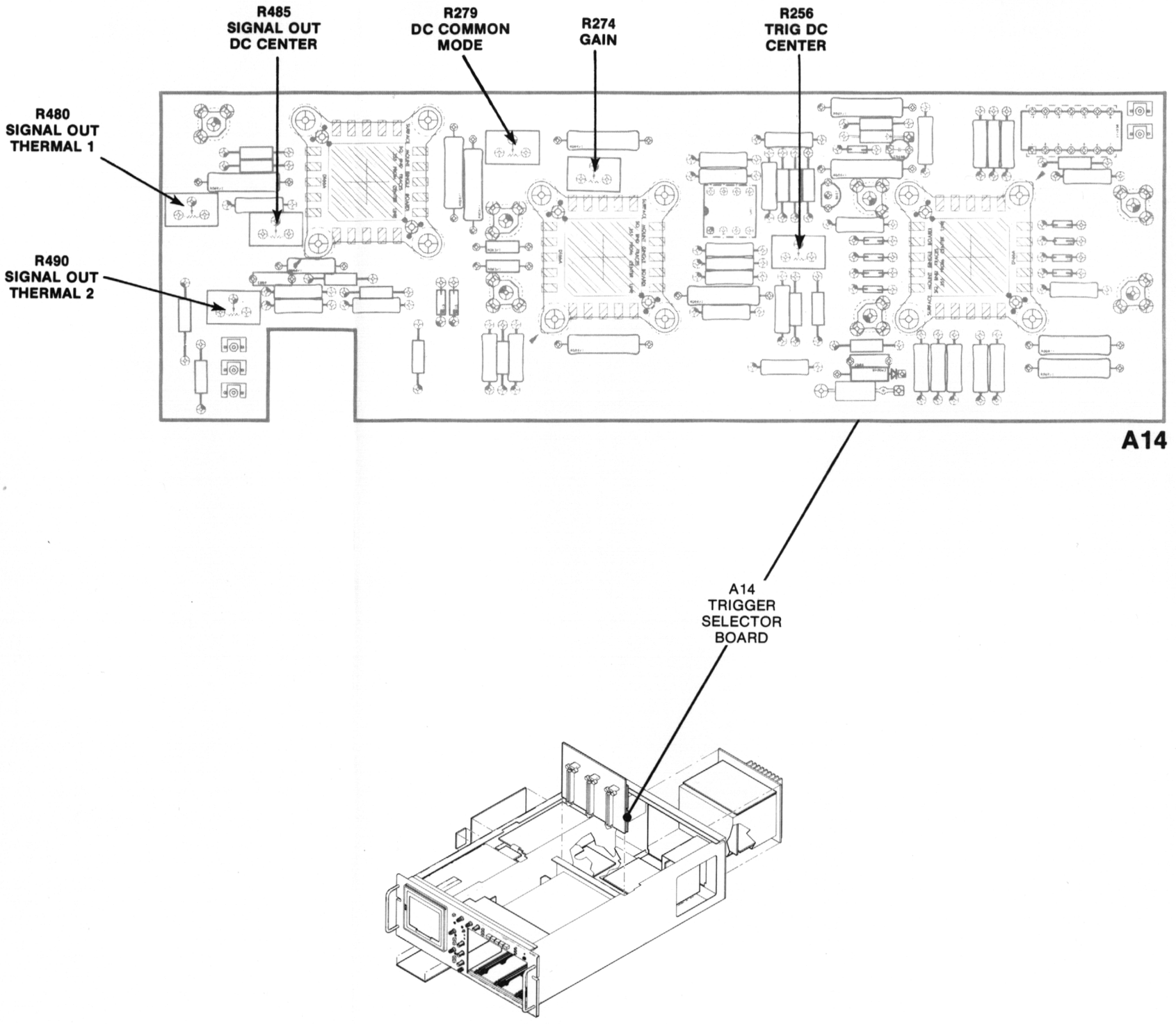


**Figure 8-22. Adjustment Locations D.**



http://manoman.sqhill.com

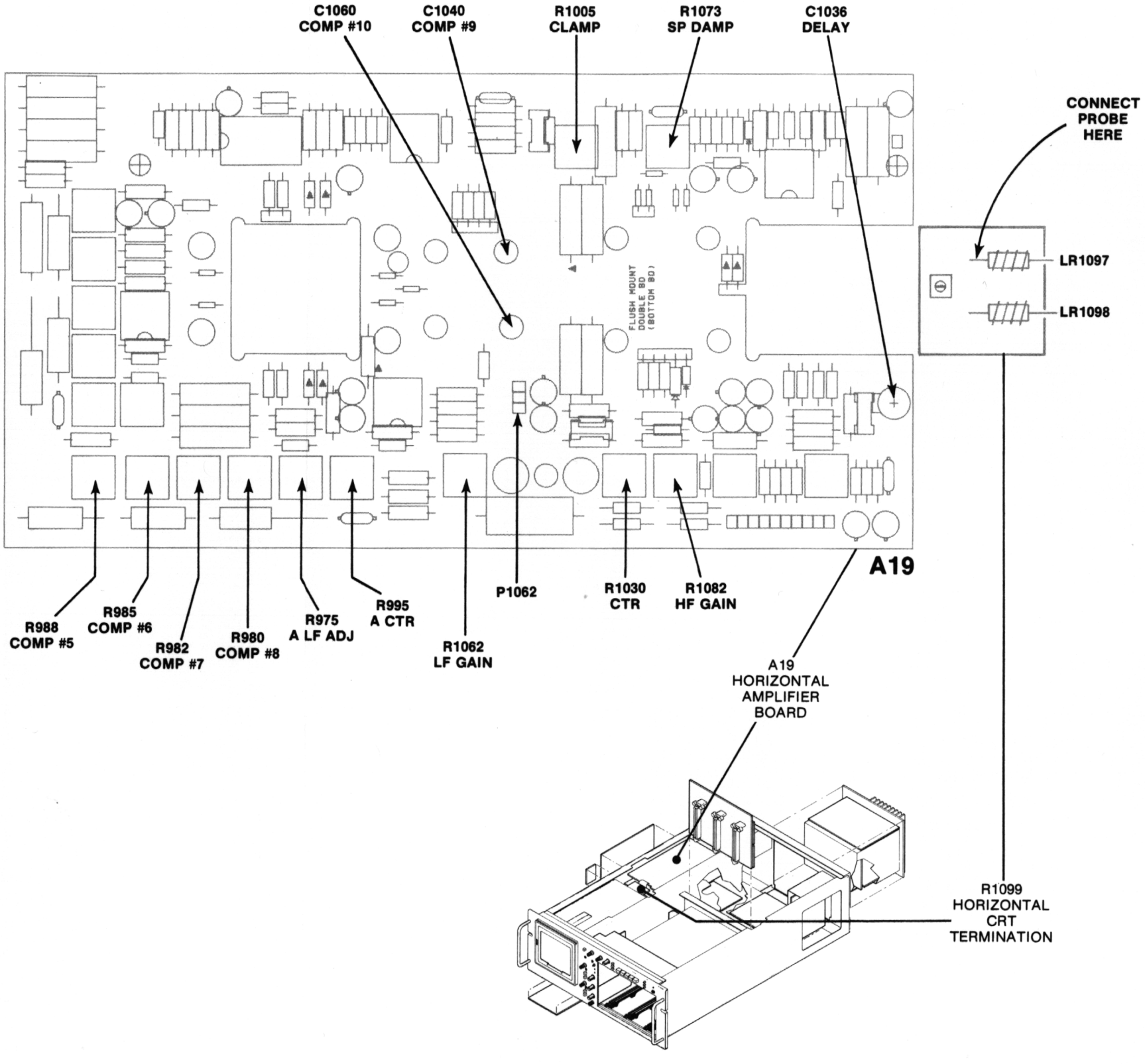


**Figure 8-23. Test Point and Adjustment Locations E.**

http://manoman.sqhill.com

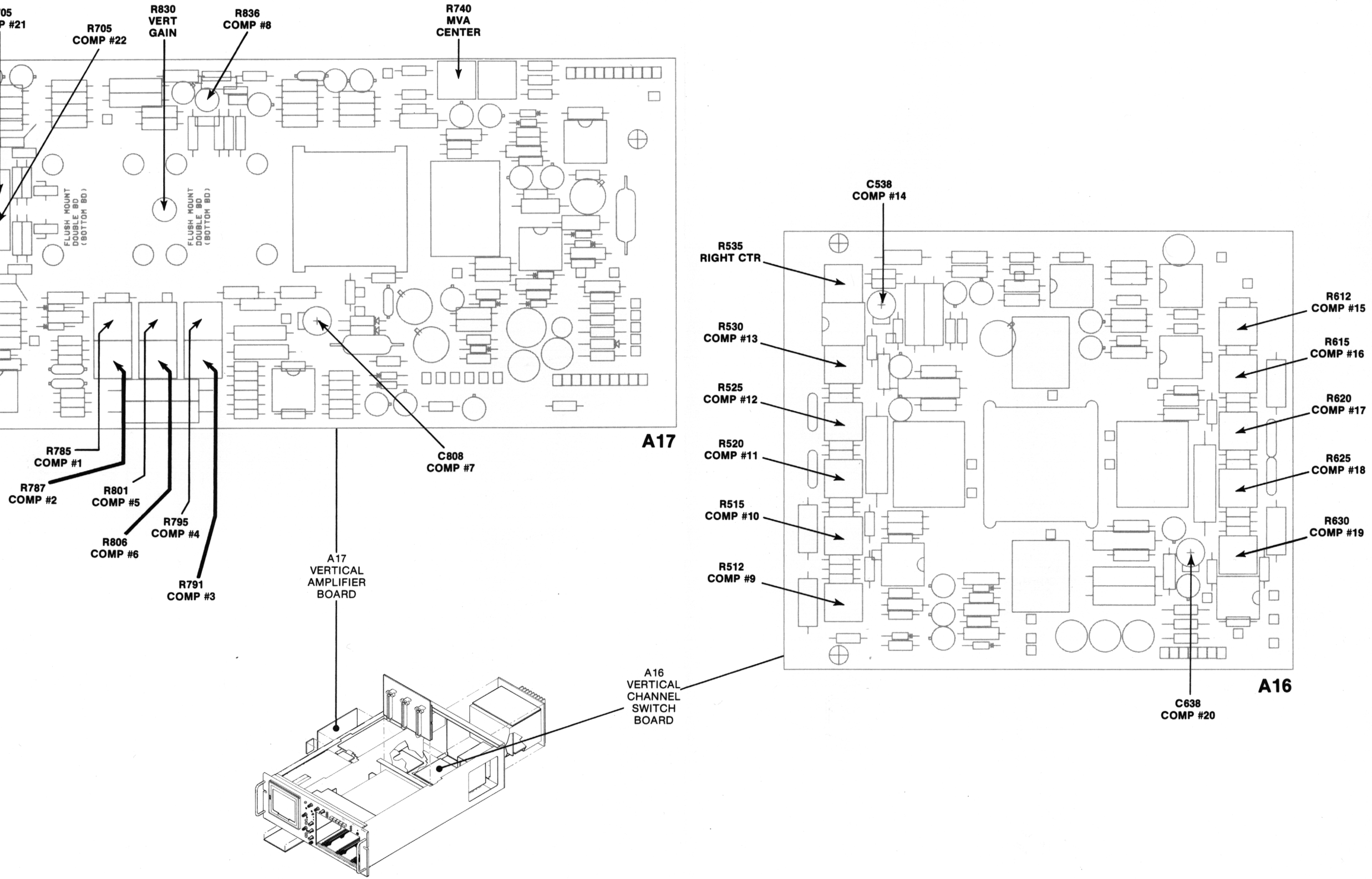


**Figure 8-24. Test Point and Adjustment Locations F.**

http://manoman.sqhill.com

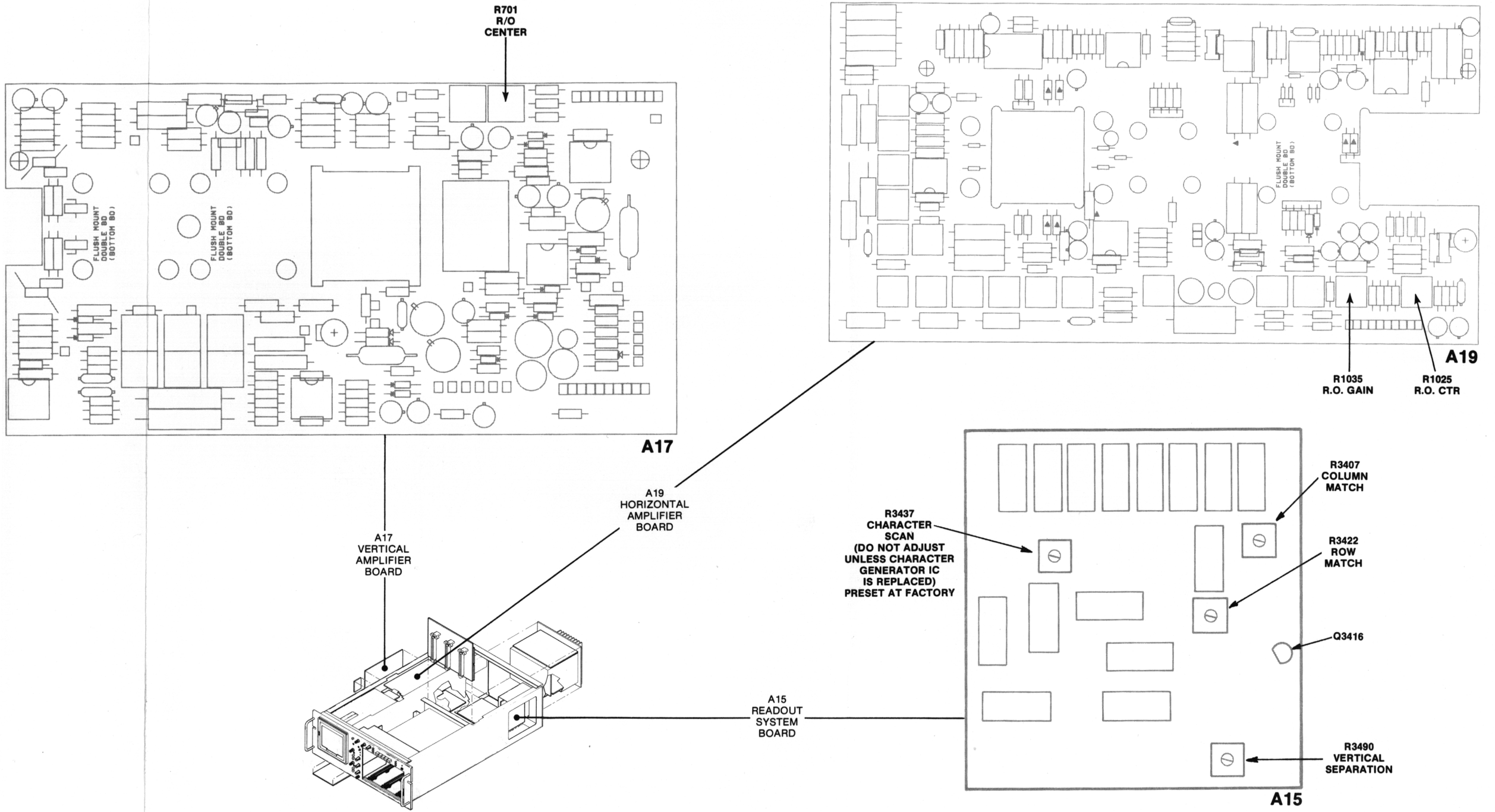


**Figure 8-25. Test Point and Adjustment Locations G.**

REV JAN 1985

5039-825A

http://manoman.sghill.com

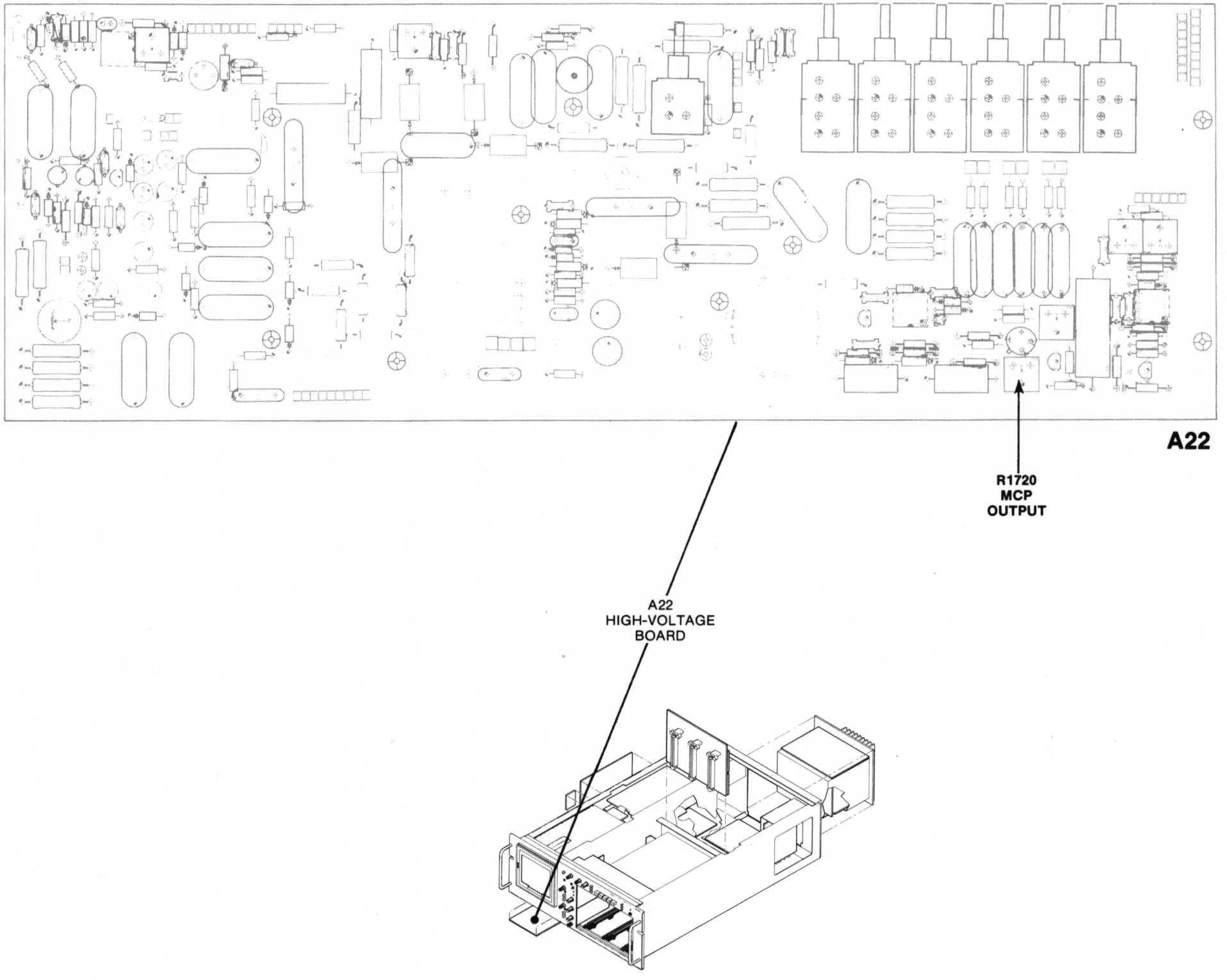


**Figure 8-26. Adjustment Location H.**

http://manoman.sqhill.com

# REPLACEABLE MECHANICAL PARTS

## PARTS ORDERING INFORMATION

Replacement parts are available from or through your local Tektronix, Inc. Field Office or representative.

Changes to Tektronix instruments are sometimes made to accommodate improved components as they become available, and to give you the benefit of the latest circuit improvements developed in our engineering department. It is therefore important, when ordering parts, to include the following information in your order: Part number, instrument type or number, serial number, and modification number if applicable.

If a part you have ordered has been replaced with a new or improved part, your local Tektronix, Inc. Field Office or representative will contact you concerning any change in part number.

Change information, if any, is located at the rear of this manual.

## ITEM NAME

In the Parts List, an Item Name is separated from the description by a colon (:). Because of space limitations, an Item Name may sometimes appear as incomplete. For further Item Name identification, the U.S. Federal Cataloging Handbook H6-1 can be utilized where possible.

## FIGURE AND INDEX NUMBERS

Items in this section are referenced by figure and index numbers to the illustrations.

## INDENTATION SYSTEM

This mechanical parts list is indented to indicate item relationships. Following is an example of the indentation system used in the description column.

```
1 2 3 4 5                    Name & Description

Assembly and/or Component
Attaching parts for Assembly and/or Component
                - - - * - - -
   Detail Part of Assembly and/or Component
   Attaching parts for Detail Part
                - - - * - - -
      Parts of Detail Part
      Attaching parts for Parts of Detail Part
                - - - * - - -
```

Attaching Parts always appear in the same indentation as the item it mounts, while the detail parts are indented to the right. Indented items are part of, and included with, the next higher indentation. The separation symbol - - - * - - - indicates the end of attaching parts.

**Attaching parts must be purchased separately, unless otherwise specified.**

## ABBREVIATIONS

| | |
|---|---|
| " | INCH |
| # | NUMBER SIZE |
| ACTR | ACTUATOR |
| ADPTR | ADAPTER |
| ALIGN | ALIGNMENT |
| AL | ALUMINUM |
| ASSEM | ASSEMBLED |
| ASSY | ASSEMBLY |
| ATTEN | ATTENUATOR |
| AWG | AMERICAN WIRE GAGE |
| BD | BOARD |
| BRKT | BRACKET |
| BRS | BRASS |
| BRZ | BRONZE |
| BSHG | BUSHING |
| CAB | CABINET |
| CAP | CAPACITOR |
| CER | CERAMIC |
| CHAS | CHASSIS |
| CKT | CIRCUIT |
| COMP | COMPOSITION |
| CONN | CONNECTOR |
| COV | COVER |
| CPLG | COUPLING |
| CRT | CATHODE RAY TUBE |
| DEG | DEGREE |
| DWR | DRAWER |
| ELCTRN | ELECTRON |
| ELEC | ELECTRICAL |
| ELCTLT | ELECTROLYTIC |
| ELEM | ELEMENT |
| EPL | ELECTRICAL PARTS LIST |
| EQPT | EQUIPMENT |
| EXT | EXTERNAL |
| FIL | FILLISTER HEAD |
| FLEX | FLEXIBLE |
| FLH | FLAT HEAD |
| FLTR | FILTER |
| FR | FRAME or FRONT |
| FSTNR | FASTENER |
| FT | FOOT |
| FXD | FIXED |
| GSKT | GASKET |
| HDL | HANDLE |
| HEX | HEXAGON |
| HEX HD | HEXAGONAL HEAD |
| HEX SOC | HEXAGONAL SOCKET |
| HLCPS | HELICAL COMPRESSION |
| HLEXT | HELICAL EXTENSION |
| HV | HIGH VOLTAGE |
| IC | INTEGRATED CIRCUIT |
| ID | INSIDE DIAMETER |
| IDENT | IDENTIFICATION |
| IMPLR | IMPELLER |
| IN | INCH |
| INCAND | INCANDESCENT |
| INSUL | INSULATOR |
| INTL | INTERNAL |
| LPHLDR | LAMPHOLDER |
| MACH | MACHINE |
| MECH | MECHANICAL |
| MTG | MOUNTING |
| NIP | NIPPLE |
| NON WIRE | NOT WIRE WOUND |
| OBD | ORDER BY DESCRIPTION |
| OD | OUTSIDE DIAMETER |
| OVH | OVAL HEAD |
| PH BRZ | PHOSPHOR BRONZE |
| PL | PLAIN or PLATE |
| PLSTC | PLASTIC |
| PN | PART NUMBER |
| PNH | PAN HEAD |
| PWR | POWER |
| RCPT | RECEPTACLE |
| RES | RESISTOR |
| RGD | RIGID |
| RLF | RELIEF |
| RTNR | RETAINER |
| SCH | SOCKET HEAD |
| SCOPE | OSCILLOSCOPE |
| SCR | SCREW |
| SE | SINGLE END |
| SECT | SECTION |
| SEMICOND | SEMICONDUCTOR |
| SHLD | SHIELD |
| SHLDR | SHOULDERED |
| SKT | SOCKET |
| SL | SLIDE |
| SLFLKG | SELF-LOCKING |
| SLVG | SLEEVING |
| SPR | SPRING |
| SQ | SQUARE |
| SST | STAINLESS STEEL |
| STL | STEEL |
| SW | SWITCH |
| T | TUBE |
| TERM | TERMINAL |
| THD | THREAD |
| THK | THICK |
| TNSN | TENSION |
| TPG | TAPPING |
| TRH | TRUSS HEAD |
| V | VOLTAGE |
| VAR | VARIABLE |
| W/ | WITH |
| WSHR | WASHER |
| XFMR | TRANSFORMER |
| XSTR | TRANSISTOR |



http://manoman.sqhill.com

CROSS INDEX—MFR. CODE NUMBER TO MANUFACTURER

| Mfr. Code | Manufacturer | Address | City, State, Zip |
|---|---|---|---|
| 000BK | STAUFFER SUPPLY | 105 SE TAYLOR | PORTLAND, OR 97214 |
| 000GY | DEK INC. | 3480 SWENSEN AVE. | ST. CHARLES, IL 60174 |
| 00779 | AMP, INC. | P.O. BOX 3608 | HARRISBURG, PA 17105 |
| 01295 | TEXAS INSTRUMENTS, INC. SEMICONDUCTOR GROUP | P.O. BOX 5012 | DALLAS, TX 75222 |
| 02768 | ILLINOIS TOOL WORKS, INC., FASTEX DIV. | 195 ALGONQUIN ROAD | DES PLAINES, IL 60016 |
| 04811 | PRECISION COIL SPRING COMPANY | P O BOX 5450, 10107 ROSE ST. | EL MONTE, CA 91734 |
| 06383 | PANDUIT CORPORATION | 17301 RIDGELAND | TINLEY PARK, IL 60477 |
| 06666 | GENERAL DEVICES CO., INC. | 525 S. WEBSTER AVE. | INDIANAPOLIS, IN 46219 |
| 06950 | VSI CORP., SCREWCORP DIVISION | 13001 E. TEMPLE AVE. | CITY OF INDUSTRY, CA 91746 |
| 07416 | NELSON NAME PLATE CO. | 3191 CASITAS | LOS ANGELES, CA 90039 |
| 07707 | USM CORP., USM FASTENER DIV. | 510 RIVER RD. | SHELTON, CT 06484 |
| 08261 | SPECTRA-STRIP CORP. | 7100 LAMPSON AVE. | GARDEN GROVE, CA 92642 |
| 09922 | BURNDY CORPORATION | RICHARDS AVENUE | NORWALK, CT 06852 |
| 11897 | PLASTIGLIDE MFG. CORPORATION | P O BOX 867, 1757 STANFORD ST. | SANTA MONICA, CA 90406 |
| 12327 | FREEWAY CORPORATION | 9301 ALLEN DRIVE | CLEVELAND, OH 44125 |
| 13103 | THERMALLOY COMPANY, INC. | 2021 W VALLEY VIEW LANE P O BOX 34829 | DALLAS, TX 75234 |
| 16428 | BELDEN CORP. | P. O. BOX 1331 | RICHMOND, IN 47374 |
| 18565 | CHOMERICS INC. | 77 DRAGON COURT | WOBURN, MA 01801 |
| 18680 | HIGHLAND MFG. CO., THE DIV. OF BUELL INDUSTRIES, INC. | 1240 WOLCOTT STREET | WATERBURY, CT 06720 |
| 22526 | BERG ELECTRONICS, INC. | YOUK EXPRESSWAY | NEW CUMBERLAND, PA 17070 |
| 26365 | GRIES REPRODUCER CO., DIV. OF COATS AND CLARK, INC. | 125 BEECHWOOD AVE. | NEW ROCHELLE, NY 10802 |
| 28520 | HEYMAN MFG. CO. | 147 N. MICHIGAN AVE. | KENILWORTH, NJ 07033 |
| 30817 | INSTRUMENT SPECIALTIES COMPANY, INC. | | LITTLE FALLS,NJ 07424 |
| 49671 | RCA CORPORATION | 30 ROCKEFELLER PLAZA | NEW YORK, NY 10020 |
| 70485 | ATLANTIC INDIA RUBBER WORKS, INC. | 571 W. POLK ST. | CHICAGO, IL 60607 |
| 70903 | BELDEN CORP. | 2000 S BATAVIA AVENUE | GENEVA, IL 60134 |
| 71590 | CENTRALAB ELECTRONICS, DIV. OF GLOBE-UNION, INC. | P O BOX 858 | FORT DODGE, IA 50501 |
| 73743 | FISCHER SPECIAL MFG. CO. | 446 MORGAN ST. | CINCINNATI, OH 45206 |
| 77900 | SHAKEPROOF DIV OF ILLINOIS TOOL WORKS | SAINT CHARLES RD | ELGIN, IL 60120 |
| 78189 | ILLINOIS TOOL WORKS, INC. SHAKEPROOF DIVISION | ST. CHARLES ROAD | ELGIN, IL 60120 |
| 79807 | WROUGHT WASHER MFG. CO. | 2100 S. O BAY ST. | MILWAUKEE, WI 53207 |
| 80009 | TEKTRONIX, INC. | P O BOX 500 | BEAVERTON, OR 97077 |
| 80033 | PRESTOLE EVERLOCK, INC. | P. O. BOX 278,1345 MIAMI ST. | TOLEDO, OH 43605 |
| 83385 | CENTRAL SCREW CO. | 2530 CRESCENT DR. | BROADVIEW, IL 60153 |
| 83486 | ELCO INDUSTRIES, INC. | 1103 SAMUELSON ROAD | ROCKFORD, IL 61101 |
| 83907 | ACCURATE RUBBER PRODUCTS CO. | 123 N. RACINE | CHICAGO, IL 60607 |
| 85471 | BOYD, A. B., CO. | 2527 GRANT AVENUE | SAN LEANDRO, CA 94579 |
| 86928 | SEASTROM MFG. COMPANY, INC. | 701 SONORA AVENUE | GLENDALE, CA 91201 |
| 88245 | LITTON SYSTEMS, INC., USECO DIV. | 13536 SATICOY ST. | VAN NUYS, CA 91409 |
| 91836 | KINGS ELECTRONICS CO., INC. | 40 MARBLEDALE ROAD | TUCKAHOE, NY 10707 |
| 93907 | TEXTRON INC. CAMCAR DIV | 600 18TH AVE | ROCKFORD, IL 61101 |
| 95987 | WECKESSER CO., INC. | 4444 WEST IRVING PARK RD. | CHICAGO, IL 60641 |
| 98159 | RUBBER TECK, INC. | 19115 HAMILTON AVE., P O BOX 389 | GARDENA, CA 90247 |
| 98978 | INTERNATIONAL ELECTRONIC RESEARCH CORP. | 135 W. MAGNOLIA BLVD. | BURBANK, CA 91502 |
| S3109 | C/O PANEL COMPONENTS CORP. | P.O. BOX 6626 | SANTA ROSA, CA 95406 |
| S3629 | PANEL COMPONENTS CORP. | 2015 SECOND ST. | BERKELEY, CA 94170 |
| T0401 | SOUND MFG | 12115 E MARGINAL WAY SOUTH | SEATTLE, WA 98168 |
| T0435 | LEWIS SCREW CO. | 4114 SOUTH PERORIA AVE. | CHICAGO, IL 60609 |
| T1544 | COMPUTER CONNECTIONS | 2427 PRATT AVE | HAYWARD, CA 94544 |
| T1547 | MOORE ELECTRONICS | 15824 SW UPPER BOONES FERRY RD | LAKE OSWEGO, OR 97034 |
| T1741 | COLMAN FASTENERS CO LTD | HATTONS ROAD OFF WESTINGHOUSE ROAD, TRAFFORD PARK | MANCHESTER M 17 1DF ENGLAND |



http://manoman.sqhill.com

| Fig. & Index No. | Tektronix Part No. | Serial/Model No. Eff | Dscont | Qty | 1 2 3 4 5 | Name & Description | Mfr Code | Mfr Part Number |
|---|---|---|---|---|---|---|---|---|
| 1-1 | 378-0603-00 | | | 1 | | FILTER,MESH:EMI | 80009 | 378-0603-00 |
| -2 | 367-0112-00 | | | 1 | | PULL,MASK:1.01 X 0.35 X 0.26,BLK ACET | 80009 | 367-0112-00 |
| | | | | | | **********(ATTACHING PARTS)********** | | |
| -3 | 213-0055-00 | | | 1 | | SCR,TPG,THD FOR:2-32 X 0.188 INCH,PNH STL | 93907 | ORD BY DESCR |
| | | | | | | **********(END ATTACHING PARTS)********** | | |
| -4 | 378-0625-00 | | | 1 | | FILTER,LT,CRT:BLUE,5.15 X 4.4 X 0.03 | 80009 | 378-0625-00 |
| -5 | 331-0258-03 | | | 1 | | MASK,CRT SCALE: | 80009 | 331-0258-03 |
| -6 | 200-0939-01 | | | 1 | | RTNR,CRT SCALE:5.55 X 5.068 X 0.475,AL | 80009 | 200-0939-01 |
| | | | | | | **********(ATTACHING PARTS)********** | | |
| -7 | 212-0008-00 | | | 4 | | SCREW,MACHINE:8-32 X 0.500 INCH,PNH STL | 83385 | ORD BY DESCR |
| | | | | | | **********(END ATTACHING PARTS)********** | | |
| -8 | 337-1159-03 | | | 1 | | SHLD,IMPLOSION:4.75 X 3.93 X 0.7 THK,PLSTC | 80009 | 337-1159-03 |
| -9 | 331-0441-00 | | | 1 | | MASK,CRT SCALE: | 80009 | 331-0441-00 |
| -10 | 366-1189-00 | | | 4 | | KNOB:GY,0.127 ID X 0.5 OD X 0.53 | 80009 | 366-1189-00 |
| -11 | 210-0583-00 | | | 4 | | NUT,PLAIN,HEX:0.25-32 X 0.312 INCH,BRS | 73743 | 2X20317-402 |
| -12 | 210-0940-00 | | | 4 | | WASHER,FLAT:0.25 ID X 0.375 INCH OD,STL | 79807 | ORD BY DESCR |
| -13 | 366-1559-00 | | | 8 | | PUSH BUTTON:SIL GY,0.18 SQ X 0.43 | 80009 | 366-1559-00 |
| -14 | 426-1072-00 | | | 8 | | FRAME,PUSH BTN:PLASTIC | 80009 | 426-1072-00 |
| -15 | —— —— | | | - | | SWITCH,PUSH:(SEE S1988 REPL) | | |
| | | | | | | **********(ATTACHING PARTS)********** | | |
| -16 | 210-0583-00 | | | 1 | | NUT,PLAIN,HEX:0.25-32 X 0.312 INCH,BRS | 73743 | 2X20317-402 |
| -17 | 210-0940-00 | | | 1 | | WASHER,FLAT:0.25 ID X 0.375 INCH OD,STL | 79807 | ORD BY DESCR |
| | | | | | | **********(END ATTACHING PARTS)********** | | |
| -18 | 358-0301-02 | | | 4 | | BUSHING,SLEEVE:GRAY PLASTIC | 80009 | 358-0301-02 |
| -19 | 366-1161-57 | | | 1 | | PUSH BUTTON:SIL GRAY,LEFT | 80009 | 366-1161-57 |
| -20 | 366-1161-31 | | | 1 | | PUSH BUTTON:SIL GRAY,ALT | 80009 | 366-1161-31 |
| -21 | 366-1161-27 | | | 1 | | PUSH BUTTON:SIL GRAY,ADD | 80009 | 366-1161-27 |
| -22 | 366-1161-30 | | | 1 | | PUSH BUTTON:SIL GRAY,CHOP | 80009 | 366-1161-30 |
| -23 | 366-1161-58 | | | 1 | | PUSH BUTTON:SIL GRAY,RIGHT | 80009 | 366-1161-58 |
| -24 | 426-0568-00 | | | 5 | | FR,PUSHBUTTON:PANEL MOUNT | 80009 | 426-0568-00 |
| -25 | 366-1650-00 | | | 3 | | PUSH BUTTON:CLEAR,0.184 X 0.214 X 0.8 L | 80009 | 360-1650-00 |
| -26 | 366-1480-02 | | | 1 | | PUSH BUTTON:GRAY | 80009 | 366-1480-02 |
| -27 | 426-0681-00 | | | 1 | | FR,PUSH BUTTON: | 80009 | 426-0681-00 |
| -28 | 333-3110-00 | | | 1 | | PANEL,FRONT: | 80009 | 333-3110-00 |
| | | | | | | **********(ATTACHING PARTS)********** | | |
| -29 | 213-0055-00 | | | 2 | | SCR,TPG,THD FOR:2-32 X 0.188 INCH,PNH STL | 93907 | ORD BY DESCR |
| | | | | | | **********(END ATTACHING PARTS)********** | | |
| -30 | 367-0022-00 | | | 2 | | HANDLE,BOW:1.5 X 4.5 INCH | 88245 | 15986 |
| | | | | | | **********(ATTACHING PARTS)********** | | |
| -31 | 212-0577-00 | | | 4 | | SCREW,MACHINE:10-32 X 0.625 ",TRH,STL | 83385 | ORD BY DESCR |
| | | | | | | **********(END ATTACHING PARTS)********** | | |
| -32 | 131-3280-00 | | | 3 | | CLIP,GROUND:EMI/RFI,SST | 80009 | 131-3280-00 |
| -33 | 131-3279-00 | | | 1 | | CLIP,GROUND:EMI/RFI,SST | 80009 | 131-3279-00 |
| -34 | 352-0157-00 | | | 2 | | LAMPHOLDER:WHITE PLASTIC | 80009 | 352-0157-00 |
| -35 | 200-0935-00 | | | 2 | | BASE,LAMPHOLDER:0.29 OD X 0.19 CASE | 80009 | 200-0935-00 |
| -36 | 200-0678-00 | | | 4 | | COVER,ELEC CONN:BNC,SHORTING | 91836 | KC89-58TR5 |
| -37 | 346-0045-00 | | | 4 | | STRAP,CONN COV:BNC ONE END,POLYPROPYLENE | 80009 | 346-0045-00 |
| -38 | —— —— | | | 4 | | CONN,RCPT:(SEE J95,J1916,J1925,J1944 REPL) | | |
| | | | | | | **********(ATTACHING PARTS)********** | | |
| -39 | 210-0012-00 | | | 4 | | WASHER,LOCK:INTL,0.384 ID,INTL,0.022 TH | 78189 | 1220-02-00-0541C |
| -40 | 210-0413-00 | | | 4 | | NUT,PLAIN,HEX.:0.375-32 X 0.50 BRS | 73743 | 3145-402 |
| | | | | | | **********(END ATTACHING PARTS)********** | | |
| -41 | 129-0103-00 | | | 1 | | POST,BDG,ELEC:ASSEMBLY | 80009 | 129-0103-00 |
| | | | | | | **********(ATTACHING PARTS)********** | | |
| -42 | 210-0046-00 | | | 1 | | WASHER,LOCK:0.261 ID,INTL,0.018 THK,BRS | 77900 | 1214-05-00-0541C |
| -43 | 210-0583-00 | | | 1 | | NUT,PLAIN,HEX:0.25-32 X 0.312 INCH,BRS | 73743 | 2X20317-402 |
| | | | | | | **********(END ATTACHING PARTS)********** | | |
| -44 | 386-5151-00 | | | 1 | | SUBPANEL,FRONT: | 80009 | 386-5151-00 |
| -45 | 386-5150-00 | | | 1 | | SUPPORT,GASKET:EMI,BOTTOM,ALUMINUM | 80009 | 386-5150-00 |
| | | | | | | **********(ATTACHING PARTS)********** | | |
| -46 | 211-0105-00 | | | 3 | | SCREW,MACHINE:4-40 X 0.188,100 DEG,FLH ST | 83385 | ORD BY DESCR |
| | | | | | | **********(END ATTACHING PARTS)********** | | |



http://manoman.sqhill.com

| Fig. & Index No. | Tektronix Part No. | Serial/Model No. Eff | Dscont | Qty | 1 2 3 4 5 | Name & Description | Mfr Code | Mfr Part Number |
|---|---|---|---|---|---|---|---|---|
| 1-47 | 351-0202-00 | | | 3 | | GUIDE,SLIDE:UPPER | 80009 | 351-0202-00 |
| | | | | | | ••••••••••••••(ATTACHING PARTS)•••••••••••• | | |
| -48 | 211-0105-00 | | | 6 | | SCREW,MACHINE:4-40 X 0.188,100 DEG,FLH ST | 83385 | ORD BY DESCR |
| | | | | | | ••••••••••••(END ATTACHING PARTS)••••••••• | | |
| -49 | 351-0509-00 | | | 1 | | GUIDE,PUSH BTN:THREE LAMP | 80009 | 351-0509-00 |
| | | | | | | ••••••••••••••(ATTACHING PARTS)•••••••••••• | | |
| -50 | 211-0030-00 | | | 2 | | SCREW,MACHINE:2-56 X 0.25,FLH,82DEG,STL | 83385 | ORD BY DESCR |
| -51 | 210-0405-00 | | | 2 | | NUT,PLAIN,HEX:2-56 X 0.188,BRS,CD PL | 73743 | 12157-50 |
| | | | | | | ••••••••••••(END ATTACHING PARTS)••••••••• | | |
| -52 | — — | | | 1 | | CIRCUIT BOARD ASSY:TRIG LIGHT(SEE A3 REPL) | | |
| -53 | 386-5149-00 | | | 1 | | SUPPORT,GASKET:EMI,TOP,ALUMINUM | 80009 | 386-5149-00 |
| | | | | | | ••••••••••••••(ATTACHING PARTS)•••••••••••• | | |
| -54 | 211-0105-00 | | | 3 | | SCREW,MACHINE:4-40 X 0.188,100 DEG,FLH ST | 83385 | ORD BY DESCR |
| | | | | | | ••••••••••••(END ATTACHING PARTS)••••••••• | | |
| -55 | 348-0625-00 | | | 2 | | SHLD GSKT,ELEK:8.1 L | 80009 | 348-0625-00 |
| -56 | — — | | | 1 | | CIRCUIT BOARD ASSY:GRAT LIGHT(SEE A20 REPL | | |
| -57 | 378-0614-01 | | | 1 | | .REFLECTOR,LIGHT:INT SCALE ILLUMINATION | 80009 | 378-0614-01 |
| | | | | | | .••••••••••••••(ATTACHING PARTS)•••••••••••• | | |
| -58 | 211-0062-00 | | | 2 | | .SCREW,MACHINE:2-56 X 0.312,PNH,STL | 06950 | ORD BY DESCR |
| | | | | | | .••••••••••••(END ATTACHING PARTS)••••••••• | | |
| -59 | 344-0179-00 | | | 1 | | .CLIP,REFL RTNG:PLASTIC | 80009 | 344-0179-00 |
| -60 | 204-0380-00 | | | 1 | | BODY,TERMINAL: | 80009 | 204-0380-00 |
| | | | | | | ••••••••••••••(ATTACHING PARTS)•••••••••••• | | |
| -61 | 131-0765-01 | | | 3 | | TERM,FEED THRU:0.584 L X 0.625 OD BRS GOLD | 80009 | 131-0765-01 |
| | | | | | | ••••••••••••(END ATTACHING PARTS)••••••••• | | |
| -62 | 386-1884-10 | | | 1 | | SUPPORT,CRT:FRONT,FINISHED | 80009 | 386-1884-10 |
| | | | | | | ••••••••••••••(ATTACHING PARTS)•••••••••••• | | |
| -63 | 212-0040-00 | | | 2 | | SCREW,MACHINE:8-32 X 0.375 100 DEG,FLH ST | 83486 | ORD BY DESCR |
| | | | | | | ••••••••••••(END ATTACHING PARTS)••••••••• | | |
| | 348-0031-00 | | | 1 | | CHASSIS,SCOPE:VERTICAL AMPLIFIER | 80009 | 348-0031-00 |
| -64 | 200-2982-00 | | | 2 | | COVER,MAINFRAME:ALUMINUM | 80009 | 200-2982-00 |
| | | | | | | ••••••••••••••(ATTACHING PARTS)•••••••••••• | | |
| -65 | 211-0507-00 | B010100 | B030279 | 16 | | SCREW,MACHINE:6-32 X 0.312,PNH STL,CD PL | 83385 | ORD BY DESCR |
| | 211-0504-00 | B030280 | | 16 | | SCREW,MACHINE:6-32 X 0.250,PNH STL,CD PL | 83385 | ORD BY DESCR |
| -66 | 211-0538-00 | B010100 | B030279 | 4 | | SCREW,MACHINE:6-32 X 0.312"100 DEG,FLH | 83385 | ORD BY DESCR |
| | 211-0502-00 | B030280 | | 4 | | SCREW,MACHINE:6-32 X 0.188,FLH,100 DEG,ST | 83385 | ORD BY DESCR |
| | | | | | | ••••••••••••(END ATTACHING PARTS)••••••••• | | |
| -67 | 348-0274-00 | | | 2 | | SHLD GSKT,ELEK:FINGER TYPE,24.0 L | 30817 | 97-555CDC |
| | — — | | | - | | (EACH END OF SIDE CABINET) | | |
| -68 | 390-0928-00 | | | 1 | | CABINET,SIDE:LEFT,ALUMINUM | 80009 | 390-0928-00 |
| | | | | | | ••••••••••••••(ATTACHING PARTS)•••••••••••• | | |
| -69 | 212-0040-00 | | | 4 | | SCREW,MACHINE:8-32 X 0.375 100 DEG,FLH ST | 83486 | ORD BY DESCR |
| | | | | | | ••••••••••••(END ATTACHING PARTS)••••••••• | | |
| -70 | 200-2980-00 | | | 1 | | COVER,SIDE:LEFT,AL | 80009 | 200-2980-00 |
| | | | | | | ••••••••••••••(ATTACHING PARTS)•••••••••••• | | |
| -71 | 211-0101-00 | | | 8 | | SCREW,MACHINE:4-40 X 0.25,FLH,100 DEG,STL | 83385 | ORD BY DESCR |
| | | | | | | ••••••••••••(END ATTACHING PARTS)••••••••• | | |
| -72 | 426-2032-00 | | | 1 | | FRAME PNL,CAB:REAR | 80009 | 426-2032-00 |
| -73 | — — | | | 1 | | FAN:(SEE B90 REPL) | | |
| | | | | | | ••••••••••••••(ATTACHING PARTS)•••••••••••• | | |
| -74 | 211-0530-00 | | | 4 | | SCREW,MACHINE:6-32 X 1.750,PNH STL CD PL | 83385 | ORD BY DESCR |
| -75 | 210-0457-00 | | | 4 | | NUT,PL,ASSEM WA:6-32 X 0.312,STL CD PL | 83385 | ORD BY DESCR |
| | | | | | | ••••••••••••(END ATTACHING PARTS)••••••••• | | |
| -76 | 386-5166-00 | | | 1 | | PLATE,FAN MTG: | 80009 | 386-5166-00 |
| | | | | | | ••••••••••••••(ATTACHING PARTS)•••••••••••• | | |
| -77 | 211-0578-00 | | | 4 | | SCREW,MACHINE:6-32 X 0.438 1NCH,PNH STL | 83385 | ORD BY DESCR |
| | | | | | | ••••••••••••(END ATTACHING PARTS)••••••••• | | |
| -78 | 378-2049-00 | | | 1 | | GRILL,FAN:3.07 DIA | 80009 | 378-2049-00 |
| -79 | 386-5152-00 | | | 1 | | SPRT,MAINFRAME: | 80009 | 386-5152-00 |
| | | | | | | ••••••••••••••(ATTACHING PARTS)•••••••••••• | | |
| -80 | 212-0040-00 | | | 3 | | SCREW,MACHINE:8-32 X 0.375 100 DEG,FLH ST | 83486 | ORD BY DESCR |
| | | | | | | ••••••••••••(END ATTACHING PARTS)••••••••• | | |
| -81 | 344-0250-00 | | | 1 | | CLIP,ELECTRICAL:COMPONENT MOUNTING | 80033 | E50005-007 |
| | | | | | | ••••••••••••••(ATTACHING PARTS)•••••••••••• | | |
| -82 | 211-0008-00 | | | 1 | | SCREW,MACHINE:4-40 X 0.250,PNH,STL,POZ | 83385 | ORD BY DESCR |
| -83 | 210-0586-00 | | | 1 | | NUT,PL,ASSEM WA:4-40 X 0.25,STL CD PL | T0435 | ORD BY DESCR |
| | | | | | | ••••••••••••(END ATTACHING PARTS)••••••••• | | |



http://manoman.sqhill.com

| Fig. & Index No. | Tektronix Part No. | Serial/Model No. Eff | Dscont | Qty | 1 2 3 4 5 | Name & Description | Mfr Code | Mfr Part Number |
|---|---|---|---|---|---|---|---|---|
| 1-84 | 343-0853-00 | | | 1 | | CLAMP,LOOP:0.5 DIA,NYLON | 000GY | 021-0500 |
| -85 | 255-0334-00 | | | 1 | | PLASTIC CHANNEL:12.75 X 0.175 X 0.155,NYL | 11897 | 122-37-2500 |
| -86 | —— —— | | | 1 | | RESISTOR,POWER:(SEE R90 REPL) | | |
| | | | | | | ••••••••••••••(ATTACHING PARTS)•••••••••••• | | |
| -87 | 211-0553-00 | | | 1 | | SCREW,MACHINE:6-32 X 1.5 INCH,PNH STL | 83385 | ORD BY DESCR |
| -88 | 210-0601-00 | | | 1 | | EYELET,METALLIC:CAD PLATED | 18680 | 77362 |
| -89 | 210-0478-00 | | | 1 | | INSERT,SCR THD:0.66" L,W/HEX FLG ONE END | 80009 | 210-0478-00 |
| -90 | 210-0202-00 | | | 1 | | TERMINAL,LUG:0.146 ID,LOCKING,BRZ,TIN PL | 86928 | A-373-158-2 |
| -91 | 211-0507-00 | | | 1 | | SCREW,MACHINE:6-32 X 0.312,PNH STL,CD PL | 83385 | ORD BY DESCR |
| | | | | | | ••••••••••••(END ATTACHING PARTS)••••••••• | | |
| -92 | 175-9324-00 | | | 1 | | CA ASSY,SP,ELEC:2,26 AWG,12.0 L,RIBBON | T1544 | ORD BY DESCR |
| | —— —— | | | - | | (R90 TO A25P90) | | |
| -93 | 348-0274-00 | | | 2 | | SHLD GSKT,ELEK:FINGER TYPE,24.0 L | 30817 | 97-555CDC |
| | —— —— | | | - | | (EACH END OF SIDE CABINET) | | |
| -94 | 390-0929-00 | | | 1 | | CABINET,SIDE:RIGHT,ALUMINUM | 80009 | 390-0929-00 |
| | | | | | | ••••••••••••••(ATTACHING PARTS)•••••••••••• | | |
| -95 | 212-0040-00 | | | 4 | | SCREW,MACHINE:8-32 X 0.375 100 DEG,FLH ST | 83486 | ORD BY DESCR |
| -96 | 211-0507-00 | | | 4 | | SCREW,MACHINE:6-32 X 0.312,PNH STL,CD PL | 83385 | ORD BY DESCR |
| -97 | 211-0503-00 | | | 1 | | SCREW,MACHINE:6-32 X 0.188 INCH,PNH STL | 83385 | ORD BY DESCR |
| | | | | | | ••••••••••••(END ATTACHING PARTS)••••••••• | | |
| -98 | 200-2981-00 | | | 1 | | COVER,SIDE:RIGHT | 80009 | 200-2981-00 |
| | | | | | | ••••••••••••••(ATTACHING PARTS)•••••••••••• | | |
| -99 | 211-0101-00 | | | 4 | | SCREW,MACHINE:4-40 X 0.25,FLH,100 DEG,STL | 83385 | ORD BY DESCR |
| | | | | | | ••••••••••••(END ATTACHING PARTS)••••••••• | | |
| -100 | 386-2141-00 | | | 1 | | SPRT,EXT SHAFT:PUSH SWITCH | 80009 | 386-2141-00 |
| -101 | 361-0007-00 | | | 1 | | SPACER,SLEEVE:0.250 INCH DIA,PLASTIC | 80009 | 361-0007-00 |
| -102 | 351-0313-00 | | | 1 | | GUIDE,RACKMOUNT:19.218 INCH LONG,PAIR | 06666 | ORD BY DESCR |
| | | | | | | ••••••••••••••(ATTACHING PARTS)•••••••••••• | | |
| -103 | 210-0458-00 | | | 12 | | NUT,PL,ASSEM WA:8-32 X 0.344,STL,CD PL | 78189 | 511-081800-00 |
| | | | | | | ••••••••••••(END ATTACHING PARTS)••••••••• | | |



http://manoman.sqhill.com

| Fig. & Index No. | Tektronix Part No. | Serial/Model No. Eff | Dscont | Qty | 1 2 3 4 5 | Name & Description | Mfr Code | Mfr Part Number |
|---|---|---|---|---|---|---|---|---|
| 2-1 | — — | | | 1 | | CIRCUIT BOARD ASSY:HORIZ AMPL(SEE A19 REPL | | |
| | | | | | | ••••••••••••••(ATTACHING PARTS)•••••••••••• | | |
| -2 | 211-0292-00 | | | 6 | | SCR,ASSEM WSHR:4-40 X 0.29,BRS NI PL | 78189 | 51-040445-01 |
| -3 | 211-0260-00 | | | 4 | | SCR,ASSEM WSHR:2-56 X 0.6875 L,PNH,STL CD | 78189 | ORD BY DESCR |
| | | | | | | ••••••••••••(END ATTACHING PARTS)••••••••• | | |
| | — — | | | - | | HORIZONTAL AMPLIFIER ASSY INCLUDES: | | |
| -4 | 131-0993-00 | | | 1 | | .BUS,CONDUCTOR:2 WIRE BLACK | 00779 | 850100-01 |
| -5 | 131-1967-00 | | | 3 | | .CONT SET,ELEC:MICROCKT,1.75 CM,RUBBER | 80009 | 131-1967-00 |
| -6 | 426-1351-00 | | | 3 | | .FRAME,MICROCKT:1.75 CM | 80009 | 426-1351-00 |
| | | | | | | .••••••••••••••(ATTACHING PARTS)•••••••••••• | | |
| -7 | 211-0259-00 | | | 8 | | .SCR,ASSEM WSHR:2-56 X 0.437,PNH,STL CD PL | 78189 | ORD BY DESCR |
| | | | | | | .••••••••••••(END ATTACHING PARTS)••••••••• | | |
| -8 | 131-1923-00 | | | 1 | | .CONTACT,ELEC:MICROCIRCUIT | 80009 | 131-1923-00 |
| -9 | 426-1337-00 | | | 1 | | .FRAME,MICROCKT:1.22 CM | 80009 | 426-1337-00 |
| | | | | | | .••••••••••••••(ATTACHING PARTS)•••••••••••• | | |
| -10 | 211-0259-00 | | | 4 | | .SCR,ASSEM WSHR:2-56 X 0.437,PNH,STL CD PL | 78189 | ORD BY DESCR |
| | | | | | | .••••••••••••(END ATTACHING PARTS)••••••••• | | |
| -11 | 214-2543-00 | | | 2 | | .HT SK,MICROCKT:MICROCIRCUIT,AL | 80009 | 214-2543-00 |
| -12 | — — | | | 1 | | .HORIZ FLEX CONN (SEE A19A1REPL) | | |
| | — — | | | - | | (6-1 TO A19J71;6-0 TO A19J970) | | |
| -13 | 175-9307-00 | | | 1 | | CA ASSY,SP,ELEC:10,26 AWG,3.0 L,RIBBON | T1544 | ORDER BY DESCR |
| | — — | | | - | | (A19J882 TO A17J782) | | |
| -14 | 196-1505-00 | | | 1 | | LEAD,ELECTRICAL:26 AWG,3.0 L,9-1 | 80009 | 196-1505-00 |
| | — — | | | - | | (A19J1094 TO R1099) | | |
| -15 | — — | | | 1 | | HORIZONTAL TERMINATION (SEE R1099 REPL) | | |
| | | | | | | ••••••••••••••(ATTACHING PARTS)•••••••••••• | | |
| -16 | 211-0504-00 | | | 2 | | SCREW,MACHINE:6-32 X 0.250,PNH STL,CD PL | 83385 | ORD BY DESCR |
| -17 | 210-0202-00 | | | 1 | | TERMINAL,LUG:0.146 ID,LOCKING,BRZ,TIN PL | 86928 | A-373-158-2 |
| | | | | | | ••••••••••••(END ATTACHING PARTS)••••••••• | | |
| -18 | 195-0581-00 | | | 2 | | LEAD,ELECTRICAL:26 AWG,1.5 L,9-1 | 80009 | 195-0581-00 |
| | — — | | | - | | (COILS TO CRT PINS) | | |
| -19 | — — | | | 1 | | CRT TERMINATION:(SEE A18 REPL) | | |
| | | | | | | ••••••••••••••(ATTACHING PARTS)•••••••••••• | | |
| -20 | 211-0259-00 | | | 2 | | SCR,ASSEM WSHR:2-56 X 0.437,PNH,STL CD PL | 78189 | ORD BY DESCR |
| | | | | | | ••••••••••••(END ATTACHING PARTS)••••••••• | | |
| | — — | | | - | | CRT TERMINATION ASSY INCLUDES: | | |
| -21 | 426-1351-00 | | | 1 | | .FRAME,MICROCKT:1.75 CM | 80009 | 426-1351-00 |
| | | | | | | .••••••••••••••(ATTACHING PARTS)•••••••••••• | | |
| -22 | 211-0260-00 | | | 2 | | .SCR,ASSEM WSHR:2-56 X 0.6875 L,PNH,STL CD | 78189 | ORD BY DESCR |
| | | | | | | .••••••••••••(END ATTACHING PARTS)••••••••• | | |
| -23 | 214-2543-00 | | | 1 | | .HT SK,MICROCKT:MICROCIRCUIT,AL | 80009 | 214-2543-00 |
| -24 | — — | | | 1 | | .VERTICAL CRT FLEX CONN (SEE A18A1 REPL) | | |
| -25 | — — | | | 1 | | SWITCH,THERM:(SEE S70 REPL) | | |
| | | | | | | ••••••••••••••(ATTACHING PARTS)•••••••••••• | | |
| -26 | 210-0007-00 | | | 2 | | WASHER,LOCK:#8 EXT,0.02 THK,STL CD PL | 78189 | 1108-00-00-0541C |
| | | | | | | ••••••••••••(END ATTACHING PARTS)••••••••• | | |
| -27 | — — | | | 1 | | CIRCUIT BOARD ASSY:VERT AMPL(SEE A17 REPL) | | |
| | | | | | | ••••••••••••••(ATTACHING PARTS)•••••••••••• | | |
| -28 | 211-0292-00 | | | 4 | | SCR,ASSEM WSHR:4-40 X 0.29,BRS NI PL | 78189 | 51-040445-01 |
| -29 | 211-0260-00 | | | 2 | | SCR,ASSEM WSHR:2-56 X 0.6875 L,PNH,STL CD | 78189 | ORD BY DESCR |
| | | | | | | ••••••••••••(END ATTACHING PARTS)••••••••• | | |
| | — — | | | - | | VERTICAL AMPLIFIER ASSY INCLUDES: | | |
| -30 | 136-0252-00 | | | 2 | | .SOCKET,PIN TERM:U/W 0.019 DIA PINS | 00779 | 2-330808-7 |
| | 136-0252-07 | | | 51 | | .SOCKET,PIN CONN:W/O DIMPLE | 22526 | 75060-012 |
| -31 | 136-0727-00 | | | 4 | | .SKT,PL-IN ELEK:MICROCKT,8 CONTACT | 09922 | DILB8P-108 |
| | 131-1967-00 | | | 3 | | .CONT SET,ELEC:MICROCKT,1.75 CM,RUBBER | 80009 | 131-1967-00 |
| -32 | 426-1351-00 | | | 3 | | .FRAME,MICROCKT:1.75 CM | 80009 | 426-1351-00 |
| | | | | | | .••••••••••••••(ATTACHING PARTS)•••••••••••• | | |
| -33 | 211-0259-00 | | | 10 | | .SCR,ASSEM WSHR:2-56 X 0.437,PNH,STL CD PL | 78189 | ORD BY DESCR |
| | | | | | | .••••••••••••(END ATTACHING PARTS)••••••••• | | |
| -34 | 214-2543-00 | | | 1 | | .HT SK,MICROCKT:MICROCIRCUIT,AL | 80009 | 214-2543-00 |
| -35 | — — | | | 1 | | .VERTICAL FLEX CONN (SEE A17A1 REPL) | | |
| -36 | 198-5423-00 | | | 1 | | WIRE SET,ELEC: | 80009 | 198-5423-00 |
| | — — | | | - | | (A17J790 TO A6J78,A15J04,A15J05) | | |



http://manoman.sqhill.com

| Fig. & Index No. | Tektronix Part No. | Serial/Model No. Eff | Dscont | Qty | 1 2 3 4 5 | Name & Description | Mfr Code | Mfr Part Number |
|---|---|---|---|---|---|---|---|---|
| 2-37 | 196-1504-00 | | | 1 | | LEAD,ELECTRICAL:26 AWG,3.0 L,9-1 | 80009 | 196-1504-00 |
| | — — | | | - | | (A17J783 TO CRT TERMINATION) | | |
| -38 | — — | | | - | | (FROM DL592) | | |
| -39 | 426-2031-00 | | | 1 | | FRAME SECT,CAB:LEFT,ALUMINUM | 80009 | 426-2031-00 |
| | | | | | | **********(ATTACHING PARTS)********** | | |
| -40 | 211-0504-00 | | | 4 | | SCREW,MACHINE:6-32 X 0.250,PNH STL,CD PL | 83385 | ORD BY DESCR |
| -41 | 210-0803-00 | | | 4 | | WASHER,FLAT:0.15 ID X 0.032 THK,STL CD | 12327 | ORD BY DESCR |
| | | | | | | **********(END ATTACHING PARTS)********** | | |
| -42 | 342-0313-00 | | | 1 | | INSULATOR,BSHG:0.437 ID X 0.567 INCH OD | 28520 | SB-562-7 |
| -43 | 337-2419-01 | | | 1 | | SHIELD,CRT: | 80009 | 337-2419-01 |
| | | | | | | **********(ATTACHING PARTS)********** | | |
| -44 | 211-0038-00 | | | 4 | | SCREW,MACHINE:4-40 X 0.312,FLH,100 DEG | 83385 | ORD BY DESCR |
| | | | | | | **********(END ATTACHING PARTS)********** | | |
| -45 | 220-0803-00 | | | 1 | | NUT,BAR:2.95 X 0.5 X 0.25;(4) 4-40 | 80009 | 220-0803-00 |
| | | | | | | **********(ATTACHING PARTS)********** | | |
| -46 | 211-0038-00 | | | 2 | | SCREW,MACHINE:4-40 X 0.312,FLH,100 DEG | 83385 | ORD BY DESCR |
| | | | | | | **********(END ATTACHING PARTS)********** | | |
| -47 | 214-2417-00 | | | 1 | | NUT,BAR:3.1 INCH LONG,AL | 80009 | 214-2417-00 |
| | | | | | | **********(ATTACHING PARTS)********** | | |
| -48 | 211-0038-00 | | | 2 | | SCREW,MACHINE:4-40 X 0.312,FLH,100 DEG | 83385 | ORD BY DESCR |
| | | | | | | **********(END ATTACHING PARTS)********** | | |
| -49 | 334-1379-00 | | | 1 | | MARKER,IDENT:MARKED HI VACUUM | 80009 | 334-1379-00 |
| -50 | 334-3302-00 | | | 1 | | MARKER,IDENT:MARKED ANODE LEAD CAUTION | 80009 | 334-3302-00 |
| -51 | 334-2208-00 | | | 1 | | MARKER,IDENT:MARKED DANGER | 80009 | 334-2208-00 |
| -52 | 348-0064-00 | | | 1 | | GROMMET,PLASTIC:GRAY,ROUND,0.582 ID | 80009 | 348-0064-00 |
| -53 | 348-0085-00 | | | 2 | | GROMMET,PLASTIC:GRAY,U-SHAPED,0.48 ID | 80009 | 348-0085-00 |
| -54 | 136-0648-00 | | | 1 | | SKT,PL-IN,ELEC:CRT,10 CONTACT W/LEADS | 80009 | 136-0648-00 |
| -55 | 204-0675-00 | | | 1 | | .CONN BODY,PLUG:1 FEMALE CONTACT | 00779 | 87175-2 |
| | — — | | | - | | .(TO A21J1602) | | |
| -56 | 352-0162-03 | | | 1 | | .HLDR,TERM CONN:4 WIRE,ORANGE | 80009 | 352-0162-03 |
| | — — | | | - | | .(TO A22J1703) | | |
| -57 | 352-0169-02 | | | 1 | | .HLDR,TERM CONN:2 WIRE,RED | 80009 | 352-0169-00 |
| | — — | | | - | | .(TO A22J1702) | | |
| -58 | 352-0164-02 | | | 1 | | .HLDR,TERM CONN:6 WIRE,RED | 80009 | 352-0164-02 |
| | — — | | | - | | .(TO A21J1602) | | |
| -59 | 343-0549-00 | | | 9 | | .STRAP,TIEDOWN:0.091 W X 4.0 L,ZYTEL | 06383 | PLT1M |
| -60 | 200-0917-01 | | | 1 | | .COV,CRT SKT:2.052 OD X 0.291 H,PLASTIC | 80009 | 200-0917-01 |
| -61 | 367-0117-00 | | | 1 | | .PULL,SOCKET:CRT,PLASTIC | 80009 | 367-0117-00 |
| -62 | 343-0254-00 | | | 1 | | .CLP,ELCTRN TUBE:DELRIN | 80009 | 343-0254-00 |
| -63 | 354-0347-00 | | | 1 | | RING,CRT CLAMP:2.127 ID X 2.595 OD X 0.563 | 80009 | 354-0347-00 |
| -64 | 343-0205-01 | | | 1 | | RTNR,ELCTRN TU:3.0 DIA X 1.5 L,DELRIN | 80009 | 343-0205-01 |
| | | | | | | **********(ATTACHING PARTS)********** | | |
| -65 | 211-0170-00 | | | 2 | | SCREW,MACHINE:4-40 X 2.75 INCH,PNH STL | 83385 | ORD BY DESCR |
| -66 | 214-1333-00 | | | 2 | | SPRING,HLCPS:0.213 OD X 0.375 INCH LONG | 80009 | 214-1333-00 |
| | | | | | | **********(END ATTACHING PARTS)********** | | |
| -67 | 386-3731-00 | | | 1 | | SUPPORT,CRT:REAR | 80009 | 386-3731-00 |
| | | | | | | **********(ATTACHING PARTS)********** | | |
| -68 | 211-0510-00 | | | 2 | | SCREW,MACHINE:6-32 X 0.375,PNH,STL,CD PL | 83385 | ORD BY DESCR |
| -69 | 210-0949-00 | | | 4 | | WASHER,FLAT:0.141 ID X 0.50 INCH OD,BRS | 12327 | ORD BY DESCR |
| | | | | | | **********(END ATTACHING PARTS)********** | | |
| -70 | 441-1566-00 | | | 1 | | CHASSIS,SCOPE:HIGH VOLTAGE | 80009 | 441-1566-00 |
| | | | | | | **********(ATTACHING PARTS)********** | | |
| -71 | 211-0507-00 | | | 3 | | SCREW,MACHINE:6-32 X 0.312,PNH STL,CD PL | 83385 | ORD BY DESCR |
| -72 | 211-0559-00 | | | 3 | | SCREW,MACHINE:6-32 X 0.375"100 DEG,FLH ST | 83385 | ORD BY DESCR |
| | | | | | | **********(END ATTACHING PARTS)********** | | |
| -73 | 334-3301-00 | | | 1 | | MARKER,IDENT:MARKED DANGER | 07416 | ORDER BY DESCR |
| -74 | 255-0334-00 | | | 1 | | PLASTIC CHANNEL:12.75 X 0.175 X 0.155,NYL | 11897 | 122-37-2500 |
| -75 | 348-0051-00 | | | 1 | | GROMMET,RUBBER:BLACK,ROUND,0.75 ID | 83907 | 1107 |
| -76 | — — | | | 1 | | CIRCUIT BOARD ASSY:HIGH VOLT(SEE A22 REPL) | | |
| | | | | | | **********(ATTACHING PARTS)********** | | |
| -77 | 129-0457-00 | | | 5 | | SPACER,POST:1.07L,W/4-40 TAP 1 END | 80009 | 129-0457-00 |
| -78 | 211-0507-00 | | | 3 | | SCREW,MACHINE:6-32 X 0.312,PNH STL,CD PL | 83385 | ORD BY DESCR |
| | | | | | | **********(END ATTACHING PARTS)********** | | |



http://manoman.sqhill.com

| Fig. & Index No. | Tektronix Part No. | Serial/Model No. Eff | Dscont | Qty | 1 2 3 4 5 | Name & Description | Mfr Code | Mfr Part Number |
|---|---|---|---|---|---|---|---|---|
| 2- | —— —— | | | - | | HIGH VOLTAGE ASSY INCLUDES: | | |
| -79 | 129-0230-00 | | | 3 | | .SPACER,POST:1.375L,W/4-40 THD EA END,BR | 80009 | 129-0230-00 |
| | | | | | | .**********(ATTACHING PARTS)********** | | |
| -80 | 211-0008-00 | | | 3 | | .SCREW,MACHINE:4-40 X 0.250,PNH,STL,POZ | 83385 | ORD BY DESCR |
| | | | | | | .**********(END ATTACHING PARTS)********** | | |
| -81 | 220-0835-00 | | | 3 | | .NUT,PLAIN HEX:10-24,0.375 DIA,NYLON | 95987 | N-1024-X |
| | —— —— | | | - | | .(ATTACHES U1700) | | |
| -82 | 334-3301-00 | | | 1 | | .MARKER,IDENT:MARKED DANGER | 07416 | ORDER BY DESCR |
| -83 | 337-3169-00 | | | 1 | | .SHIELD,ELEC:HIGH VOLTAGE,ALUMINUM | 80009 | 337-3169-00 |
| | | | | | | .**********(ATTACHING PARTS)********** | | |
| -84 | 211-0008-00 | | | 3 | | .SCREW,MACHINE:4-40 X 0.250,PNH,STL,POZ | 83385 | ORD BY DESCR |
| | | | | | | .**********(END ATTACHING PARTS)********** | | |
| -85 | 348-0064-00 | | | 1 | | GROMMET,PLASTIC:GRAY,ROUND,0.582 ID | 80009 | 348-0064-00 |
| -86 | 179-2933-00 | | | 1 | | WIRING HARNESS:HIGH VOLTAGE | T1544 | ORDER BY DESCR |
| | —— —— | | | - | | (A22J1705,J1709 TO A21J1605,J1609) | | |
| -87 | 337-3174-00 | | | 1 | | SHIELD,ELEC:HIGH VOLTAGE | T0401 | ORDER BY DESCR |
| | | | | | | **********(ATTACHING PARTS)********** | | |
| -88 | 211-0008-00 | | | 5 | | SCREW,MACHINE:4-40 X 0.250,PNH,STL,POZ | 83385 | ORD BY DESCR |
| | | | | | | **********(END ATTACHING PARTS)********** | | |
| -89 | 344-0133-00 | | | 2 | | CLIP,SPR,TNSN:CIRCUIT CARD MOUNTING | 80009 | 344-0133-00 |
| | | | | | | **********(ATTACHING PARTS)********** | | |
| -90 | 211-0007-00 | | | 2 | | SCREW,MACHINE:4-40 X 0.188,PNH STL,CD PL | 83385 | ORD BY DESCR |
| | | | | | | **********(END ATTACHING PARTS)********** | | |
| -91 | —— —— | | | 1 | | CIRCUIT BOARD ASSY:Z AXIS(SEE A21 REPL) | | |
| | | | | | | **********(ATTACHING PARTS)********** | | |
| -92 | 211-0292-00 | | | 3 | | SCR,ASSEM WSHR:4-40 X 0.29,BRS NI PL | 78189 | 51-040445-01 |
| | | | | | | **********(END ATTACHING PARTS)********** | | |
| | —— —— | | | - | | Z AXIS ASSY INCLUDES: | | |
| -93 | 136-0252-07 | | | 59 | | .SOCKET,PIN CONN:W/O DIMPLE | 22526 | 75060-012 |
| -94 | 386-1559-00 | | | 2 | | .SPACER,CKT BD:0.47 H,ACETAL | 80009 | 386-1559-00 |
| -95 | 334-3301-00 | | | 1 | | .MARKER,IDENT:MARKED DANGER | 07416 | ORDER BY DESCR |
| -96 | 214-2593-00 | | | 1 | | .HEAT SINK,XSTR:(1) TO-5 ALUMINUM | 13103 | 2257B |
| -97 | 385-0107-00 | | | 2 | | .SPACER,POST:0.75 L W/4-40 THD THRU,NYL | 80009 | 385-0107-00 |
| | | | | | | .**********(ATTACHING PARTS)********** | | |
| -98 | 211-0040-00 | | | 2 | | .SCREW,MACHINE:4-40 X 0.25",BDGH PLSTC | 26365 | 921-1120-0014 |
| | | | | | | .**********(END ATTACHING PARTS)********** | | |
| -99 | —— —— | | | 2 | | .CONN,RCPT:(SEE A21J1606,J6032 REPL) | | |
| -100 | 175-2937-00 | | | 1 | | CABLE ASSY,RF:50 OHM COAX,22.0 L,9-2 | 80009 | 175-2937-00 |
| | —— —— | | | - | | (A21J1632 TO A15J03) | | |
| -101 | 200-2081-00 | | | 1 | | COVER,CKT BD: | 80009 | 200-2081-00 |
| | | | | | | **********(ATTACHING PARTS)********** | | |
| -102 | 211-0040-00 | | | 2 | | SCREW,MACHINE:4-40 X 0.25",BDGH PLSTC | 26365 | 921-1120-0014 |
| | | | | | | **********(END ATTACHING PARTS)********** | | |



http://manoman.sqhill.com

| Fig. & Index No. | Tektronix Part No. | Serial/Model No. Eff | Dscont | Qty | 1 2 3 4 5 | Name & Description | Mfr Code | Mfr Part Number |
|---|---|---|---|---|---|---|---|---|
| 3-1 | — — | | | 1 | | CIRCUIT BOARD ASSY:FRONT PANEL(SEE A1 REPL<br>••••••••••••••(ATTACHING PARTS)•••••••••••• | | |
| -2 | 211-0008-00 | | | 1 | | SCREW,MACHINE:4-40 X 0.250,PNH,STL,POZ<br>••••••••••••(END ATTACHING PARTS)••••••••• | 83385 | ORD BY DESCR |
| | — — | | | 1 | | FRONT PANEL BOARD INCLUDES: | | |
| -3 | 136-0727-00 | | | 3 | | .SKT,PL-IN ELEK:MICROCKT,8 CONTACT | 09922 | DILB8P-108 |
| -4 | 136-0252-07 | B010100 | B030299 | 61 | | .SOCKET,PIN CONN:W/O DIMPLE | 22526 | 75060-012 |
| | 136-0252-07 | B030300 | | 7 | | .SOCKET,PIN CONN:W/O DIMPLE | 22526 | 75060-012 |
| | 361-0542-00 | | | 8 | | .SPACER,PUSH SW:0.078 L,POLYPROPYLENE | 71590 | J76113 |
| -5 | — — | | | 4 | | .CONN,RCPT:(SEE J1915,J1924,J1943,) | | |
| | — — | | | - | | .(J1992 REPL) | | |
| -6 | 175-9434-00 | | | 1 | | CABLE ASSY,RF:50 OHM COAX,2.5 L,9-4 | 80009 | 175-9434-00 |
| | — — | | | | | (A1J1924 TO J1925) | | |
| | 175-9433-00 | | | 1 | | CABLE ASSY,RF:50 OHM COAX,4.0 L,9-3 | 80009 | 175-9433-00 |
| | — — | | | | | (A1J1943 TO J1944) | | |
| | 175-9437-00 | | | 1 | | CABLE,ASSY,RF:50 OHM COAX,36.0 L,9-7 | 80009 | 175-9437-00 |
| | — — | | | | | (A1J1915 TO J1916) | | |
| | 198-5422-00 | | | 1 | | WIRE SET,ELEC: | 80009 | 198-5422-00 |
| | 175-9545-00 | | | 1 | | .CABLE ASSY,RF:50 OHM COAX,18.0 L,9-4 | 80009 | 175-9545-00 |
| | — — | | | | | .(A1J1992 TO A6J18) | | |
| | 131-0621-00 | | | 6 | | .CONNECTOR,TERM:22-26 AWG,BRS & CU BE GOLD | 22526 | 46231-000 |
| | 131-0792-00 | | | 6 | | .CONNECTOR,TERM:18-20 AWG,CU BE GOLD PL | 22526 | 46221 |
| -7 | 352-0204-00 | | | 2 | | .CONN BODY,PL,EL:8 WIRE BLACK | 80009 | 352-0204-00 |
| | — — | | | | | .(A1P1900,A6P18) | | |
| -8 | 175-9312-00 | | | 1 | | CA ASSY,SP,ELEC:5,26 AWG,30.0 L,RIBBON | T1544 | ORDER BY DESCR |
| | — — | | | | | (A1J1917 TO A25J17) | | |
| -9 | 175-9311-00 | | | 1 | | CA ASSY,SP,ELEC:4,26 AWG,10.0 L,RIBBON | T1544 | ORDER BY DESCR |
| | — — | | | | | (A1J910 TO A5J310) | | |
| -10 | 175-9317-00 | | | 1 | | CA ASSY,SP,ELEC:8,26 AWG,13.0 L,RIBBON | T1544 | ORDER BY DESCR |
| | — — | | | | | (A1J904 TO A22J1804) | | |
| -11 | 175-9315-00 | | | 1 | | CA ASSY,SP,ELEC:6,26 AWG,6.5 L,RIBBON | T1544 | ORDER BY DESCR |
| | — — | | | | | (A1J1909 TO LED'S) | | |
| -12 | 129-0304-00 | | | 1 | | INSULATOR,STDF:0.25 OD X 1.23 INCH LONG<br>••••••••••••••(ATTACHING PARTS)•••••••••••• | 80009 | 129-0304-00 |
| -13 | 211-0008-00 | | | 1 | | SCREW,MACHINE:4-40 X 0.250,PNH,STL,POZ<br>••••••••••••(END ATTACHING PARTS)••••••••• | 83385 | ORD BY DESCR |
| -14 | — — | | | 1 | | CIRCUIT BOARD ASSY:MODE SWITCH(SEE A5 REPL<br>••••••••••••••(ATTACHING PARTS)•••••••••••• | | |
| -15 | 211-0292-00 | | | 4 | | SCR,ASSEM WSHR:4-40 X 0.29,BRS NI PL<br>••••••••••••(END ATTACHING PARTS)••••••••• | 78189 | 51-040445-01 |
| | — — | | | | | MODE SWITCH BOARD INCLUDES: | | |
| -16 | — — | | | 2 | | .SWITCH PB ASSY:(SEE A5S365,A5S395 REPL) | | |
| -17 | 343-0496-03 | | | 2 | | .CLIP,SWITCH:FRONT,10 MM X 3 UNIT<br>.••••••••••••(ATTACHING PARTS)•••••••••••• | 80009 | 343-0496-03 |
| -18 | 210-3033-00 | | | 6 | | .EYELET,METALLIC:0.59 OD X 0.156 INCH LONG<br>.••••••••••(END ATTACHING PARTS)••••••••• | 07707 | SE-25 |
| -19 | 343-0497-03 | | | 2 | | .CLIP,SWITCH:REAR,10 MM X 3 UNIT<br>.••••••••••••(ATTACHING PARTS)•••••••••••• | 80009 | 343-0497-03 |
| -20 | 210-3033-00 | | | 6 | | .EYELET,METALLIC:0.59 OD X 0.156 INCH LONG<br>.••••••••••(END ATTACHING PARTS)••••••••• | 07707 | SE-25 |
| -21 | 343-0499-14 | | | 1 | | .CLIP,SWITCH:7.5MM X 5 UNIT<br>.••••••••••••(ATTACHING PARTS)•••••••••••• | 80009 | 343-0499-14 |
| -22 | 210-3033-00 | | | 5 | | .EYELET,METALLIC:0.59 OD X 0.156 INCH LONG<br>.••••••••••(END ATTACHING PARTS)••••••••• | 07707 | SE-25 |
| -23 | 343-0499-13 | | | 1 | | .CLIP,SWITCH:7.5MM X 4 UNIT<br>.••••••••••••(ATTACHING PARTS)•••••••••••• | 80009 | 343-0499-13 |
| -24 | 210-3033-00 | | | 4 | | .EYELET,METALLIC:0.59 OD X 0.156 INCH LONG<br>.••••••••••(END ATTACHING PARTS)••••••••• | 07707 | SE-25 |
| -25 | 343-0495-09 | | | 1 | | .CLIP,SWITCH:FRONT,7.5 MM,9 UNIT<br>.••••••••••••(ATTACHING PARTS)•••••••••••• | 80009 | 343-0495-09 |
| -26 | 210-3033-00 | | | 9 | | .EYELET,METALLIC:0.59 OD X 0.156 INCH LONG<br>.••••••••••(END ATTACHING PARTS)••••••••• | 07707 | SE-25 |
| -27 | 361-0542-00 | | | 2 | | .SPACER,PUSH SW:0.078 L,POLYPROPYLENE | 71590 | J76113 |
| | — — | | | - | | .(UNDER S390) | | |
| -28 | — — | | | 1 | | .CONN,RCPT:(SEE J392) | | |



http://manoman.sghill.com

| Fig. & Index No. | Tektronix Part No. | Serial/Model No. Eff | Dscont | Qty | 1 2 3 4 5 | Name & Description | Mfr Code | Mfr Part Number |
|---|---|---|---|---|---|---|---|---|
| 3-29 | 175-9435-00 | | | 1 | | CABLE ASSY,RF:50 OHM COAX,4.0 L,9-5 | 80009 | 175-9435-00 |
| | — — | | | - | | (A5J392 TO J396) | | |
| -30 | 175-9319-00 | | | 1 | | CA ASSY,SP,ELEC:9,26 AWG,15.0 L,RIBBON | T1544 | ORDER BY DESCR |
| | — — | | | - | | (A5J2006 TO A22J1806) | | |
| -31 | 175-9308-00 | | | 1 | | CA ASSY,SP,ELEC:5,26 AWG,22.0 L,RIBBON | T1544 | ORDER BY DESCR |
| | — — | | | - | | (A5J304 TO A20,DS308) | | |
| -32 | 175-9313-00 | | | 1 | | CA ASSY,SP,ELEC:4,26 AWG,4.0 L,RIBBON | T1544 | ORDER BY DESCR |
| | — — | | | - | | (A5J306 TO A3J346) | | |
| -33 | 384-1136-00 | | | 2 | | EXTENSION SHAFT:0.95 INCH LONG | 80009 | 384-1136-00 |
| -34 | 384-1354-00 | | | 4 | | EXTENSION SHAFT:1.585 INCH LONG,OFFSET,NYL | 80009 | 384-1354-00 |
| -35 | 386-1558-00 | | | 1 | | SPACER,CKT BD:0.335 H,ACETAL | 80009 | 386-1558-00 |
| -36 | 380-0727-00 | | | 1 | | HOUSING,PL-IN:ALUMINUM | 80009 | 380-0727-00 |
| | | | | | | ••••••••••••••(ATTACHING PARTS)•••••••••••• | | |
| -37 | 211-0504-00 | | | 5 | | SCREW,MACHINE:6-32 X 0.250,PNH STL,CD PL | 83385 | ORD BY DESCR |
| | | | | | | ••••••••••••(END ATTACHING PARTS)••••••••• | | |
| -38 | 361-0585-00 | | | 1 | | SPCR,GUIDE RAIL:PLUG-IN,AL | 80009 | 361-0585-00 |
| | | | | | | ••••••••••••••(ATTACHING PARTS)•••••••••••• | | |
| -39 | 213-0229-00 | | | 3 | | SCR,TPG,THD FOR:6-20 X0.375"100 DEG,FLH ST | 93907 | ORD BY DESCR |
| | | | | | | ••••••••••••(END ATTACHING PARTS)••••••••• | | |
| -40 | 351-0181-05 | | | 3 | | GUIDE,SLIDE:PLUG-IN UNIT,LWR,BLK NYLON | 80009 | 351-0181-05 |
| | | | | | | ••••••••••••••(ATTACHING PARTS)•••••••••••• | | |
| -41 | 213-0229-00 | | | 3 | | SCR,TPG,THD FOR:6-20 X0.375"100 DEG,FLH ST | 93907 | ORD BY DESCR |
| | | | | | | ••••••••••••(END ATTACHING PARTS)••••••••• | | |
| -42 | 384-1236-01 | | | 1 | | EXTENSION SHAFT:9.055 L,PLSTC | 80009 | 384-1236-01 |
| -43 | 200-1731-00 | | | 1 | | COVER,ELEC SW:1.9 X 1.0 X 0.45 CLR PLASTC | 85471 | ORD BY DESCR |
| | | | | | | ••••••••••••••(ATTACHING PARTS)•••••••••••• | | |
| -44 | 211-0034-00 | | | 1 | | SCREW,MACHINE:2-56 X 0.50 INCH,PNH | 06950 | ORD BY DESCR |
| -45 | 210-0850-00 | | | 1 | | WASHER,FLAT:0.093 ID X 0.281 INCH OD | 12327 | ORD BY DESCR |
| | 210-0405-00 | | | 1 | | NUT,PLAIN,HEX:2-56 X 0.188,BRS,CD PL | 73743 | 12157-50 |
| | | | | | | ••••••••••••(END ATTACHING PARTS)••••••••• | | |
| -46 | — — | | | 1 | | SWITCH,POWER:(SEE S10 REPL) | | |
| | | | | | | ••••••••••••••(ATTACHING PARTS)•••••••••••• | | |
| -47 | 211-0007-00 | | | 2 | | SCREW,MACHINE:4-40 X 0.188,PNH STL,CD PL | 83385 | ORD BY DESCR |
| | | | | | | ••••••••••••(END ATTACHING PARTS)••••••••• | | |
| -48 | 407-3234-00 | | | 1 | | BRACKET,SWITCH: | 80009 | 407-3234-00 |
| | | | | | | ••••••••••••••(ATTACHING PARTS)•••••••••••• | | |
| -49 | 210-0586-00 | | | 2 | | NUT,PL,ASSEM WA:4-40 X 0.25,STL CD PL | T0435 | ORD BY DESCR |
| | | | | | | ••••••••••••(END ATTACHING PARTS)••••••••• | | |
| | 210-0457-00 | | | 2 | | NUT,PL,ASSEM WA:6-32 X 0.312,STL CD PL | 83385 | ORD BY DESCR |
| | — — | | | - | | (TO SECURE GROUND WIRES) | | |
| -50 | 386-5148-00 | | | 1 | | SUPPORT,INTFC:ALUMINUM | 80009 | 386-5148-00 |
| -51 | 348-0051-00 | | | 1 | | GROMMET,RUBBER:BLACK,ROUND,0.75 ID | 83907 | 1107 |
| -52 | 255-0334-00 | | | AR | | PLASTIC CHANNEL:12.75 X 0.175 X 0.155,NYL | 11897 | 122-37-2500 |
| -53 | 131-0800-03 | | | 2 | | CONTACT,ELEC:PLUG-IN GND,BE NI HT TR | 80009 | 131-0800-03 |
| | | | | | | ••••••••••••••(ATTACHING PARTS)•••••••••••• | | |
| -54 | 211-0007-00 | | | 4 | | SCREW,MACHINE:4-40 X 0.188,PNH STL,CD PL | 83385 | ORD BY DESCR |
| | | | | | | ••••••••••••(END ATTACHING PARTS)••••••••• | | |
| -55 | 131-0799-00 | | | 4 | | CONTACT,ELEC:PLUG-IN GROUND | 80009 | 131-0799-00 |
| | | | | | | ••••••••••••••(ATTACHING PARTS)•••••••••••• | | |
| -56 | 211-0007-00 | | | 4 | | SCREW,MACHINE:4-40 X 0.188,PNH STL,CD PL | 83385 | ORD BY DESCR |
| | | | | | | ••••••••••••(END ATTACHING PARTS)••••••••• | | |
| -57 | 337-2514-00 | | | 2 | | SHIELD,ELEC:INTERFACE CIRCUIT BOARD | 80009 | 337-2514-00 |
| | | | | | | ••••••••••••••(ATTACHING PARTS)•••••••••••• | | |
| -58 | 211-0008-00 | | | 6 | | SCREW,MACHINE:4-40 X 0.250,PNH,STL,POZ | 83385 | ORD BY DESCR |
| | | | | | | ••••••••••••(END ATTACHING PARTS)••••••••• | | |
| -59 | — — | | | 1 | | CIRCUIT BOARD ASSY:MAIN INTFC(SEE A6 REPL) | | |
| | | | | | | ••••••••••••••(ATTACHING PARTS)•••••••••••• | | |
| -60 | 213-0119-00 | | | 9 | | SCR,TPG,THD FOR:4-24 X 0.375 INCH,PNH STL | 83385 | ORD BY DESCR |
| | | | | | | ••••••••••••(END ATTACHING PARTS)••••••••• | | |
| | — — | | | - | | MAIN INTERFACE BOARD INCLUDES: | | |
| -61 | — — | | | 3 | | .CONN,RCPT:(SEE A6J1,J2,J3 REPL) | | |
| | | | | | | .••••••••••••••(ATTACHING PARTS)•••••••••••• | | |
| -62 | 213-0232-00 | | | 6 | | .SCR,TPG,THD FOR:2-32 X 0.312 INCH,PNH STL | 83385 | ORD BY DESCR |
| | | | | | | .•••••••••••(END ATTACHING PARTS)••••••••• | | |



http://manoman.sqhill.com

| Fig. & Index No. | Tektronix Part No. | Serial/Model No. Eff | Dscont | Qty | 1 2 3 4 5 | Name & Description | Mfr Code | Mfr Part Number |
|---|---|---|---|---|---|---|---|---|
| 3-63 | 131-0993-00 | | | 1 | | .BUS,CONDUCTOR:2 WIRE BLACK | 00779 | 850100-01 |
| -64 | 136-0252-07 | | | 3 | | .SOCKET,PIN CONN:W/O DIMPLE | 22526 | 75060-012 |
| -65 | 136-0729-00 | | | 2 | | .SKT,PL-IN ELEK:MICROCKT,16 CONTACT | 09922 | DILB16P-108T |
| | 136-0619-00 | | | 4 | | .SOCKET,PIN TERM:U/W 0.026-0.029 DIA PINS | 00779 | 1-331677-0 |
| -66 | 386-1558-00 | | | 6 | | .SPACER,CKT BD:0.335 H,ACETAL | 80009 | 386-1558-00 |
| -67 | 211-0155-00 | | | 4 | | .SCREW,EXT,RLV B:4-40 X 0.375 INCH,SST | 80009 | 211-0155-00 |
| -68 | — — | | | 3 | | .CONN,RCPT:(SEE A6J78,J201,J202 REPL) | | |
| -69 | 175-9326-00 | | | 1 | | CABLE ASSY,RF:50 OHM COAX,16.0 L,9-0 | 80009 | 175-9326-00 |
| | — — | | | - | | (A6J202 TO A15J202) | | |
| | 175-9487-00 | | | 1 | | CABLE ASSY,RF:50 OHM COAX,16.0 L,9-1 | 80009 | 175-9487-00 |
| | — — | | | - | | (A6J201 TO A15J01) | | |
| -70 | 175-9323-00 | | | 1 | | CA ASSY,SP,ELEC:(2)10,26 AWG,(1)4,26 AWG | T1544 | ORD BY DESCR |
| | — — | | | - | | (A6J75,J46,J47 TO A15J3475,J3446,??) | | |
| -71 | 175-9314-00 | | | 1 | | CA ASSY,SP,ELEC:2,26 AWG,18.0 L,RIBBON | T1544 | ORD BY DESCR |
| | — — | | | - | | (A6J87 TO J81,J83) | | |
| -72 | 175-9318-00 | | | 1 | | CA ASSY,SP,ELEC:8,26 AWG,11.0 L,RIBBON | T1544 | ORD BY DESCR |
| | — — | | | - | | (A6J83 TO A25J83) | | |
| -73 | 175-9316-00 | | | 1 | | CA ASSY,SP,ELEC:7,26 AWG,9.0 L,RIBBON | T1544 | ORD BY DESCR |
| | — — | | | - | | (A6J80 TO A16J680) | | |
| -74 | 175-9325-00 | | | 1 | | CA ASSY,SP,ELEC:10,22 AWG,11.0 L,RIBBON | T1544 | ORD BY DESCR |
| | — — | | | - | | (A6J82 TO A25J82) | | |
| -75 | 175-9440-00 | | | 1 | | CA ASSY,SP,ELEC:20,28 AWG,12.75 L,RIBBON | T1547 | ORD BY DESCR |
| | — — | | | - | | (A6J3,J9 TO A5J303,J309) | | |
| -76 | 175-9320-00 | | | 1 | | CA ASSY,SP,ELEC:9,26 AWG,5.0 L,RIBBON | T1544 | ORD BY DESCR |
| | — — | | | - | | (A6J85 TO A22J1785) | | |
| -77 | 175-9322-00 | | | 1 | | CA ASSY,SP,ELEC:10,26 AWG,12.0 L,RIBBON | T1544 | ORD BY DESCR |
| | — — | | | - | | (A6J89 TO A17J789) | | |
| -78 | 214-2675-00 | | | 4 | | SPRING,CKT BD: | 04811 | ORD BY DESCR |
| | — — | | | - | | (A10 TO A6J3-11,A7 TO A6J3-20,) | | |
| | — — | | | - | | (A11 TO A6J1-11/13,A12 TO A6J2-11/13) | | |
| -79 | — — | | | 1 | | CIRCUIT BOARD ASSY:HORIZ FOL(SEE A10 REPL) | | |
| | — — | | | - | | .(6-1 TO A19J971,6-0 TO A19J970) | | |
| | 210-0775-00 | | | 2 | | .EYELET,METALLIC:0.126 OD X 0.23 INCH L, | 80009 | 210-0775-00 |
| | 210-0800-00 | | | 2 | | .EYELET,METALLIC:0.152 OD X 0.26 L,BRS | 80009 | 210-0800-00 |
| -80 | — — | | | 1 | | CIRCUIT BOARD ASSY:TRIG FOL(SEE A7 REPL) | | |
| | — — | | | - | | .(6-0 TO A14J270,6-1 TO A14J271) | | |
| | 210-0775-00 | | | 2 | | .EYELET,METALLIC:0.126 OD X 0.23 INCH L, | 80009 | 210-0775-00 |
| | 210-0800-00 | | | 2 | | .EYELET,METALLIC:0.152 OD X 0.26 L,BRS | 80009 | 210-0800-00 |
| -81 | — — | | | 2 | | CKT BD ASSY:RT VERT FOL(SEE A11,A12 REPL) | | |
| | — — | | | - | | .(A12:6-0 TO A14J200,6-1 TO A14J201,) | | |
| | — — | | | - | | .(6-2 TO A16J502,6-3 TO A16J503) | | |
| -82 | — — | | | - | | .(A11:6-0 TO A14J400,6-1 TO A14J401,) | | |
| | — — | | | - | | .(6-2 TO A16J602,6-3 TO A16J603) | | |
| | 210-0775-00 | | | 4 | | .EYELET,METALLIC:0.126 OD X 0.23 INCH L, | 80009 | 210-0775-00 |
| | 210-0800-00 | | | 4 | | .EYELET,METALLIC:0.152 OD X 0.26 L,BRS | 80009 | 210-0800-00 |
| -83 | — — | | | 1 | | CIRCUIT BOARD ASSY:LOGIC(SEE A13 REPL) | | |
| -84 | 131-1003-00 | | | 2 | | .CONN,RCPT,ELEC:CKT BD MT,3 PRONG | 80009 | 131-1003-00 |
| | — — | | | - | | .(SEE A13J395,J406 REPL) | | |
| | 136-0252-07 | | | 2 | | .SOCKET,PIN CONN:W/O DIMPLE | 22526 | 75060-012 |
| -85 | 136-0729-00 | | | 2 | | .SKT,PL-IN ELEK:MICROCKT,16 CONTACT | 09922 | DILB16P-108T |
| | 136-0263-07 | | | 20 | | .SOCKET,PIN TERM:U/W 0.025 SQ PIN | 22526 | ORD BY DESCR |
| -86 | 175-9436-00 | | | 1 | | CABLE ASSY,RF:50 OHM COAX,14.0 L,9-5 | 80009 | 175-9436-00 |
| | — — | | | - | | (A13J395 TO J95) | | |
| | 175-6214-00 | | | 1 | | CABLE ASSY,RF:50 OHM COAX,15.0 L,9-6 | 80009 | 175-6214-00 |
| | — — | | | - | | (J406 TO A21J1606) | | |
| -87 | — — | | | 1 | | CIRCUIT BOARD ASSY:TRIG SEL(SEE A14 REPL) | | |
| -88 | — — | | | 7 | | .CONN,RCPT:(SEE A14JXXX REPL) | | |
| -89 | 426-1352-00 | | | 3 | | .FRAME,MICROCKT:1.75 CM,STEPPED | 80009 | 426-1352-00 |
| | | | | | | .**********(ATTACHING PARTS)********** | | |
| -90 | 211-0259-00 | | | 12 | | .SCR,ASSEM WSHR:2-56 X 0.437,PNH,STL CD PL | 78189 | ORD BY DESCR |
| | | | | | | .**********(END ATTACHING PARTS)********** | | |
| -91 | 131-1968-00 | | | 2 | | .CONT SET,ELEC:MICROCKT,1.75 CM,RUBBER | 80009 | 131-1968-00 |
| | — — | | | - | | .(UNDER U274,U492) | | |
| | 131-1968-01 | | | 1 | | .CONT SET,ELEC:MICROCKT,1.75 CM,RUBBER | 80009 | 131-1968-01 |
| | — — | | | - | | .(UNDER U232) | | |



http://manoman.sqhill.com

| Fig. & Index No. | Tektronix Part No. | Serial/Model No. Eff | Dscont | Qty | 1 2 3 4 5 | Name & Description | Mfr Code | Mfr Part Number |
|---|---|---|---|---|---|---|---|---|
| 3-92 | 136-0263-07 | | | 5 | | .SOCKET,PIN TERM:U/W 0.025 SQ PIN | 22526 | ORD BY DESCR |
| -93 | 175-9438-00 | | | 1 | | CABLE ASSY,RF:50 OHM COAX,28.0 L,6-1 | 80009 | 175-9438-00 |
| | — — | | | - | | (A14J496 TO J497) | | |
| -94 | — — | | | 1 | | DELAY LINE:(SEE DL592 REPL) | | |
| | | | | | | **********(ATTACHING PARTS)********** | | |
| -95 | 211-0559-00 | | | 4 | | SCREW,MACHINE:6-32 X 0.375"100 DEG,FLH ST | 83385 | ORD BY DESCR |
| -96 | 211-0507-00 | | | 2 | | SCREW,MACHINE:6-32 X 0.312,PNH STL,CD PL | 83385 | ORD BY DESCR |
| | | | | | | **********(END ATTACHING PARTS)********** | | |
| | — — | | | - | | (6N TO A16J592;6-0 TO A16J694) | | |
| -97 | 407-3272-00 | | | 1 | | BRKT,DLY LINE:ALUMINUM | 80009 | 407-3272-00 |
| | | | | | | **********(ATTACHING PARTS)********** | | |
| -98 | 211-0507-00 | | | 2 | | SCREW,MACHINE:6-32 X 0.312,PNH STL,CD PL | 83385 | ORD BY DESCR |
| | | | | | | **********(END ATTACHING PARTS)********** | | |
| -99 | — — | | | 1 | | CIRCUIT BOARD ASSY:VERT CH SW(SEE A16 REPL | | |
| | | | | | | **********(ATTACHING PARTS)********** | | |
| -100 | 211-0292-00 | | | 4 | | SCR,ASSEM WSHR:4-40 X 0.29,BRS NI PL | 78189 | 51-040445-01 |
| | | | | | | **********(END ATTACHING PARTS)********** | | |
| | — — | | | - | | VERTICAL CHANNEL SWITCH BOARD INCLUDES: | | |
| -101 | 136-0252-00 | | | 6 | | .SOCKET,PIN TERM:U/W 0.019 DIA PINS | 00779 | 2-330808-7 |
| | 214-0668-00 | | | 1 | | .HEAT SINK,ELEC:FOR TO-5 | 13103 | 2211B |
| -102 | 214-2543-00 | | | 1 | | .HT SK,MICROCKT:MICROCIRCUIT,AL | 80009 | 214-2543-00 |
| -103 | 131-1967-01 | | | 1 | | .CONT SET,ELEC:MICROCKT,1.75 CM,RUBBER | 80009 | 131-1967-01 |
| -104 | 426-1351-00 | | | 1 | | .FRAME,MICROCKT:1.75 CM | 80009 | 426-1351-00 |
| | | | | | | .**********(ATTACHING PARTS)********** | | |
| -105 | 211-0259-00 | | | 2 | | .SCR,ASSEM WSHR:2-56 X 0.437,PNH,STL CD PL | 78189 | ORD BY DESCR |
| | | | | | | .**********(END ATTACHING PARTS)********** | | |
| -106 | 211-0260-00 | | | 2 | | SCR,ASSEM WSHR:2-56 X 0.6875 L,PNH,STL CD | 78189 | ORD BY DESCR |
| -107 | 441-1569-00 | | | 1 | | CHASSIS,SCOPE:READOUT | 80009 | 441-1569-00 |
| | | | | | | **********(ATTACHING PARTS)********** | | |
| -108 | 211-0559-00 | | | 4 | | SCREW,MACHINE:6-32 X 0.375"100 DEG,FLH ST | 83385 | ORD BY DESCR |
| | | | | | | **********(END ATTACHING PARTS)********** | | |
| -109 | — — | | | 1 | | CIRCUIT BOARD ASSY READOUT(SEE A15 REPL) | | |
| | | | | | | **********(ATTACHING PARTS)********** | | |
| -110 | 211-0292-00 | | | 4 | | SCR,ASSEM WSHR:4-40 X 0.29,BRS NI PL | 78189 | 51-040445-01 |
| | | | | | | **********(END ATTACHING PARTS)********** | | |
| | — — | | | - | | READOUT BOARD INCLUDES: | | |
| -111 | 136-0729-00 | | | 12 | | .SKT,PL-IN ELEK:MICROCKT,16 CONTACT | 09922 | DILB16P-108T |
| -112 | 136-0728-00 | | | 3 | | .SKT,PL-IN ELEK:MICROCKT,14 CONTACT | 09922 | DILB14P-108 |
| | 136-0252-07 | | | 44 | | .SOCKET,PIN CONN:W/O DIMPLE | 22526 | 75060-012 |
| -113 | — — | | | 5 | | .CONN,RCPT:(SEE A15J3401-J3405 REPL) | | |
| -114 | 175-9310-00 | | | 1 | | CA ASSY,SP,ELEC:4,26 AWG,6.0 L,RIBBON | T1544 | ORD BY DESCR |
| | — — | | | - | | (TO J33) | | |
| | 175-9321-00 | | | 1 | | CA ASSY,SP,ELEC:4,26 AWG,4.0 L,RIBBON | T1544 | ORD BY DESCR |
| | — — | | | - | | (TO J30) | | |
| -115 | 333-3146-00 | | | 1 | | PANEL,REAR: | 80009 | 333-3146-00 |
| | | | | | | **********(ATTACHING PARTS)********** | | |
| -116 | 211-0578-00 | | | 2 | | SCREW,MACHINE:6-32 X 0.438 1NCH,PNH STL | 83385 | ORD BY DESCR |
| | | | | | | **********(END ATTACHING PARTS)********** | | |
| -117 | 200-0678-00 | | | 4 | | COVER,ELEC CONN:BNC,SHORTING | 91836 | KC89-58TR5 |
| -118 | 346-0045-00 | | | 4 | | STRAP,CONN COV:BNC ONE END,POLYPROPYLENE | 80009 | 346-0045-00 |
| -119 | — — | | | 2 | | CONN,RCPT:(SEE J95,J1916 REPL) | | |
| | | | | | | **********(ATTACHING PARTS)********** | | |
| -120 | 220-0413-00 | | | 2 | | NUT,SLEEVE:4-40 X 0.312 HEX X 0.562 | 80009 | 220-0413-00 |
| -121 | 210-0012-00 | | | 2 | | WASHER,LOCK:INTL,0.384 ID,INTL,0.022 TH | 78189 | 1220-02-00-0541C |
| | | | | | | **********(END ATTACHING PARTS)********** | | |
| -122 | 220-0012-00 | | | 2 | | NUT,CPLG,CABLE:0.375-32 X 0.44 HEX,BRASS | 91836 | C-19-139-1M06 |
| | — — | | | - | | (PART OF RF CABLE ASSY) | | |
| -123 | — — | | | 2 | | CONN,RCPT:(SEE J81,J83 REPL) | | |
| | | | | | | **********(ATTACHING PARTS)********** | | |
| -124 | 220-0413-00 | | | 2 | | NUT,SLEEVE:4-40 X 0.312 HEX X 0.562 | 80009 | 220-0413-00 |
| -125 | 210-0012-00 | | | 2 | | WASHER,LOCK:INTL,0.384 ID,INTL,0.022 TH | 78189 | 1220-02-00-0541C |
| | | | | | | **********(END ATTACHING PARTS)********** | | |



http://manoman.sqhill.com

| Fig. & Index No. | Tektronix Part No. | Serial/Model No. Eff | Dscont | Qty | 1 2 3 4 5 | Name & Description | Mfr Code | Mfr Part Number |
|---|---|---|---|---|---|---|---|---|
| 3-126 | — — | | | 2 | | CONN,RCPT:(SEE J30,J33 REPL) | | |
| | | | | | | ••••••••••••••(ATTACHING PARTS)•••••••••••• | | |
| -127 | 220-0551-00 | | | 2 | | NUT,PLAIN,HEX.:9 MM X 0.437 INCH | 73743 | ORD BY DESCR |
| -128 | 210-0012-00 | | | 2 | | WASHER,LOCK:INTL,0.384 ID,INTL,0.022 TH | 78189 | 1220-02-00-0541C |
| | | | | | | ••••••••••••(END ATTACHING PARTS)••••••••• | | |



http://manoman.sqhill.com

| Fig. & Index No. | Tektronix Part No. | Serial/Model No. Eff | Dscont | Qty | 1 2 3 4 5 Name & Description | Mfr Code | Mfr Part Number |
|---|---|---|---|---|---|---|---|
| 4- | 620-0283-01 | B010100 | B029999 | 1 | PWR SUPPLY ASSY: | 80009 | 620-0283-01 |
| | 620-0283-02 | B030000 | | 1 | PWR SUPPLY ASSY: | 80009 | 620-0283-02 |
| | | | | | **********(ATTACHING PARTS)********** | | |
| -1 | 211-0578-00 | | | 4 | SCREW,MACHINE:6-32 X 0.438 1NCH,PNH STL | 83385 | ORD BY DESCR |
| | | | | | **********(END ATTACHING PARTS)********** | | |
| | — — | | | - | POWER SUPPLY INCLUDES: | | |
| -2 | 200-1262-02 | | | 1 | .COVER,PWR SPLY:LEFT SIDE | 80009 | 200-1262-02 |
| | | | | | .**********(ATTACHING PARTS)********** | | |
| -3 | 211-0503-00 | | | 4 | .SCREW,MACHINE:6-32 X 0.188 INCH,PNH STL | 83385 | ORD BY DESCR |
| -4 | 211-0504-00 | | | 2 | .SCREW,MACHINE:6-32 X 0.250,PNH STL,CD PL | 83385 | ORD BY DESCR |
| | | | | | .**********(END ATTACHING PARTS)********** | | |
| -5 | 255-0334-00 | | | AR | .PLASTIC CHANNEL:12.75 X 0.175 X 0.155,NYL | 11897 | 122-37-2500 |
| -6 | 348-0233-00 | | | 1 | .GROMMET,PLASTIC:GRAY,OVAL SHAPE,0.927 ID | 80009 | 348-0233-00 |
| -7 | 351-0279-00 | | | 2 | .GUIDE,SHOE:5.18 X 0.375,NYLON | 80009 | 351-0279-00 |
| -8 | 200-1906-00 | | | 1 | .COVER,PWR SPLY:BOTTOM AND FRONT | 80009 | 200-1906-00 |
| | | | | | .**********(ATTACHING PARTS)********** | | |
| -9 | 211-0503-00 | | | 5 | .SCREW,MACHINE:6-32 X 0.188 INCH,PNH STL | 83385 | ORD BY DESCR |
| | | | | | .**********(END ATTACHING PARTS)********** | | |
| -10 | 200-1263-01 | | | 1 | .COVER,PWR SPLY:RIGHT SIDE | 80009 | 200-1263-01 |
| | | | | | .**********(ATTACHING PARTS)********** | | |
| -11 | 211-0503-00 | | | 1 | .SCREW,MACHINE:6-32 X 0.188 INCH,PNH STL | 83385 | ORD BY DESCR |
| -12 | 211-0507-00 | | | 2 | .SCREW,MACHINE:6-32 X 0.312,PNH STL,CD PL | 83385 | ORD BY DESCR |
| | | | | | .**********(END ATTACHING PARTS)********** | | |
| -13 | — — | | | 2 | .TRANSISTOR:(SEE Q28,Q74 REPL) | | |
| | | | | | .**********(ATTACHING PARTS)********** | | |
| -14 | 210-0406-00 | | | 2 | .NUT,PLAIN,HEX:4-40 X 0.188,BRS,CD PL | 73743 | 12161-50 |
| -15 | 210-1178-00 | | | 2 | .WASHER,SHLDR:U/W T0-220 TRANSISTOR | 49671 | DF 137A |
| -16 | 211-0101-00 | | | 2 | .SCREW,MACHINE:4-40 X 0.25,FLH,100 DEG,STL | 83385 | ORD BY DESCR |
| | | | | | .**********(END ATTACHING PARTS)********** | | |
| -17 | — — | | | 2 | .TRANSISTOR:(SEE Q58,Q94 REPL) | | |
| | | | | | .**********(ATTACHING PARTS)********** | | |
| -18 | 210-0406-00 | | | 2 | .NUT,PLAIN,HEX:4-40 X 0.188,BRS,CD PL | 73743 | 12161-50 |
| -19 | 210-1178-00 | | | 2 | .WASHER,SHLDR:U/W T0-220 TRANSISTOR | 49671 | DF 137A |
| -20 | 211-0101-00 | | | 2 | .SCREW,MACHINE:4-40 X 0.25,FLH,100 DEG,STL | 83385 | ORD BY DESCR |
| | | | | | .**********(END ATTACHING PARTS)********** | | |
| -21 | 342-0202-00 | | | 5 | .INSULATOR,PLATE:TRANSISTOR,MICA | 01295 | 10-21-023-106 |
| -22 | — — | | | 1 | .TRANSISTOR:(SEE Q12 REPL) | | |
| | | | | | .**********(ATTACHING PARTS)********** | | |
| -23 | 210-0406-00 | | | 1 | .NUT,PLAIN,HEX:4-40 X 0.188,BRS,CD PL | 73743 | 12161-50 |
| -24 | 210-1178-00 | | | 1 | .WASHER,SHLDR:U/W T0-220 TRANSISTOR | 49671 | DF 137A |
| -25 | 211-0038-00 | | | 1 | .SCREW,MACHINE:4-40 X 0.312,FLH,100 DEG | 83385 | ORD BY DESCR |
| | | | | | .**********(END ATTACHING PARTS)********** | | |
| -26 | — — | | | 1 | .TRANSISTOR:(SEE Q126 REPL) | | |
| | | | | | .**********(ATTACHING PARTS)********** | | |
| -27 | 210-0406-00 | | | 1 | .NUT,PLAIN,HEX:4-40 X 0.188,BRS,CD PL | 73743 | 12161-50 |
| -28 | 210-1178-00 | | | 1 | .WASHER,SHLDR:U/W T0-220 TRANSISTOR | 49671 | DF 137A |
| -29 | 211-0101-00 | | | 1 | .SCREW,MACHINE:4-40 X 0.25,FLH,100 DEG,STL | 83385 | ORD BY DESCR |
| | | | | | .**********(END ATTACHING PARTS)********** | | |
| -30 | 342-0311-00 | | | 1 | .INSULATOR,PLATE:TRANSISTOR,MICA | 01295 | 64-21-023-212 |
| -31 | — — | | | 1 | .CKT BOARD ASSY:LV REGULATOR(SEE A25 REPL) | | |
| | | | | | .**********(ATTACHING PARTS)********** | | |
| -32 | 211-0008-00 | | | 5 | .SCREW,MACHINE:4-40 X 0.250,PNH,STL,POZ | 83385 | ORD BY DESCR |
| | | | | | .**********(END ATTACHING PARTS)********** | | |
| | — — | | | - | .CKT BOARD ASSY INCLUDES: | | |
| -33 | 131-0608-00 | | | 51 | ..TERMINAL,PIN:0.365 L X 0.025 PH BRZ GOLD | 22526 | 48283-036 |
| -34 | 214-0579-00 | | | 6 | ..TERM,TEST POINT:BRS CD PL | 80009 | 214-0579-00 |
| -35 | 136-0252-07 | | | 24 | ..SOCKET,PIN CONN:W/O DIMPLE | 22526 | 75060-012 |
| -36 | 136-0727-00 | | | 5 | ..SKT,PL-IN ELEK:MICROCKT,8 CONTACT | 09922 | DILB8P-108 |
| -37 | 131-0993-00 | | | 1 | ..BUS,CONDUCTOR:2 WIRE BLACK | 00779 | 850100-01 |
| -38 | — — | | | 1 | ..TRANSISTOR:(SEE Q148 REPL) | | |
| | | | | | ..**********(ATTACHING PARTS)********** | | |
| -39 | 211-0097-00 | | | 1 | ..SCREW,MACHINE:4-40 X 0.312 INCH,PNH STL | 83385 | ORD BY DESCR |
| -40 | 210-0551-00 | | | 1 | ..NUT,PLAIN,HEX.:4-40 X 0.25 INCH,STL | 000BK | ORD BY DESCR |
| -41 | 210-1178-00 | | | 1 | ..WASHER,SHLDR:U/W T0-220 TRANSISTOR | 49671 | DF 137A |
| | | | | | ..**********(END ATTACHING PARTS)********** | | |



http://manoman.sqhill.com

| Fig. & Index No. | Tektronix Part No. | Serial/Model No. Eff | Dscont | Qty | 1 2 3 4 5 | Name & Description | Mfr Code | Mfr Part Number |
|---|---|---|---|---|---|---|---|---|
| 4-42 | 348-0023-00 | | | 1 | | .PLUG,HOLE: | 02768 | 207090201000101 |
| -43 | 441-1490-00 | | | 1 | | .CHASSIS,SCOPE:CIRCUIT BOARD | 80009 | 441-1490-00 |
| | | | | | | .**********(ATTACHING PARTS)********** | | |
| -44 | 211-0008-00 | | | 2 | | .SCREW,MACHINE:4-40 X 0.250,PNH,STL,POZ | 83385 | ORD BY DESCR |
| -45 | 211-0507-00 | | | 3 | | .SCREW,MACHINE:6-32 X 0.312,PNH STL,CD PL | 83385 | ORD BY DESCR |
| | | | | | | .**********(END ATTACHING PARTS)********** | | |
| -46 | —— —— | | | 1 | | .CAPACITOR:(SEE C154 REPL) | | |
| | | | | | | .**********(ATTACHING PARTS)********** | | |
| -47 | 212-0518-00 | | | 2 | | .SCREW,MACHINE:10-32 X 0.312,PNH,STL,CD PL | 83385 | ORD BY DESCR |
| | | | | | | .**********(END ATTACHING PARTS)********** | | |
| -48 | —— —— | | | 1 | | .CKT BOARD ASSY:CONTROL RECT(SEE A24 REPL) | | |
| | | | | | | .**********(ATTACHING PARTS)********** | | |
| -49 | 211-0008-00 | | | 3 | | .SCREW,MACHINE:4-40 X 0.250,PNH,STL,POZ | 83385 | ORD BY DESCR |
| -50 | 211-0504-00 | | | 1 | | .SCREW,MACHINE:6-32 X 0.250,PNH STL,CD PL | 83385 | ORD BY DESCR |
| | | | | | | .**********(END ATTACHING PARTS)********** | | |
| | —— —— | | | - | | .CKT BOARD ASSY INCLUDES: | | |
| -51 | 136-0252-07 | | | 6 | | ..SOCKET,PIN CONN:W/O DIMPLE | 22526 | 75060-012 |
| -52 | 136-0729-00 | | | 1 | | ..SKT,PL-IN ELEK:MICROCKT,16 CONTACT | 09922 | DILB16P-108T |
| -53 | 136-0263-07 | | | 6 | | ..SOCKET,PIN TERM:U/W 0.025 SQ PIN | 22526 | ORD BY DESCR |
| -54 | —— —— | | | 4 | | ..SEMINCOND DEVICE:(SEE CR140,CR141,CR142) | | |
| | —— —— | | | - | | ..AND CR143 REPL) | | |
| | | | | | | ..**********(ATTACHING PARTS)********** | | |
| -55 | 210-0410-00 | | | 4 | | ..NUT,PLAIN,HEX.:10-32 X 0.312 INCH,BRS | 73743 | 2X20003-402 |
| -56 | 210-0056-00 | | | 4 | | ..WASHER,LOCK:SPLIT,0.195 ID X 0.32" OD,P | 86928 | ORD BY DESCR |
| -57 | 210-1003-00 | | | 4 | | ..WASHER,FLAT:# 10 X 0.036 THICK,BRS | 12327 | ORD BY DESCR |
| | | | | | | ..**********(END ATTACHING PARTS)********** | | |
| -58 | 386-1559-00 | | | 2 | | ..SPACER,CKT BD:0.47 H,ACETAL | 80009 | 386-1559-00 |
| -59 | —— —— | | | 1 | | ..SEMICOND DEVICE:(SEE CR151 REPL) | | |
| | | | | | | ..**********(ATTACHING PARTS)********** | | |
| -60 | 211-0012-00 | | | 2 | | ..SCREW,MACHINE:4-40 X 0.375,PNH STL CD PL | 83385 | ORD BY DESCR |
| -61 | 210-0586-00 | | | 2 | | ..NUT,PL,ASSEM WA:4-40 X 0.25,STL CD PL | T0435 | ORD BY DESCR |
| | | | | | | ..**********(END ATTACHING PARTS)********** | | |
| -62 | 342-0567-00 | | | 1 | | ..INSULATOR,PLATE:TRANSISTOR,SILICONE RUBB | 18565 | ORD BY DESCR |
| -63 | 214-2731-00 | | | 1 | | ..HEAT SINK,DIODE:TO-3,AL | 80009 | 214-2731-00 |
| -64 | 136-0254-01 | | | 2 | | ..SOCKET,PIN TERM:U/W 0.031 TO 0.04 DIA PI | 00779 | 1-331892-8 |
| -65 | —— —— | | | 2 | | .CAPACITOR:(SEE C16,C17 REPL) | | |
| | | | | | | .**********(ATTACHING PARTS)********** | | |
| -66 | 212-0518-00 | | | 4 | | .SCREW,MACHINE:10-32 X 0.312,PNH,STL,CD PL | 83385 | ORD BY DESCR |
| -67 | 212-0651-00 | | | 4 | | .SCREW MACHINE:10-32 X 0.312 INCH,PNH,NYLO | 26365 | ORD BY DESCR |
| | 210-3057-00 | | | 4 | | .WASHER,FLAT:0.170 ID X 0.375 OD | 95987 | ORD BY DESCR |
| | | | | | | .**********(END ATTACHING PARTS)********** | | |
| -68 | 342-0419-00 | | | 2 | | .INSULATOR,CAP.: | 80009 | 342-0419-00 |
| -69 | 407-2111-00 | | | 1 | | .BRACKET,CAP.:ALUMINUM | 80009 | 407-2111-00 |
| -70 | 342-0452-00 | B010100 | B030230 | 1 | | .INSULATOR,FILM:CIRCUIT BOARD,POLYMIDE | 80009 | 342-0452-00 |
| -71 | —— —— | | | 1 | | .TRANSFORMER:(SEE T110 REPL) | | |
| | | | | | | .**********(ATTACHING PARTS)********** | | |
| -72 | 211-0008-00 | | | 4 | | .SCREW,MACHINE:4-40 X 0.250,PNH,STL,POZ | 83385 | ORD BY DESCR |
| | | | | | | .**********(END ATTACHING PARTS)********** | | |
| -73 | 348-0023-00 | | | 1 | | .PLUG,HOLE: | 02768 | 207090201000101 |
| -74 | 441-1423-00 | | | 1 | | .CHASSIS,SCOPE:TRANSFORMER | 80009 | 441-1423-00 |
| | | | | | | .**********(ATTACHING PARTS)********** | | |
| -75 | 211-0097-00 | | | 2 | | .SCREW,MACHINE:4-40 X 0.312 INCH,PNH STL | 83385 | ORD BY DESCR |
| | | | | | | .**********(END ATTACHING PARTS)********** | | |
| -76 | 337-1490-02 | | | 1 | | .SHIELD,ELEC:LINE INVERTER,CKT BD BOTTOM | 80009 | 337-1490-02 |
| | | | | | | .**********(ATTACHING PARTS)********** | | |
| -77 | 211-0558-00 | | | 1 | | .SCREW,MACHINE:6-32 X 0.250 BDGH,NYL,SLOT | 26365 | 921-1150-0014 |
| -78 | 210-0055-00 | | | 1 | | .WASHER,LOCK:SPLIT,0.145 ID X 0.253 OD,S | 86928 | ORD BY DESCR |
| -79 | 211-0040-00 | | | 1 | | .SCREW,MACHINE:4-40 X 0.25",BDGH PLSTC | 26365 | 921-1120-0014 |
| -80 | 210-0054-00 | | | 1 | | .WASHER,LOCK:#4 SPLIT,0.025THK STL CD PL | 86928 | ORD BY DESCR |
| | | | | | | .**********(END ATTACHING PARTS)********** | | |
| -81 | 220-0623-00 | | | 1 | | .NUT,BLOCK:0.375 X 0.5 X 0.448,(3)6-32 | 80009 | 220-0623-00 |
| | | | | | | .**********(ATTACHING PARTS)********** | | |
| -82 | 211-0503-00 | | | 1 | | .SCREW,MACHINE:6-32 X 0.188 INCH,PNH STL | 83385 | ORD BY DESCR |
| | | | | | | .**********(END ATTACHING PARTS)********** | | |



http://manoman.sqhill.com

| Fig. & Index No. | Tektronix Part No. | Serial/Model No. Eff | Dscont | Qty | 1 2 3 4 5 | Name & Description | Mfr Code | Mfr Part Number |
|---|---|---|---|---|---|---|---|---|
| 4-83 | — — | | | 1 | | .CKT BOARD ASSY:INVERTER(SEE A23 REPL) | | |
| | | | | | | .**********(ATTACHING PARTS)********** | | |
| -84 | 211-0008-00 | | | 4 | | .SCREW,MACHINE:4-40 X 0.250,PNH,STL,POZ | 83385 | ORD BY DESCR |
| | | | | | | .**********(END ATTACHING PARTS)********** | | |
| | — — | | | - | | .CKT BOARD ASSY INCLUDES: | | |
| -85 | 131-0591-00 | | | 6 | | ..TERMINAL,PIN:0.835L X 0.025 SQ | 22526 | 47352 |
| -86 | 214-1914-00 | | | 1 | | ..HEAT SINK,ELEC: | 98978 | PB1-ZCB |
| | | | | | | ..**********(ATTACHING PARTS)********** | | |
| -87 | 211-0012-00 | | | 1 | | ..SCREW,MACHINE:4-40 X 0.375,PNH STL CD PL | 83385 | ORD BY DESCR |
| -88 | 210-0406-00 | | | 1 | | ..NUT,PLAIN,HEX:4-40 X 0.188,BRS,CD PL | 73743 | 12161-50 |
| | | | | | | ..**********(END ATTACHING PARTS)********** | | |
| -89 | 361-0414-00 | | | 1 | | ..SPACER,DIODE: | 80009 | 361-0414-00 |
| -90 | 346-0032-00 | | | 1 | | ..STRAP,RTNING:0.075 DIA X 4.0 L,MLD RBR | 98159 | 2859-75-4 |
| -91 | 348-0005-00 | | | 1 | | ..GROMMET,RUBBER:0.50 INCH DIA | 70485 | 230 |
| -92 | 129-0323-00 | | | 1 | | ..POST,ELEC-MECH:HEX,0.25 X 1 INCH LONG | 80009 | 129-0323-00 |
| | | | | | | ..**********(ATTACHING PARTS)********** | | |
| -93 | 211-0097-00 | | | 1 | | ..SCREW,MACHINE:4-40 X 0.312 INCH,PNH STL | 83385 | ORD BY DESCR |
| | | | | | | ..**********(END ATTACHING PARTS)********** | | |
| -94 | 386-0016-00 | | | 1 | | ..PLATE,LAMINATIO:KEEPER | 80009 | 386-0016-00 |
| | | | | | | ..**********(ATTACHING PARTS)********** | | |
| -95 | 211-0507-00 | | | 1 | | ..SCREW,MACHINE:6-32 X 0.312,PNH STL,CD PL | 83385 | ORD BY DESCR |
| | | | | | | ..**********(END ATTACHING PARTS)********** | | |
| -96 | 134-0158-00 | | | 4 | | ..BUTTON,PLUG:0.187 DIA,NYLON | 02768 | 207-080501-00 |
| -97 | 337-2533-00 | | | 1 | | .SHIELD,ELEC:LINE INVERT,TOP | 80009 | 337-2533-00 |
| | | | | | | .**********(ATTACHING PARTS)********** | | |
| -98 | 211-0101-00 | | | 4 | | .SCREW,MACHINE:4-40 X 0.25,FLH,100 DEG,STL | 83385 | ORD BY DESCR |
| -99 | 211-0504-00 | | | 2 | | .SCREW,MACHINE:6-32 X 0.250,PNH STL,CD PL | 83385 | ORD BY DESCR |
| | | | | | | .**********(END ATTACHING PARTS)********** | | |
| -100 | 344-0118-00 | | | 2 | | .CLIP,SPG TENS:CAPACITOR MTG | 80033 | E50008-044 |
| | | | | | | .**********(ATTACHING PARTS)********** | | |
| -101 | 210-0586-00 | | | 2 | | .NUT,PL,ASSEM WA:4-40 X 0.25,STL CD PL | T0435 | ORD BY DESCR |
| -102 | 211-0008-00 | | | 2 | | .SCREW,MACHINE:4-40 X 0.250,PNH,STL,POZ | 83385 | ORD BY DESCR |
| | | | | | | .**********(END ATTACHING PARTS)********** | | |
| -103 | — — | | | 2 | | .TRANSISTOR:(SEE Q34,Q40 REPL) | | |
| | | | | | | .**********(ATTACHING PARTS)********** | | |
| -104 | 211-0034-00 | | | 2 | | .SCREW,MACHINE:2-56 X 0.50 INCH,PNH | 06950 | ORD BY DESCR |
| -105 | 210-0053-00 | | | 2 | | .WASHER,LOCK:#2 SPLIT,0.02THK STL CAD PL | | ORD BY DESCR |
| -106 | 210-1008-00 | | | 2 | | .WASHER,FLAT:#8 INTL,0.02THK,STL CD PL | T1741 | 1208 CADMIUM |
| -107 | 342-0421-00 | | | 2 | | .INSULATOR,BSHG:0.089 ID X 0.23 THK,NYLON | 80009 | 342-0421-00 |
| | | | | | | .**********(END ATTACHING PARTS)********** | | |
| -108 | 342-0420-00 | | | 2 | | .INSULATOR,PLATE:TRANSISTOR,PORCELAIN | 80009 | 342-0420-00 |
| -109 | 342-0202-00 | | | 2 | | .INSULATOR,PLATE:TRANSISTOR,MICA | 01295 | 10-21-023-106 |
| -110 | 386-2634-00 | | | 1 | | .PL,CHOKE MTG: | 80009 | 386-2634-00 |
| | | | | | | .**********(ATTACHING PARTS)********** | | |
| -111 | 211-0619-00 | | | 2 | | .SCREW,MACHINE:6-32 X 1.5 INCH,FLH STL | 83385 | ORD BY DESCR |
| | | | | | | .**********(END ATTACHING PARTS)********** | | |
| -112 | 441-1420-00 | | | 1 | | .CHASSIS,SCOPE:LINE INVERT | 80009 | 441-1420-00 |
| | | | | | | .**********(ATTACHING PARTS)********** | | |
| -113 | 213-0041-00 | | | 2 | | .SCR,TPG,THD CTG:6-32 X 0.375 INCH,TRH STL | 83385 | ORD BY DESCR |
| | | | | | | .**********(END ATTACHING PARTS)********** | | |
| -114 | 342-0193-00 | | | 1 | | .INSULATOR,PLATE: | 80009 | 342-0193-00 |
| -115 | 342-0103-00 | | | 1 | | .INSULATOR,BLOCK:HEAT-SINK SHIELD,NYLON | 80009 | 342-0103-00 |
| | | | | | | .**********(ATTACHING PARTS)********** | | |
| -116 | 210-0457-00 | | | 1 | | .NUT,PL,ASSEM WA:6-32 X 0.312,STL CD PL | 83385 | ORD BY DESCR |
| -117 | 211-0512-00 | | | 1 | | .SCREW,MACHINE:6-32 X 0.50" 100 DEG,FLH ST | 83385 | ORD BY DESCR |
| | | | | | | .**********(END ATTACHING PARTS)********** | | |
| -118 | 214-1625-00 | | | 1 | | .SPRING,FLAT:2.0 INCH LONG,BOWED | 80009 | 214-1625-00 |
| -119 | 198-3829-00 | B010100 | B030199 | 1 | | .WIRE SET,ELEC: | 80009 | 198-3829-00 |
| | 198-3829-01 | B030200 | | 1 | | .WIRE SET,ELEC: | 80009 | 198-3829-01 |
| -120 | 352-0161-09 | | | 1 | | ..CONN BODY,PL,EL:3 WIRE WHITE | 80009 | 352-0161-09 |
| | — — | | | - | | ..(A22P99 TO S99) | | |
| -121 | 352-0162-04 | | | 2 | | ..HLDR,TERM CONN:4 WIRE,YELLOW | 80009 | 352-0162-04 |
| | — — | | | 1 | | ..(A22P54 TO A12P54) | | |
| -122 | 352-0163-08 | | | 2 | | ..HLDR,TERM CONN:5 WIRE,GRAY | 80009 | 352-0163-08 |
| | — — | | | - | | ..(A22P48 TO A12P48) | | |



http://manoman.sghill.com

| Fig. & Index No. | Tektronix Part No. | Serial/Model No. Eff | Dscont | Qty | 1 2 3 4 5 | Name & Description | Mfr Code | Mfr Part Number |
|---|---|---|---|---|---|---|---|---|
| 4-123 | 352-0164-02 | | | 2 | | ..HLDR,TERM CONN:6 WIRE,RED | 80009 | 352-0164-02 |
| | —— —— | | | - | | ..(A22P52 TO A12P52) | | |
| -124 | 352-0165-00 | | | 2 | | ..HLDR,TERM CONN:7 WIRE,BLACK | 80009 | 352-0165-00 |
| | —— —— | | | - | | ..(A22P50 TO A12P50) | | |
| -125 | 352-0200-00 | | | 2 | | ..HLDR,TERM CONN:4 WIRE BLACK | 80009 | 352-0200-00 |
| | —— —— | | | - | | ..(A22P50 TO A12P50) | | |
| -126 | 210-0204-00 | | | 1 | | ..TERMINAL,LUG:0.146 INCH DIA DE,45 DEG BE | 78189 | 2157-06-01-2520N |
| -127 | 210-0202-00 | | | 2 | | ..TERMINAL,LUG:0.146 ID,LOCKING,BRZ,TIN PL | 86928 | A-373-158-2 |
| -128 | 131-0707-00 | | | 47 | | ..CONTACT,ELEC:22-26 AWG,BRS & CU BE GOLD | 22526 | 47439-000 |
| -129 | 131-0622-00 | | | 8 | | ..CONTACT,ELEC:0.577"L,28-32 AWG WIRE | 22526 | 46241-000 |
| | 131-0792-00 | | | 8 | | ..CONNECTOR,TERM:18-20 AWG,CU BE GOLD PL | 22526 | 46221 |
| -130 | 131-2065-00 | | | 4 | | ..TERM,QIK DISC:18-22 AWG,BRASS TIN PLATED | 00779 | 2-520181-2 |
| | —— —— | | | - | | ..(TO POWER SWITCH) | | |
| -131 | 210-0307-00 | | | 2 | | ..TERMINAL,LUG:RING,INS,16-14 AWG,#8 | 09922 | BA14E-8M |
| -132 | 175-0826-00 | | | AR | | ..WIRE,ELECTRICAL:3 WIRE RIBBON | 80009 | 175-0826-00 |
| -133 | 175-0827-00 | | | AR | | ..CABLE,SP,ELEC:4,26 AWG,STRD.PVC JKT,RBN | 08261 | 111-2699-954 |
| -134 | 175-0860-00 | | | AR | | ..WIRE,ELECTRICAL:5 WIRE RIBBON | 08261 | SS-0522-7(1061) |
| -135 | 175-0859-00 | | | AR | | ..WIRE,ELECTRICAL:6 WIRE RIBBON | 08261 | SS-0622-7(1061) |
| -136 | 175-0858-00 | | | AR | | ..WIRE,ELECTRICAL:7 WIRE RIBBON | 08261 | SS-0722-7(1061) |
| -137 | 175-1091-00 | | | AR | | ..CABLE,SP,ELEC:(4) #18 STRANDED WIRE | 80009 | 175-1091-00 |
| -138 | 334-3379-01 | | | 1 | | .MARKER,IDENT:MARKED GROUND SYMBOL | 80009 | 334-3379-01 |
| -139 | —— —— | | | 1 | | .SWITCH,SLIDE:(SEE S99 REPL) | | |
| | | | | | | .**********(ATTACHING PARTS)********** | | |
| -140 | 210-0586-00 | | | 2 | | .NUT,PL,ASSEM WA:4-40 X 0.25,STL CD PL | T0435 | ORD BY DESCR |
| -141 | 211-0097-00 | | | 2 | | .SCREW,MACHINE:4-40 X 0.312 INCH,PNH STL | 83385 | ORD BY DESCR |
| | | | | | | .**********(END ATTACHING PARTS)********** | | |
| -142 | 210-0204-00 | | | 1 | | .TERMINAL,LUG:0.146 INCH DIA DE,45 DEG BE | 78189 | 2157-06-01-2520N |
| | | | | | | .**********(ATTACHING PARTS)********** | | |
| -143 | 210-0407-00 | | | 1 | | .NUT,PLAIN,HEX:6-32 X 0.25 INCH,BRS | 73743 | 3038-402 |
| | | | | | | .**********(END ATTACHING PARTS)********** | | |
| -144 | 210-0202-00 | | | 1 | | .TERMINAL,LUG:0.146 ID,LOCKING,BRZ,TIN PL | 86928 | A-373-158-2 |
| | | | | | | .**********(ATTACHING PARTS)********** | | |
| -145 | 210-0407-00 | | | 2 | | .NUT,PLAIN,HEX:6-32 X 0.25 INCH,BRS | 73743 | 3038-402 |
| | | | | | | .**********(END ATTACHING PARTS)********** | | |
| -146 | —— —— | | | 1 | | .SWITCH,SLIDE:(SEE S12 REPL) | | |
| | | | | | | .**********(ATTACHING PARTS)********** | | |
| -147 | 210-0586-00 | | | 2 | | .NUT,PL,ASSEM WA:4-40 X 0.25,STL CD PL | T0435 | ORD BY DESCR |
| -148 | 211-0097-00 | | | 2 | | .SCREW,MACHINE:4-40 X 0.312 INCH,PNH STL | 83385 | ORD BY DESCR |
| | | | | | | .**********(END ATTACHING PARTS)********** | | |
| -149 | 200-2264-00 | | | 1 | | .CAP.,FUSEHOLDER:3AG FUSES | S3629 | FEK 031 1666 |
| -150 | 204-0832-00 | | | 1 | | .BODY,FUSEHOLDER:3AG,5 X 20MM FUSES | S3629 | 031.1673(MDLFEU) |
| -151 | 210-1039-00 | | | 1 | | .WASHER,LOCK:INT,0.521 ID X 0.625 INCH O | 78189 | ORD BY DESCR |
| -152 | —— —— | | | 1 | | .FILTER,RFI:(SEE FL10 REPL) | | |
| | | | | | | .**********(ATTACHING PARTS)********** | | |
| -153 | 210-0586-00 | | | 2 | | .NUT,PL,ASSEM WA:4-40 X 0.25,STL CD PL | T0435 | ORD BY DESCR |
| -154 | 211-0014-00 | | | 2 | | .SCREW,MACHINE:4-40 X 0.50,PHN STL,POZ | 83385 | ORD BY DESCR |
| | | | | | | .**********(END ATTACHING PARTS)********** | | |
| -155 | 214-2932-00 | | | 1 | | .HEAT SINK,ELEC:POWER SUPPLY | 80009 | 214-2932-00 |



http://manoman.sqhill.com

| Fig. & Index No. | Tektronix Part No. | Serial/Model No. Eff | Dscont | Qty | 1 2 3 4 5 | Name & Description | Mfr Code | Mfr Part Number |
|---|---|---|---|---|---|---|---|---|
| | | | | | | STANDARD ACCESSORIES | | |
| 5-1 | 161-0066-00 | | | 1 | | CABLE ASSY,PWR,:3,18 AWG,115V,98.0 L | 16428 | CH8481,FH8481 |
| -2 | 161-0066-09 | | | 1 | | CABLE ASSY,PWR:3,0.75MM SQ,220V,99.0 L | S3109 | 86511000 |
| | —— —— | | | - | | (OPTION A1 ONLY) | | |
| -3 | 161-0066-10 | | | 1 | | CABLE ASSY,PWR:3,0.75MM SQ,240V,96.0 L | S3109 | ORD BY DESCR |
| | —— —— | | | - | | (OPTION A2 ONLY) | | |
| -4 | 161-0066-11 | | | 1 | | CABLE ASSY,PWR:3,0.75MM,240V,96.0L | S3109 | SAA/3-003CCFC3X0 |
| | —— —— | | | - | | (OPTION A3 ONLY) | | |
| -5 | 161-0066-12 | | | 1 | | CABLE ASSY,PWR:3,18 AWG,240V,96.0 L | 70903 | CH-77893 |
| | —— —— | | | - | | (OPTION A4 ONLY) | | |
| -6 | 161-0154-00 | | | 1 | | CABLE ASSY,PWR:3,0.75MM SQ,240V,6A,2.5M L | S3109 | 86515000 |
| | —— —— | | | - | | (OPTION A5 ONLY) | | |
| -7 | 426-0514-00 | | | 1 | | FRAME,MASK:PLASTIC | 80009 | 426-0514-00 |
| | 378-0625-00 | | | 1 | | FILTER,LT,CRT:BLUE,5.15 X 4.4 X 0.03 | 80009 | 378-0625-00 |
| -8 | 351-0375-01 | | | 1 | | SLIDE,DWR,EXT:W/CLOSED MOUNTING SLOTS | 80009 | 351-0375-01 |
| | 361-0806-00 | | | 1 | | SPACER,INSTR:RIGHT | 80009 | 361-0806-00 |
| | 361-0807-00 | | | 1 | | SPACER,INSTR:LEFT | 80009 | 361-0807-00 |
| | 016-0099-00 | | | 1 | | HDW KIT,ELEK EQ:RACKMOUNT HDW | 80009 | 016-0099-00 |
| | 070-5038-00 | | | 1 | | MANUAL,TECH:OPERATORS,R7103 | 80009 | 070-5038-00 |
| | 070-5039-00 | | | 1 | | MANUAL,TECH:INSTRUCTION,R7103 | 80009 | 070-5039-00 |
| | | | | | | OPTIONAL ACCESSORIES | | |
| | 012-0341-00 | | | 1 | | CABLE ASSY:CURRENT PROBE TO OSCP,12.0L | 80009 | 012-0341-00 |



http://manoman.sqhill.com

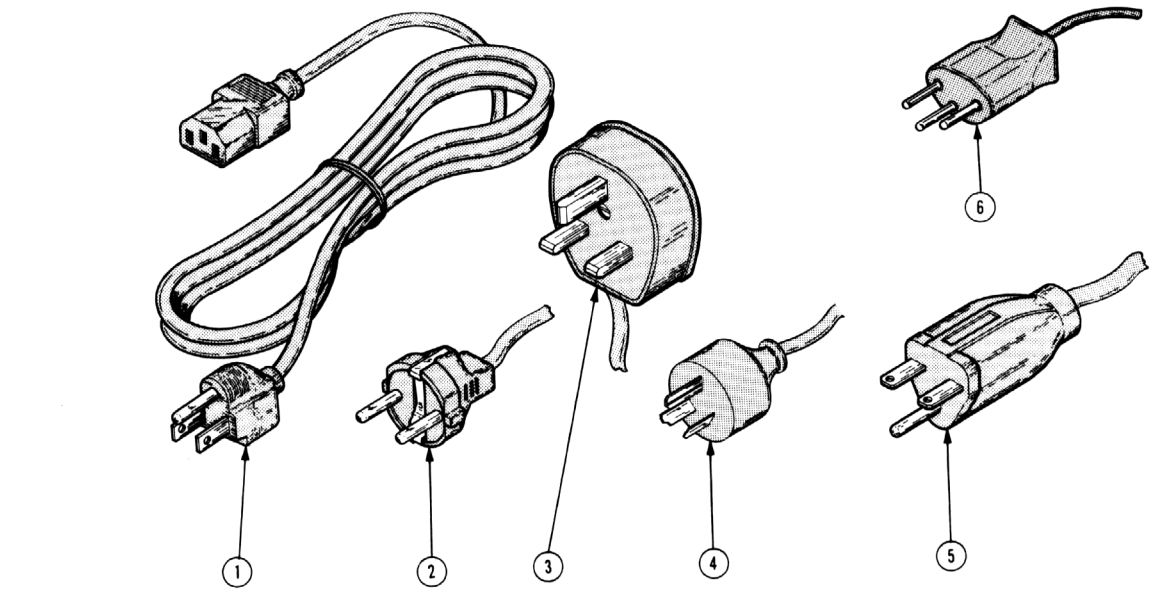


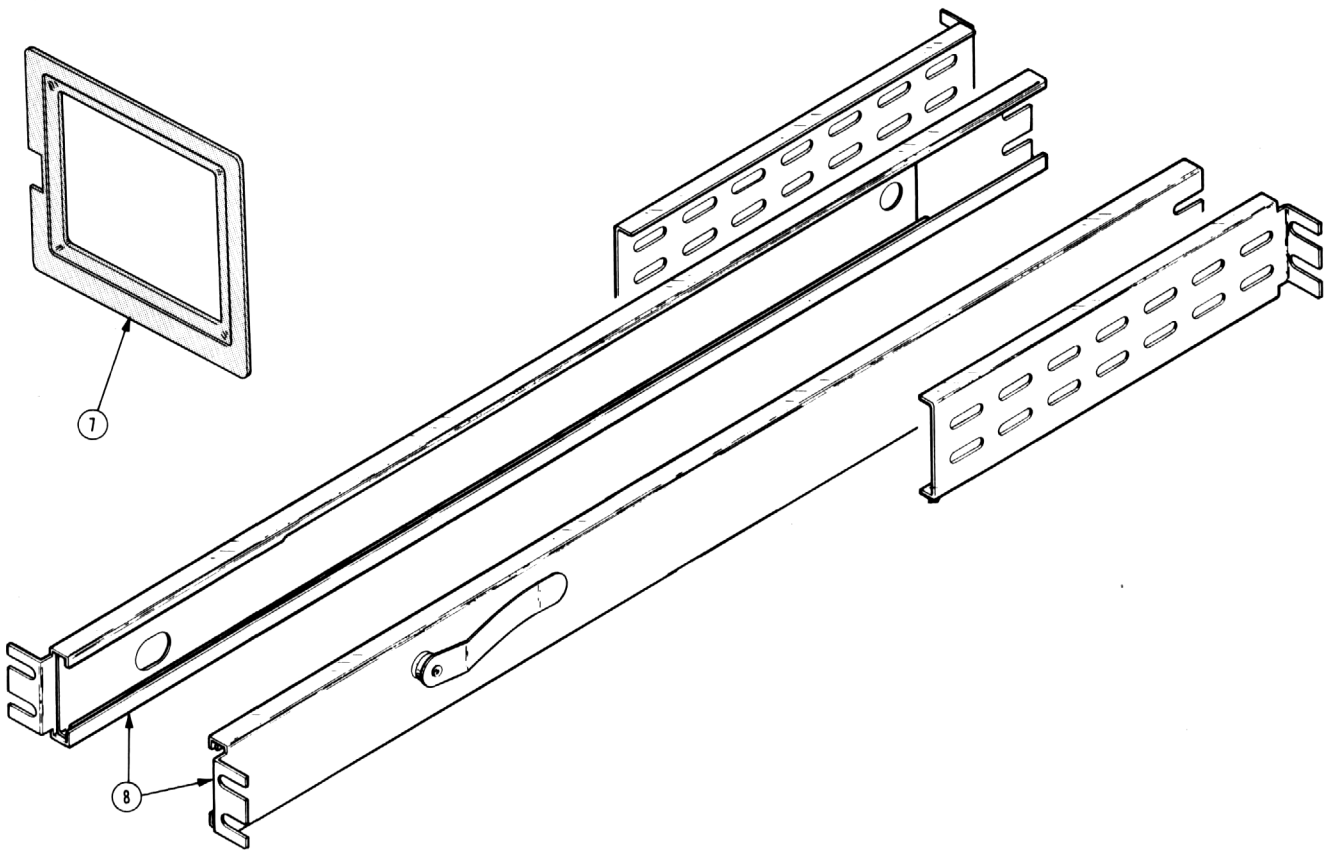


R7103 OSCILLOSCOPE

http://manoman.sqhill.com

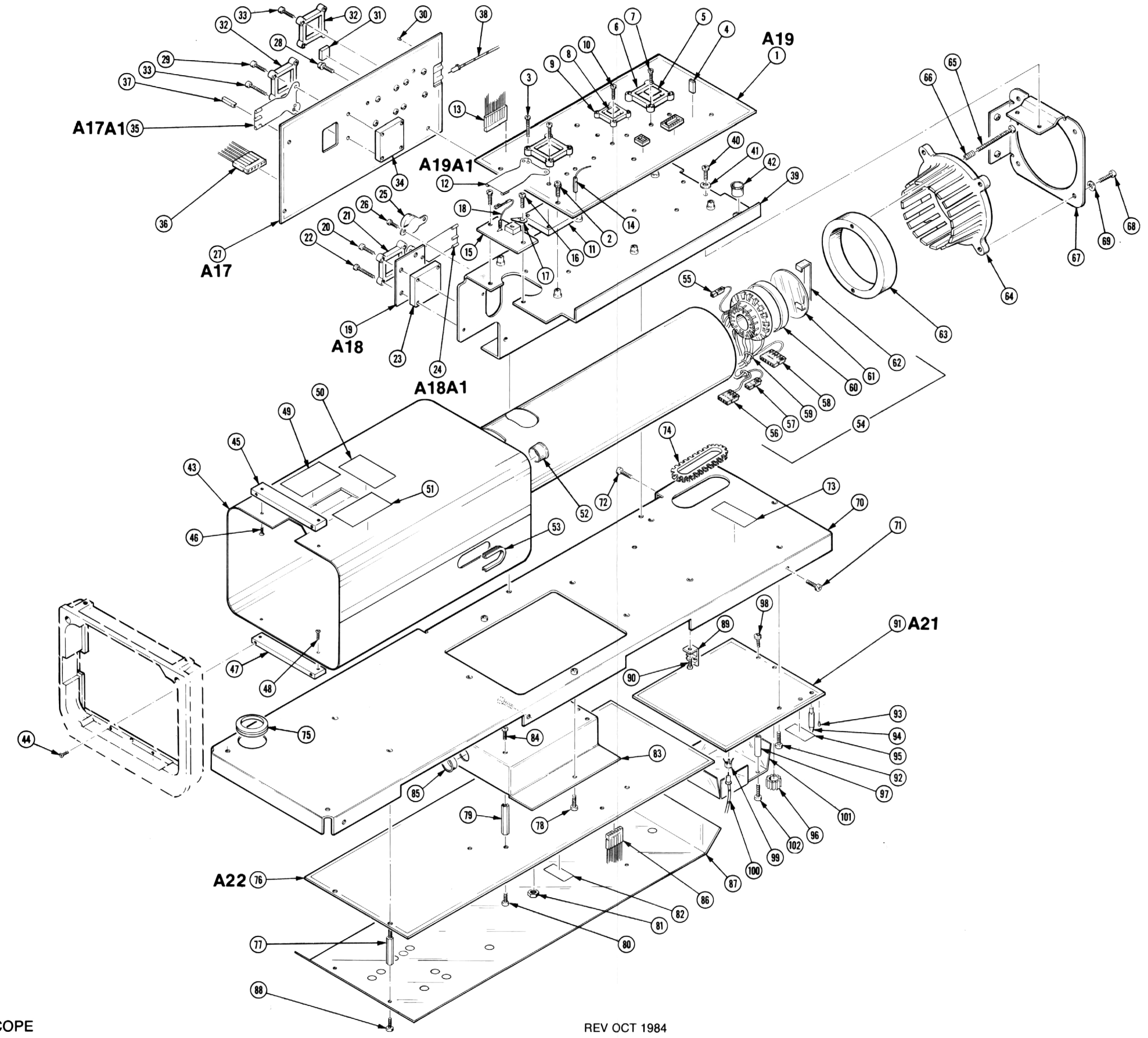


R7103 OSCILLOSCOPE

REV OCT 1984

http://manoman.sqhill.com

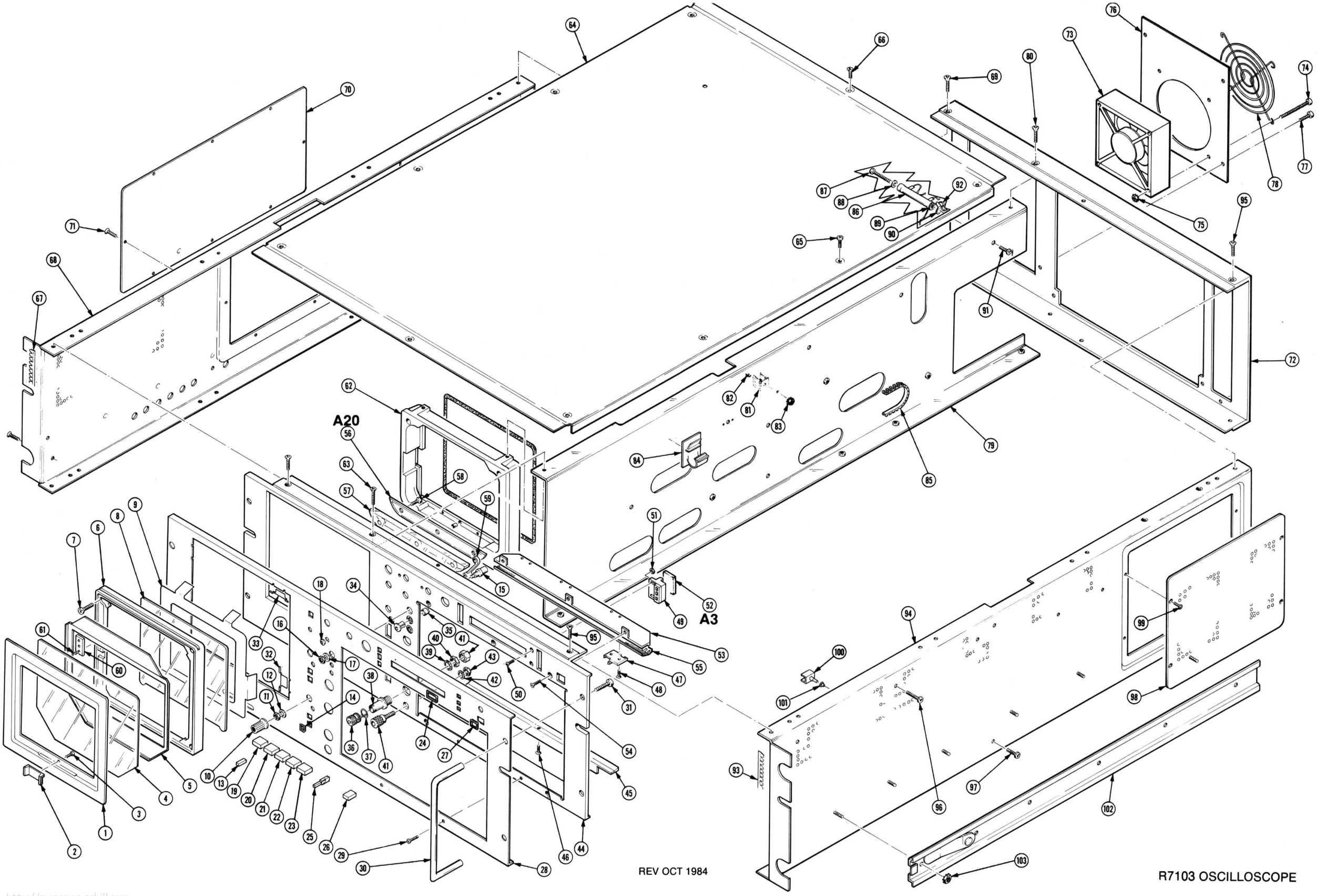


REV OCT 1984

R7103 OSCILLOSCOPE

http://manoman.sqhill.com

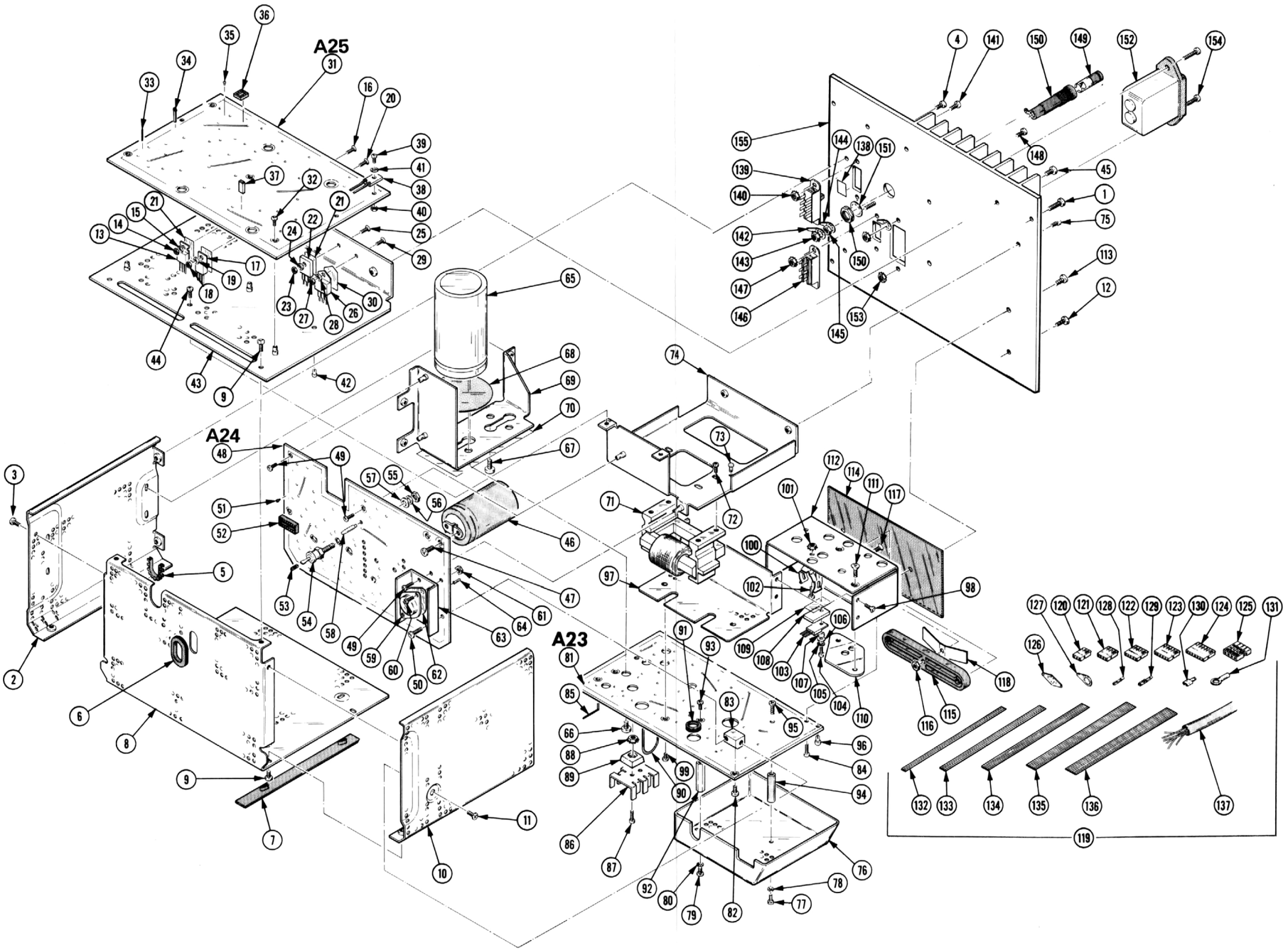
A25
A24
A23

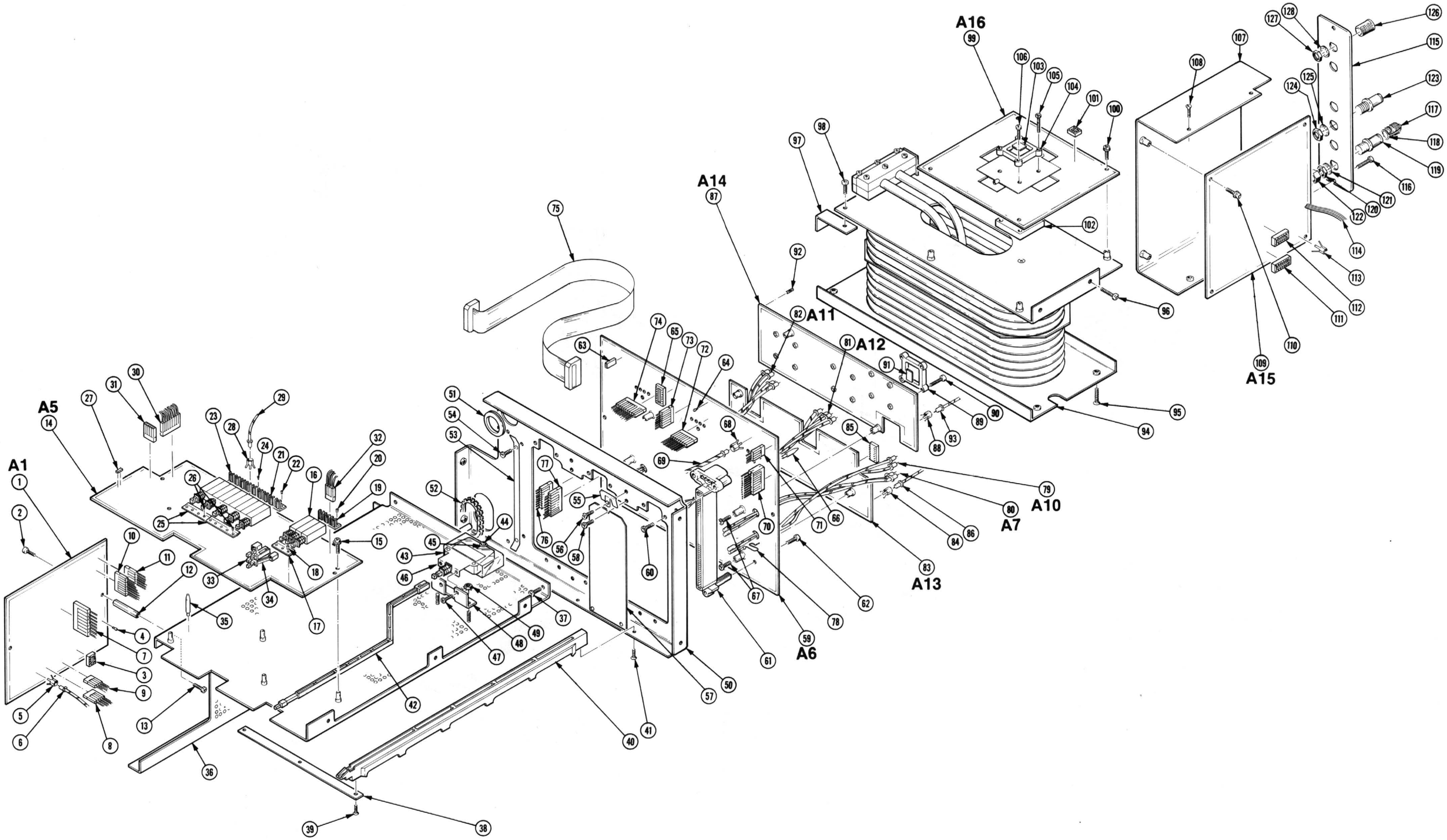


http://manoman.sqhill.com

# MANUAL CHANGE INFORMATION

At Tektronix, we continually strive to keep up with latest electronic developments by adding circuit and component improvements to our instruments as soon as they are developed and tested.

Sometimes, due to printing and shipping requirements, we can't get these changes immediately into printed manuals. Hence, your manual may contain new change information on following pages.

A single change may affect several sections. Since the change information sheets are carried in the manual until all changes are permanently entered, some duplication may occur. If no such change pages appear following this page, your manual is correct as printed.

http://manoman.sqhill.com

Tektronix®
COMMITTED TO EXCELLENCE

# MANUAL CHANGE INFORMATION

**Date:** 5-08-85 **Change Reference:** M57863

**Product:** R7103 **Manual Part No.:** 070-5039-00

**DESCRIPTION** **PG 42**

**Effective at serial number B030365**

## REPLACEABLE ELECTRICAL PARTS LIST CHANGES

**CHANGE TO:**

| | | |
|---|---|---|
| A14 | 670-8409-01 | CKT BOARD ASSY:TRIGGER SELECTOR |

**ADD:**

| | | |
|---|---|---|
| A14C464 | 283-0175-00 | CAP.,FXD,CER DI:10 PF,5%,200V |

## DIAGRAM CHANGES

**Figure 8-7. A14 - Trigger Selector Board assembly.**

Add C464 above R464 (location 1E).

**5 Trigger Selector**

Add C464 in parallel with R464 (location 3E).



http://manoman.sqhifi.com

Tektronix®
COMMITTED TO EXCELLENCE

# MANUAL CHANGE INFORMATION

**Date:** 8/23/85 **Change Reference:** M56169

**Product:** R7103 Oscilloscope **Manual Part No.:** 070-5039-00

**DESCRIPTION** Manual Insert for Product Group 42

**This change is effective at serial number B030490.**

## REPLACEABLE ELECTRICAL PARTS LIST CHANGES

**CHANGE TO:**

| | | |
|---|---|---|
| A24CR161 | 152-0725-00 | SEMICOND DVC,DI:SI,SCHOTTKY,1.2PF |



http://manoman.sghill.com

Tektronix®
COMMITTED TO EXCELLENCE

# MANUAL CHANGE INFORMATION

**Date:** 10/7/85 **Change Reference:** M59082

**Product:** R7103 Oscilloscope **Manual Part No.:** 070-5039-00

**DESCRIPTION** Manual Insert for Product Group 42

**These changes are effective at serial number B030540.**

## REPLACEABLE ELECTRICAL PARTS LIST CHANGES

**CHANGE TO:**

| | | |
|---|---|---|
| A19 | 672-0140-01 | HORIZONTAL AMPLIFIER |
| A19C1036 | 281-0204-00 | CAP.,FXD,PLSTC:2–22PF,100V |

## DIAGRAM CHANGES

**11 Horizontal Amplifier**

Change C1036 (schematic location 4F) from *2–10* to *2–22*.



http://manoman.sqhifi.com

Tektronix®
COMMITTED TO EXCELLENCE

# MANUAL CHANGE INFORMATION

**Date:** 10/24/85 **Change Reference:** M53385/M59099

**Product:** R7103 Oscilloscope **Manual Part No.:** 070-5039-00

**DESCRIPTION** Manual Insert for Product Group 42

**The following changes are effective at serial number B040592.**

*This information details changes to the R7103 Instruction Manual made necessary by modifications to the R7103 Readout and Main Interface circuit board assemblies.*

## REPLACEABLE ELECTRICAL PARTS LIST CHANGES

The following parts list is for the new A15 Readout circuit board assembly. These part numbers supercede the part numbers given in the manual for the old Readout circuit board assembly. They are to be used in conjunction with the new schematic and parts locator diagrams found in the DIAGRAM CHANGES section of this Manual Change Information insert.

| | | |
|---|---|---|
| A15 | 670-8620-01 | CKT BOARD ASSY:READOUT |
| A15C3415 | 290-0804-01 | CAP.,FXD,ELCTLT:10UF,20%,50VDC,AL |
| A15C3417 | 290-0920-01 | CAP.,FXD,ELCTLT:33UF,20%,35V,AL |
| A15C3418 | 290-0804-01 | CAP.,FXD,ELCTLT:10UF,20%,50VDC,AL |
| A15C3420 | 281-0862-00 | CAP.,FXD,CER DI:0.001UF,+80-20%,100V |
| A15C3421 | 281-0773-00 | CAP.,FXD,CER DI:0.01UF,10%,100V |
| A15C3427 | 281-0773-00 | CAP.,FXD,CER DI:0.01UF,10%,100V |
| A15C3435 | 285-0698-00 | CAP.,FXD,PLASTIC:0.0082UF,5%,100V |
| A15C3440 | 281-0816-00 | CAP.,FXD,CER DI:82PF,5%,100V |
| A15C3444 | 281-0810-00 | CAP.,FXD,CER DI:5.6PF,+/-0.5PF,100V |
| A15C3454 | 283-0728-00 | CAP.,FXD,MICA DI:120PF,1%,500V |
| A15C3454 | ----- ----- | (NOMINAL VALUE, SELECTED) |
| A15C3454 | 283-0630-00 | CAP.,FXD,MICA DI:110PF,1%,500V |
| A15C3454 | ----- ----- | (SELECTED AS NEEDED) |
| A15C3454 | 283-0796-00 | CAP.,FXD,MICA DI:100PF,5%,500V |
| A15C3454 | ----- ----- | (SELECTED AS NEEDED) |
| A15C3454 | 283-0644-00 | CAP.,FXD,MICA DI:150PF,1%,500V |
| A15C3454 | ----- ----- | (SELECTED AS NEEDED) |
| A15C3455 | 281-0158-00 | CAP.,VAR,CER DI:7-45PF,25V |
| A15C3457 | 281-0773-00 | CAP.,FXD,CER DI:0.01UF,10%,100V |
| A15C3461 | 281-0765-00 | CAP.,FXD,CER DI:100PF,5%,100V |
| A15C3483 | 281-0788-00 | CAP.,FXD.CER DI:470PF,10%,100V |
| A15C3485 | 281-0774-00 | CAP.,FXD.CER DI:0.022UF,20%,100V |
| A15C3487 | 281-0773-00 | CAP.,FXD,CER DI:0.01UF,10%,100V |
| A15C3501 | 283-0114-00 | CAP.,FXD,CER DI:1500PF,5%,200V |
| A15C3502 | 281-0773-00 | CAP.,FXD,CER DI:0.01UF,10%,100V |
| A15C3503 | 281-0773-00 | CAP.,FXD,CER DI:0.01UF,10%,100V |



http://manoman.sghill.com

| | | DESCRIPTION |
|---|---|---|
| A15C3504 | 281-0773-00 | CAP.,FXD,CER DI:0.01UF,10%,100V |
| A15C3511 | 281-0762-00 | CAP.,FXD,CER DI:27PF,20%,100V |
| A15C3512 | 283-0666-00 | CAP.,FXD,MICA DI:890PF,2%,100V |
| A15C3513 | 283-0640-00 | CAP.,FXD,MICA DI:160PF,1%,100V |
| A15C3521 | 281-0788-00 | CAP.,FXD.CER DI:470PF,10%,100V |
| A15C3539 | 281-0788-00 | CAP.,FXD.CER DI:470PF,10%,100V |
| A15C3544 | 281-0774-00 | CAP.,FXD.CER DI:0.022UF,20%,100V |
| A15C3546 | 281-0773-00 | CAP.,FXD,CER DI:0.01UF,10%,100V |
| A15C3551 | 281-0773-00 | CAP.,FXD,CER DI:0.01UF,10%,100V |
| A15C3559 | OPEN | (NOMINAL VALUE, SELECTED) |
| A15C3563 | 281-0773-00 | CAP.,FXD,CER DI:0.01UF,10%,100V |
| A15C3564 | 281-0773-00 | CAP.,FXD,CER DI:0.01UF,10%,100V |
| A15C3576 | 281-0762-00 | CAP.,FXD,CER DI:27PF,20%,100V |
| A15C3577 | 283-0666-00 | CAP.,FXD,MICA DI:890PF,2%,100V |
| A15C3579 | 283-0640-00 | CAP.,FXD,MICA DI:160PF,1%,100V |
| A15C3597 | OPEN | (NOMINAL VALUE, SELECTED) |
| A15CR3424 | 152-0141-02 | SEMICOND DVC,DI:SW,SI,30V,150MA |
| A15CR3425 | 152-0141-02 | SEMICOND DVC,DI:SW,SI,30V,150MA |
| A15CR3437 | 152-0141-02 | SEMICOND DVC,DI:SW,SI,30V,150MA |
| A15CR3439 | 152-0141-02 | SEMICOND DVC,DI:SW,SI,30V,150MA |
| A15CR3445 | 152-0141-02 | SEMICOND DVC,DI:SW,SI,30V,150MA |
| A15CR3446 | 152-0141-02 | SEMICOND DVC,DI:SW,SI,30V,150MA |
| A15CR3453 | 152-0141-02 | SEMICOND DVC,DI:SW,SI,30V,150MA |
| A15CR3457 | 152-0141-02 | SEMICOND DVC,DI:SW,SI,30V,150MA |
| A15CR3461 | 152-0141-02 | SEMICOND DVC,DI:SW,SI,30V,150MA |
| A15CR3462 | 152-0141-02 | SEMICOND DVC,DI:SW,SI,30V,150MA |
| A15CR3487 | 152-0141-02 | SEMICOND DVC,DI:SW,SI,30V,150MA |
| A15CR3529 | 152-0141-02 | SEMICOND DVC,DI:SW,SI,30V,150MA |
| A15CR3550 | 152-0141-02 | SEMICOND DVC,DI:SW,SI,30V,150MA |
| A15CR3570 | 152-0141-02 | SEMICOND DVC,DI:SW,SI,30V,150MA |
| A15CR3571 | 152-0141-02 | SEMICOND DVC,DI:SW,SI,30V,150MA |
| A15E3440 | 276-0532-00 | SHLD BEAD,ELEK:FERRITE,0.138 OD X 0.047 ID X 0.118 |
| A15J3401 | 136-0252-07 | SOCKET,PIN,CONN:W/O DIMPLE |
| A15J3401 | 131-1003-00 | CONN,RCPT,ELEC:CKT BD MT,3 PRONG |
| A15J3402 | 136-0252-07 | SOCKET,PIN,CONN:W/O DIMPLE |
| A15J3402 | 131-1003-00 | CONN,RCPT,ELEC:CKT BD MT,3 PRONG |
| A15J3432 | 136-0252-07 | SOCKET,PIN,CONN:W/O DIMPLE |
| A15J3432 | 131-1003-00 | CONN,RCPT,ELEC:CKT BD MT,3 PRONG |
| A15J3596 | 136-0252-07 | SOCKET,PIN,CONN:W/O DIMPLE |
| A15J3596 | 131-1003-00 | CONN,RCPT,ELEC:CKT BD MT,3 PRONG |
| A15J3599 | 131-0252-07 | SOCKET,PIN,CONN:W/O DIMPLE |
| A15J3599 | 136-1003-00 | CONN,RCPT,ELEC:CKT BD MT,3 PRONG |
| A15L3512 | 108-0800-00 | COIL,RF:FIXED,820UH |
| A15L3577 | 108-0800-00 | COIL,RF:FIXED,820UH |



http://manoman.sqnit.com

| | | DESCRIPTION |
|---|---|---|
| A15P3446 | 258-0534-00 | WIRE,NONELECTRIC:0.025 THK X 0.025W |
| A15P3467 | 258-0534-00 | WIRE,NONELECTRIC:0.025 THK X 0.025W |
| A15P3475 | 258-0534-00 | WIRE,NONELECTRIC:0.025 THK X 0.025W |
| A15P3484 | 131-0993-00 | BUS,CONDUCTOR:SHUNT ASSEMBLY,BLACK |
| A15P3484 | 258-0534-00 | WIRE,NONELECTRIC:0.025THK X 0.025 WIDE |
| A15Q3431 | 151-0190-00 | TRANSISTOR:SILICON,NPN |
| A15Q3432 | 151-0190-00 | TRANSISTOR:SILICON,NPN |
| A15Q3438 | 151-0188-00 | TRANSISTOR:SILICON,PNP |
| A15Q3442 | 151-0190-00 | TRANSISTOR:SILICON,NPN |
| A15Q3451 | 151-0190-00 | TRANSISTOR:SILICON,NPN |
| A15Q3452 | 151-0190-00 | TRANSISTOR:SILICON,NPN |
| A15Q3453 | 151-0190-00 | TRANSISTOR:SILICON,NPN |
| A15Q3481 | 151-0188-00 | TRANSISTOR:SILICON,PNP |
| A15Q3489 | 151-0190-00 | TRANSISTOR:SILICON,NPN |
| A15Q3523 | 151-0232-00 | TRANSISTOR:SILICON,NPN |
| A15Q3526 | 151-0190-00 | TRANSISTOR:SILICON,NPN |
| A15Q3527 | 151-0190-00 | TRANSISTOR:SILICON,NPN |
| A15Q3529 | 151-0188-00 | TRANSISTOR:SILICON,PNP |
| A15Q3543 | 151-0190-00 | TRANSISTOR:SILICON,NPN |
| A15Q3550 | 151-0188-00 | TRANSISTOR:SILICON,PNP |
| A15Q3555 | 151-1021-00 | TRANSISTOR:SILICON,FET,N-CHAN |
| A15Q3596 | 151-1021-00 | TRANSISTOR:SILICON,FET,N-CHAN |
| A15R3401 | 315-0512-00 | RES.,FXD,CMPSN:5.1K OHM,5%,0.25W |
| A15R3422 | 315-0432-00 | RES.,FXD,CMPSN:4.3K OHM,5%,0.25W |
| A15R3435 | 315-0393-00 | RES.,FXD,CMPSN:39K OHM,5%,0.25W |
| A15R3423 | 315-0683-00 | RES.,FXD,CMPSN:68K OHM,5%,0.25W |
| A15R3427 | 315-0102-00 | RES.,FXD,CMPSN:1K OHM,5%,0.25W |
| A15R3431 | 315-0472-00 | RES.,FXD,CMPSN:4.7K OHM,5%,0.25W |
| A15R3432 | 315-0222-00 | RES.,FXD,CMPSN:2.2K OHM,5%,0.25W |
| A15R3434 | 315-0302-00 | RES.,FXD,CMPSN:3K OHM,5%,0.25W |
| A15R3435 | 315-0393-00 | RES.,FXD,CMPSN:39K OHM,5%,0.25W |
| A15R3437 | 315-0752-00 | RES.,FXD,CMPSN:7.5K OHM,5%,0.25W |
| A15R3439 | 315-0242-00 | RES.,FXD,CMPSN:2.4K OHM,5%,0.25W |
| A15R3440 | 315-0103-00 | RES.,FXD,CMPSN:10K OHM,5%,0.25W |
| A15R3441 | 315-0102-00 | RES.,FXD,CMPSN:1K OHM,5%,0.25W |
| A15R3442 | 315-0472-00 | RES.,FXD,CMPSN:4.7K OHM,5%,0.25W |
| A15R3444 | 315-0104-00 | RES.,FXD,CMPSN:100K OHM,5%,0.25W |
| A15R3446 | 315-0152-00 | RES.,FXD,CMPSN:1.5K OHM,5%,0.25W |
| A15R3450 | 315-0183-00 | RES.,FXD,CMPSN:18K OHM,5%,0.25W |
| A15R3451 | 315-0362-00 | RES.,FXD,CMPSN:3.6K OHM,5%,0.25W |
| A15R3452 | 315-0622-00 | RES.,FXD,CMPSN:6.2K OHM,5%,0.25W |
| A15R3453 | 315-0301-00 | RES.,FXD,CMPSN:300 OHM,5%,0.25W |



http://manuals.hp.com

## DESCRIPTION

| | | |
|---|---|---|
| A15R3454 | 321-0350-00 | RES.,FXD,FILM:43.2K OHM,1%,0.125W |
| A15R3455 | 321-0350-00 | RES.,FXD,FILM:43.2K OHM,1%,0.125W |
| A15R3457 | 315-0222-00 | RES.,FXD,CMPSN:2.2K OHM,5%,0.25W |
| A15R3481 | 321-0386-00 | RES.,FXD,FILM:102K OHM,1%,0.125W |
| A15R3482 | 321-0361-00 | RES.,FXD,FILM:56.2K OHM,1%,0.125W |
| A15R3483 | 311-2230-00 | RES.,VAR,NONWW,TRMR:500 OHM,20% |
| A15R3484 | 321-0262-00 | RES.,FXD,FILM:5.23K,1%,0.125W |
| A15R3485 | 307-0445-00 | RES NTWK,FXD,FI:(9)4.7K OHM,20% |
| A15R3486 | 315-0241-00 | RES.,FXD,CMPSN:240 OHM,5%,0.25W |
| A15R3487 | 315-0102-00 | RES.,FXD,CMPSN:1K OHM,5%,0.25W |
| A15R3488 | 315-0203-00 | RES.,FXD,CMPSN:20K OHM,5%,0.25W |
| A15R3489 | 315-0472-00 | RES.,FXD,CMPSN:4.7K OHM,5%,0.25W |
| A15R3501 | 315-0471-00 | RES.,FXD,CMPSN:470 OHM,5%,0.25W |
| A15R3502 | 315-0182-00 | RES.,FXD,CMPSN:1.8K OHM,5%,0.25W |
| A15R3503 | 315-0511-00 | RES.,FXD,CMPSN:510 OHM,5%,0.25W |
| A15R3504 | 307-0446-00 | RES NTWK,FXD,FI:(9)10K OHM,20% |
| A15R3506 | 321-0376-00 | RES.,FXD,FILM:80.6K OHM,1%,0.125W |
| A15R3507 | 321-0405-00 | RES.,FXD,FILM:162K OHM,1%,0.125W |
| A15R3508 | 321-0434-00 | RES.,FXD,FILM:324K OHM,1%,0.125W |
| A15R3510 | 311-2232-00 | RES.,VAR,NONWW:TRMR,2K OHM,20%,0.5W |
| A15R3511 | 315-0332-00 | RES.,FXD,CMPSN:3.3K OHM,5%,0.25W |
| A15R3512 | 321-0218-00 | RES.,FXD,FILM:1.82K OHM,1%,0.125W |
| A15R3513 | 321-0221-00 | RES.,FXD,FILM:1.96K OHM,1%,0.125W |
| A15R3516 | 321-0396-00 | RES.,FXD,FILM:130K OHM,1%,0.125W |
| A15R3517 | 321-0425-00 | RES.,FXD,FILM:261K OHM,1%,0.125W |
| A15R3518 | 321-0452-00 | RES.,FXD,FILM:499K OHM,1%,0.125W |
| A15R3522 | 315-0133-00 | RES.,FXD,CMPSN:13K OHM,5%,0.25W |
| A15R3523 | 315-0124-00 | RES.,FXD,CMPSN:120K OHM,5%,0.25W |
| A15R3524 | 315-0751-00 | RES.,FXD,CMPSN:750 OHM,5%,0.25W |
| A15R3525 | 321-0299-00 | RES.,FXD,FILM:12.7K OHM,1%,0.125W |
| A15R3526 | 321-0212-00 | RES.,FXD,FILM:1.58K OHM,1%,0.125W |
| A15R3527 | 315-0152-00 | RES.,FXD,CMPSN:1.5K OHM,5%,0.25W |
| A15R3529 | 315-0512-00 | RES.,FXD,CMPSN:5.1K OHM,5%,0.25W |
| A15R3530 | 315-0103-00 | RES.,FXD,CMPSN:10K OHM,5%,0.25W |
| A15R3535 | 315-0203-00 | RES.,FXD,CMPSN:20K OHM,5%,0.25W |
| A15R3536 | 315-0203-00 | RES.,FXD,CMPSN:20K OHM,5%,0.25W |
| A15R3537 | 315-0203-00 | RES.,FXD,CMPSN:20K OHM,5%,0.25W |
| A15R3538 | 315-0203-00 | RES.,FXD,CMPSN:20K OHM,5%,0.25W |
| A15R3539 | 315-0303-00 | RES.,FXD,CMPSN:30K OHM,5%,0.25W |
| A15R3542 | 321-0259-00 | RES.,FXD,FILM:4.87K OHM,1%,0.125W |
| A15R3543 | 311-2230-00 | RES.,VAR,NONWW:TRMR,500 OHM,20% |
| A15R3544 | 321-0326-00 | RES.,FXD,FILM:24.3K OHM,1%,0.125W |
| A15R3545 | 315-0472-00 | RES.,FXD,CMPSN:4.7K OHM,5%,0.25W |
| A15R3546 | 307-0445-00 | RES NTWK,FXD,FI:(9)4.7K OHM,20% |
| A15R3550 | 315-0222-00 | RES.,FXD,CMPSN:2.2K OHM,5%,0.25W |
| A15R3551 | 315-0203-00 | RES.,FXD,CMPSN:20K OHM,5%,0.25W |


http://manoman.sqhill.com

| | | DESCRIPTION |
|---|---|---|
| A15R3552 | 321-0202-00 | RES.,FXD,FILM:1.24K OHM,1%,0.125W |
| A15R3553 | 321-0202-00 | RES.,FXD,FILM:1.24K OHM,1%,0.125W |
| A15R3554 | 321-0254-00 | RES.,FXD,FILM:4.32K OHM,1%,0.125W |
| A15R3555 | 321-0301-00 | RES.,FXD,FILM:13.3K OHM,1%,0.125W |
| A15R3557 | 321-0251-00 | RES.,FXD,FILM:4.02K OHM,1%,0.125W |
| A15R3558 | 315-0203-00 | RES.,FXD,CMPSN:20K OHM,5%,0.25W |
| A15R3559 | 315-0272-00 | RES.,FXD,CMPSN:2.7K OHM,5%,0.25W |
| A15R3560 | 311-2232-00 | RES.,VAR,NONWW:TRMR,2K OHM,20%,0.5W |
| A15R3563 | 307-0696-00 | RES.,NTWK,FXD,FI:(7)10K OHM,2%,0.15W |
| A15R3564 | 321-0318-00 | RES.,FXD,FILM:20.0K OHM,1%,0.125W |
| A15R3565 | 321-0259-00 | RES.,FXD,FILM:4.87K OHM,1%,0.125W |
| A15R3566 | 321-0430-00 | RES.,FXD,FILM:294K OHM,1%,0.125W |
| A15R3567 | 321-0399-00 | RES.,FXD,FILM:140K OHM,1%,0.125W |
| A15R3568 | 321-0367-00 | RES.,FXD,FILM:64.9K OHM,1%,0.125W |
| A15R3569 | 321-0331-00 | RES.,FXD,FILM:27.4K OHM,1%,0.125W |
| A15R3571 | 315-0183-00 | RES.,FXD,CMPSN:18K OHM,5%,0.25W |
| A15R3576 | 321-0251-00 | RES.,FXD,FILM:4.02K OHM,1%,0.125W |
| A15R3577 | 321-0218-00 | RES.,FXD,FILM:1.82K OHM,1%,0.125W |
| A15R3579 | 321-0221-00 | RES.,FXD,FILM:1.96K OHM,1%,0.125W |
| A15R3580 | 321-0254-00 | RES.,FXD,FILM:4.32K OHM,1%,0.125W |
| A15R3586 | 307-0651-00 | RES NTWK,FXD,FI:(5)3.3K OHM,5%,0.15W |
| A15R3588 | 321-0353-00 | RES.,FXD,FILM:46.4K OHM,1%,0.125W |
| A15R3589 | 321-0335-00 | RES.,FXD,FILM:30.1K OHM,1%,0.125W |
| A15R3590 | 321-0321-00 | RES.,FXD,FILM:21.5K OHM,1%,0.125W |
| A15R3591 | 321-0310-00 | RES.,FXD,FILM:16.5K OHM,1%,0.125W |
| A15R3592 | 321-0301-00 | RES.,FXD,FILM:13.3K OHM,1%,0.125W |
| A15R3593 | 321-0304-00 | RES.,FXD,FILM:14.3K OHM,1%,0.125W |
| A15R3596 | 321-0251-00 | RES.,FXD,FILM:4.02K OHM,1%,0.125W |
| A15R3597 | 321-0254-00 | RES.,FXD,FILM:4.32K OHM,1%,0.125W |
| A15R3598 | 315-0203-00 | RES.,FXD,CMPSN:20K OHM,5%,0.25W |
| A15U3420 | 156-0043-03 | MICROCKT,DGTL:QUAD 2-INP NOR GATE |
| A15U3426 | 155-0021-01 | MICROCKT,DGTL:SCAN OSCILLATOR & LOGIC |
| A15U3427 | 156-1172-01 | MICROCKT,DGTL:DUAL 4 BIT BIN CNTR |
| A15U3457 | 156-0730-02 | MICROCKT,DGTL:QUAD 2-INP NOR BFR |
| A15U3459 | 155-0017-00 | MICROCKT,DGTL:BCD DECIMAL |
| A15U3462 | 156-0388-03 | MICROCKT,DGTL:DUAL D FLIP-FLOP |
| A15U3485 | 155-0014-01 | MICROCKT,DGTL:A-D CONVERTER |
| A15U3486 | 156-1177-01 | MICROCKT,DGTL:STET LINE PRIORITY ENCODER |
| A15U3502 | 156-1172-01 | MICROCKT,DGTL:DUAL 4 BIT BIN CNTR |
| A15U3503 | 160-2997-00 | MICROCKT,DGTL:4096 X 8 EPROM,PRGM |



http://manuals.tm.com

## DESCRIPTION

| | | |
|---|---|---|
| A15U3504 | 156-0865-02 | MICROCKT,DGTL:OCTAL D FF W/CLEAR |
| A15U3510 | 156-1191-00 | MICROCKT,LINEAR:DUAL BI-FET OPNL AMPL |
| A15U3532 | 155-0018-00 | MICROCKT,DGTL:ZERO LOGIC |
| A15U3544 | 155-0014-01 | MICROCKT,DGTL:A-D CONVERTER |
| A15U3546 | 156-1177-01 | MICROCKT,DGTL:STET LINE PRIORITY ENCODER |
| A15U3551 | 156-0730-02 | MICROCKT,DGTL:QUAD 2-INP NOR BFR |
| A15U3557 | 156-1191-00 | MICROCKT,LINEAR:DUAL BI-FET OPNL AMPL |
| A15U3563 | 156-0140-02 | MICROCKT,DGTL:HEX BUFFERS W/OC HV OUT |
| A15U3564 | 156-0480-02 | MICROCKT,DGTL:QUAD 2-INP & GATE |
| A15U3576 | 156-1191-00 | MICROCKT,LINEAR:DUAL BI-FET OPNL AMPL |
| A15VR3485 | 152-0405-00 | SEMICOND DVC,DI:ZEN,15V,5%,1W |
| A15VR3486 | 152-0405-00 | SEMICOND DVC,DI:ZEN,15V,5%,1W |
| A15VR3487 | 152-0405-00 | SEMICOND DVC,DI:ZEN,15V,5%,1W |

The following Replaceable Electrical Parts List changes result from modifications to the portion of the Readout System found on the A6 Main Interface board.

**CHANGE TO:**

| | | |
|---|---|---|
| A6 | 670-8412-01 | CKT BOARD ASSY:MAIN INTERFACE |
| A6R241 | 321-0344-00 | RES.,FXD,FILM:37.4K OHM,1%,0.125W |

**REMOVE:**

| | | |
|---|---|---|
| A6CR241 | 152-0141-02 | SEMICOND DVC,DI:SW,SI,30V,150MA,30V |
| A6R251 | 315-0154-00 | RES.,FXD,CMPSN:150K OHM,5%,0.25W |
| A6R252 | 321-0335-00 | RES.,FXD,FILM:30.1K OHM,1%,0.125W |
| A6R253 | 321-0344-00 | RES.,FXD,FILM:37.4K OHM,1%,0.125W |
| A6R254 | 321-0335-00 | RES.,FXD,FILM:30.1K OHM,1%,0.125W |
| A6R255 | 315-0513-00 | RES.,FXD,CMPSN:51K OHM,5%,0.25W |
| A6R256 | 315-0154-00 | RES.,FXD,CMPSN:150K OHM,5%,0.25W |
| A6R257 | 321-0335-00 | RES.,FXD,FILM:30.1K OHM,1%,0.125W |
| A6R258 | 321-0335-00 | RES.,FXD,FILM:30.1K OHM,1%,0.125W |

**ADD:**

| | | |
|---|---|---|
| A6W241 | 131-0566-00 | BUS CONDUCTOR:DUMMY RES,2.375,22 AWG |



http://manuals.tektronix.com

DESCRIPTION

# TEXT CHANGES

**Checks and Adjustment Part II**
**Adjustment and Performance Check**

The following procedure is for the new Readout circuit and is to be used in conjunction with the new Readout System schematic diagram and parts locator diagram in the DIAGRAM CHANGES section of this Manual Change Information insert. It replaces the Adjustmnet and Performance Check procedure in Section 5 of the manual.

## G. READOUT SYSTEM

**Equipment Required:** (Numbers correspond to those listed in Table 5-3, Test Equipment.)

1. Test Oscilloscope
3. Amplifier (dual trace)
4. Time base
13. 10X Passive Probe (two required)
19. Screwdriver, low capacitance

BEFORE YOU BEGIN:

(1) Perform the Adjustment and Performance Check Power-Up Sequence.

(2) Refer to Section 6, Instrument Options, and the Change Information at the rear of this manual for and modifications which may affect this procedure.

(3) See the **Test Point and Adjustment Locations G** foldout page in Section 8 of the Instruction Manual and the **Diagram Changes** portion of this Manual Change Information insert.

**READOUT SYSTEM PRELIMINARY CONTROL SETTINGS**

| | |
|---|---|
| POWER | On |
| VERTICAL MODE | RIGHT |
| TRIGGER SOURCE | VERT MODE |
| INTENSITY | Midrange |
| READOUT INTENSITY | OFF (in detent) |
| GRAT ILLUM | Midrange |





http://manoman.sqhill.com

## DESCRIPTION

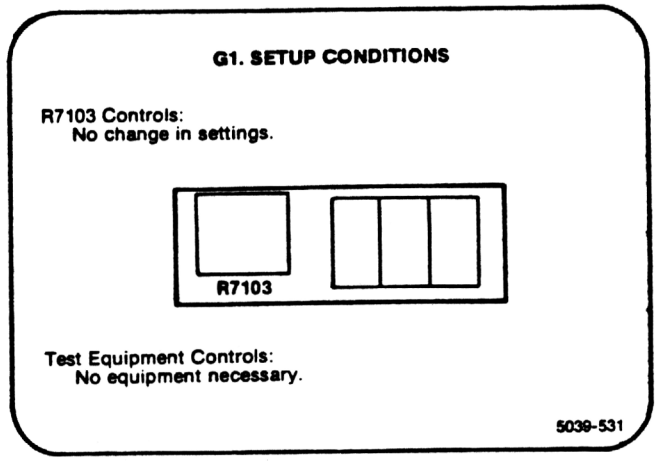


**G1. ADJUST READOUT VERTICAL SEPARATION AND CENTERING (R3560, R701, R1025, R1035)**

a. Move P3484 (on the A15 Readout Board) to connect pins 2 and 3 (the arrow etched on the circuit board indicates pin 1).

b. Set the READOUT control for visible characters (all zeros).

**NOTE**

*The following tolerances are provided as guides to correct instrument operation and are not instrument specifications.*

c. **EXAMINE** - the crt display for two rows of zeros, 30 zeros to a row. The two rows of zeros should be located vertically in the middle of the top and bottom divisions of the graticule.

**NOTE**

*The MVA Center (Main Vertical Amplifier) adjustment, R740, must be correct before making the next adjustment. Refer to F. Vertical System procedure.*

d. **ADJUST** - Vertical Separation adjustment R3560 (on the A15 Readout board) and R/O Center adjustment, R701 (on the A17 Vertical Amplifier board), to position the two rows of readout characters to the middle of the top and bottom divisions of the graticule.

e. **EXAMINE** - the display for two rows of zeros, 30 zeros to each row. Total length of each row of characters is between 9.5 and 10 divisions.

f. **ADJUST** - RO Ctr adjustment, R1025, and RO Gain, R1035 (both on the A19 Horizontal board), to horizontally center the zeros display and set the length of each row of characters between 9.5 and 10 divisions.

g. Move P3484 (on the A15 Readout board) to connect pins 1 and 2.



http://manoman.sghill.com

## DESCRIPTION

**G2. SETUP CONDITIONS**

R7103 Controls:
POWER ..... On
VERTICAL MODE ..... RIGHT

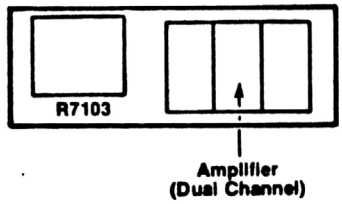


Test Equipment Controls:
Amplifier
Volts/Div, both ..... 50 mV/div
Display Mode ..... Dual trace

5039-532

### G2. ADJUST CHARACTER GENERATOR CLOCK (C3455)

**NOTE**

*If the preceding step was not performed, first refer to the Readout System Preliminary Control Settings, then proceed.*

a. Install the dual-trace amplifier unit in the RIGHT VERTICAL compartment.

b. Set the amplifier unit for a deflection factor of 50 millivolts/division.

c. **EXAMINE** - the displayed characters for completeness and accuracy. If the display is incorrect, the following adjustment may be required (steps d through h).

d. Connect test oscilloscope Channel 1 to pin 12 of U3502 (on the A15 Readout Board) with a 10X probe.

e. Set the test oscilloscope time base sweep rate for 5 mS/div, negative triggers.

f. Set the test oscilloscope amplifier unit Trigger Source to CH 1 and connect Channel 2 to pin 13 of U3502 (on the A15 Readout Board) with a 10X probe.

g. **ADJUST** - C3455 (on the A15 Readout board) for seventeen positive pulses on the test oscilloscope.

h. Remove the 10X probes.



http://manoman.spirit.com

## DESCRIPTION

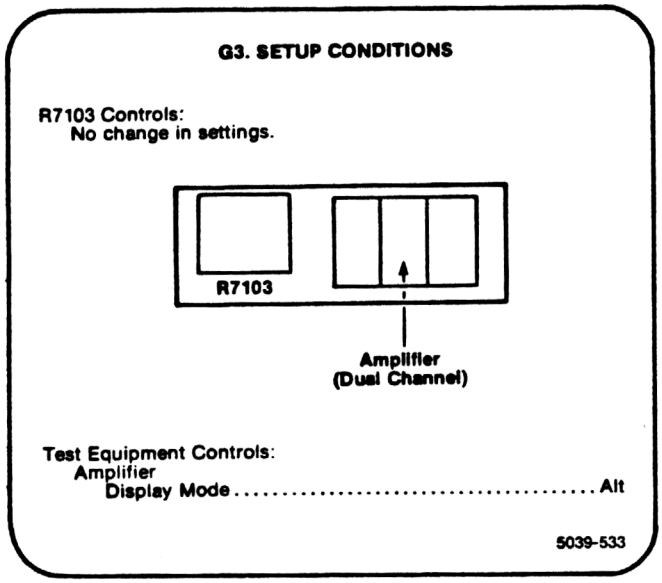


### G3. ADJUST COLUMN AND ROW MATCH (R3543, R3483)

**NOTE**

*If the preceding step was not performed, first refer to the Readout System Preliminary Control Settings, then proceed.*

a. Set the amplifier unit for a dual-trace display mode.

b. Press and hold the amplifier trace-identify buttons.

c. **EXAMINE** - the readout display for correct indication of "IDENTIFY". If the readout is incorrect or unstable, adjustment is required.

d. **ADJUST** - Column Match adjustment R3543 and Row Match adjustment R3483 (on the A15 Readout board) for correct readout of "IDENTIFY". Set these adjustments to the center of the adjustment range which provides correct readout indication. Release the amplifier unit trace-identify buttons.



http://manoman.sqhill.com

## DESCRIPTION

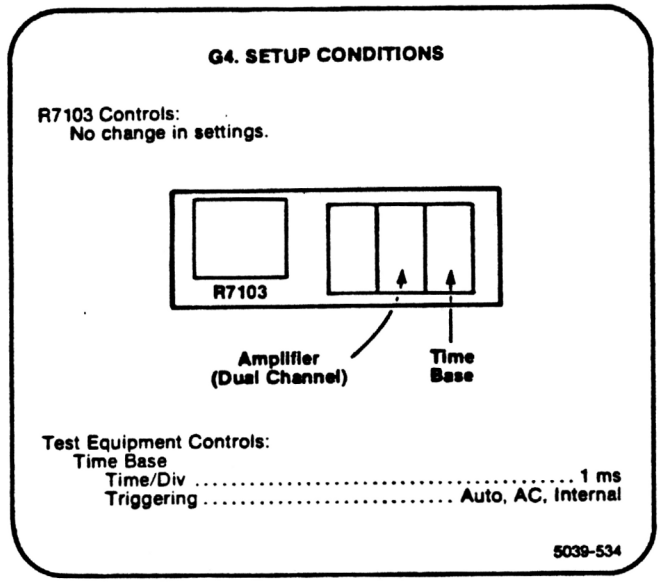


**G4. CHECK READOUT MODES**

**NOTE**

*If the preceding step was not performed, first refer to the Readout System Preliminary Control Settings, then proceed.*

a. Install a time-base unit in the A HORIZ compartment.

b. Set the time-base unit for a free-running sweep.

c. Set the READOUT INTENSITY control for a visible display.

d. **CHECK** - set the time-base unit on several sweep rates throughout the time-division switch range and check that the readout characters are are displayed independently of the sweep.

e. Set the READOUT +GATE or EXT switch to +GATE and READOUT INTENSITY control to PULSED.

f. Set the READOUT PRESET control for a visible readout display.

g. Set the time-base unit for a free-running (not triggered) sweep at a rate of 0.2 second/division.

h. **CHECK** - that the readout characters are blanked out while the sweep is running, and are displayed immediately after the end of the sweep; each character encoded by the plug-in units is displayed only once for each sweep.

i. Set the READOUT +GATE or EXT swtch to EXT.

j. **CHECK** - Press the READOUT MAN pushbutton and notice that one frame of readout is displayed.



http://manuals.tektronix.com

## DESCRIPTION

### Theory of Operation

The following Theory of Operation applies to the new Readout System and is to be used in conjunction with the new Readout schematic and parts locator diagrams in the DIAGRAM CHANGES portion of this Manual Change Information insert. It replaces the Readout System Theory of Operation given in Section 3 of the manual.

The Readout System provides an alphanumeric display of information encoded by the plug-in units. This display is presented on the CRT and is written by the CRT beam on a shared basis with the analog waveform display.

The following terms are used to describe the Readout System:

Character – A single number, letter, or symbol displayed on the CRT, either alone or in combination with other characters.

Word – A group of related characters. In the Readout System, a word can consist of up to 10 characters.

Frame – A display of all words for a given operating mode and plug-in combination. Up to 6 words can be displayed in one frame. Figure 1 shows the position of each word in a complete frame.

Column – One of the vertical lines in the Character Selection Matrix (see Fig. 2). Columns C-0 (column zero) through C-10 (column 10) can be addressed by the system.

Row – One of the horizontal lines in the Character Selection matrix. Rows R-1 (row 1) through R-10 (row 10) and R-14 (row 14) can be addressed by the system.

Time-Slot – A location in a pulse train. In the Readout System, the pulse train consists of 10 negative-going pulses. Each time-slot pulse is assigned a number between 1 and 10. For example, the first time-slot is TS-1.

Time-Multiplexing – Transmission of data from two or more sources over a common path by using different time intervals for different signals.

Hexidecimal – The hexidecimal numbering system uses the numerals 0 through 9 and the letters A through F to represent the sixteen possible cominations of four binary digits.

Octal – The octal numbering system uses the numerals 0 through 7 to represent the eight possible combinations of three binary digits.

Binary Coded Decimal – The Binary Coded Decimal system uses ten unique combinations of four binary digits to represent the decimal numbers 0 through 9.



http://manoman.sqhill.com

## DESCRIPTION

### NOTE

*The 7000-series Readout System is compatible with both three- and four-compartment mainframes. However, since three-compartment mainframes do not have a B Horizontal plug-in compartment, the B Horizontal channels are not used. In these instruments, a Jump command is encoded on the Main Interface for this compartment during time-slot one (see the discussion for Jump in the Column and Row Decoder portion of this Circuit Description). The Jump command (Row 14 current) is applied to pins 16 and 15 (B Horizontal channels 1 and 2 respectively) of U232. Column data current is not required for a Jump command. This allows the Readout System to sense a "jump" during time-slot one at channel 2, which causes it to "jump" the remaining nine time slots for that channel and go to channel 1, where it again senses a "Jump" command during time-slot one. This permits it to "jump" the remaining nine time-slots in channel 1 and the Readout System begins a new frame. The unused horizontal channels will be ignored in the following discussions.*

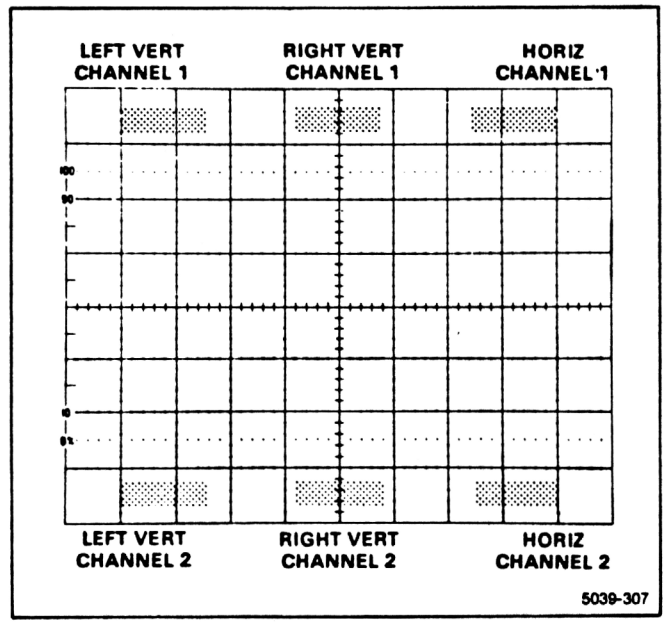


**Figure 1. Location of readout display on the crt identifying the originating plug-in and channel.**



http://manoman.sqhifi.com

## DESCRIPTION

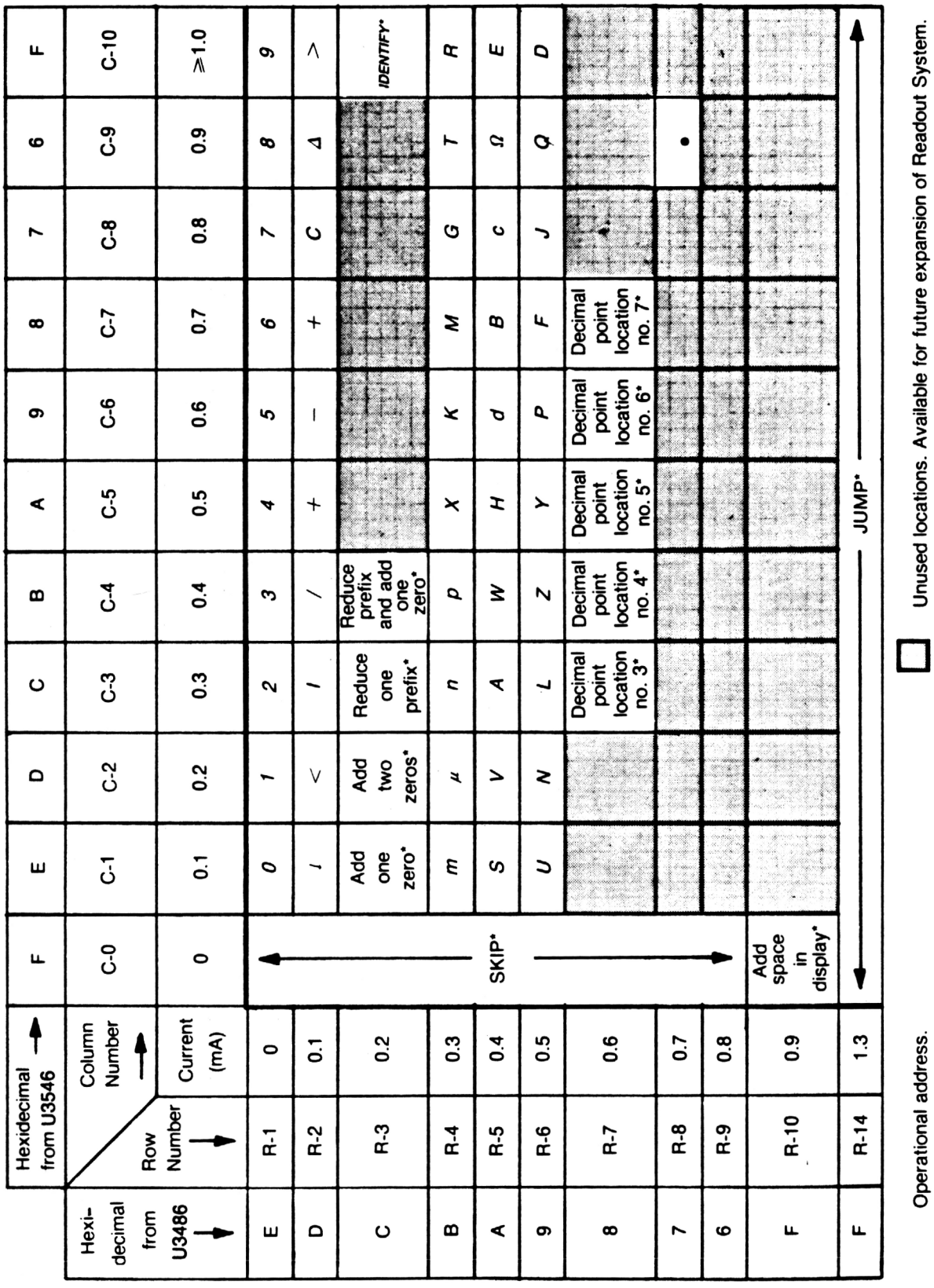


**Figure 2. Character selection matrix.**





http://manuals.sprint.com

## DESCRIPTION

### DISPLAY FORMAT

Up to 6 words of readout information can be displayed on the CRT. The position of each word is fixed and is directly related to the plug-in unit from which it originated. Figure 1 shows the area of the graticule where the readout from each plug-in unit is displayed. Notice that Channel 1 of each plug-in unit is displayed within the top division of the CRT, and Channel 2 is displayed directly below within the bottom division. Figure 3 shows a typical display where only Channel 2 of the Right Vertical and B Horizontal units is selected for display.

Each word in the readout display can contain up to 10 characters, although the typical display will contain between 2 and 7 characters per word. The characters are selected from the Character Selection Matrix shown in Figure 2. In addition, 13 operational addresses are provided for special instructions to the Readout System. The unused locations in the Matrix (shaded area) are available for future expansion of the Readout System. The method of addressing the locations in the Character selection Matrix is described in the following discussion.

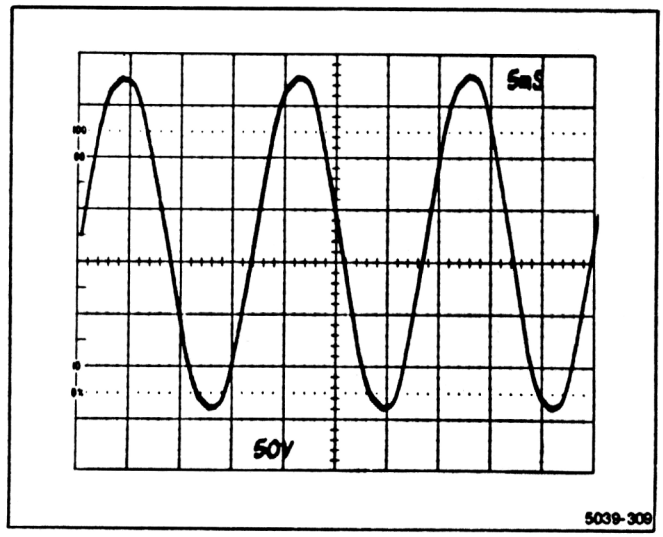


**Figure 3. Typical readout display where only channel 2 of the Right Vertical unit is displayed.**





http://manoman.sqhill.com

## DESCRIPTION

### DEVELOPING THE DISPLAY

This description is intended to relate the basic function of each stage to the operation of the overall Readout System. Detailed information on circuit operation is given later.

The key block in the Readout System is the Timer Stage (see schematic). This stage produces the basic signals that establish the timing sequences within the Readout System. The period of the timing signal is about 250 microseconds (it drops to about 210 microseconds when Display-Skip is received; see detailed description of Timer stage for further information). This stage also produces control signals for other stages within this circuit, and inhibit signals to the Vertical Amplifier, Horizontal Amplifier, and Logic circuits, which allow a readout display to be presented. The Time-Slot Counter stage receives a trapezoidal voltage signal from the Timer stage and directs it to one of ten output lines. These output lines are labeled TS-1 through TS-10 (time-slots 1 through 10) and are connected to the vertical and horizontal plug-in compartments, as well as to various stages within the Readout System. The output lines are energized sequentially, so there is a pulse on only one of the 10 lines during any 250-microsecond timing period. After the Time-Slot Counter stage has counted time-slot 10, it produces an End-of-Word pulse which advances the system to the next channel.

Two output lines (row and column) are connected from each channel of the plug-in unit back to the Readout System. Data is typically encoded on these output lines by connecting resistors between them and the time-slot input lines. The resultant output is a sequence of 10 analog current levels that range from 0 to 1 millampere (100 microamperes/step) on the row and column output lines. This row and column corresponds to the row and column of the Character Selection Matrix in Figure 2. The standard format for encoding information onto the output lines is given in Table 1 (Special-purpose plug-in units may have their own format for readout and these special formats will be defined in the manuals for these units).

**TABLE 1**
**Standard Readout Format**

| Time-Slot Number | Description |
|---|---|
| TS-1 | Determines Decimal Magnitude (number of zeros displayed or prefix change information) or the IDENTIFY function (no display during this time-slot). |
| TS-2 | Indicates normal or inverted input (no display for normal). |
| TS-3 | Indicates calibrated or uncalibrated condition of plug-in variable control (no display for calibrated condition). |
| TS-4 | Scaling. |
| TS-5<br>TS-6<br>TS-7 | Not encoded by plug-in unit. Left blank to allow addition of zeros by Readout System. |
| TS-8 | Defines the prefix which modifies the units of measurement. |
| TS-9<br>TS-10 | Defines the units of measurement of the plug-in unit. May be standard unit of measurement (V, A, S, etc.) or special units selected from the Character Selection Matrix. |



http://manoman.sghill.com

## DESCRIPTION

The encoded column and row data from the plug-in units is selected by the Column Data Switch and Row Data Switch stages respectively. These stages take the analog current from the 6 data lines (2 channels from each of the 3 plug-in compartments) and produce a time-multiplexed analog voltage output containing all of the column and row information from the plug-ins. The Column Data Switch and Row Data Switch are sequenced by the binary Channel Address Code from the Channel Counter.

The time-multiplexed output of the Column Data Switch is monitored by the Display-Skip Generator to determine if it represents valid information that should be displayed. Whenever information is not encoded in a time-slot, the Display-Skip Generator produces an output level to prevent the Timer stage from producing the control signals that normally interrupt the CRT display and present a character.

The analog outputs of the Column Data Switch and Row Data Switch are connected to the Column Decoder and Row Decoder stages respectively. These stages sense the magnitude of the analog voltage input and produce an output current on one of ten lines. The outputs of the Column Decoder stage are identified as C-1 through C-10 (column 1 through 10) corresponding to the encoded column information. Likewise, the outputs of the Row Decoder stage are identified as R-1 through R-10 (row 1 through 10) corresponding to the encoded row information. The row and column outputs are then converted to Binary Coded Decimal and used to address memory locations within the Character Generator. These outputs are also used at other points within the system to indicate when certain information has been encoded. One such stage is the Zeros Logic and Memory. During time-slot 1 (TS-1), this stage checks if zero-adding or prefix-shifting information has been encoded by the plug-in unit, and stores it in the memory until time-slots 5, 6, or 8. After storing this information, it triggers the Display-Skip Generator stage so that there is no display during time-slot 1 (as defined by Standard Readout Format; see Table 1). When time-slots 5, 6, and 8 occur, the memory is addressed and any information stored there during time-slot 1 is transferred to the input of the Column Decoder stage to modify the analog data during the applicable time-slot.

Another operation of the Zeros Logic and Memory stage is to produce the Identify function. When time-slot 1 is encoded for Identify (column 10, row 3), this stage produces an output level connected with the Row Decimal-to-BCD Converter and the Row and Column Data Switches. This output level connects the Column Data Switch with a coding network within the Readout system to produce an analog current during time-slots 2 through 9. The current is then converted to Binary Coded Decimal and combined with the Row Decimal-to-BCD Converter output to address locations within the Character Generator necessary to display "IDENTIFY" on the CRT. The Zeros Logic and Memory stage is reset after each word by the End-of-Word pulse.

Each character displayed on the CRT consists of a series of connected points within an 8-point by 8-point grid. The Character Generator contains grid locations of the points required to create any of the 50 possible characters shown in the Character Selection Matrix of Figure 2. The row and column data encoded during a time-slot are converted to BCD and used to address a location within the Character Generator containing the first grid point of the character to be displayed. The 4-bit binary output from the Lower Order Address Generator is combined with the address created by the row and column data to provide the other grid points necessary to complete the character.



http://manoman.sghill.com

## DESCRIPTION

Only one character is addressable in any one time-slot or a space can be added into the displayed word by the Horizontal Character Position Counter stage, when encoded by the plug-in. The latter stage counts the number of characters generated and produces an output current to step the display one character position to the right for each character. In addition, the character position is advanced once during each of time-slots 1, 2, and 3, whether a character is generated during these time-slots or not. This action fixes the starting point of the standard-format display such that the first digit of the scaling factor always starts at the same point within each word regardless of the information encoded in time-slot 1, 2, or 3 preceding this digit. Also, by encoding row 10 and column 0 during any time-slot, a blank space can be added to the display. Decimal points can be added to the display at any time by addressing the appropriate row and column (See Character Selection Matrix for location of decimal points). The Horizontal Character Position Counter stage is reset after each word by the Word Trigger pulse.

The Character Generators binary output is shaped by the X and Y Vector Generators into the appropriate X and Y-Axis signals to create characters. The Vector Amplifier outputs are amplified by the X and Y Output Amplifiers for use by the instruments horizontal and vertical deflection systems. The Channel Counter output is also used by these stages so the display from each channel is positioned to the area of the CRT which is associated with the plug-in and channel originating the word (see Fig. 1). The character positioning current or decimal positioning current generated by the Horizontal Character Position Counter or Decimal Point Logic stages is added to the X (horizontal) signal at the input to the X Output Amplifier, providing horizontal positioning of the characters within each word.

The Word Trigger stage produces a trigger from the End-of-Word pulse generated by the Time-Slot Counter stage after the tenth time-slot. This Word Trigger pulse advances the Channel Counter to display the information from the next channel or plug-in. This Word Trigger stage can also be advanced to jump a complete word, or a portion of a word, when a Jump Command is received from the Row Data Switch stage.

### TIMER

The Timer stage produces the timing sequence for all circuits within the Readout System. This stage produces six time-related output waveforms (see Fig. 4). The triangle waveform produced at pin 6 forms the basis for the remaining signals. The basic period of this triangle waveform is about 250 microseconds, as controlled by RC network R3435 and C3435. The triangle waveform is clipped and amplified by U3426 to form the trapezoidal output signal at pin 10. The amplitude of this output signal is exactly 15 volts, as determined by U3426 (exact amplitude is necessary to accurately encode data in plug-in units; see Encoding the Data). The trigger output at pin 5 provides the switching signal for the Time-Slot Counter.

The signals at pin 12, 13, and 14 are produced only when the triangle waveform is on its negative slope and the trapezoidal waveform has reached the lower level. The timing sequence of these waveforms is important to the operation of the Readout System (see expanded waveforms in Fig. 5). The Z-Axis inhibit command at pin 14 is produced first. This negative-going signal provides a blanking pulse to the Z-Axis Logic stage to blank the CRT before the display is switched to the Readout System. It also produces the strobe pulse through Q3438 and CR3439 which is connected to pin 15 of U3532.



http://manoman.stphil.com

## DESCRIPTION

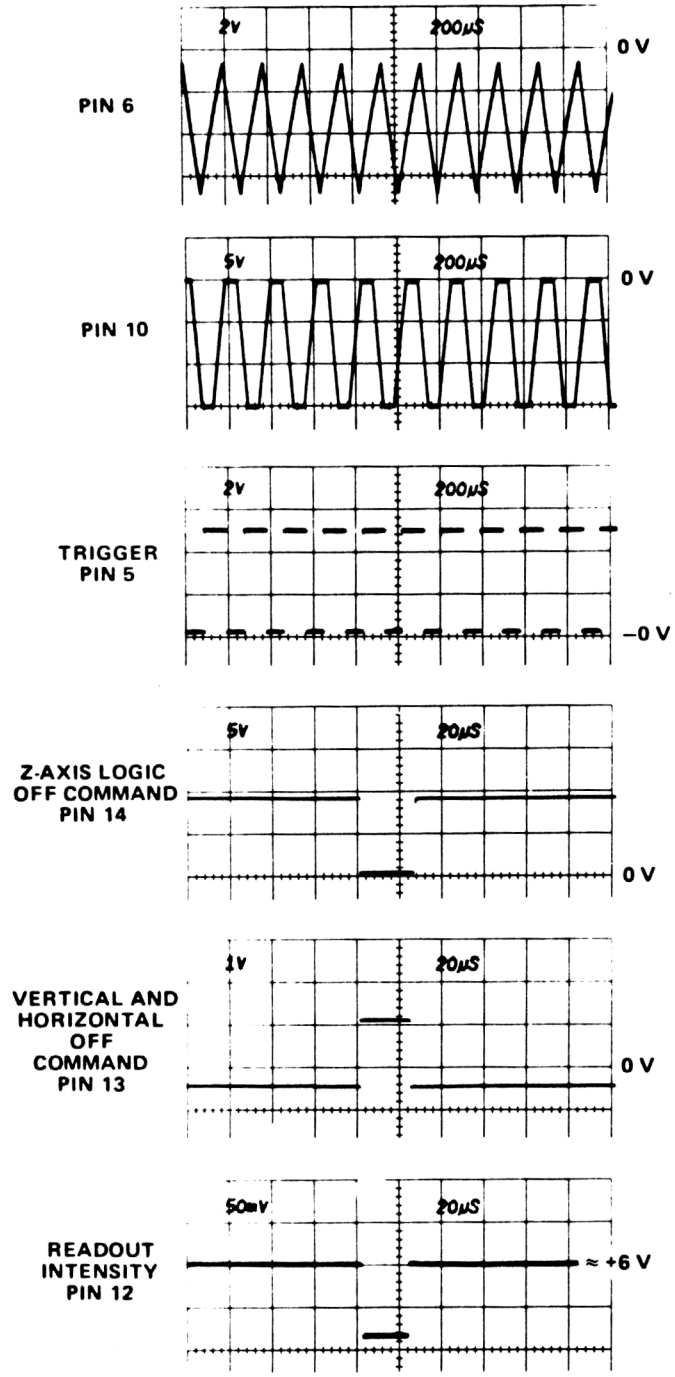


**NOTE: TEST OSCILLOSCOPE EXTERNALLY TRIGGERED FROM PIN 5 OF U3427.**

**Figure 4. Output waveforms of the Timer stage.**



http://manoman.sghill.com

## DESCRIPTION

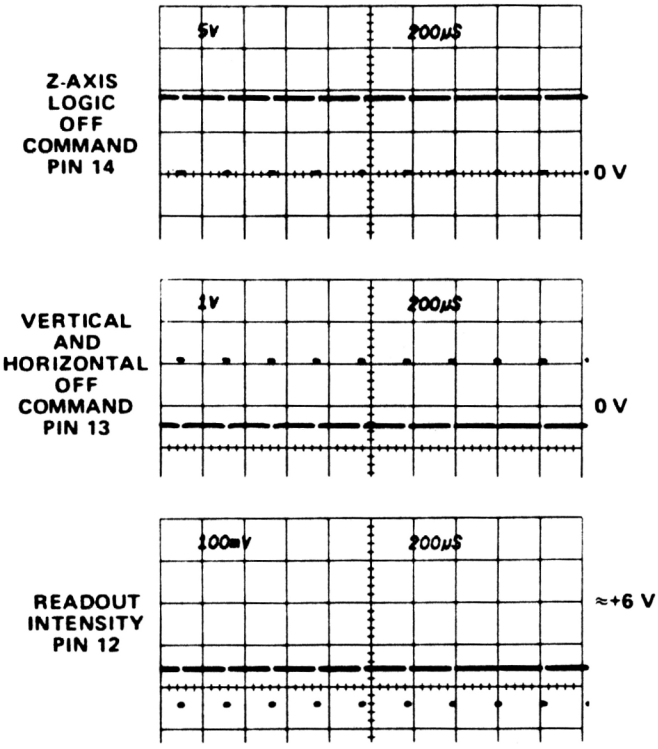


**NOTE: TEST OSCILLOSCOPE EXTERNALLY TRIGGERED FROM PIN 5 OF U3427.**

**Figure 5. Detail of output at pins 12, 13, and 14 of U3426.**

The purpose of this configuration is to prevent the Zeros Logic and Memory stage U3532 from storing incorrect data during the quiescent period of the strobe pulse. When the strobe pulse goes positive, CR3439 is reverse biased to disconnect Q3438 and allow U3532 to operate in the normal manner.

The next signal to be produced is the X-Y Inhibit Command at pin 13. This positive-going signal disconnects the plug-in signals from the vertical and horizontal deflection systems. The Ready signal is also derived from this output and connected to the Character Generator stage and the two Output Amplifier stages.

The Z Readout output at pin 12 is produced next. This current is connected to the CRT circuit to unblank the CRT to the intensity level determined by the voltage on the Readout Intensity line.

The Timer stage operates in one of two modes as controlled by the Display-Skip level at pin 4. The basic mode just described is a condition that does not occur unless all ten characters of each word (60 characters total) are displayed on the CRT. Under typical conditions, only a few characters are displayed in each word. The Display-Skip level at pin 4 determines the period of the Timer output signal. When a character is to be generated, pin 4 is LO and the circuit operates as just described. However, when a character is not to be displayed, a HI level is applied to pin 4 of U3426 through CR3425 from the Display-Skip Generator stage. This signal causes the Timer to shorten its period of operation to about 210 microseconds. The waveforms in Figure 6 show the operation of the Timer stage when the Display-Skip condition occurs for all positions in a word. Notice that there is no output at pins 12, 13, and 14 under this condition. This means that the CRT display is not interrupted to display characters. Also notice that the triangle waveform at pin 6 does not go as far negative, and that the negative portion of the trapezoidal waveform at pin 10 is shorter. Complete details on operation of the Display-Skip Generator are given later.



http://manoman.stahlt.com

## DESCRIPTION

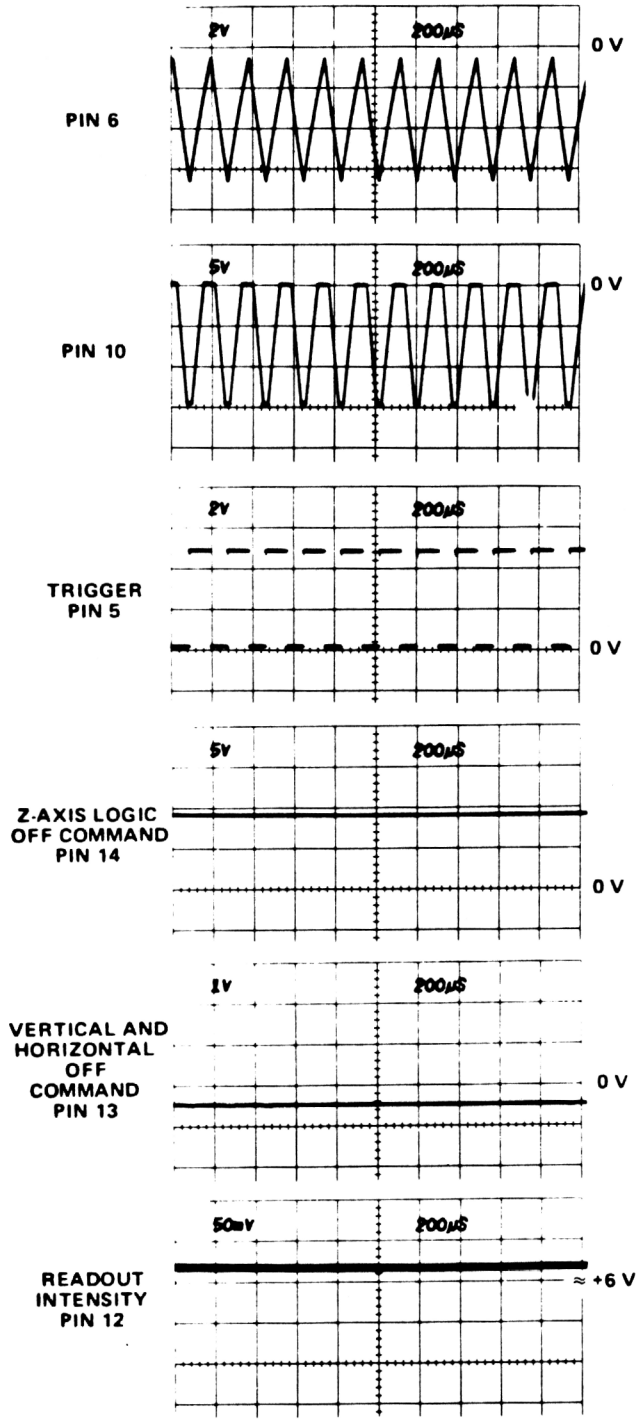


**NOTE: TEST OSCILLOSCOPE EXTERNALLY TRIGGERED FROM PIN 5 OF U3427.**

**Figure 6. Timer stage operation when display-skip condition occurs.**



http://manoman.sqhill.com

## DESCRIPTION

The Timer operation is also controlled by the Single-Shot Lockout level at pin 2. If this level is LO, the Timer operates as just described. However, if the Single-Shot Lockout stage sets a HI level at this pin, the Timer stage is locked out and can not produce any output signals (see Single-Shot Lockout description for further information).

A negative voltage on the readout intensity line sets the intensity of the readout display independently of the A or B INTENSITY controls. The Readout Intensity line also provides a means of turning the Readout System off when a readout display is not desired. When the Readout Intensity line is left open, the current from pin 11 of U3426 is interrupted, and at the same time, a positive voltage is applied to pin 4 through CR3424. The positive voltage switches the stage to the same conditions as were present under the Display-Skip condition. Therefore, the CRT display is not interrupted to present characters. However, time-slot pulses continue to be generated.

### TIME-SLOT COUNTER

Time-Slot Counter U3459 is a sequential switch which directs the trapezoidal waveform input at pin 8 to one of its 10 output lines. These time-slot pulses are used to interrogate the plug-in units to obtain data for the Readout System. The trigger pulse at pin 15 switches the Time-Slot Counter to the next output line, causing the output signal to be sequenced consecutively from time-slot 1 through time-slot 10. Figure 7 shows the time relationship of the time-slot pulses. Notice that only one line carries a time-slot pulse at any given time. When time-slot 10 is completed, a negative-going end-of-word pulse is produced at pin 2. The end-of-word pulse provides a drive pulse for the Word Trigger stage and also provides an enabling level to the Display-Skip Generator during time-slot 1 only.

Pin 16 is a reset input for the Time-Slot Counter. When this pin is held LO, the Time-Slot Counter resets to time-slot 1.

### WORD TRIGGER

The Word Trigger U3427B is a single-shot multivibrator that provides a reset pulse for the Horizontal Character Position Counter stage. The negative-going end-of-word pulse from pin 2 of U3459 triggers the single shot and causes its output to go high at pin 11.

### CHANNEL COUNTER

Channel Counter U3427A is a binary counter that produces the Channel Address Code for the Column and Row Decoder stages and the Output Amplifier stages. This code instructs these stages to sequentially select and display the 6 channels of data from the plug-ins. Table 2 gives the 6 combinations of the Channel Address Code and the resultant channel selected with each combination.



http://manoman.sqhill.com

## DESCRIPTION

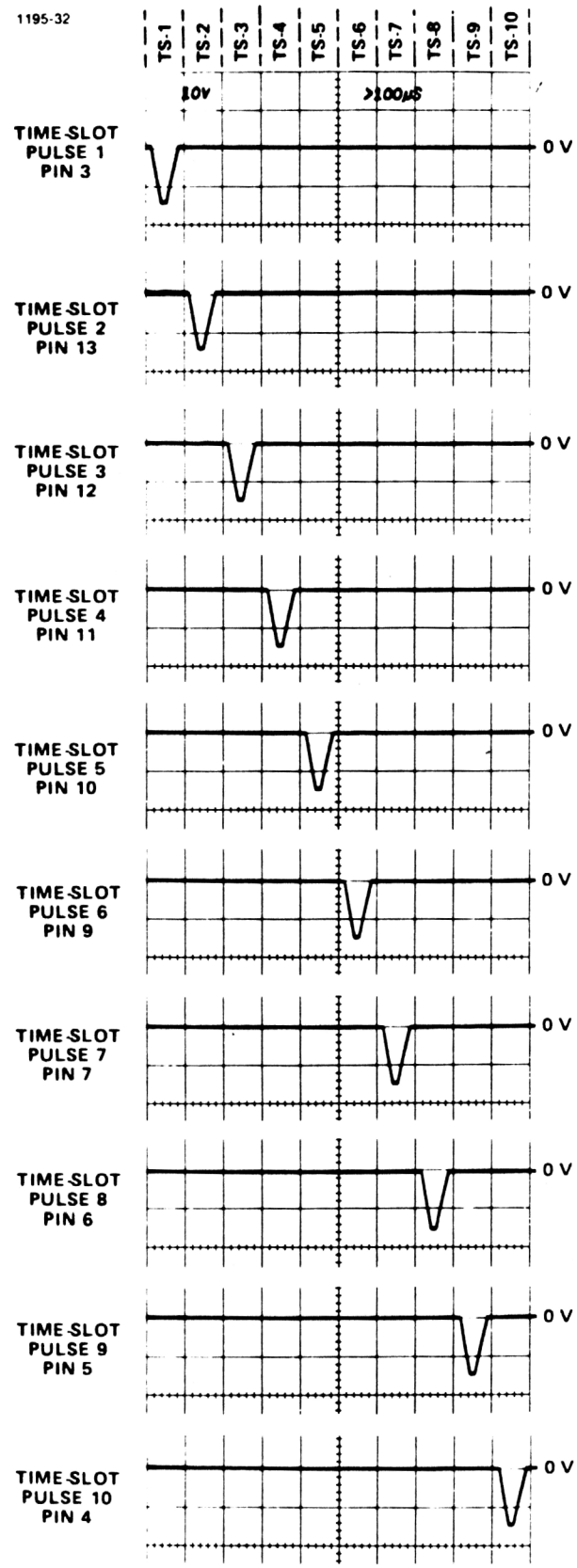


Figure 7. Timing relationship of the time-slot (TS) pulses produced by U3459.

NOTE: TEST OSCILLOSCOPE EXTERNALLY TRIGGERED FROM TIME-SLOT PULSE 1. SWEEP RATE UNCALIBRATED.



http://manoman.sqhill.com

## DESCRIPTION

**TABLE 2**
**Channel Address Code**

| Pin 5 U3427 | Pin 4 U3427 | Pin 3 U3427 | Channel Displayed |
|---|---|---|---|
| LO | LO | LO | Channel 1 Left vertical |
| LO | LO | HI | Channel 2 Left Vertical |
| LO | HI | LO | Channel 1 Right Vertical |
| LO | HI | HI | Channel 2 Right Vertical |
| HI | LO | LO | Channel 1 Horizontal |
| HI | LO | HI | Channel 2 Horizontal |

### SINGLE-SHOT LOCKOUT

The Single-Shot Lockout stage allows a single readout frame (6 complete words) to be displayed on the CRT, after which the Readout System is locked out, so further readout displays are not presented until the circuit is reset. Integrated circuit U3420A and U3420B are connected to form a bistable flip-flop. For free-run operation, pin 8 of U3420C is held HI. This activates U3420C and results in a LO output level at pin 10, enabling the Timer stage to operate in a free-running manner.

The output of the Single-Shot Lockout stage remains LO to allow U3426 to operate in the free-running mode until a LO is received at pin 8 of U3420C. When this occurs, the output level at pin 10 of U3420C does not change immediately. However, the Single Shot Lockout circuit is now enabled.

If the Channel Counter has not completed word 6, the Readout System continues to operate in the normal manner. When word 6 is completed, the negative-going end-of-frame pulse is produced at pin 5 of U3427A as the Channel Counter shifts to the code necessary to display word one. This pulse is applied to pin 8 of U3420C, which produces a HI at pin 6 of U3420B because of the momentary LO at pin 9. The HI at pin 6 produces a LO at pin 4, which causes pin 3 of U3420A to go LO. Because pin 2 is already LO, pin 1 goes HI. This disables the Timer stage, so it operates in the Display-Skip mode.

The Single-Shot Lockout stage remains in this condition until a positive-going trigger pulse is applied to pin 2 of U3420A. This trigger pulse produces a LO at pin 1 of U3420A to enable U3426 and disable U3420B. Now, the Timer stage can operate in the normal manner for another complete frame. When word 6 is completed, the Channel Counter produces another end-of-frame pulse to again lock out the Timer stage.



http://manoman.sqhill.com

## DESCRIPTION

### ENCODING THE DATA

Data is conveyed from the plug-in units to the Readout System in the form of an analog (current level) code. The characters that can be selected by the encoded data are shown on the Character Selection Matrix (see Fig. 2). Each character or special function requires two currents to define it (except Jump, which requires only one). These currents are identified as the column current and the row current, corresponding to the column and row of the matrix. The column and row data is encoded by programming the plug-in units. Figure 8 shows a typical encoding scheme using resistors for a voltage-sensing amplifier plug-in unit. Notice that the 10 TS (time slot) pulses produced by the Time-Slot Counter stage are connected to the plug-in unit. However, time-slots 5, 6, and 10 are not used by the plug-in unit to encode data when using the Standard Readout Format (See Table 1 for Standard Readout Format). The amplitude of the time-slot pulse is exactly -15 volts as determined by the Timer stage. Therefore, the resultant output current from the plug-in units can be accurately controlled by the programming resistors in the plug-in units.

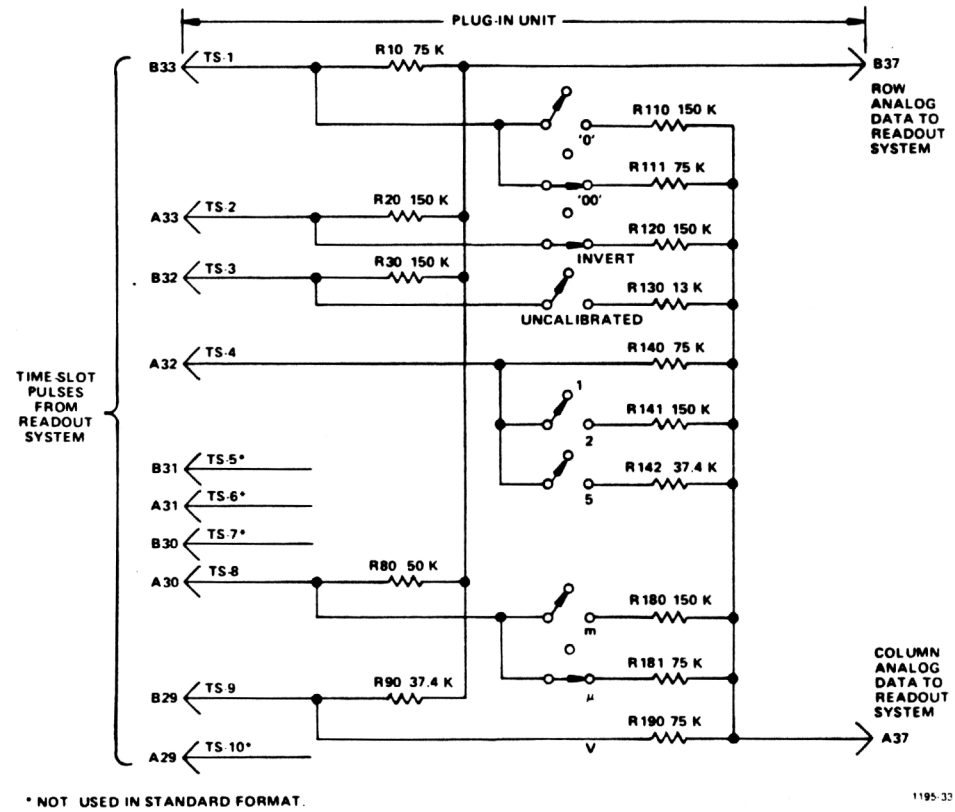


Figure 8. Typical encoding scheme for voltage-sensing plug-in unit. Coding shown for deflection factor of 100 microvolts.





http://manoman.sqnit.com

## DESCRIPTION

For example, in Figure 8 resistors R10 through R90 control the row analog data, which is connected back to the Readout System. Figure 9 shows an idealized output current waveform of row analog data resulting from the time-slot pulses. Each of the row-current levels shown in these waveforms correspond to 100 microamperes of current. The row numbers on the left-hand side of the waveform correspond to the rows in the Character Selection Matrix (see Fig. 2). The row analog data is connected back to the Readout System via terminal B37 of the plug-in interface.

The column analog data is defined by resistors R110 through R190. The program resistors are connected to the time-slot lines by switch closures to encode the desired data. The data, as encoded by the circuit shown in Figure 8, indicates a 100 microvolt sensitivity, with the CRT display showing inverted and calibrated deflection factors. This results in the idealized output current waveforms shown in Figure 9 at the column analog data output, terminal A37 of the plug-in interface.

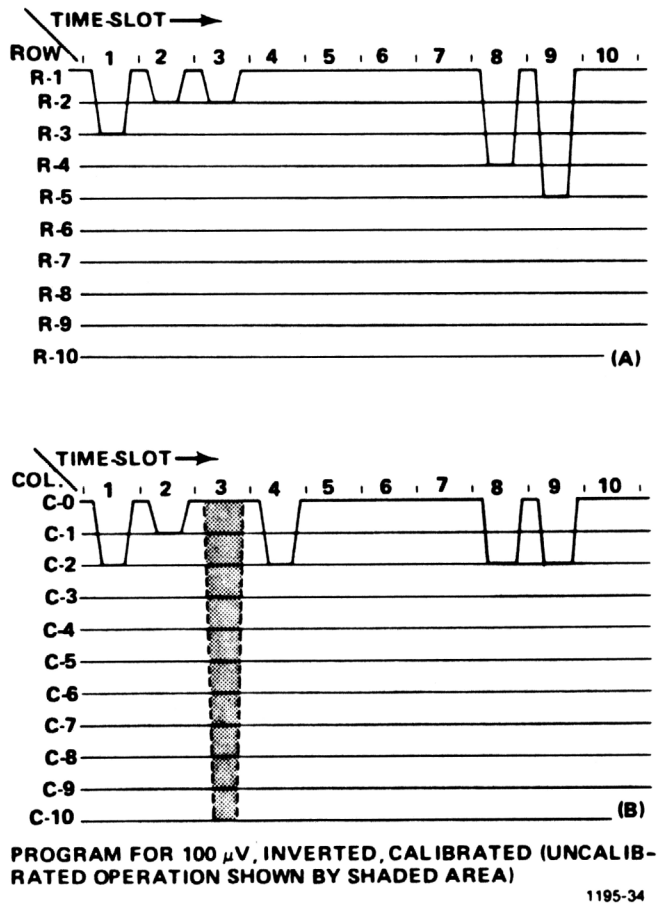


Figure 9. Idealized current waveforms of (A) Row analog data and (B) Column analog data.





http://manoman.sqhill.com

## DESCRIPTION

Resistor R111, connected between time-slot 1 and the column analog data output, encodes two units of current during time-slot 1. Referring to the Character Selection Matrix, Figure 2, two units of column current, along with the two units of row current encoded by resistor R10 (row 3), indicates that two zeros should be added to the display. Resistor R120 adds one unit of column current during time-slot 2 and, along with the one unit of current from the row output, the Readout System is instructed to add an invert arrow to the display. Resistor R130 is not connected to the time-slot 3 line, since the deflection factor is calibrated. Therefore, there is no display on the CRT during TS-3. (See Display-Skip Generator for further information).

During time-slot 4, two units of column current are encoded by R140. There is no row current encoded during this time-slot, resulting in the numeral 1 being displayed on the CRT. Neither row nor column analog data is encoded during time-slots 5, 6 and 7 as defined by the Standard Readout Format. During time-slot 8, two units of column current and three units of row current are encoded by resistors R181 and R80, respectively. This addresses the $\mu$ prefix in the Character Selection Matrix. The final data output is provided from time-slot 9 by R190 connected to the column output and R90 to the row output. These resistors encode two units of column current and four units of row current to cause a V (volts) symbol to be displayed. Time-slot 10 is not encoded, in accordance with the Standard Readout Format. The resultant CRT readout will be 100$\mu$V.

In the above example, the row analog data was programmed to define which row of the Character Selection Matrix was addressed to obtain information in each time-slot. The column data changes to encode the applicable readout data as the operating conditions change. For example, if the variable control of the plug-in unit was activated, R130 would be connected between time-slot 3 and the column analog data output line. This encodes 10 units of column current (see shaded area in time-slot 3 of the waveform shown in Fig. 9). Since one unit of row current is also encoded during this time-slot by R30, a $>$ (greater than) symbol is added to the display. The crt readout will now show $>$ 100$\mu$V. In a similar manner, the other switches can change the encoded data for the column output and thereby change the readout display. See the descriptions which follow for decoding this information.

The column analog data encoded by most plug-in units can be modified by attenuator probes connected to the input connectors of amplifier plug-in units. A special coding ring around the input connector of the plug-in unit senses the attenuation ratio of the probe (with readout-encoded probes only). The probe contains a circuit that provides additional column current. For example, if a 10X attenuator probe is connected to a plug-in unit encoded for 100 microvolts as shown in Figure 9, an additional unit of current is added to the column analog data during time-slot 1. Since two units of current were encoded by R111, this additional current results in a total of three units of column analog current during this time-slot. Referring to the Character Selection Matrix, three units of column current, along with the two units of row current encoded by R10, indicates that the prefix should be shifted one column to the left. Since this instruction occurs in the same time-slot that previously indicated that two zeros should be added to the display and only one instruction can be encoded during a time-slot, the zeros do not appear in the display. The CRT readout will now be changed to 1mV (readout program produced by plug-in same as for previous example).

Three other lines of information are connected from the plug-in compartments to the Readout System. The column and row analog data from channel 2 of a dual-channel plug-in are connected to the Readout System through terminals A38 and B38 of the plug-in interface, respectively. Force readout information is encoded on terminal A35 and the function of this input is described under Column and Row Data Switches. The preceding information gave a typical example of encoding data from an amplifier plug-in unit. Specific encoding data and circuitry is shown in the individual plug-in unit manuals.



http://manoman.sghill.com

## DESCRIPTION

### COLUMN AND ROW DATA SWITCHES

The encoding data from the plug-in units is connected to the Column and Row Data Switch stages. A column-data line and a row-data line convey analog data from each of the 6 data sources (2 channels from each of the 3 plug-in compartments).

The Column Data Switch U262 and the Row Data Switch U232 receive the Channel Address Code from the Channel Counter (refer to the schematic at the rear of this insert). This binary code directs the Column Data Switch and the Row Data Switch to the channel which should be the source of the encoding data. Table 2 gives the six combinations of the Channel Address Code and the resultant channel selected with each combination. These stages have nine inputs and provide a time-multiplexed output at pin 7, which includes the information from all of the input channels. Eight of the nine inputs to each stage originate in the plug-in units and the ninth input to U262 comes from a special data-encoding network composed of resistors R241 through R248 (See Zeros Logic and Memory description for further information on ninth channel).

In addition to the encoding data inputs from the plug-in units, inputs are provided to the Column Data Switch from the VERTICAL MODE and HORIZONTAL MODE switches to inhibit the readout for any plug-in unit(s) not selected for display. When a unit is not selected, the line corresponding to the opposite channel is HI to forward bias the associated diodes: CR212 through CR215. The forward-biased diodes cause the channel switches to bypass the encoded data from the inhibited channel. However, since it may be desired to display information from special-purpose plug-in units (even through they do not produce a normal waveform display on the CRT), a feature is provided to over-ride the channel inhibit. This is done by applying a LO to the associated Force Readout input. The LO level diverts the HI channel-inhibit current and allows the data from this plug-in unit to reach the Column Data Switch, even though it has not been selected for display by the mode switch.

Row Match adjustment, R3483, sets the gain of the Row Data Switch to match the gain of the Row Decoder for correct output. Column Match adjustment, R3543 performs the same function for the Column Data Switch stage.

### DISPLAY-SKIP GENERATOR

The Display-Skip Generator is made up of Q3523, Q3526, Q3527 and Q3529. This stage monitors the time-multiplexed column data at the output of the Column Data Switch during each time-slot to determine if the information is valid data that should result in a CRT display. Quiescently, about 100 microamperes of current flows through R3542 from Q3543 and the Zeros Logic and Memory stage. (The purpose of this quiescent current will be discussed in connection with the Zeros Logic and Memory stage). This current biases Q3523A so that its base is about 0.2 volt more positive than the base of Q3523B in the absence of column data. Therefore, since Q3523A and Q3523B are connected as a comparator, Q3523A will remain on unless its base is pulled more negative than the base of Q3523B.

The analog data output from the Column Data Switch produces a 0.5 volt (approximately) change for each unit of column current that has been encoded by the plug-in unit. Whenever any information appears at the output of the Column Data Switch, the base of Q3523A is pulled more negative than the base of Q3523B, resulting in a negative (LO) Display-Skip output to the Timer stage through Q3529. Recall that a LO was necessary at the skip input of the Timer so it could perform the complete sequence necessary to display a character.



http://manoman.spmn.com

## DESCRIPTION

Transistors Q3526 and Q3527 also provide Display-Skip action. The end-of-word level connected to their emitters is LO only during time-slot 1. This means they are enabled only during this time-slot. These transistors allow the Zeros Logic and Memory stage to generate a Display-Skip signal during time-slot 1 when information that is not to be displayed on the CRT has been stored in memory (further information is given under Zeros Logic and Memory).

### COLUMN AND ROW DECODERS

The Column Decoder U3544 and Row Decoder U3485 sense the magnitude of the analog voltages at their inputs (pin 10) and produce a binary output on one of ten lines corresponding to the column or row data encoded by the plug-in unit. These outputs provide the Column Digital Data and Row Digital Data, which is encoded by the Decimal-to-BCD converters to create the address used by the Character Generator in determining which character will be displayed. The column and row data is also used throughout the Readout System to perform other functions.

The input current at pin 9 of the Column Decoder stage is steered to only one of the ten Column Digital Data outputs. When a Display-Skip signal is present (collector of Q3529 HI), pin 9 is pulled HI through CR3529. This ensures that no current is connected to the Character Generator stage under this condition. Notice the corresponding input on the Row Decoder. This input is connected to ground and causes only one of the ten row outputs to saturate to ground.

The network at the input of the Row Decoder, made up of Q3481 and its associated components, is a Row-14 detector that produces the Jump Command. This row current is encoded by special-purpose plug-ins to cause all or part of a word to be jumped. Whenever row 14 (13 units of row current, or 1.3 millamperes) is encoded, the base of Q3481 pulled negative enough so that this transistor is forward biased to produce a LO Jump Command output at its emitter. The Jump Command is connected to the set input of RS flip-flop U3462B, whose reset input is connected to the Trigger Signal from pin 5 of the Timer. When the Jump Command and Trigger inputs are low, U3462B produces a LO output to reset the time-slot Counter as well as advancing the Horizontal Character Position Counter and the Channel Counter. U3462B also produces a HI output to signal Display Skip at pin 4 of the Timer.

### ZEROS LOGIC AND MEMORY

The Zeros Logic and Memory stage U3532 stores data encoded by the plug-in units to provide zeros-adding and prefix-shifting logic for the Readout System. The Strobe pulse at pin 15 goes positive when the data has stabilized and can be inspected. This activates the Zeros Logic and Memory stage so that it can store the encoded data.

Typical output waveforms of the five possible input conditions that can occur are shown in Figure 10. When time-slot 1 occurs, a store command is given to all of the memories. If the plug-in units encoded data for column 1, 2, 3, 4, or 10 during time-slot 1, the appropriate memory (or memories) is set. Notice that row 3 information from the Row Decoder must also be present at pin 16 for data to be stored in the memory of U3532.

If data was encoded during time-slot 1, a negative-going output is produced at pin 7 while the memories are being set. This negative-going pulse is connected to the base of Q3527 in the Display-Skip Generator to produce a Display-Skip output. Since the information encoded during time-slot 1 was only provided to set the memories and not intended to be displayed on the CRT at this time, the Display-Skip output prevents a readout display during this time-slot.



http://manoman.spiff.com

## DESCRIPTION

| INPUT PIN OF U2232 ACTIVATED | COMMAND | TIME-SLOTS |
|---|---|---|
| 14 | IDENTIFY | 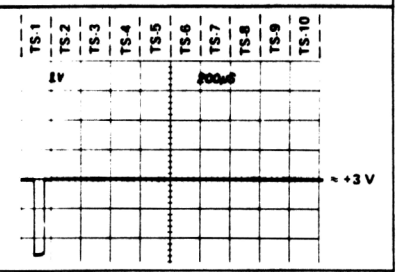 |
| 12 | ADD ONE ZERO | 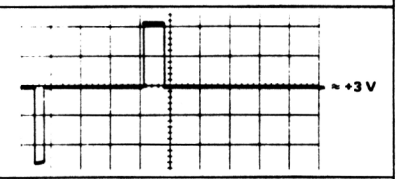 |
| 13 | ADD TWO ZEROS | 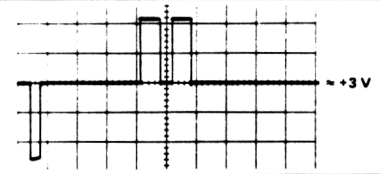 |
| 10 | DECREASE PREFIX | 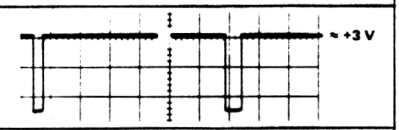 |
| 11 | DECREASE PREFIX AND ADD ONE ZERO | 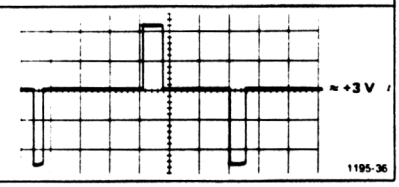 |



Figure 10. Typical output waveforms for Zeros Logic and Memory stage operation (at pin 7 of U3532).

During time-slot 5, a memory within U3532 is interrogated. If information was stored in this memory, a positive-going output is produced at pin 7. This pulse is connected to pin 10 of the Column Decoder through Q3543 to add one unit of current at the input of the Column Decoder. This produces a zero after the character displayed during time-slot 4. During time-slot 6, another memory within U3532 is interrogated to see if another zero should be added. If another zero is necessary, a second positive output is produced at pin 7, which again results in a column 1 output from the Column Decoder and a second 0 in the CRT display.

Finally, another memory within U3532 is interrogated during time-slot 8 to determine whether the prefix should be changed, or left at the value that was encoded. If data has been encoded that calls for a shift in prefix, a negative-going output level is produced at pin 7. This negative level subtracts one unit of column current from the data at the input to the Column Decoder. Notice, on the Character Selection Matrix of Figure 2, that when row 4 is programmed, a reduction of one column results in a one-column shift of the prefix. For example, with the 100$\mu$V program shown in Figure 9. If the data received from the plug-in called for a shift in prefix, the CRT readout would be changed to 1mV (zeros deleted by program; see Encoding the Data).

The 100 microamperes of quiescent current through R3542 provided by Q3543 (see Display-Skip Generator) allows the prefix to be shifted from m (100 microamperes of column current, column 1) to no prefix (0 column current, column 0) so only the unit of measurement encoded during time-slot 9 is displayed. Notice that reducing the prefix program from column 1 to column 0 programs the Readout System to not display a character at this readout location.



http://manoman.sghill.com

## DESCRIPTION

A further feature of the Zeros Logic and Memory is the Identify function. If 10 units of column current are encoded by the plug-in unit along with row 3 during time-slot 1, the Zeros Logic and Memory produces a negative-going output pulse at pin 1 to switch the Column Data Switch and Row Data Switch to the ninth channel. Then, time-slot pulses 2 through 9 encode an output current through resistors R241-R248 for column data and enable pin 10 of U3486. This provides the addresses necessary to display the word IDENTIFY in the word position allotted to the channel that originated the Identify command. After completion of this word, the Column Data Switch and Row Data Switch continue with the next word in the sequence.

The end-of-word signal from the Time-Slot Counter is connected to pin 9 of U3532 through C3539. At the end of each word of readout information, this pulse goes LO. This erases the four memories in the Zeros Logic and Memory in preparation for the data to be received from the next channel.

### CHARACTER GENERATOR

Each character to be displayed on the instrument CRT consists of a series of connecting points developed on a possible 8-point by 8-point grid (see Fig. 11). The 8-bit binary output from the Character Generator is used to determine the location of points within the grid, whether or not to provide a trace connecting two points, and the point at which a character has been completed. The Character Generator stage consists of an oscillator, the Lower Order Address Generator, and an EPROM connected to a latch.

Q3451 and Q3452 form a square-wave oscillator whose frequency is adjustable with C3455 to provide 16 cycles within the time allotted for developing a character. The base of Q3452 goes LO when the Timer produces a negative going Ready pulse at pin 13. This starts the oscillator by turning Q3452 on. The emitter of Q3451 becomes more negative as C3454 and C3455 discharge through R3454. The capacitors continue to discharge until the emitter-base junction of Q3451 becomes forward biased. Q3451 then begins to conduct and causes the oscillator to begin changing states. As Q3451 conducts, the discharge through C3454 and C3455 stops and causes a collector current reduction in Q3452. The current reduction causes the emitter and base of Q3452 to rise positive which pulls the emitter of Q3451 along with them through C3454 and C3455. This positive shift on the emitter of Q3451 turns it off. Now with C3451 conducting and Q3452 turned off, the voltage on the emitter of Q3452 begins to go negative with C3454 and C3455 beginning to charge through R3455. When the emitter-base junction of Q3452 becomes forward biased, the oscillator again changes states and completes one cycle.

The signal produced by the oscillator at the collector of Q3452 switches Q3453 on and off to create the clock pulses used by the Lower Order Address Generator and the EPROM latch. The oscillator will continue to run until the Timer Ready output at pin 13 goes positive and pulls up the base of Q3452.

The Lower Order Address Generator is a 4-bit binary counter and consists of U3502B. The negative going Timer Ready pulse is inverted by Q3442 and used to reset U3502B. The oscillator is also enabled by the Ready signal and begins providing the clock input at pin 13. The counter then begins at 0000 and counts at the frequency of the oscillator, continuing to do so until the Ready signal goes positive. The Lower Order Address Generator's 4-bit output is connected to the four lower order address inputs on the Character Generator, U3503.



http://manoman.sqhill.com

## DESCRIPTION

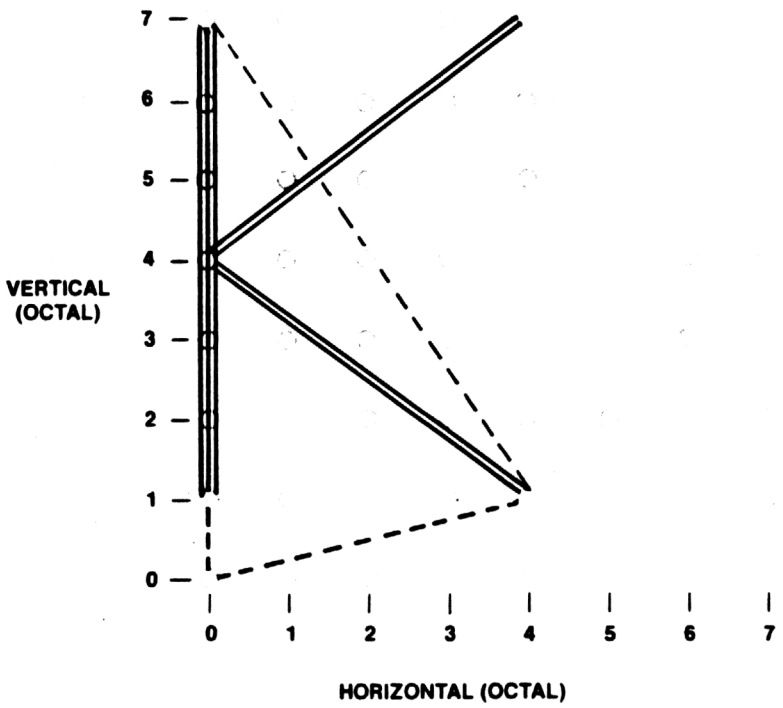


**"K" CHARACTER**

| CHARACTER GENERATOR ADDRESS (HEXIDECIMAL) | CHARACTER GENERATOR OUTPUT | | BIT 7 MOVE - - - - DRAW ——— | BIT 8 END OF CHARACTER? |
|---|---|---|---|---|
| | BINARY 8 7 6 5 4 3 2 1 | OCTAL | | |
| B 9 0 | 0 0 0 0 0 0 0 0 | 0 0 0 | MOVE | NO |
| B 9 1 | 0 0 0 0 1 0 0 0 | 0 1 0 | MOVE | NO |
| B 9 2 | 0 1 1 1 1 0 0 0 | 1 7 0 | DRAW | NO |
| B 9 3 | 0 1 0 0 1 0 0 0 | 1 1 0 | DRAW | NO |
| B 9 4 | 0 1 1 1 1 0 0 0 | 1 7 0 | DRAW | NO |
| B 9 5 | 0 0 0 0 1 1 0 0 | 0 1 4 | MOVE | NO |
| B 9 6 | 0 1 1 0 0 0 0 0 | 1 4 0 | DRAW | NO |
| B 9 7 | 0 1 1 1 1 1 0 0 | 1 7 4 | DRAW | NO |
| B 9 8 | 0 1 1 0 0 0 0 0 | 1 4 0 | DRAW | NO |
| B 9 9 | 0 1 0 0 1 1 0 0 | 1 1 4 | DRAW | NO |
| B 9 A | 1 0 0 0 0 0 0 0 | 2 0 0 | MOVE | YES |

**Figure 11. Developing a typical character on the crt.**





http://manoman.sqhill.com

## DESCRIPTION

U3504 is an octal D-type flip-flop used as a latch to stabilize and synchronize the Character Generator EPROM output. It is reset by the same signal that starts the oscillator and is clocked at pin 11 by the oscillator output from Q3453. Q3504 will be considered to be part of the Character Generator in the discussion that follows.

The Character Generator U3503 is a 4k X 8-bit EPROM which contains the binary words used by the output stages in creating the signals necessary to form readout characters. There are twelve address inputs, with the lower four coming from the Lower Order Address Generator, the center four from the Column Decimal-to-BCD Converter, and the upper four from the Row Decimal-to-BCD Converter. As previously mentioned, each character is developed on an 8-point by 8-point grid (see Fig. 11 for a typical character). The Character Generator's 8-bit output provides the information necessary to move the instrument beam around within the grid, to turn the beam on and off, and to indicate when a character is complete.

The row and column data cause a 4-bit binary code to be generated at the outputs of the Row and Column Decimal-to-BCD Converters when a readout character is to be displayed. The Lower Order Address Generator is enabled and also provides a 4-bit binary code. These twelve bits are combined to form the EPROM address containing the 8-bit binary word which will locate the instrument beam at the character's starting grid location.

The 8-bit word can be broken down into four parts. The lower three bits are the horizontal grid coordinate, bits 4 through 6 are the vertical coordinate, bit 7 turns the Z Readout on and off, and bit 8 indicates whether or not the character is complete.

The character grid (Fig. 11) can be thought of as having vertical and horizontal coordinates numbered 0 through 7, with location "0,0" in the lower left corner. The 8-bit binary word from the Character Generator is converted to octal to easier recognize the vertical and horizontal coordinates. A binary "00001010" becomes octal "012". This number would cause the instrument CRT beam to point at grid coordinates vertical "1" and horizontal "2". The fact that the first octal digit is "0" indicates two things. First it shows that bit 7 of the binary word is LO which turns off Q3432 and the Z Readout signal to the instrument. It also shows that bit 8 is LO so the character is not complete. When bit 7 is HI, it advances the Horizontal Character Position Counter for the next character within the readout word.

The 4-bit outputs from the Row and Column Decimal-to-BCD Converters remain the same until the character is complete. However, the Lower Order Address Generator keeps counting and combines with the Row and Column Decimal-to-BCD Converter's outputs to address all the EPROM locations necessary to form the readout character.

Suppose the next address produces a Character Generator output of "01111010" or octal "172". The octal digit "1" indicates binary bit 7 is high which will turn on Q3432 and the Z Readout output to the instrument. The instrument will now provide a trace from the previous vertical and horizontal coordinates to the new ones, vertical "7" and horizontal "2". Thus the character is formed by a series of binary words causing the instrument CRT beam to move or draw between points.



http://manoman.sqhill.com

DESCRIPTION

## HORIZONTAL CHARACTER POSITION COUNTER

The Horizontal Character Position Counter U3502A is a 4-bit binary counter. Its output is converted to current by R3566 through R3569 and added to the X (horizontal) signal for spacing readout characters horizontally on the CRT. The counter is reset to "0000" with a Word Trigger pulse from U3427B and is advanced with inputs from two possible sources. The first is a HI End-of-Character signal from pin 19 of U3504. The counter can also be advanced when a Space instruction is encoded by the plug-in unit to cause a space to be left between two characters on the CRT. A Space instruction occurs when row 10 from the Row Decoder goes LO and is inverted by U3457D to advance the Horizontal Character Position Counter. No character could be displayed in this situation as no character information is stored at the Character Generator addresses formed using row 10.

Time slots 1, 2, and 3 are also connected to the Space instruction through VR3485, VR3486, and VR3487 respectively. This configuration adds a space to the displayed word during time slots 1, 2, and 3, even if information is not encoded during these time slots. With this feature, the information which is displayed during time-slot 4 (1-2-5 data) always starts in the fourth character position whether data has been displayed in the previous time-slots or not. Therefore, the resultant CRT display does not shift positions as normal/invert or cal/uncal information is encoded by the plug-in.

## DECIMAL POSITION LOGIC

The Decimal Position Logic stage allows decimal points to be displayed at five possible locations within a readout word (see Fig. 12). The decimal location encoded by a plug-in during time-slot one is achieved by adding positioning current to the X (horizontal) readout signal. Circuitry for this stage includes five 2-input NOR gates in U3457 and U3551 with precision resistors connected to their outputs. One input of each NOR gate is connected to row 7 on the Row Decoder and the other to one of columns 3 through 7 on the Column Decoder. When a decimal is to be displayed, row 7 goes LO and disables the Horizontal Character Position Counter by keeping the four outputs of U3564 LO. It also sets one input of each of the five NOR gates to LO. One of columns 3 through 7 also goes LO, depending on which decimal position is encoded, causing the NOR gate to which it's connected to go HI. This high adds current to the X (horizontal) signal in the amount determined by the resistor connected to the NOR gate's output. Each Character Generator location addressed by row 7 and column 3 through 7 contains information necessary to form a decimal point on the CRT in the position indicated. The Horizontal Character Position Counter resumes normal operation and the Decimal Position Logic is disabled when row 7 goes back up at the end of the time-slot.

Some plug-ins require decimal points at locations in the readout word other than the five provided by the Decimal Position Logic stage. An additional decimal point can be displayed in any position normally available to characters by encoding row 8 with column 9. The Horizontal Character Position Counter provides positioning current in this mode and the Decimal Position Logic stage is disabled.



http://manoman.sqhill.com

DESCRIPTION

## VECTOR GENERATORS

The Y Vector Generator is in two stages and consists of U3510A and B. Vertical character size adjustment is provided with R3510 as a variable feedback resistor for U3510A. Input to the Vector Generator is provided by the three bits of vertical character information from pins 9, 12, and 15 of the Character Generator latch U3504. The digital highs and lows across R3506, R3507 and R3508 are mixed as stepped current levels at pin 2 of U3510A. These sudden analog steps are converted into a smooth transition from one level to the next by RCL network R3512, C3512, and L3512. U3510B current buffers the resulting signal to be mixed with the Channel Counter vertical information at the input of the Y Output Amplifier.

The X Vector Generator operates similarly to the Y Vector Generator. Gain for the stage is fixed by the circuit components and its output is current buffered to be mixed at the input of the X Output Amplifier.

## OUTPUT AMPLIFIERS

The Y Output Amplifier provides the Y (vertical) signal to the instrument by combining the signal from the Y Vector Generator with the channel 1 or 2 information from the Channel Counter. The amplifier consists of U3557B with Q3555 in its input circuit. Amplifier gain is adjustable with R3560 to control the vertical separation between readout words displayed at the top and bottom of the graticule area. Q3555 switches the amplifier input on and off with the Timer Ready signal, using Q3550 to provide impedance matching. The channel 1 or 2 information from pin 3 of the Channel Counter U3427A is inverted by U3551A and converted to current by R3552 and R3553. The Channel Counter produces a LO at pin 3 when the readout word is to be displayed at the top of the graticule. The LO is inverted to HI by U3551A and adds current to the Y (vertical) readout signal.

The X Output Amplifier consists of U3557A and Q3596. It operates similarly to the Y Output Amplifier to provide the X (horizontal) signal to the instrument. Input to the amplifier is a combination of outputs from the X Vector Generator, Horizontal Character Position Counter, Decimal Position Logic, and horizontal word position information from the Channel Counter. The gain of this stage is fixed by the resistor values in the circuit.



http://manoman.sghill.com

DESCRIPTION

## DIAGRAM CHANGES

The following schematic and parts locator diagrams are for the new Readout circuit board. They supercede those currently found in Section 8 of the manual and are to be used in conjunction with the new Replaceable Electrical Parts List, Theory of Operation, and Performance Check/Adjustment found in other portions of this Manual Change Information insert.



http://manoman.sqhill.com

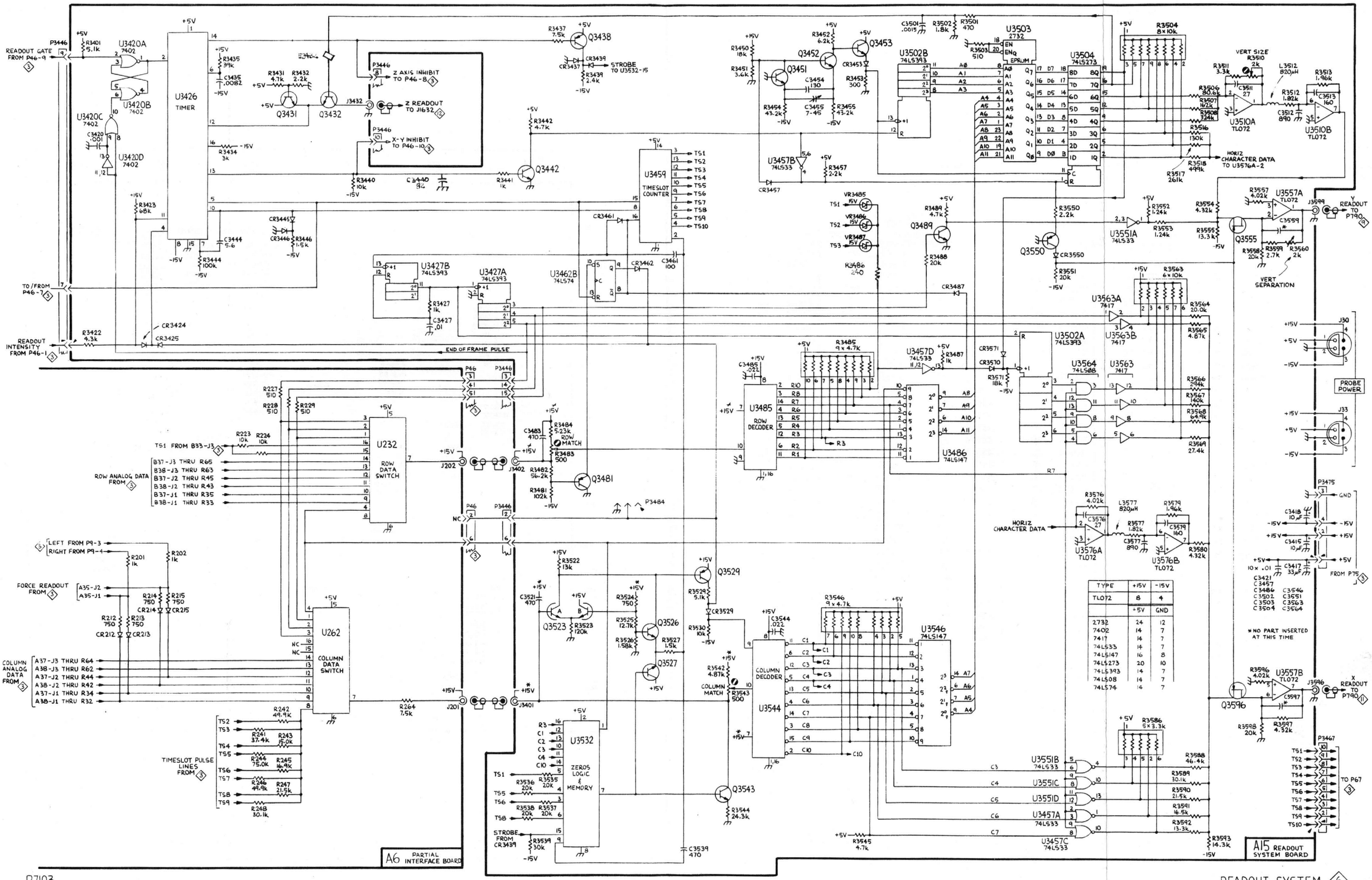




http://manoman.sqhill.com

| CKT NO | GRID COORD | CKT NO | GRID COORD | CKT NO | GRID COORD | CKT NO | GRID COORD | CKT NO | GRID COORD | CKT NO | GRID COORD |
|---|---|---|---|---|---|---|---|---|---|---|---|
| C3415 | 3E | CR3425 | 3E | Q3452 | 1D | R3481 | 3B | R3542 | 5A | R3597 | 2A |
| C3417 | 4E | CR3437 | 4F | Q3453 | 1D | R3482 | 3B | R3543 | 5B | R3598 | 2B |
| C3418 | 3E | CR3439 | 5F | Q3481 | 3B | R3483 | 4B | R3544 | 5B | | |
| C3420 | 2E | CR3445 | 2E | Q3489 | 2D | R3484 | 4B | R3545 | 5E | U3420 | 2F |
| C3421 | 4E | CR3446 | 3E | Q3523 | 3B | R3485 | 4B | R3546 | 5D | U3426 | 2D |
| C3427 | 4E | CR3453 | 2D | Q3526 | 4B | R3486 | 5E | R3550 | 1C | U3427 | 3D |
| C3435 | 2E | CR3455 | 2D | Q3527 | 6E | R3487 | 2D | R3551 | 1D | U3457 | 5B |
| C3440 | 2E | CR3457 | 2D | Q3529 | 5F | R3488 | 3E | R3552 | 6B | U3459 | 4E |
| C3444 | 2E | CR3461 | 5E | Q3543 | 6B | R3489 | 3D | R3553 | 6B | U3462 | 5E |
| C3454 | 2E | CR3462 | 5F | Q3550 | 1D | R3501 | 1E | R3554 | 2B | U3485 | 4B |
| C3457 | 5B | CR3487 | 4E | Q3555 | 3B | R3502 | 1E | R3555 | 4B | U3486 | 4C |
| C3461 | 5E | CR3529 | 5E | Q3596 | 3B | R3503 | 4C | R3557 | 2A | U3502 | 4D |
| C3483 | 3A | CR3550 | 1D | | | R3504 | 3C | R3558 | 2A | U3503 | 4C |
| C3485 | 4C | CR3570 | 3D | R3401 | 2E | R3506 | 3B | R3559 | 2A | U3504 | 3C |
| C3486 | 4C | CR3571 | 3D | R3422 | 3E | R3507 | 3B | R3560 | 2A | U3510 | 1B |
| C3501 | 2E | | | R3423 | 3E | R3508 | 3B | R3563 | 2C | U3532 | 5E |
| C3502 | 4D | E3432 | 1E | R3427 | 4E | R3510 | 3A | R3564 | 3B | U3544 | 5C |
| C3503 | 4D | | | R3431 | 1E | R3511 | 2B | R3565 | 3B | U3546 | 5D |
| C3504 | 3D | J3401 | 4A | R3432 | 1E | R3512 | 2B | R3566 | 2B | U3551 | 5C |
| C3511 | 1B | J3402 | 4A | R3434 | 3D | R3513 | 2B | R3567 | 3B | U3557 | 1B |
| C3512 | 2B | J3432 | 1E | R3435 | 2D | R3516 | 3B | R3568 | 3B | U3563 | 2C |
| C3513 | 2B | J3596 | 1C | R3437 | 4F | R3517 | 3B | R3569 | 2C | U3564 | 3D |
| C3521 | 3A | J3599 | 1B | R3439 | 4F | R3518 | 3B | R3571 | 4E | U3576 | 1C |
| C3539 | 5F | | | R3440 | 2E | R3522 | 3A | R3576 | 2C | | |
| C3544 | 5C | L3512 | 2B | R3441 | 3E | R3523 | 3A | R3577 | 2C | VR3485 | 5E |
| C3546 | 5F | L3577 | 2C | R3442 | 5E | R3524 | 3B | R3579 | 1C | VR3486 | 5E |
| C3551 | 5C | | | R3444 | 2E | R3525 | 4B | R3580 | 2C | VR3487 | 5E |
| C3559 | 2A | P3446 | 3E | R3446 | 3E | R3526 | 4B | R3586 | 6C | | |
| C3563 | 2E | P3467 | 3F | R3450 | 2D | R3527 | 5F | R3588 | 5B | | |
| C3564 | 3D | P3475 | 4F | R3451 | 2D | R3529 | 5E | R3589 | 5B | | |
| C3576 | 2C | P3484 | 1E | R3452 | 1D | R3530 | 5E | R3590 | 5B | | |
| C3577 | 2C | | | R3453 | 2D | R3535 | 5F | R3591 | 6B | | |
| C3579 | 1C | Q3417 | 4E | R3454 | 1E | R3536 | 4E | R3592 | 5B | | |
| C3597 | 2A | Q3431 | 1E | R3455 | 2D | R3537 | 5E | R3593 | 2C | | |
| | | Q3432 | 1E | R3457 | 1D | R3538 | 4E | R3596 | 2A | | |
| CR3424 | 3E | Q3438 | 4F | | | R3539 | 5F | | | | |
| | | Q3451 | 1D | | | | | | | | |

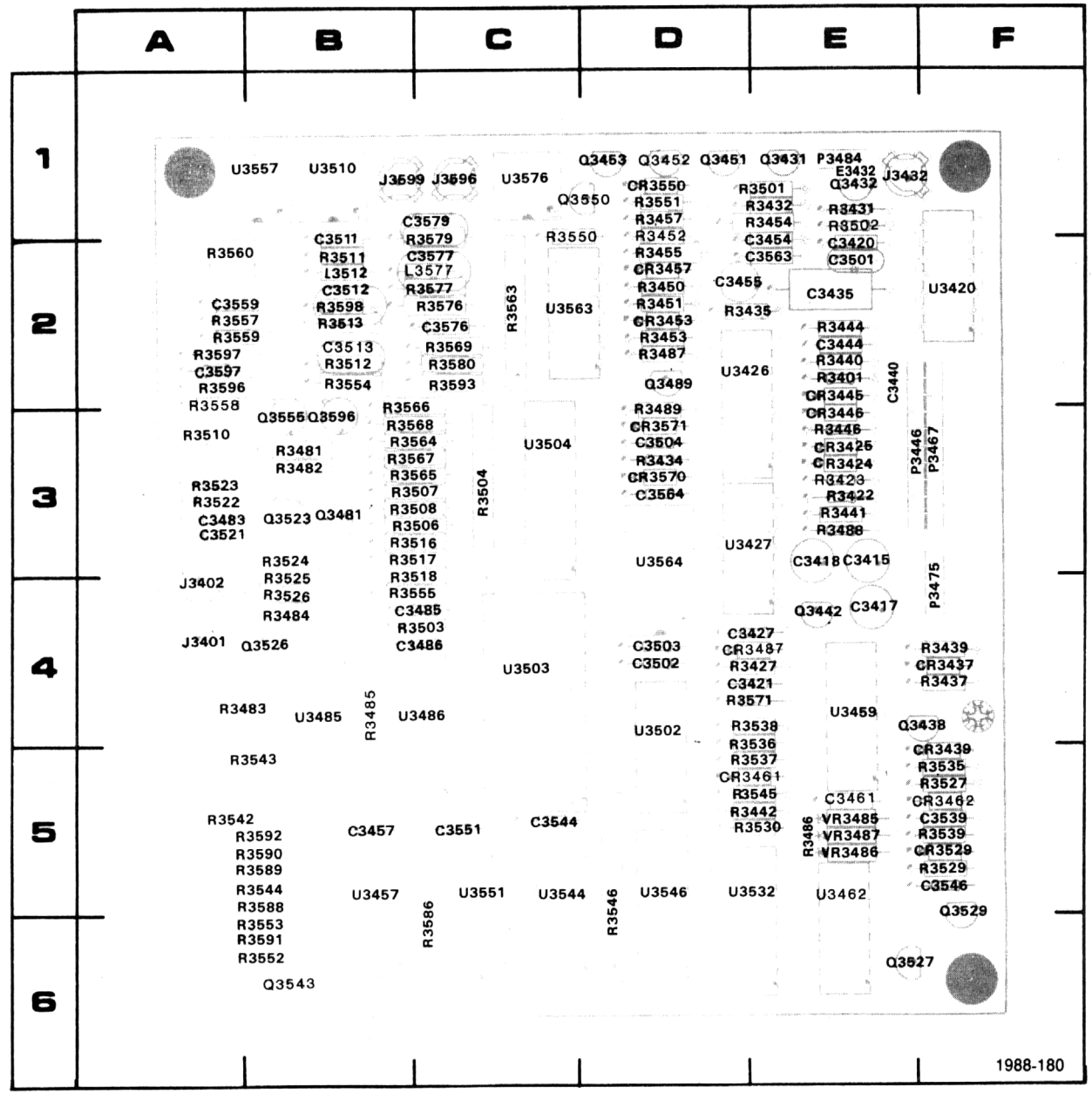




http://manoman.sghill.com

Tektronix®
COMMITTED TO EXCELLENCE

# MANUAL CHANGE INFORMATION

**Date:** 10/30/85 **Change Reference:** M56231

**Product:** R7103 Oscilloscope **Manual Part No.:** 070-5039-00

**DESCRIPTION** Manual Insert for Product Group 42

**These changes are effective at serial number B040595.**

## REPLACEABLE ELECTRICAL PARTS LIST CHANGES

**CHANGE TO:**

| | | |
|---|---|---|
| A24 | **670-5959-04** | CKT BOARD ASSY:CONTROL RECTIFIER |
| A24C52 | **285-1340-00** | **CAP.,FXD,MTLZD:0.01UF,10%,63V** |
| A24C66 | **285-1340-00** | **CAP.,FXD,MTLZD:0.01UF,10%,63V** |
| A24C67 | **290-0573-00** | **CAP.,FXD,ELCTLT:2.7UF,20%,50V** |
| A24C70 | **285-1338-00** | **CAP.,FXD,MTLZD:1UF,10%,50V** |
| A24C71 | **285-1338-00** | **CAP.,FXD,MTLZD:1UF,10%,50V** |
| A24C77 | **283-0084-00** | **CAP.,FXD,CER DI:270PF,5%,100V** |
| A24C78 | **283-0084-00** | **CAP.,FXD,CER DI:270PF,5%,100V** |
| A24P40 | **258-0534-00** | **WIRE,NONELECTRIC:0.025 THK X 0.025 WIDE** |
| A24P48 | **258-0534-00** | **WIRE,NONELECTRIC:0.025 THK X 0.025 WIDE** |
| A24P50 | **258-0534-00** | **WIRE,NONELECTRIC:0.025 THK X 0.025 WIDE** |
| A24P52 | **258-0534-00** | **WIRE,NONELECTRIC:0.025 THK X 0.025 WIDE** |
| A24P54 | **258-0534-00** | **WIRE,NONELECTRIC:0.025 THK X 0.025 WIDE** |
| A24R93 | **311-2273-00** | **RES.,VAR,NONWIR:2K OHM,20%,0.5W** |
| A24TP126 | **258-0534-00** | **WIRE,NONELECTRIC:0.025 THK X 0.025 WIDE** |

**ADD:**

| | | |
|---|---|---|
| A24C154 | 290-0898-01 | CAP.,FXD,ELCTLT:2600UF,+75−10%,35V |

**REMOVE:**

| | | |
|---|---|---|
| A23C154 | 290-0898-00 | CAP.,FXD,ELCTLT:2600UF,+75−10%,35V |

## DIAGRAM CHANGES

**14 CONVERTER/RECTIFIERS**

Change C67 from 2.2μF to 2.7μF.

Change C77 and C78 from SEL to 270.

Change C154 from 2200μF to 2600μF.

Change R93 from 2.5k to 2k.



http://manoman.sqhill.com

Tektronix®
COMMITTED TO EXCELLENCE

# MANUAL CHANGE INFORMATION

**Date:** 11/14/85 **Change Reference:** M53385/M59099 (Add. 1)

**Product:** R7103 Oscilloscope **Manual Part No.:** 070-5039-00

**DESCRIPTION** Manual Insert for Product Group 42

*The following change applies to the A15 Readout circuit board assembly parts list given in Manual Change Information insert M53385/M59099 for instruments with serial number B040592 and above.*

**CHANGE TO:**

| | | |
|---|---|---|
| A15 | **670-8622-01** | CKT BOARD ASSY:READOUT |



http://manoman.sqhill.com

Tektronix
COMMITTED TO EXCELLENCE

# MANUAL CHANGE INFORMATION

**Date:** 12/17/85 **Change Reference:** M58688

**Product:** R7103 Oscilloscope **Manual Part No.:** 070-5039-00

**DESCRIPTION** Manual Insert for Product Group 42

**These changes are effective at serial number B040639.**

## REPLACEABLE ELECTRICAL PARTS LIST CHANGES

**CHANGE TO:**

| | | |
|---|---|---|
| A25 | 670-5960-04 | CKT BOARD ASSY:LOW VOLTAGE REGULATOR |

**ADD:**

| | | |
|---|---|---|
| A25R122 | 315-0201-00 | RES,FXD,FILM:200 OHM,5%,0.25W |

## DIAGRAM CHANGES

**Figure 8-17. A25—Regulator Board assembly.**

Add R122 just below Q122 (board location 1F).

Add R122 to the locator table for ASSEMBLY A25, with schematic location 3D and board location 1F.

15 **Low-Voltage Regulators**

Add 200Ω resistor R122 between the base and emitter of Q122 (schematic location 3D).



http://manoman.sqhill.com

Tektronix®
COMMITTED TO EXCELLENCE

# MANUAL CHANGE INFORMATION

**Date:** 3/18/86 **Change Reference:** M60367

**Product:** R7103 Oscilloscope **Manual Part No.:** 070-5039-00

**DESCRIPTION** Manual Insert for Product Group 42

**These changes are effective at serial number B040666.**

*The following changes are associated with a previous change to the A15 Readout circuit board assembly at serial number B040592.*

## REPLACEABLE ELECTRICAL PARTS LIST CHANGES

*If the components indicated for change cannot be found in the Replaceable Electrical Parts List section of your manual, check for related change information at the rear of the manual.*

**CHANGE TO:**

| | | |
|---|---|---|
| A15 | 670-8622-02 | CKT BOARD ASSY:READOUT |
| R3457 | 315-0621-00 | RES.,FXD,FILM:620 OHM,5%,0.25W |
| R3550 | 315-0621-00 | RES.,FXD,FILM:620 OHM,5%,0.25W |
| R3551 | 315-0472-00 | RES.,FXD,FILM:4.7K OHM,5%,0.25W |

**ADD:**

| | | |
|---|---|---|
| C3441 | 281-0767-00 | CAP.,FXD,CER DI:330PF,20%,100V |
| C3559 | 281-0762-00 | CAP.,FXD,CER DI:27PF,20%,100V |
| C3559 | ----- ----- | (NOMINAL VALUE,SELECTED) |
| C3559 | 281-0808-00 | CAP.,FXD,CER DI:7PF,20%,100V |
| C3559 | ----- ----- | (C3559 SELECTABLE) |
| C3559 | 281-0811-00 | CAP.,FXD,CER DI:10PF,10%,100V |
| C3559 | ----- ----- | (C3559 SELECTABLE) |
| C3559 | 281-0797-00 | CAP.,FXD,CER DI:15PF,10%,100V |
| C3559 | ----- ----- | (C3559 SELECTABLE) |
| C3559 | 281-0759-00 | CAP.,FXD,CER DI:22PF,10%,100V |
| C3559 | ----- ----- | (C3559 SELECTABLE) |
| C3559 | 281-0819-00 | CAP.,FXD,CER DI:33PF,5%,50V |
| C3559 | ----- ----- | (C3559 SELECTABLE) |
| C3559 | 281-0763-00 | CAP.,FXD,CER DI:47PF,10%,100V |
| C3559 | ----- ----- | (C3559 SELECTABLE) |
| C3559 | 281-0798-00 | CAP.,FXD,CER DI:51PF,1%,100V |
| C3559 | ----- ----- | (C3559 SELECTABLE) |
| C3559 | 281-0799-00 | CAP.,FXD,CER DI:62PF,2%,100V |
| C3559 | ----- ----- | (C3559 SELECTABLE) |
| C3597 | 281-0762-00 | CAP.,FXD,CER DI:27PF,20%,100V |
| C3597 | ----- ----- | (NOMINAL VALUE,SELECTED) |
| C3597 | 281-0808-00 | CAP.,FXD,CER DI:7PF,20%,100V |
| C3597 | ----- ----- | (C3597 SELECTABLE) |



http://manoman.sqhill.com

DESCRIPTION

| | | |
|---|---|---|
| C3597 | 281-0811-00 | CAP.,FXD,CER DI:10PF,10%,100V |
| C3597 | ----- ----- | (C3597 SELECTABLE) |
| C3597 | 281-0797-00 | CAP.,FXD,CER DI:15PF,10%,100V |
| C3597 | ----- ----- | (C3597 SELECTABLE) |
| C3597 | 281-0759-00 | CAP.,FXD,CER DI:22PF,10%,100V |
| C3597 | ----- ----- | (C3597 SELECTABLE) |
| C3597 | 281-0819-00 | CAP.,FXD,CER DI:33PF,5%,50V |
| C3597 | ----- ----- | (C3597 SELECTABLE) |
| C3597 | 281-0763-00 | CAP.,FXD,CER DI:47PF,10%,100V |
| C3597 | ----- ----- | (C3597 SELECTABLE) |
| C3597 | 281-0798-00 | CAP.,FXD,CER DI:51PF,1%,100V |
| C3597 | ----- ----- | (C3597 SELECTABLE) |
| C3597 | 281-0799-00 | CAP.,FXD,CER DI:62PF,2%,100V |
| C3597 | ----- ----- | (C3597 SELECTABLE) |

## DIAGRAM CHANGES

*If the diagrams indicated for change cannot be located in Section 8 of your manual, check for related change information at the rear of the manual.*

### Assembly A15 (SN B040592 & UP) & component locator

**Figure 8-8A. A15—Readout System Board assembly (SN B040592 & Up).**

Add C3441 across R3441 on the component locator diagram of Figure 8-8A.

### READOUT SYSTEM (SN B040592 & UP) ◇6

Add 330 pF capacitor C3441 across resistor R3441.

Change R3457 and R3550 from 2.2k to 620.

Change R3551 from 20k to 4.7k.

Add **SEL** (selectable) as the value of C3559 and C3597.



http://manoman.sqhill.com

Tektronix®
COMMITTED TO EXCELLENCE

# MANUAL CHANGE INFORMATION

**Date:** 5-1-86 **Change Reference:** M60732

**Product:** R7103 Oscilloscope **Manual Part No.:** 070-5039-00

**DESCRIPTION** Manual Insert for Product Group 42

**These changes are effective at serial number B040664.**

## REPLACEABLE ELECTRICAL PARTS LIST CHANGES

**CHANGE TO:**

| | | |
|---|---|---|
| A15 | 670-8622-04 | CIRCUIT BOARD ASSY:READOUT |
| C3487 | 281-0770-00 | CAP,FXD,CER,DI:0.001μF,20%,100V |

## DIAGRAM CHANGES

**READOUT SYSTEM B040592-UP** ◇6◇

Add C3487 between ground and pin 13 of U3457D.

**ASSEMBLY A15**

**Figure 8-8A. A15—Readout System Board assembly (SN B040592-Up).**

Add C3487 at location C5 as shown in the following diagram.



http://manoman.sqmm.com

DESCRIPTION

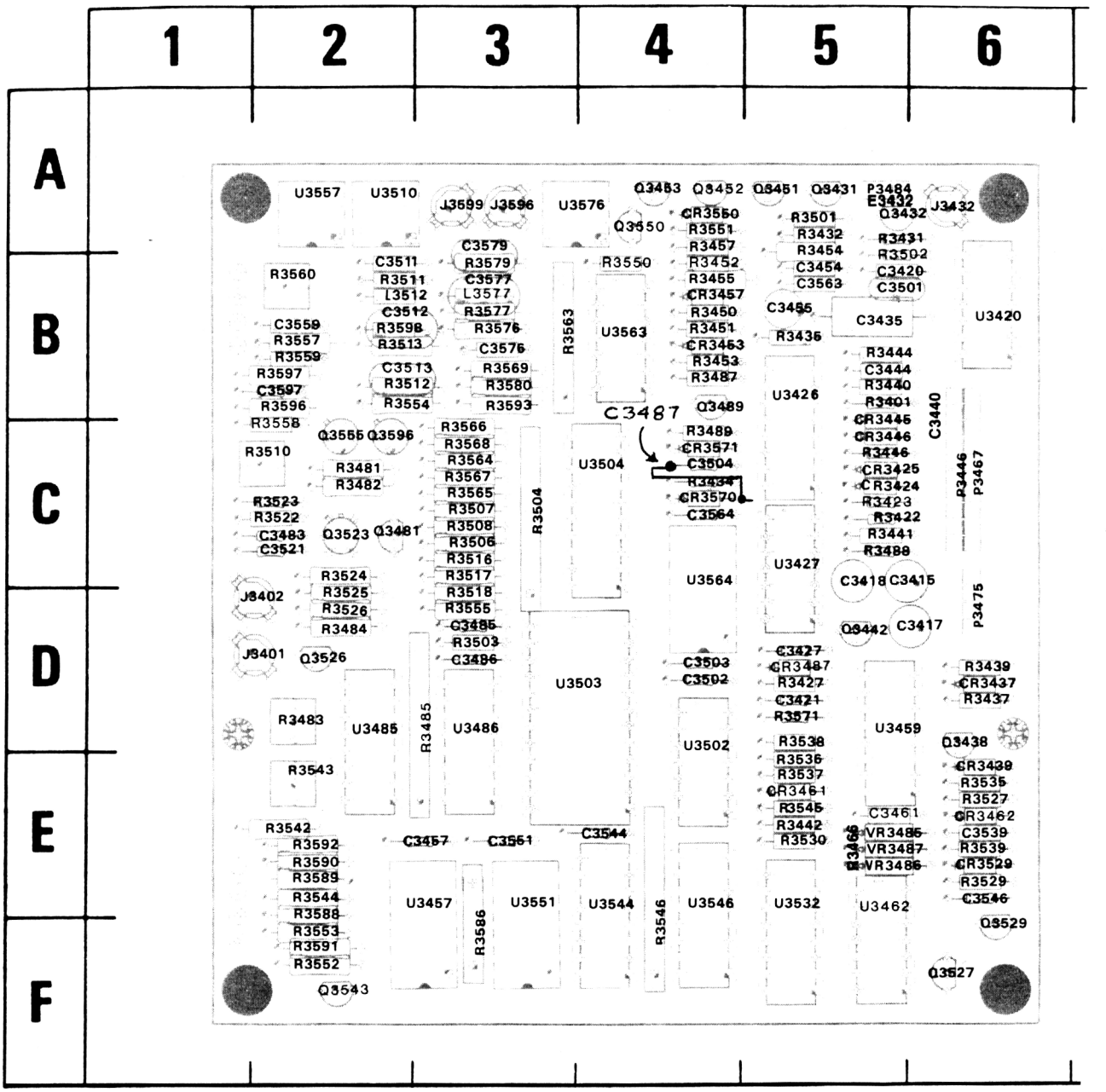




http://manoman.sqhill.com

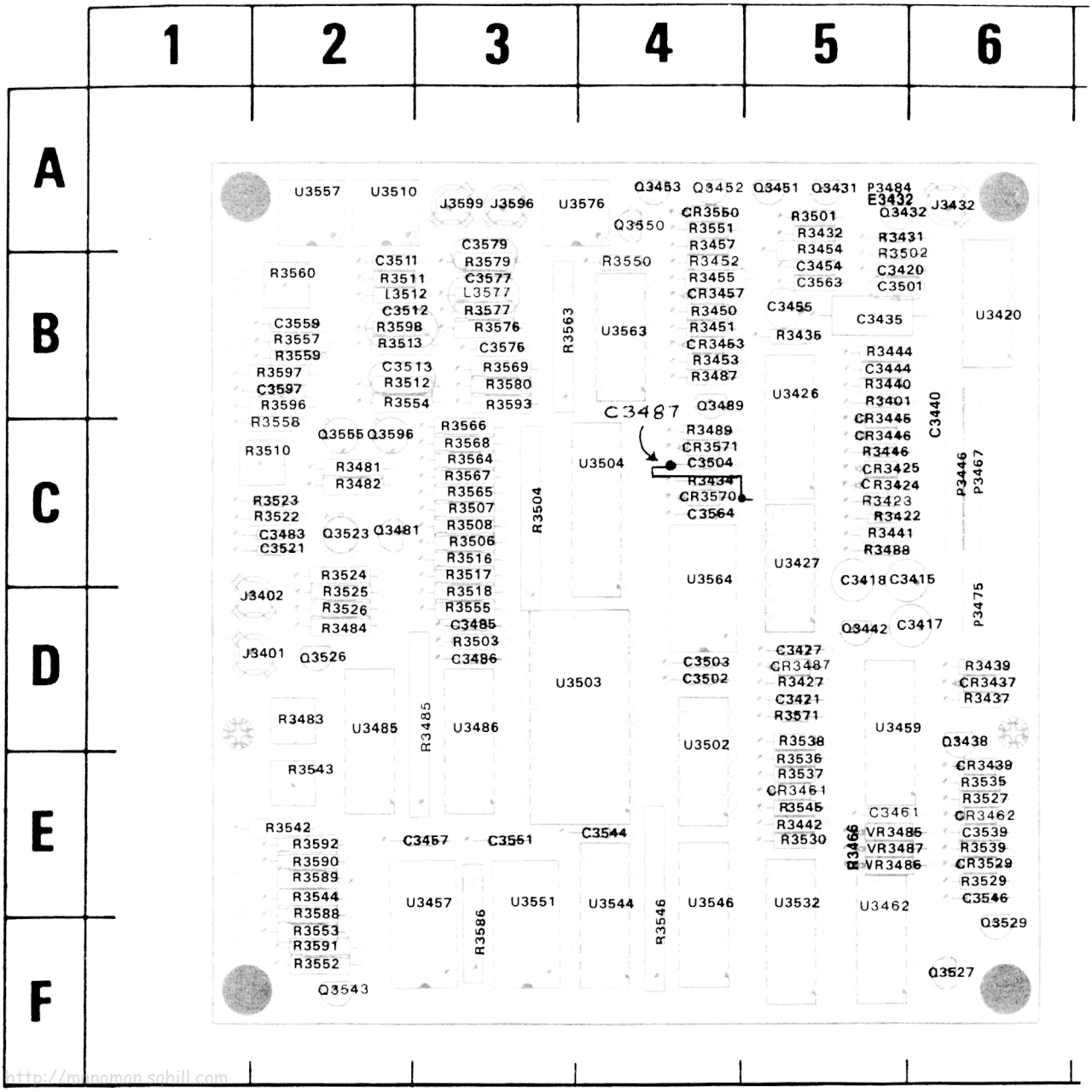

http://manoman.schill.com

Tektronix
COMMITTED TO EXCELLENCE

# MANUAL CHANGE INFORMATION

Date: 6-6-86 Change Reference: M59522

Product: R7103 OSCILLOSCOPE Manual Part No.: 070-5039-00

DESCRIPTION Product Group 42

These changes are effective at serial number B040661.

REPLACEABLE ELECTRICAL PARTS LIST CHANGES

CHANGE TO:

| | | |
|---|---|---|
| A15 | 670-8622-01 | CIRCUIT BD ASSY:READOUT |
| A15R3539 | 315-0104-00 | RES.,FXD,FILM:100K OHM,5%,0.25W |

R3539 is located on the Readout System Board Assembly and is shown on diagram ◇6◇ READOUT SYSTEM (SNB040592-UP).



http://manoman.sqhill.com

Tektronix
COMMITTED TO EXCELLENCE

# MANUAL CHANGE INFORMATION

Date: 6-11-86 Change Reference: M59201

Product: R7103 OSCILLOSCOPE Manual Part No.: 070-5039-00

DESCRIPTION Product Group 42

These changes are effective at serial number B040673.

REPLACEABLE ELECTRICAL PARTS LIST CHANGES

CHANGE TO:

| | | |
|---|---|---|
| A25U15 | 156-0067-00 | MICROCKT,LINEAR:OPNL AMPL,SEL,741C |
| A25U45 | 156-0067-00 | MICROCKT,LINEAR:OPNL AMPL,SEL,741C |



http://manoman.sqhill.com

Tektronix
COMMITTED TO EXCELLENCE

# MANUAL CHANGE INFORMATION

Manual Insert for Product Group 42

PRODUCT: R7103 Oscilloscope DATE: 7/15/86

CHANGE REFERENCE: M61215 MANUAL PART NO.: 070-5039-00

**These changes are effective at serial number B040691.**

## REPLACEABLE ELECTRICAL PARTS LIST CHANGES

CHANGE TO:

| | | |
|---|---|---|
| A1 | 670-4895-21 | CKT BOARD ASSY:FRONT PANEL |
| A1C1935 | 281-0759-00 | CAP,FXD,CER DI:22 PF,10%,100V |
| A1R1914 | 315-0201-00 | RES,FXD,FILM:200 OHM,5%,0.25W |

## DIAGRAM CHANGES

7 Signals Out

Change C1935 from 15 to 22 pF (location 3D).

Change R1914 from 470 to 200 Ω (location 3D).



http://manoman.sqhill.com

Tektronix®
COMMITTED TO EXCELLENCE

# MANUAL CHANGE INFORMATION

Date: 9/18/86 Change Reference: M59082

Product: R7103 Manual Part No.: 070-5039-00

DESCRIPTION PG 42

THESE CHANGES ARE EFFECTIVE AT SN B030540

REPLACEABLE ELECTRICAL PARTS LIST
CHANGES

CHANGE TO:

| | | |
|---|---|---|
| A19 | 670-4771-21 | CIRCUIT BD ASSY:HORIZ AMP |
| A19 | 672-0140-01 | CIRCUIT BD ASSY:HORIZ |
| C1036 | 281-0204-00 | CAP,VAR,PLASTIC,2-22 PF,100V |



http://manoman.sqhill.com

Tektronix®
COMMITTED TO EXCELLENCE

# MANUAL CHANGE INFORMATION

Date: 9/19/86 Change Reference: M58165

Product: R7103 Manual Part No.: 070-5039-00

DESCRIPTION PG 42

THESE CHANGES ARE EFFECTIVE AT SN B040674

REPLACEABLE ELECTRICAL PARTS
LIST CHANGES

CHANGE TO:

| | | |
|---|---|---|
| A17 | 670-4770-06 | CIRCUIT BD ASSY:VERTICAL AMPL |
| R705 | 311-0605-04 | RES,VAR,NONWW,TRMR,200 OHM,0.5W |



http://manoman.sqhill.com

Tektronix®
COMMITTED TO EXCELLENCE

# MANUAL CHANGE INFORMATION

Date: 10/1/86 Change Reference: C4/1086

Product: R7103 Oscilloscope Manual Part No.: 070-5039-00

## DESCRIPTION PG 42

THESE CHANGES ARE EFFECTIVE FOR ALL SERIAL NUMBERS.

### REPLACEABLE ELECTRICAL PARTS LIST CHANGES

CHANGE TO:

| | | |
|---|---|---|
| A14R232 | 322-0170-00 | RES,FXD,FILM:576 OHM,1%,0.25W |
| A14R235 | 321-0202-00 | RES,FXD,FILM:1.24K OHM,1%,0.125W |

REMOVE:

| | | |
|---|---|---|
| A6CR216 | 152-0141-02 | SEMICOND DVC,DI:SW,SI,30V,150MA,30V |
| A6CR217 | 152-0141-02 | SEMICOND DVC,DI:SW,SI,30V,150MA,30V |
| A6CR218 | 152-0141-02 | SEMICOND DVC,DI:SW,SI,30V,150MA,30V |

### DIAGRAM CHANGES

ADD:

A14C254 to Fig. 8-7. A14-Trigger Selector Board Assembly.
C254 is added from the collector of Q254 to J201.

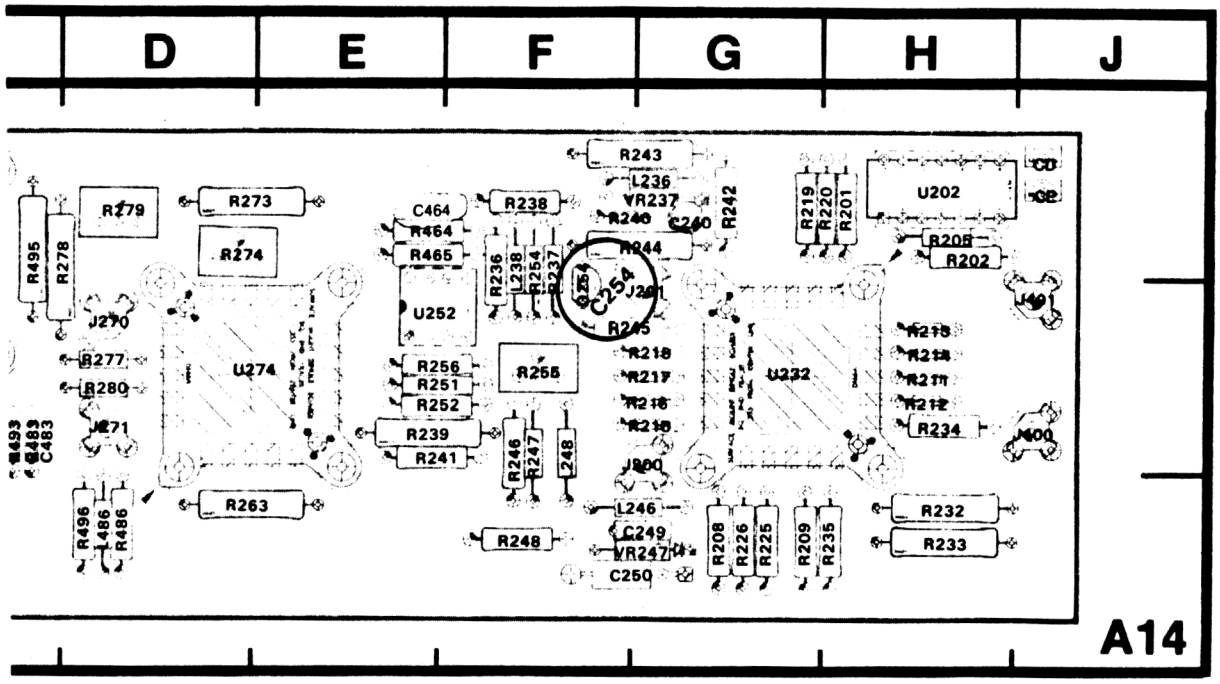




http://manoman.sqhill.com

Product R7103 Date: 10/1/86 Change Reference C4/1086

## DESCRIPTION

CHANGE:

R234 to R232

R232 to R234

TRIGGER SELECTOR (5)

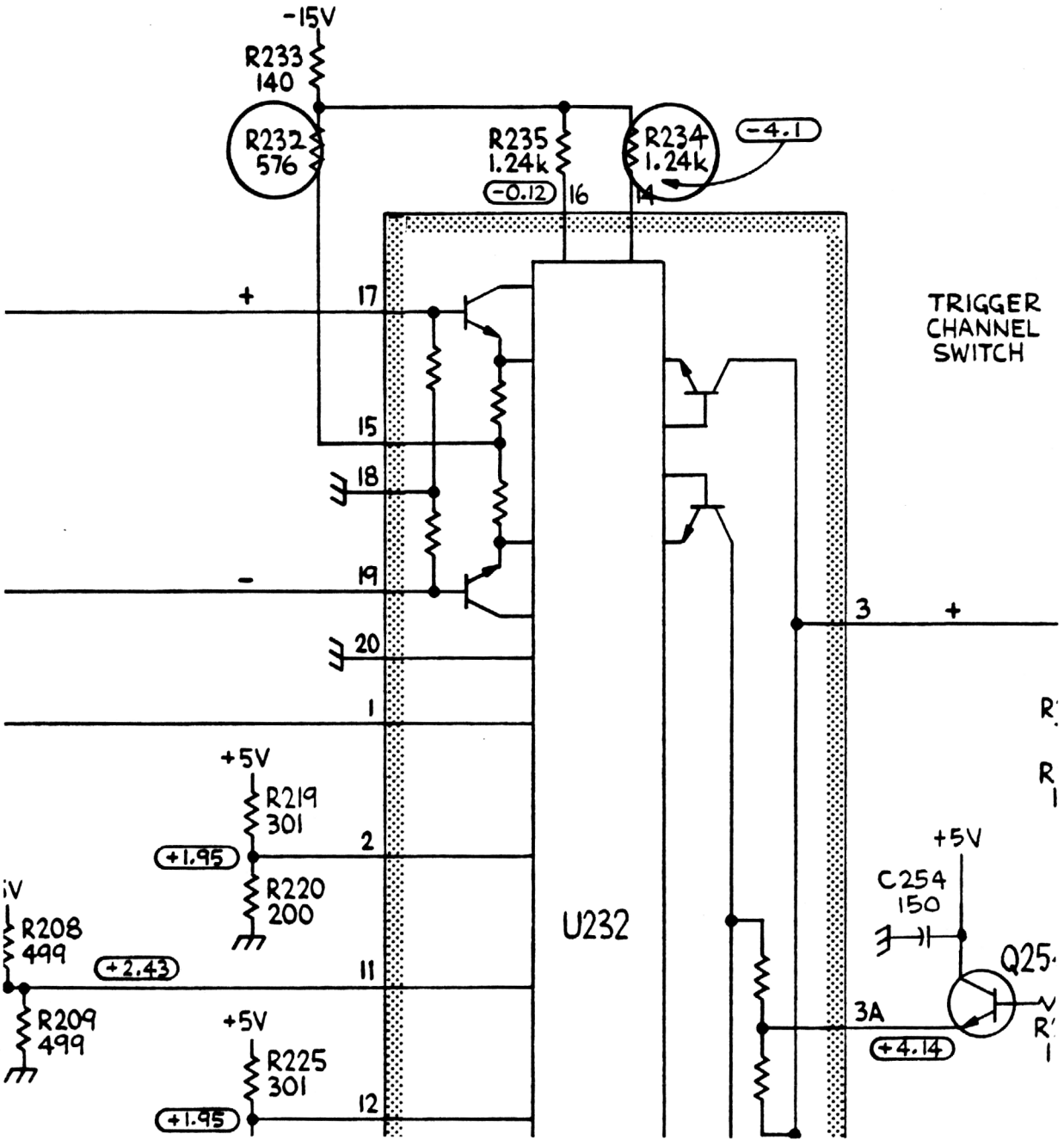




http://manoman.sqhill.com

DESCRIPTION

CHANGE:

R242 from 49.9K to 51K
R243 from 15.0K to 13K
R245 from 16.9K to 15.8K
R246 from 49.9K to 51K
R247 from 21.5K to 20.5K

ADD:

CR243
CR245
CR247
W241

READOUT SYSTEM 6

S/N B040592 & Up

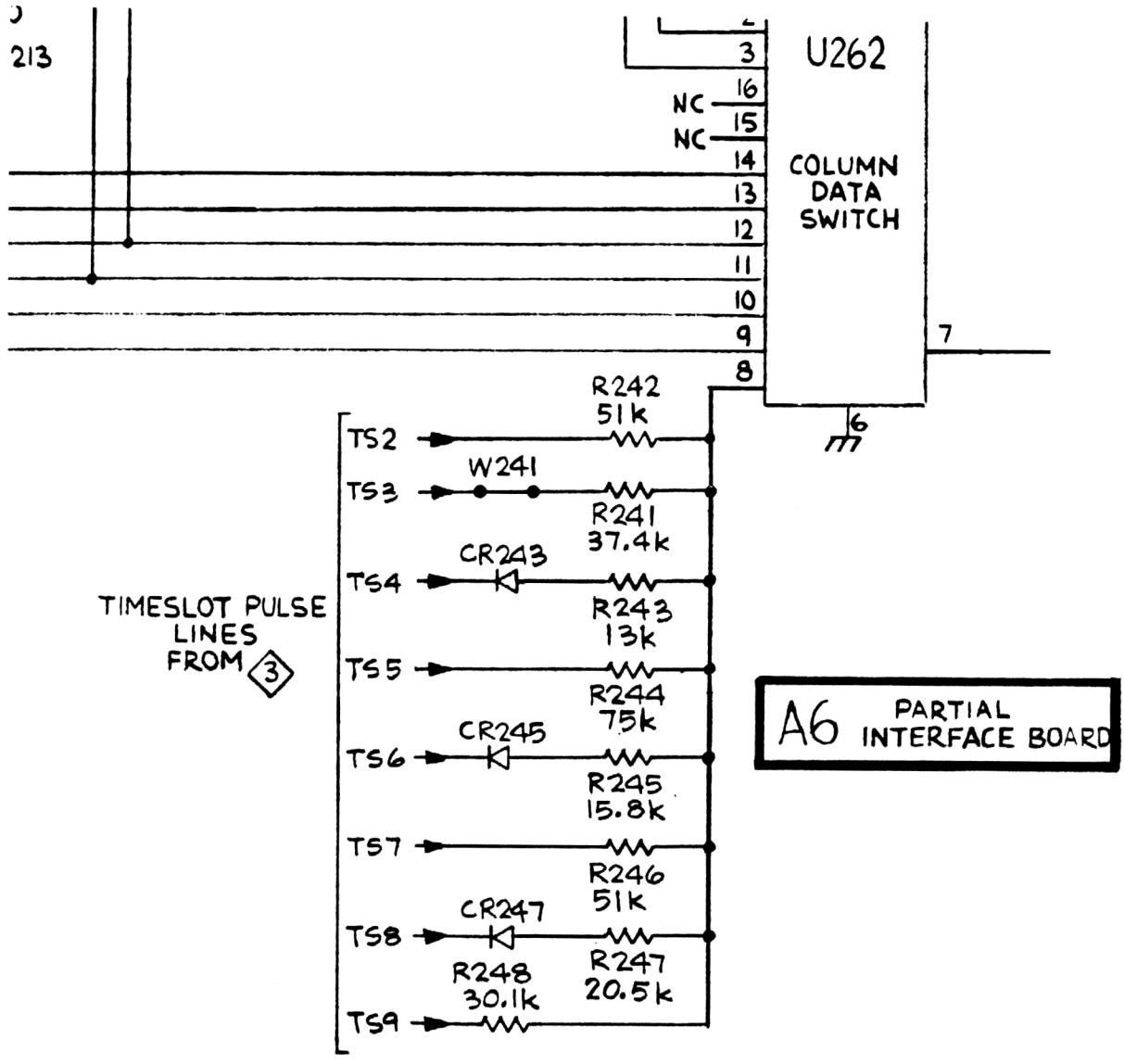




http://manoman.sqhill.com

# MANUAL CHANGE INFORMATION

Tektronix
COMMITTED TO EXCELLENCE

Date: 10-21-86 Change Reference: M60722

Product: R7103 OSCILLOSCOPE Manual Part No.: 070-5039-00

**DESCRIPTION** Product Group 42

These changes are effective at serial number B050776.

REPLACEABLE ELECTRICAL PARTS LIST CHANGES

CHANGE TO:

| | | |
|---|---|---|
| A17VR852 | 152-0683-01 | SEMICOND DVC,DI:ZEN,SI,7.5V,5%,1.0W,UNITRODE |
| A17VR862 | 152-0683-01 | SEMICOND DVC,DI:ZEN,SI,7.5%,5%,1.0W,UNITRODE |

A17 VERTICAL AMPLIFIER CIRCUIT BOARD

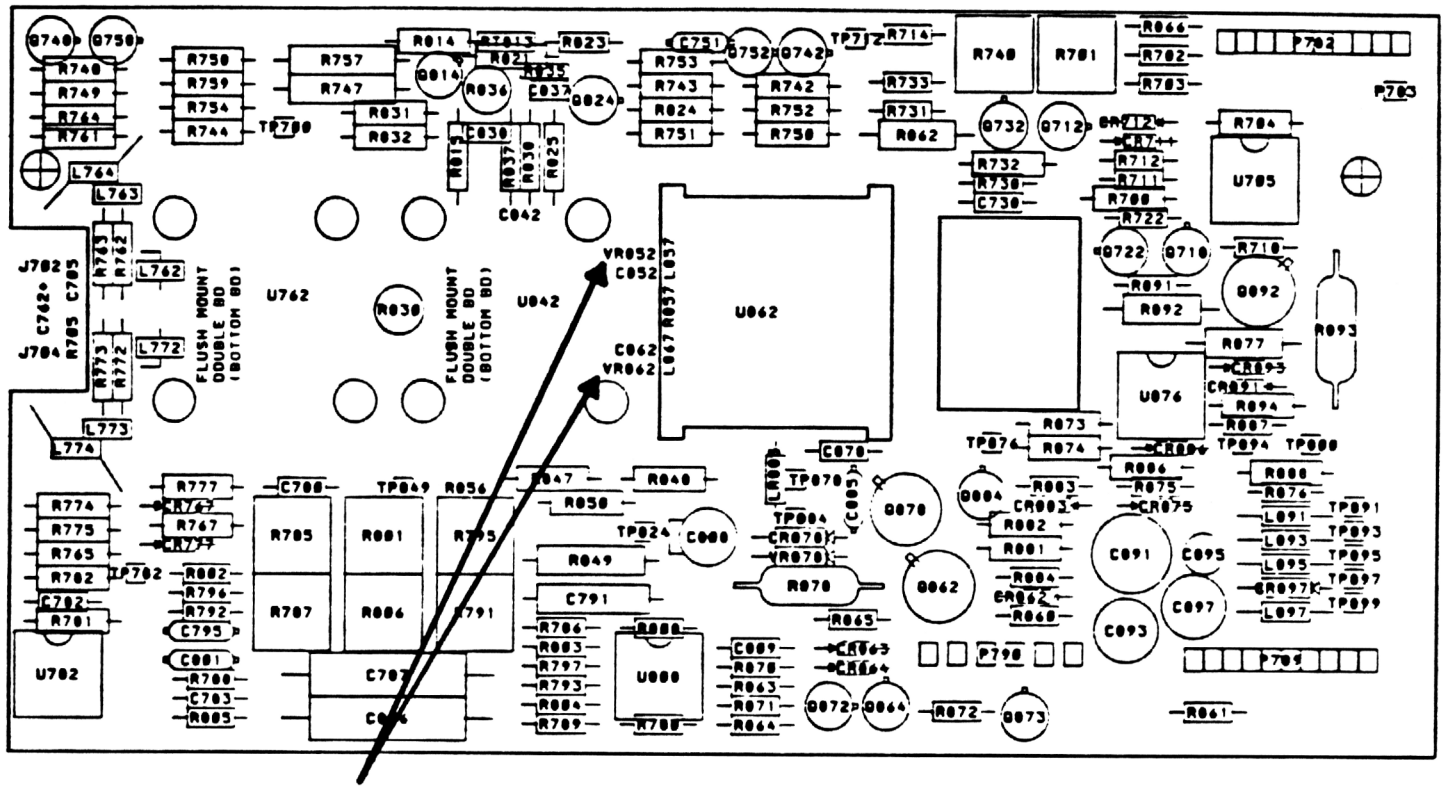


VR852,VR862

REMOVE: 152-0683-00
ADD: 152-0683-01

NOTE: Add diodes on top of C852 and C862 rather than on the sides as previously done.



http://manoman.sqhill.com

Tektronix®
COMMITTED TO EXCELLENCE

# MANUAL CHANGE INFORMATION

Date: 10-29-86 Change Reference: M58944

Product: R7103 OSCILLOSCOPE Manual Part No.: 070-5039-00

**DESCRIPTION** Product Group 42

These changes are effective at serial number B050770.

REPLACEABLE ELECTRICAL PARTS LIST CHANGES

CHANGE TO:

| | | |
|---|---|---|
| A15U3427 | 156-1172-02 | MICROCKT,DGTL:DUAL 4-STAGE BIN CNTR,SCRN,74LS393 |
| A15U3502 | 156-1172-02 | MICROCKT,DGTL:DUAL 4-STAGE BIN CNTR,SCRN,74LS393 |

The above parts are located on the Readout System Board assembly Fig. 8-8A



http://manoman.sqhill.com

Tektronix
COMMITTED TO EXCELLENCE

# MANUAL CHANGE INFORMATION

Date: 11-3-86 Change Reference: M62292

Product: R7103 OSCILLOSCOPE Manual Part No.: 070-5039-00

**DESCRIPTION** Product Group 42

These changes are effective at serial number B050780.

REPLACEABLE ELECTRICAL PARTS LIST CHANGES

CHANGE TO:

| | | |
|---|---|---|
| A14 | 670-8409-02 | CIRCUIT BD ASSY:TRIG SEL |
| A14C483 | 283-0157-00 | CAP.,FXD,CER DI:7PF,5%,50V (NOMINAL VALUE,SELECTABLE) |
| A14C483 | 283-0140-00 | CAP.,FXD,CER DI:4.7PF,± 0.25PF,50V (C483 SELECTABLE) |
| A14C483 | 283-0260-00 | CAP.,FXD,CER DI:5.6PF,± 0.25PF,200V (C483 SELECTABLE) |
| A14C483 | 283-0175-00 | CAP.,FXD,CER DI:10PF,5%,200V (C483 SELECTABLE) |
| A14C483 | 283-0168-00 | CAP.,FXD,CER DI:12PF,5%,100V (C483 SELECTABLE) |
| A14C483 | 283-0069-00 | CAP.,FXD,CER DI:15PF,20%,50V (C483 SELECTABLE) |
| A14C483 | 283-0159-00 | CAP.,FXD,CER DI:18PF,5%,50V |
| A14C493 | 283-0157-00 | CAP.,FXD,CER DI:7PF,5%,50V (NOMINAL VALUE,SELECTABLE) |
| A14C493 | 283-0140-00 | CAP.,FXD,CER DI:4.7PF,± 0.25PF,50V (C493 SELECTABLE) |
| A14C493 | 283-0260-00 | CAP.,FXD,CER DI:5.6PF,+ 0.25PF,200V (C493 SELECTABLE) |
| A14C493 | 283-0175-00 | CAP.,FXD,CER DI:10PF,5%,200V (C493 SELECTABLE) |
| A14C493 | 283-0168-00 | CAP.,FXD,CER DI:12PF,5%,100V (C493 SELECTABLE) |
| A14C493 | 283-0069-00 | CAP.,FXD,CER DI:15PF,20%,50V (C493 SELECTABLE) |
| A14C493 | 283-0159-00 | CAP.,FXD,CER DI:18PF,5%,50V (C493 SELECTABLE) |
| A14L486 | 108-0682-00 | COIL,RF:FIXED,66NH (L486 SELECTABLE) |
| A14L486 | 108-0733-00 | COIL,RF:FIXED,113 NH (L486 SELECTABLE) |
| A14L486 | 108-0170-01 | COIL,RF:FIXED,360NH (L486 SELECTABLE) |
| A14L486 | 108-0262-00 | COIL,RF:FIXED,510NH (L486 SELECTABLE) |

Note: C483, C493 and L486 are selected for optimum bandwidth and signal aberrations.



http://manoman.sqhill.com

DESCRIPTION

ADD:

| | | |
|---|---|---|
| A14C465 | 283-0330-00 | CAP.,FXD,CER DI:100PF,5%,50V |
| A14R466 | 313-1510-00 | RES.,FXD,FILM:51 OHM,5%,0.2W |

REMOVE:

| | | |
|---|---|---|
| A14C464 | 283-0175-00 | CAP.,FXD,CER DI:10PF,5%,200V |

Figure 8-7 A14--Trigger Selector Board assembly.

ADD: C465 and R466 as shown below.

REMOVE: C464

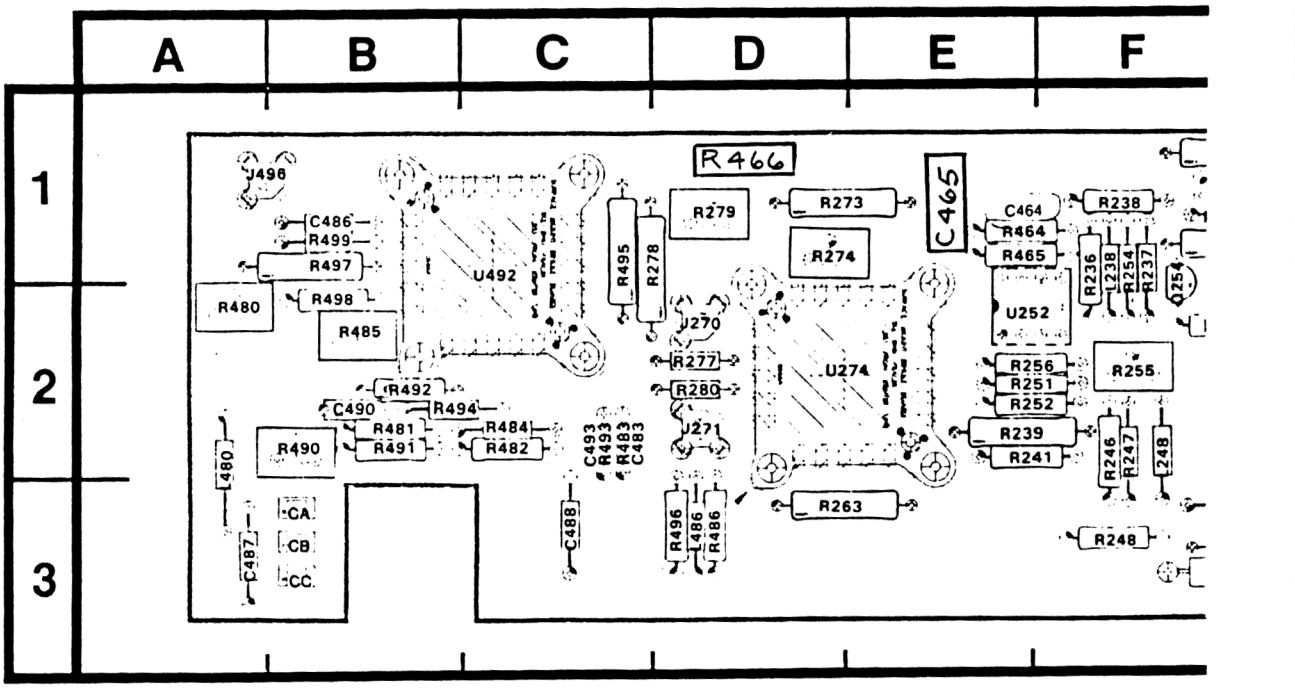


**Figure 8-7. A14—Trigger Selector Board assembly.**



http://manoman.sqhill.com

DESCRIPTION

SCHEMATIC CHANGES

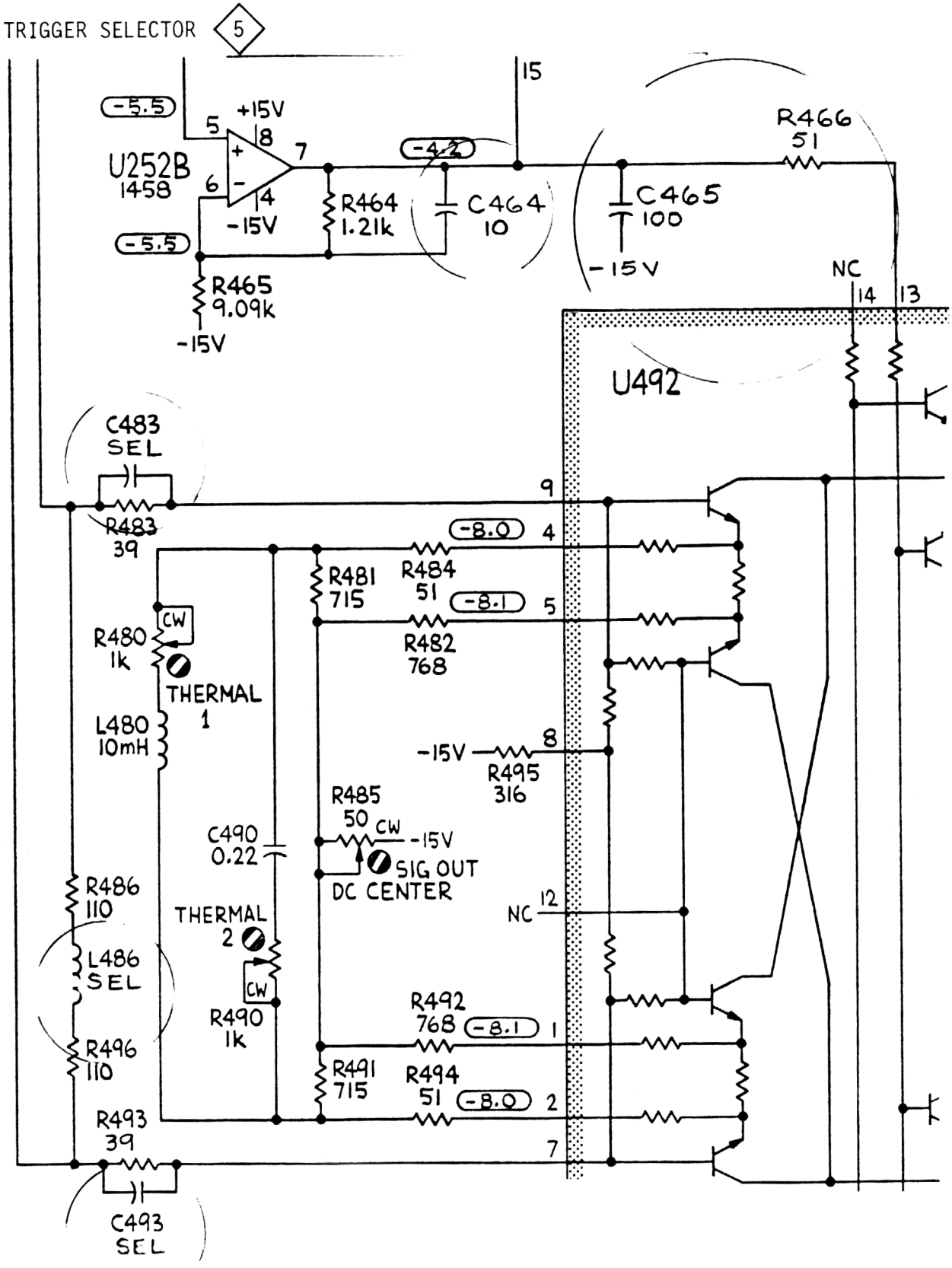




http://manoman.sqhill.com

Tektronix
COMMITTED TO EXCELLENCE

# MANUAL CHANGE INFORMATION

Date: 12-8-86 Change Reference: M61521

Product: R7103 OSCILLOSCOPE Manual Part No.: 070-5039-00

DESCRIPTION Product Group 42

These changes are effective at serial number B050794.

REPLACEABLE ELECTRICAL PARTS LIST CHANGES

REMOVE:

| | | |
|---|---|---|
| A23A1TP31 | 214-0579-00 | TERM,TEST POINT:BRS CD PL |
| A23A1TP38 | 214-0579-00 | TERM,TEST POINT:BRS CD PL |

Figure 8-15. A23--Inverter Board assembly.

REMOVE: TP31 and TP38

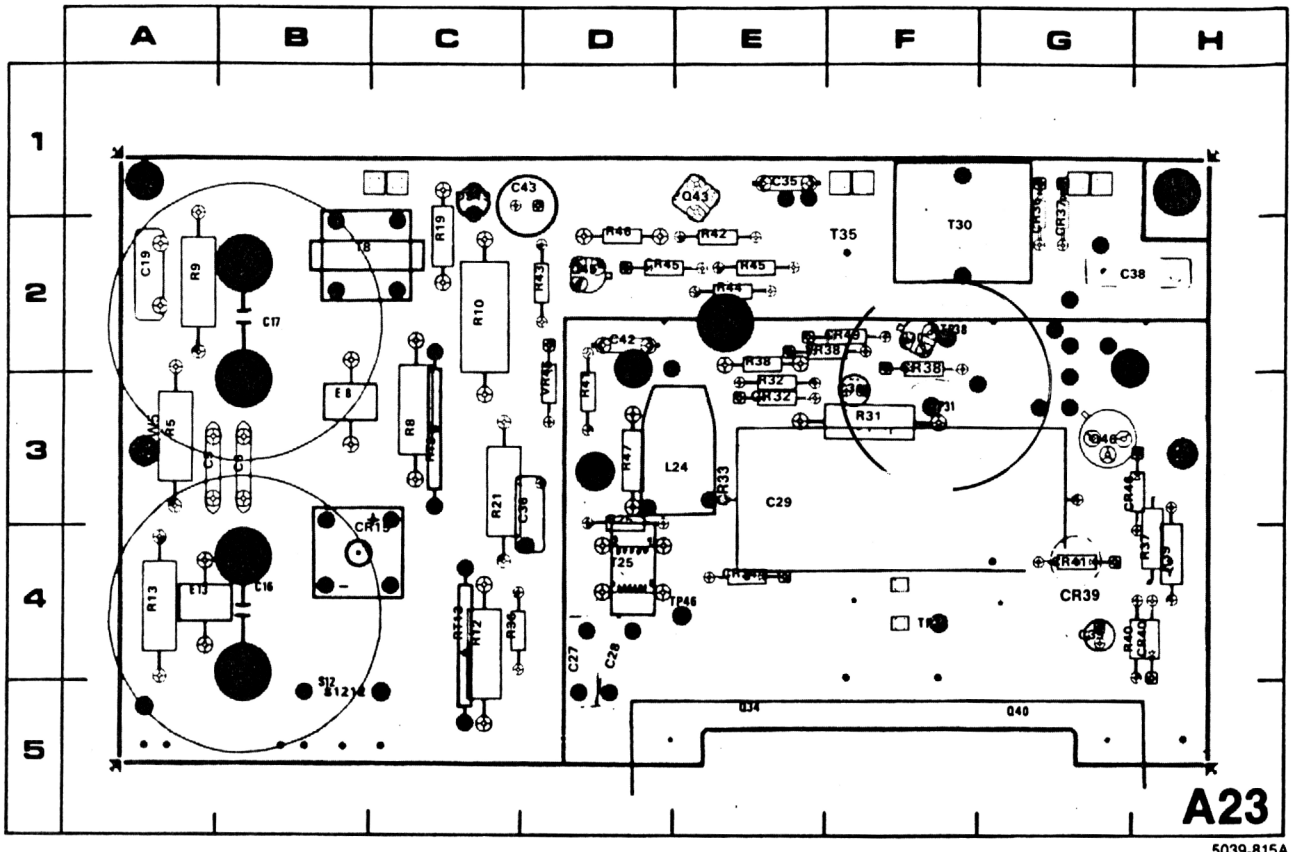


**Figure 8-15. A23—Inverter Board assembly.**

DIAGRAM 14 Converter/Rectifiers

REMOVE: TP31 and TP38 shown on A23 INVERTER BOARD



http://manoman.sqhill.com

Tektronix®
COMMITTED TO EXCELLENCE

# MANUAL CHANGE INFORMATION

Date: 12/17/86 Change Reference: C5/1286

Product: R7103 OSCILLOSCOPE Manual Part No.: 070-5039-00

**DESCRIPTION** Product Group 42

These changes are effective for all serial numbers.

REPLACEABLE ELECTRICAL PARTS LIST CHANGES

ADD:

CHASSIS PARTS LIST

| | | |
|---|---|---|
| Q28 | 151-0656-00 | TRANSISTOR:NPN,SI,TO220 |
| Q58 | 151-0657-00 | TRANSISTOR:PNP,SI,TO220 |
| Q74 | 151-0656-00 | TRANSISTOR:NPN,SI,TO220 |
| Q94 | 151-0657-00 | TRANSISTOR:PNP,SI,TO220 |
| Q122 | 151-0349-00 | TRANSISTOR:NPN,SI,SEL TO127 |
| Q126 | 151-0477-01 | TRANSISTOR:SCREENED |

The above parts are shown on Fig. 8-17 A25 Regulator Board assembly and on Diagram ◇15◇ Low-Voltage Regulators.



http://manoman.sqhill.com

Tektronix®
COMMITTED TO EXCELLENCE

# MANUAL CHANGE INFORMATION

Date: 1/9/87 Change Reference: M62752

Product: R7103 OSCILLOSCOPE Manual Part No.: 070-5039-00

**DESCRIPTION** Product Group 42

These changes are effective at serial number B050801.

REPLACEABLE ELECTRICAL PARTS LIST CHANGES

CHANGE TO:

| | | |
|---|---|---|
| A13 | 670-8408-01 | CIRCUIT BD ASSY:LOGIC |
| A13R452 | 315-0134-00 | RES.,FXD,FILM:130K OHM,5%,0.25W |

ADD:

| | | |
|---|---|---|
| A13R454 | 315-0202-00 | RES.,FXD,FILM:2K OHM,5%,0.25W |
| A13R455 | 315-0102-00 | RES.,FXD,FILM:1K OHM,5%,0.25W |

REPLACEABLE MECHANICAL PARTS LIST CHANGES

ADD:

| | | |
|---|---|---|
| Fig. 3-83 | 162-0026-00 | 0.75",INSUL,SLVG,ELECT,0.059ID,CLEAR |



http://manoman.sqhill.com

DESCRIPTION

Figure 8-6 A13--Logic Board assembly.
ADD: R454 and R455 as shown below.

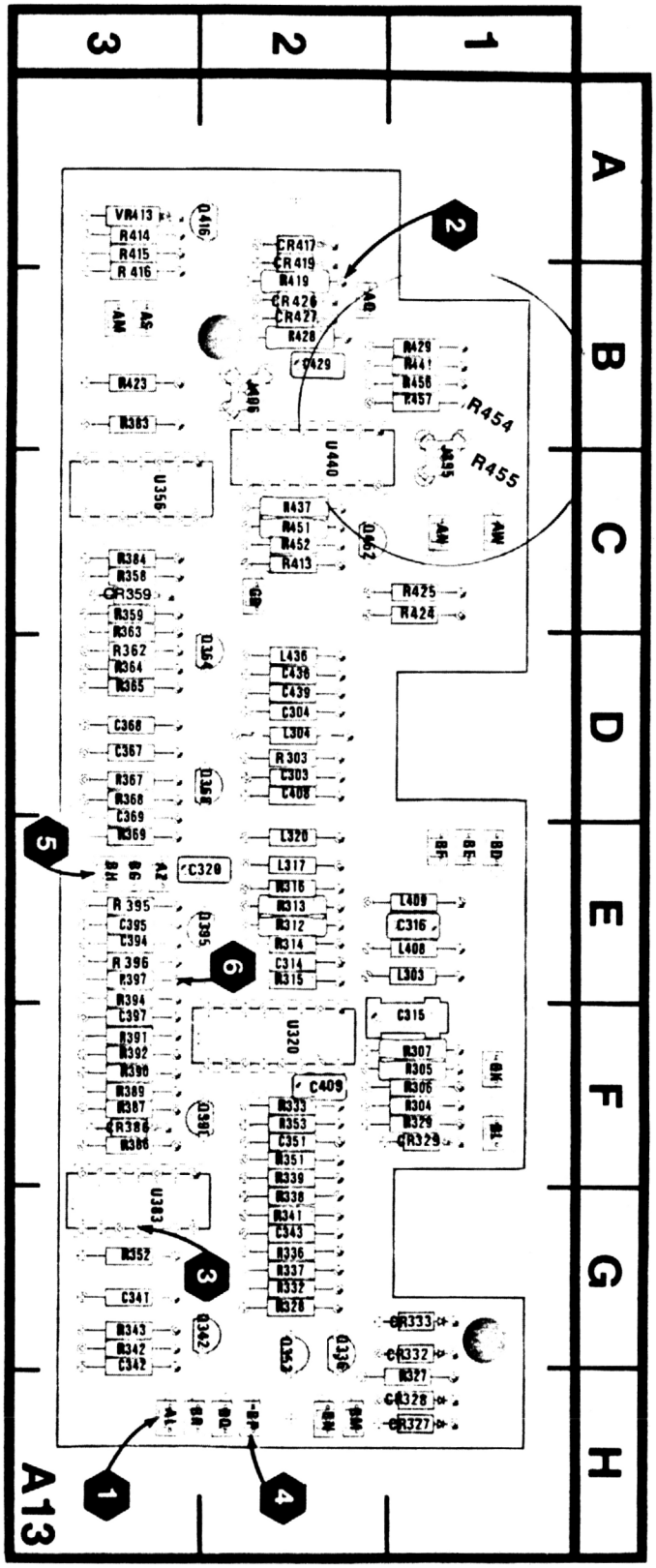


Figure 8-6. A13—Logic Board assembly.



http://manoman.sghill.com

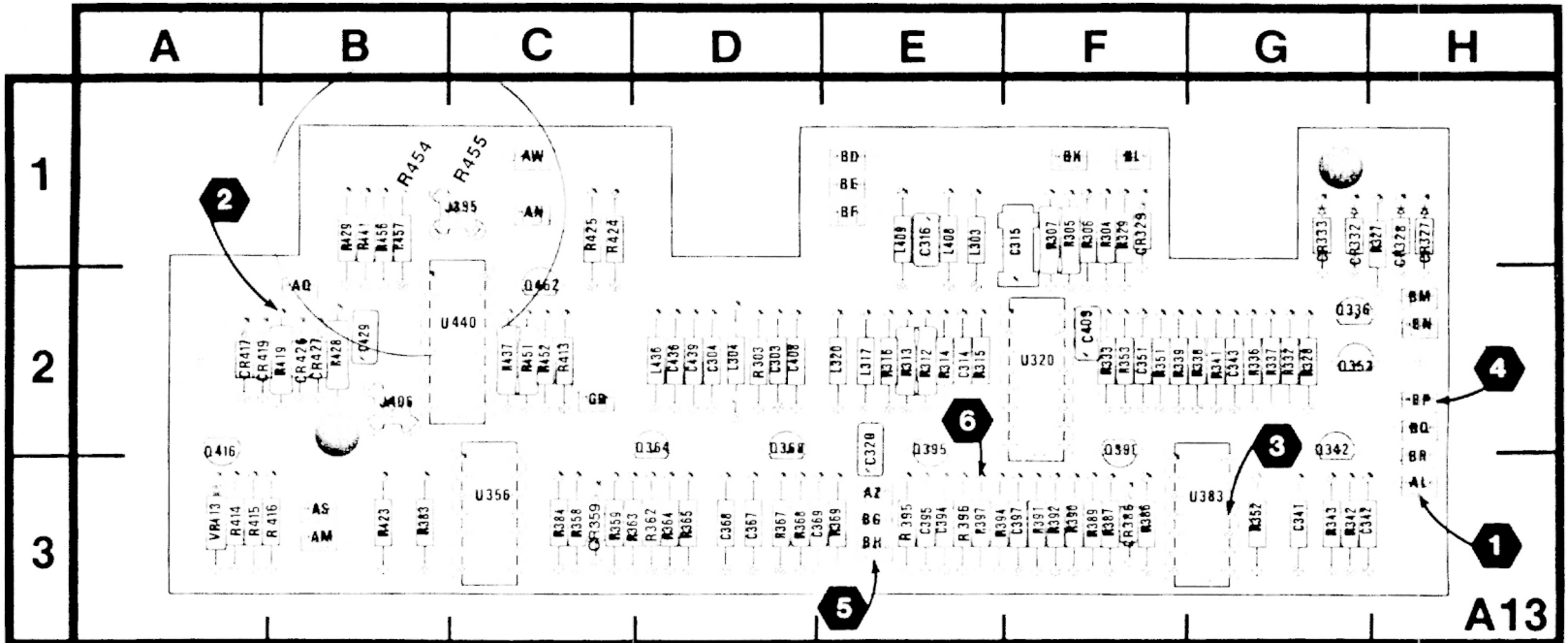


Figure 8-6. A13—Logic Board assembly.

http://manoman.sqhill.com

DESCRIPTION

DIAGRAM 4 LOGIC - Partial

ADD: R454 and R455

CHANGE: Value of R452

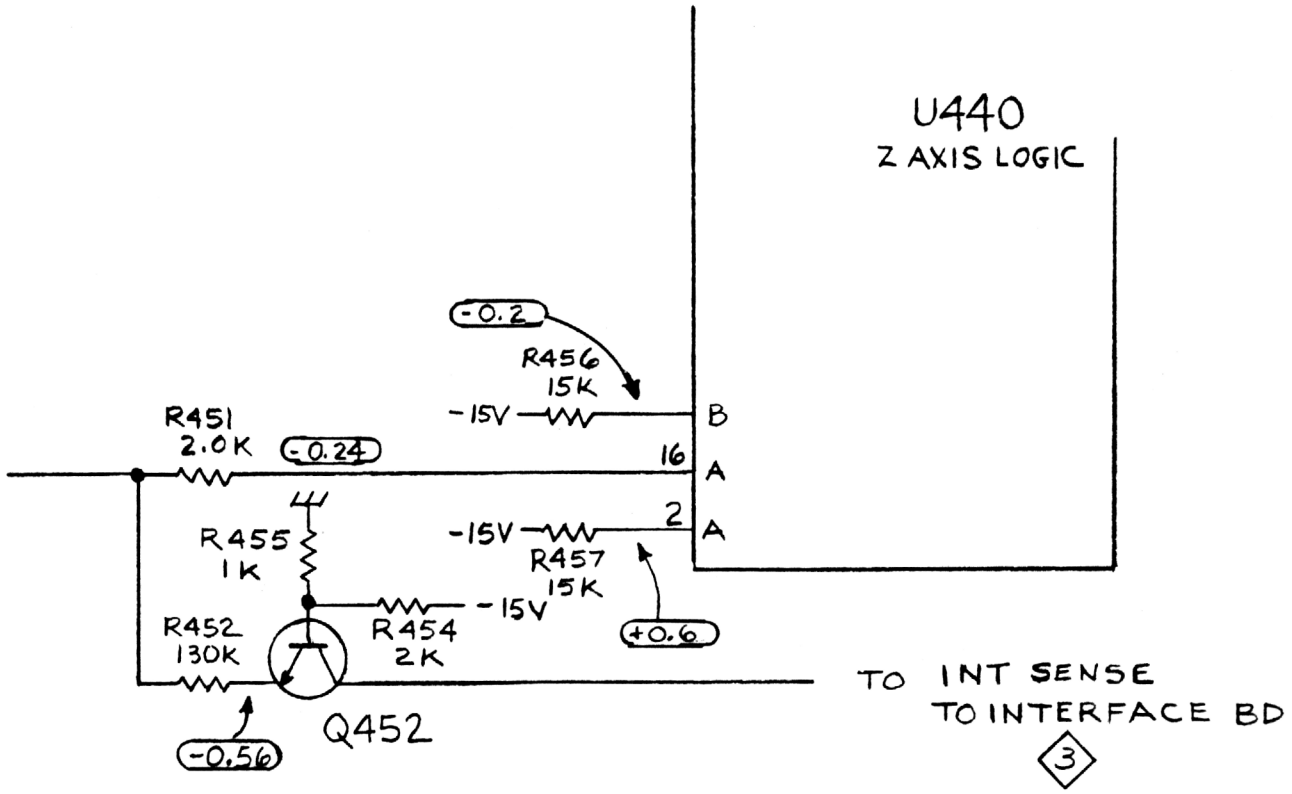


MCP INTENSITY TRACKING



http://manoman.sqhill.com

TEKTRONIX®

# R7103
# MOD WP

## MODIFICATION INSERT

This insert is provided as a supplement to the instruction manual furnished with this modified instrument. The information given in this insert supersedes that given in the manual.

This insert material Copyright © 1985 by Tektronix, Inc., Beaverton, Oregon. Printed in the United States of America. All rights reserved. Contents of this insert may not be reproduced in any form without permission of the copyright owner.

Tektronix, Inc ● P. O. Box 500 ● Beaverton, Oregon 97077 Phone 627-7111 ● Cables: Tektronix

071285

061-3146-00

http://manoman.sqhill.com

# DESCRIPTION

This manual insert describes MOD WP as it applies to the Tektronix Type R7103 Oscilloscope. MOD WP provides strengthened mounting of the CRT bezel, with camera-adapter retainer bars; locking type AC receptacle and mating power cord (Mod BG); and has a 100 KHz - 1 GHz Rossi input to the Horizontal Amplifier via a rear-panel BNC Connector.

# CHARACTERISTICS

## CAMERA MOUNT STRENGTHENING

The instrument is modified to accommodate longer and heavier camera assemblies as follows:

**CRT BEZEL**. Attachment of the crt bezel is changed from external screws to internally captivated studs, with double nuts for fastening.

**CAMERA SECURING**. The four studs are extended through the crt mesh filter and equipped with cross-bars and nuts to provide added securing for C-50 Series camera options.

**CRT MASK**. The furnished accessory plastic crt mask is punched to allow installation over the studs when the mesh filter is not used.

## CAMERA COMPATIBLITY

The extended studs and cross-bars are intended primarily for securing of Tektronix Type C-50 Series camera adapters. To use former Type C-12 or C-13 or various other camera types, the studs must be cut off short (grinding wheel suggested).

## AC POWER CONNECTOR

The AC power connector has been replaced with a captivating type AC power connector (Pacific Electricord Sure-lock™ #B-0778-000-00 or equivalent). The furnished power cord has been changed to mating Sure-lock™ #7120-25M-BL or equivalent, with a NEMA 120V parallel-blade, round ground plug at the Input end.

## Rossi Input

**Input Impedance**. Input impedance of the ROSSI input is 50Ω ±5% at 1 MHz (33Ω ±10% at dc).

**Sensitivity**.Nominal sensitivity for ROSSI input is 50 mV/div, measured using 100 mV p-p sinewaves at 100 MHz.

**Bandwidth**. Sensitivity is −3dB at 100 KHz or below and at 500 MHz or above from a reference amplitude of 2 div at 100 MHz with input usable to 1 GHz or greater.

**Maximum Input**. Maximum recommended input is 2 div from 100 KHz to 500 MHz, derated to 1 div at 1.2 GHz and 0.5 div at 2.0 GHz.

**Rated Input**. Rated non-destructive input is 1 V (dc + peak ac).

**DC Input**. Sensitivity to dc input is approximately 100 mV/div. To prevent undesireable imbalances in the Horizontal Amplifier, the dc component of any input should be kept below 2 or 3 divisions.

# ADJUST AND PERFORMANCE CHECK

Refer to Section 5 Page 55 of the Type R7103 Service Manual, E Horizontal System.

1. Perform all the checks and adjustments starting with step E1.

Note

*The Test point and adjustment locations E diagram referred to in the procedure has been replaced by a new diagram included in this manual addendum.*

2. Disconnect the following cables from the Horizontal Amplifier E.C. board.

a. Unplug white-brown coax cable from J942.

b. Unplug white-red coax cable from J943.

3. Temporarily re-locate the two coax cables from J970 and J971 to J942 and J943.

a. Plug the blue-brown cable into J943.

b. Plug the blue-black cable into J942.

4. Repeat the entire checks and adjustments procedure starting with step E1, except as follows:



http://manoman.sqhill.com

**E1**

g. ADJUST—the A CTR adjustment, R965, to align the trace with the center graticule line.

**E2**

gg. ADJUST—A LF ADJ adjustment, R945, for exactly eight divisions at the trailing edges of the displayed pulse (trailing edge of pulse is upper portion of pulse on left and right sides of waveform).

hh. Set the time-base Time/Div to 1 millisecond.

ii. ADJUST—Comp #1 adjustment, R958, for eight divisions of pulse amplitude 0.2 millisecond from the front corner of the pulse.

jj. Set the time-base Time/Div to 0.2 millisecond. Set the signal standardizer Rep Rate to 1 kHz.

kk. ADJUST—Comp #2 adjustment, R955, for eight divisions of pulse amplitude 20 microseconds from the front corner of the pulse.

ll. Set the time-base Time/Div to 20 microseconds, and the signal standardizer Rep Rate to 10 kHz.

mm. ADJUST—Comp #3 adjustment, R952, for an eight-division pulse two microseconds from the front corner of the pulse.

nn. Set the time-base Time/Div to 2 microseconds, and the signal standardizer Rep Rate to 100 kHz.

oo. ADJUST—Comp #4 adjustment, R950, so that the pulse is eight divisions in amplitude 0.2 microsecond from its front corner.

7. Return the two coax cables re-located in step 4 to the original positions.

a. Plug blue-brown cable into J971.

b. Plug blue-black cable into J970.

8. Connect the two coax cables, disconnected in step 3, to J942 and J943.

a. Plug white-brown cable into J942.

b. Plug white-red cable into J943.

## ROSSI INPUT PERFORMANCE CHECK

1. CHECK—INPUT SENSITIVITY

a. Connect a coaxial cable from a low freq. generator (type SG503) to the Vert. Input connector.

b. Set vertical sensitivity for 50 mV/Div.

c. Adjust low freq. generator output amplitude for a 2 Div display at 100 MHz.

d. Move the coaxial cable from the Vert. Input Connector to the Rossi Input Connector, located on the rear, of the R7103.

e. Set the Intensity control fully counter-clockwise.

f. Install a type 7A29 amplifier in the Horizontal compartment of the R7103.

g. Rotate the Intensity control slowly clockwise until a faint display appears.

h. Check—for 2 Div $\pm$10% of Horizontal deflection.

i. Check—position control, of plug-in in Horizontal compartment, will position display.

2. CHECK—ROSSI INPUT BANDWIDTH

a. Adjust the Low Freq. generator (type SG503) output amplitude for a 2 Div. of Horizontal deflection at 100 MHz.

b. Set the Low Freq. generator frequency to 50 KHz.

c. Check—for $\geq$1 Div of Horizontal deflection.



http://manoman.sqhill.com

d. Disconnect the Low Freq. Generator (type SG503) rom the Rossi input connector, of the R7103.

e. Connect a coaxial cable from a High Freq. Generator type SG504) to the Rossi Input Connector, of the R7103.

f. Adjust High Freq. generator output amplitude for a 2 Div display at 100 MHz.

g. Set the High Freq. generator (type SG504) output frequency to 500 MHz.

h. Check—for ≥1.4 Div of Horizontal deflection.

Disconnect all test equipment, this completes the adjustment and performance check procedure.

# REPLACEABLE PARTS LIST
# HORIZONTAL AMPLIFIER (A19)
# (COMPLETE ASSEMBLY—P/N 672-0801-00)

## ELECTRICAL

**DELETE:**

| | | |
|---|---|---|
| A19W962 | 131-0566-00 | BUS. CONNECTOR DUMMY |
| A19W963 | 131-0566-00 | BUS. CONNECTOR DUMMY |
| A19W965 | 131-0566-00 | BUS. CONNECTOR DUMMY |
| A19W966 | 131-0566-00 | BUS. CONNECTOR DUMMY |

**CHANGE TO:**

| | | |
|---|---|---|
| A19R963 | 323-0127-00 | RES. FXD. FILM 205Ω 1% 0.5W |

**ADD:**

| | | |
|---|---|---|
| A19C944 | 281-0808-00 | CAP. FXD. CER. 7PF 20% 100V |
| A19C950 | 283-0597-00 | CAP. FXD. MICA 470PF 10% 300V |
| A19C952 | 285-0813-00 | CAP. FXD. PLSTC 1500PF 5% 100V |
| A19C955 | 285-0598-00 | CAP. FXD. PLSTC 0.01μF 5% 100V |
| A19C958 | 285-0808-00 | CAP. FXD. PLSTC 0.1μF 10% 50V |
| A19J942 | 131-1003-00 | CONN. RCPT. ELEC. |
| A19J943 | 131-1003-00 | CONN. RCPT. ELEC. |
| A19Q962 | 151-0192-00 | TRANSISTOR, SELECTED |
| A19Q964 | 151-0192-00 | TRANSISTOR, SELECTED |
| A19R941 | 317-0103-00 | RES. FXD. COMP 10K 5% 0.125W |
| A19R942 | 317-0303-00 | RES. FXD. COMP 30K 5% 0.125W |
| A19R943 | 321-0289-00 | RES. FXD. FILM 10K 1% 0.125W |
| A19R944 | 321-0335-00 | RES. FXD. FILM 30.1K 1% 0.125W |
| A19R945 | 311-1222-00 | RES. VAR. 100Ω 20% 0.5W |
| A19R946 | 315-0680-00 | RES. FXD. COMP. 68Ω 5% 0.250W |
| A19R948 | 321-0097-00 | RES. FXD. FILM 100Ω 1% 0.125W |
| A19R949 | 321-0251-00 | RES. FXD. FILM 4.02K 1% 0.125W |
| A19R950 | 311-1225-00 | RES. VAR. 1K 20% 0.5W |
| A19R952 | 311-1227-00 | RES. VAR. 5K 20% 0.5W |
| A19R955 | 311-1230-00 | RES. VAR. 20K 20% 0.5W |
| A19R958 | 311-1232-00 | RES. VAR. 50K 20% 0.5W |
| A19R959 | 321-0294-00 | RES. FXD. FILM 11.3K 1% 0.125W |
| A19R962 | 321-0102-00 | RES. FXD. FILM 113Ω 1% 0.125W |
| A19R964 | 321-0267-00 | RES. FXD. FILM 5.9K 1% 0.125W |
| A19R965 | 311-1224-00 | RES. VAR. 500Ω 20% 0.5W |
| A19R966 | 321-0252-00 | RES. FXD. FILM 4.12K 1% 0.125W |
| A19R967 | 321-0102-00 | RES. FXD. FILM 113Ω 1% 0.125W |
| A19U944 | 156-1149-00 | MICR CIRCUIT, L1 OP. AMP., JFET INPUT |



http://manoman.sqhill.com

# CHASSIS

## ELECTRICAL

**ADD:**

| | | |
|---|---|---|
| J99 | 131-1315-00 | CONNECTOR, BNC FEMALE, PELTOLA |
| L901 | 037-2079-00 | INDUCTOR, COAXIAL DELAY LINE (W/WHT.-BRN CABLE) |
| L902 | 037-2080-00 | INDUCTOR, BALUN (W/WHT.-RED CABLE) |
| U901 | 307-0378-00 | HYBRID, THICK-FILM, POWER DIVIDER |

## MECHANICAL

**ADD:**

| | | |
|---|---|---|
| PLATE,COVER,ALUM. | 1 ea | 030-1120-02 |

**CHANGE TO:**

| | | |
|---|---|---|
| PLATE,FAN MOTOR | 1 ea | 030-1046-03 |
| SCREW,MACHINE,8-32 X 1.75,FLH,100°,STL | 4 | 212-0135-00 |
| FILTER,MESH | 1 | 378-0603-01 |
| CORD,POWER | 1 | 161-0200-00 |
| HEAT SINK | 1 | 214-2932-01 |

**ADD:**

| | | |
|---|---|---|
| RETAINER,CAMERA ADAPTER | 2 | 030-0727-01 |
| ADAPTER | 1 | 103-0249-00 |
| NUT,PLAIN,CAP,8-32 X 0.312,HEX.,BRS | 4 | 210-0402-00 |
| WASHER,FLAT,0.17 X 0.032 THK,STL | 4 | 210-0804-00 |
| NUT,PLAIN,HEX.,8-32 X 0.25 | 8 | 220-0555-00 |
| BRACKET,COIL MTG. | 1 ea | 030-1045-03 |
| CABLE,RIBBON,4-COND. 7.5" LG. | 1 ea | 034-3238-00 |
| CABLE,RIBBON, 5-COND. 3" LG. | 1 ea | 034-3238-01 |
| CABLE,COAX,WHITE PELTOLA TO PELTOLA 5" LG. | 1 ea | 034-3238-02 |
| WASHER,INT. LOCK,#2 | 2 ea | 210-0001-00 |
| NUT,HEX 2-56 X 0.188 | 2 ea | 210-0405-00 |
| SCREW,P.H. 4-40 X 0.188 | 4 ea | 211-0007-00 |
| SCREW,P.H. 4-40 X 0.250 | 2 ea | 211-0008-00 |
| SCREW,F.H. 82°,2-56 X 0.188 | 2 ea | 211-0087-01 |

# ACCESSORIES

**ADD:**

| | | |
|---|---|---|
| 030-1077-02 | 1 | FRAME,MASK |
| 061-3146-00 | 1 | INSERT,MANUAL—R7103 MOD WP |



http://manoman.sqhill.com

Test Point and
Adjustment Locations E

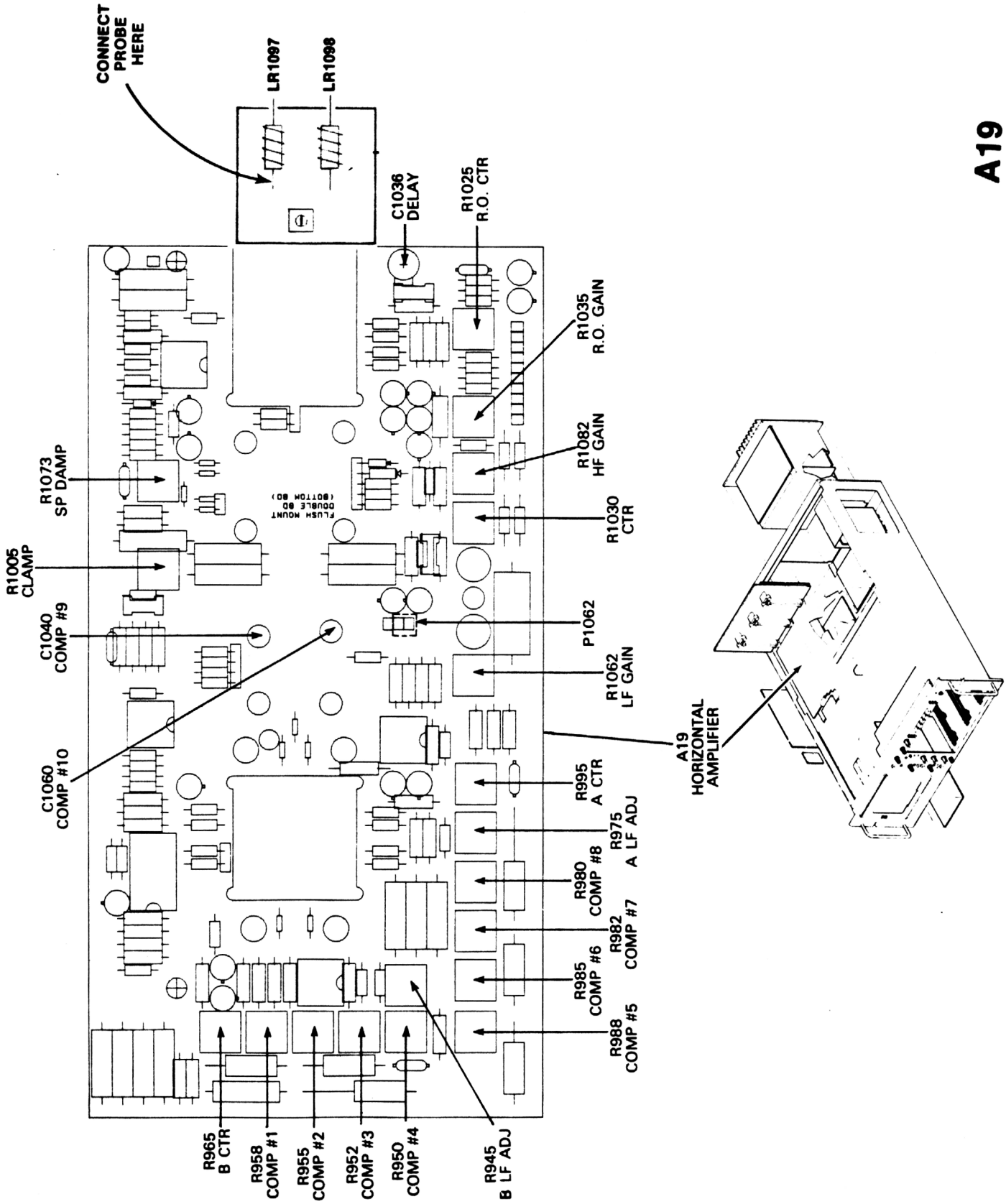




http://manoman.sqhill.com

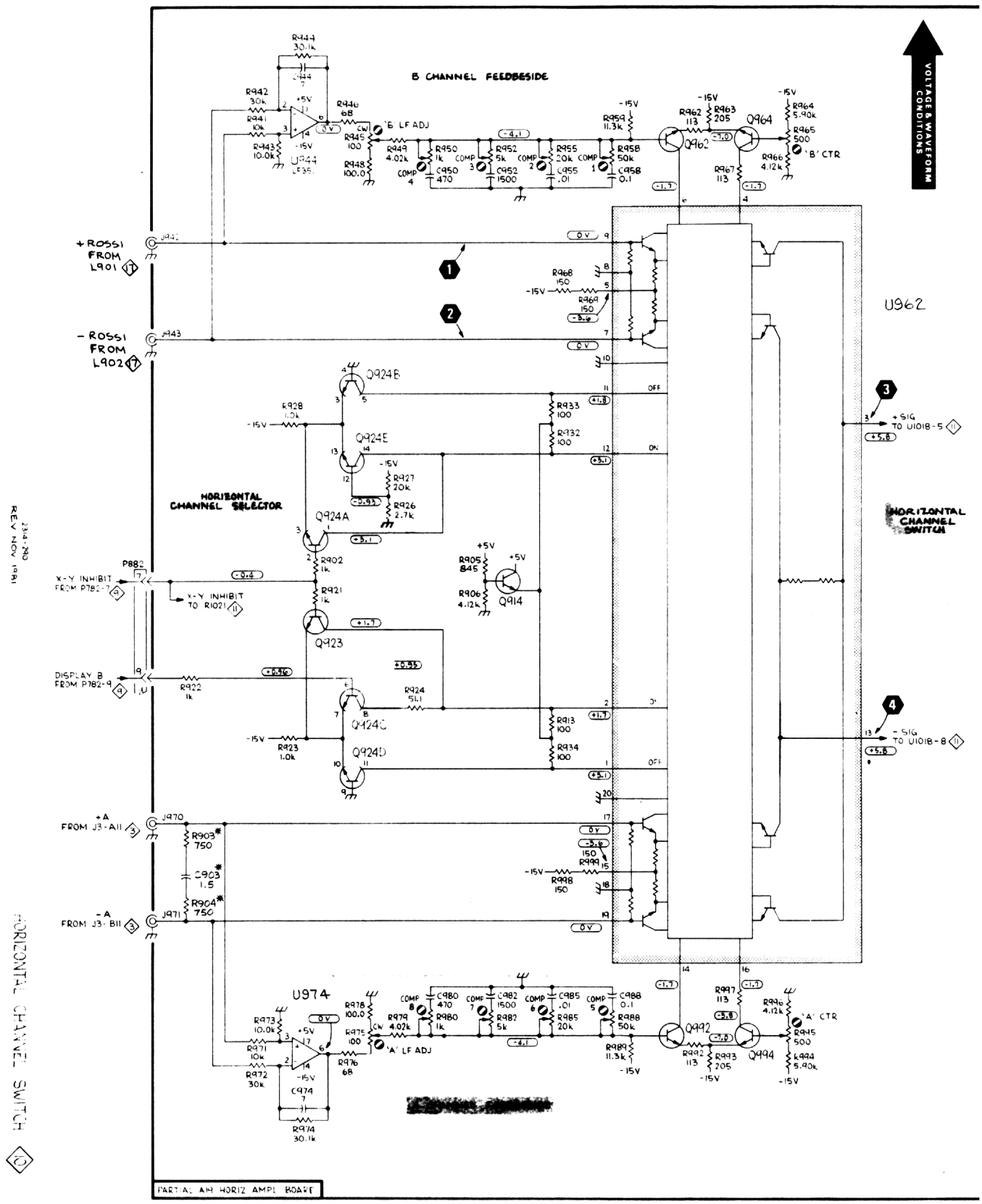


* SELECTABLE, FOR OPTION 2 ONLY
NOMINALLY THESE PARTS ARE NOT USED.



http://manoman.sqhill.com

http://manoman.sqhill.com

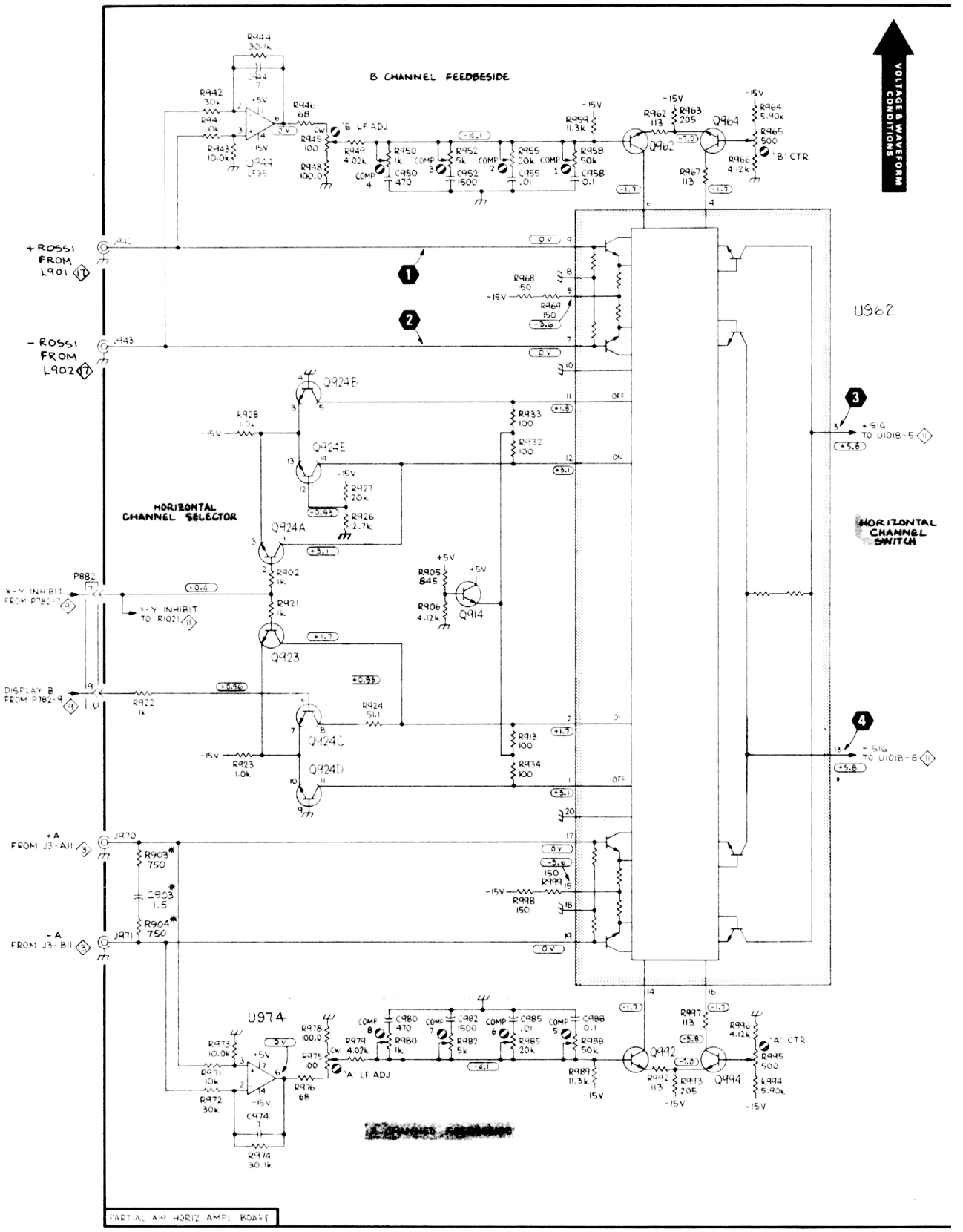

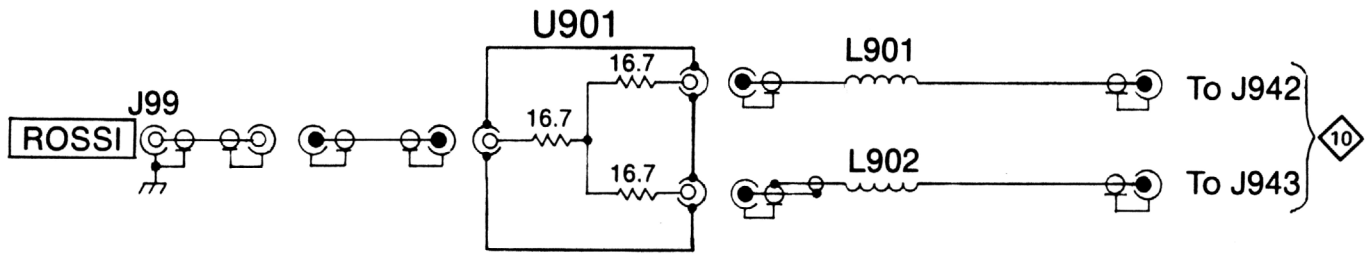




http://manoman.sqhill.com