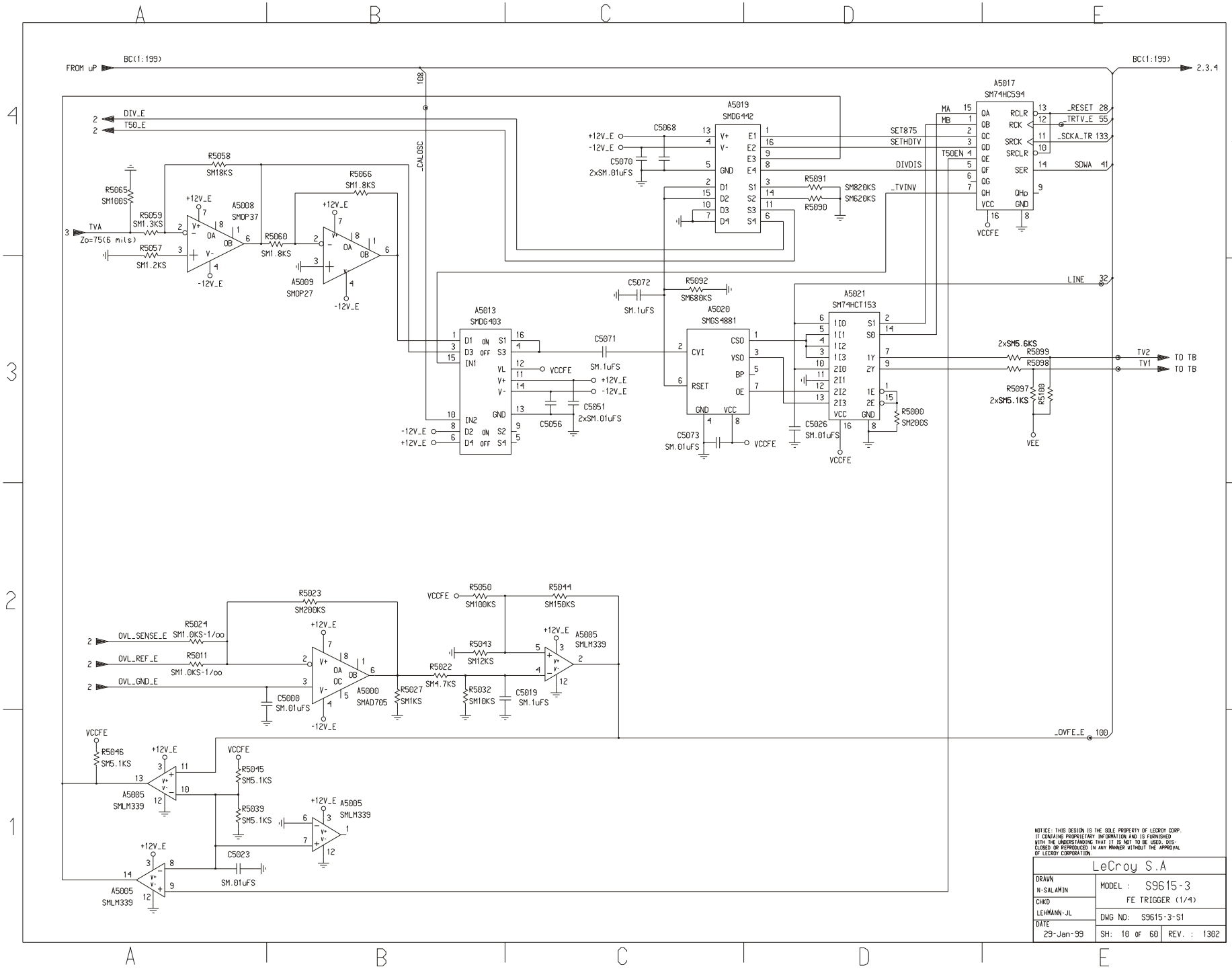
FROM uP
BC(1:199)
2,3,4
DIV_E
T50_E
TVA
Zo=75(6 mils)
R5065
SM100S
R5059
SM1.3KS
R5057
SM1.2KS
R5058
SM18KS
A5008
SMOP37
R5060
SM1.8KS
R5066
SM1.8KS
A5009
SMOP27
_CALOSC
A5019
SMDG442
C5068
C5070
2xSM.01uFS
R5091
SM820KS
R5090
SM620KS
A5017
SM74HC594
SET875
SETHDTV
DIVDIS
_TVINV
_RESET
_TRTV_E
_SCKA_TR
SDWA
LINE
C5072
SM.1uFS
R5092
SM680KS
A5013
SMDG403
C5071
SM.1uFS
C5056
C5051
2xSM.01uFS
A5020
SMGS4881
C5073
SM.01uFS
A5021
SM74HCT153
C5026
SM.01uFS
R5000
SM200S
2xSM5.6KS
R5099
R5098
R5097
2xSM5.1KS
R5100
TV2
TV1
TO TB
VEE
VCCFE
R5023
SM200KS
R5024
SM1.0KS-1/oo
R5011
SM1.0KS-1/oo
OVL_SENSE_E
OVL_REF_E
OVL_GND_E
C5000
SM.01uFS
A5000
SMAD705
R5027
SM1KS
R5022
SM4.7KS
R5032
SM10KS
C5019
SM.1uFS
R5050
SM100KS
R5044
SM150KS
R5043
SM12KS
A5005
SMLM339
_OVFE_E
R5046
SM5.1KS
R5045
SM5.1KS
R5039
SM5.1KS
C5023
SM.01uFS
NOTICE: THIS DESIGN IS THE SOLE PROPERTY OF LECROY CORP. IT CONTAINS PROPRIETARY INFORMATION AND IS FURNISHED WITH THE UNDERSTANDING THAT IT IS NOT TO BE USED, DISCLOSED OR REPRODUCED IN ANY MANNER WITHOUT THE APPROVAL OF LECROY CORPORATION.
LeCroy S.A
DRAWN
N-SALAMIN
CHKD
LEHMANN-JL
DATE
29-Jan-99
MODEL : S9615-3
FE TRIGGER (1/4)
DWG NO: S9615-3-S1
SH: 10 OF 60
REV. : 1302