HEWLETT
PACKARD

MODEL 5212A/5512A

ELECTRONIC COUNTER

HP PART NUMBER 05212-9009

ALL SERIAL

MICROFICHE NO. 05212-9010

OPERATING AND SERVICE MANUAL

HP Part No. 05212-9009

MODEL 5212A/5512A ELECTRONIC COUNTER

All Serials

This manual applies directly to HP Model 5212A/5512A Electronic Counters having serial number prefix 648. This manual with changes provided in Appendix I also applies to models having prefix numbers 632, 608, 519, 450, 426, 422, 306, 247, 244, 219, 207, 206, 152, 144, 131, and 123. (See Paragraph 1-4). This manual with changes provided in Appendix II applies to Option 02 and Option 03 instruments.

01395-5

Printed: JUNE 1967

TABLE OF CONTENTS

LIST OF TABLES

LIST OF ILLUSTRATIONS

APPENDIX

Figure 1-1. Model 5212A/5512A Electronic Counter

SECTION I
GENERAL INFORMATION

1-1. INTRODUCTION.

1-2. DESCRIPTION.

1-3. The ⓗⓟ Model 5212A/5512A Electronic Counter measures frequencies from 2 cps to 300 kc, period average up to 10^5 periods, and the ratio of two frequencies. The Model 5212A and the Model 5512A are similar: the Model 5212A displays measurements on a five-place neon column readout and the Model 5512A displays measurements on a five-place in-line Nixie® readout. The counter provides a four-line binary-coded-decimal output (1-2-2-4 code, 1-2-4-8 code optional at extra cost) for direct connection to the ⓗⓟ Model 562A Digital Recorder, the ⓗⓟ Model 580A/581A Digital to Analog Converter, or other data processing equipment.

1-4. IDENTIFICATION.

1-5. Hewlett-Packard uses a two-section, eight-digit serial number (on instrument rear panel) to identify instruments (000-00000). The first three digits are a serial prefix number, and the last five digits refer to a specific instrument. If the serial prefix on your instrument does not appear on the title page of this manual, there are differences between the manual and your instrument which are described in the appendix (serial prefix 450 and below) or in a change sheet included with the manual. If the change sheet is missing, the information can be supplied by your nearest Hewlett-Packard field office.

1-6. APPLICATIONS.

1-7. The Model 5212A/5512A can measure speed, rpm, acceleration, vibration, and other phenomena when they are converted to ac or pulses. It can simplify the production, test, adjustment, and calibration of low-frequency oscillators or pulse generators.

1-8. TERMINOLOGY.

1-9. The definitions of the following terms apply to those terms as they will be used throughout this manual.

a. BINARY. A bistable multivibrator (flip-flop) used to count or store binary information. The output of each binary is a "bit" or binary digit.

b. DECIMAL WEIGHT. Numerical value assigned to the output of each binary. In a 1-2-2-4 code, decimal weights are assigned as follows: A binary, 1; B binary, 2; C binary, 2; D binary, 4.

c. "1" STATE. One transistor in binary conducting, output of binary indicates decimal weight present.

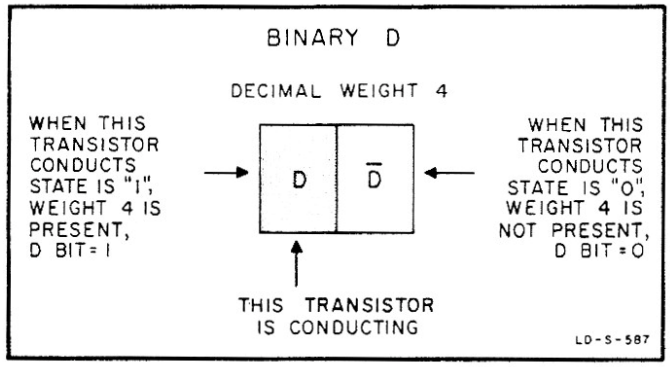

Figure 1-2. Binary Symbol

d. "0" STATE. Opposite transistor in binary conducting, output of binary indicates decimal weight absent.

e. 4-LINE BCD. Four-line binary-coded-decimal; decimal information coded in such a way that each decimal digit may be represented by a unique combination of 1 and 0 states of four binaries.

f. TRUTH TABLE. A table which lists the allowable 1 or 0 states of a system of binaries for each decimal digit to be represented. These states are listed in an order which presents the most significant digit first. Example: in a 1-2-2-4 code, binaries D, C, B, and A are assigned decimal weights of 4, 2, 2, and 1 respectively. The decimal numeral 5 is represented by state 0111 and weights of 2, 2, and 1 are present. The allowable combination (0111) is listed in the truth table (Table 1-2).

Table 1-1. Four-Line Code Truth Table

Digit	4-Line Code, 1-2-2-4 "1" State Positive			
	D = 4	C = 2	B = 2	A = 1
0	0	0	0	0
1	0	0	0	1
2	0	0	1	0
3	0	0	1	1
4	0	1	1	0
5	0	1	1	1
6	1	1	0	0
7	1	1	0	1
8	1	1	1	0
9	1	1	1	1

® Registered trademark of Burroughs Corporation.

Table 1-2. Specifications

MAXIMUM COUNTING RATE:
300 kc

REGISTRATION:
Number of Digits: 5

Model 5212A: neon column with display storage
Model 5512A: long-life Nixie with display storage

INPUT SENSITIVITY:
0.1 v rms sine wave*

INPUT IMPEDANCE:
Approximately 1 megohm shunted by 50 pf

OVERLOAD:
Input voltage at maximum sensitivity should not exceed 5 v rms for accurate operation or 50 v rms before damage. At minimum sensitivity voltage must not exceed 500 v peak.

OPERATING TEMPERATURE RANGE:
-20 to +65°C

TIME BASE FREQUENCY:
100 kc

TIME BASE STABILITY:
Aging Rate: < 2 parts in 10^6/week

As a Function of Temperature:
< ± 20 parts in 10^6 (+15°C to +65°C)
< ± 100 parts in 10^6 (-20°C to +65°C)

As a Function of Line Voltage (± 10%)
< 1 part in 10^6

TIME BASE EXTERNAL INPUT:
Sensitivity: 1 v rms into 1000 ohms

Range: 100 cps to 300 kc, sine wave

TIME BASE OUTPUT:
100 kc; > 1 v peak-to-peak @ 1000 ohms

*Internal control allows option of negative or positive pulse.

FREQUENCY MEASUREMENT:
Range: 2 cps to 300 kc

Accuracy: ± 1 count, ± time base accuracy

Reads In: kc with positioned decimal point

Self-check: counts 10 kc

Gate Times: 10, 1, 0.1, 0.01 sec

PERIOD AND MULTIPLE PERIOD AVERAGE MEASUREMENT:

Range: 2 cps to 300 kc

Accuracy: ± 1 count ± time base accuracy $\pm \frac{\text{trigger error**}}{\text{periods averaged}}$

Reads In: milliseconds or microseconds with positioned decimal point

Periods Averaged: 1, 10, 10^2, 10^3, 10^4, 10^5

Self-Check: Measures period of 100 kc

RATIO AND MULTIPLE RATIO:

Range: f_1: 100 cps to 300 kc, 1 v. rms into 1000 ohms

f_2: 2 cps to 300 kc(same as period)

Reads: (f_1/f_2) x period multiplier

Accuracy: ± 1 count of f_1, $\pm \frac{\text{trigger error** of } f_2}{\text{period multiplier}}$

BCD OUTPUT:

Impedance approximately 100K ohms

"1" State = -2 v

"0" State = -28 v

Reference Levels: Approx. -2.4 v, 350 ohm source impedance; and approx. -26.9 v, 1000 ohm source impedance

Print Command: Step from -29 v to -1 v, from 2700 ohms source in series with 1000 pf

Hold-Off Requirements: Chassis ground to +12 v maximum.

**Trigger error for 0.1 v rms sinewave input is 0.3% for signals with 40 db signal-to-noise ratio. Trigger error decreases with increased signal amplitude and slope.

Table 1-2. Specifications (cont'd)

DIMENSIONS:

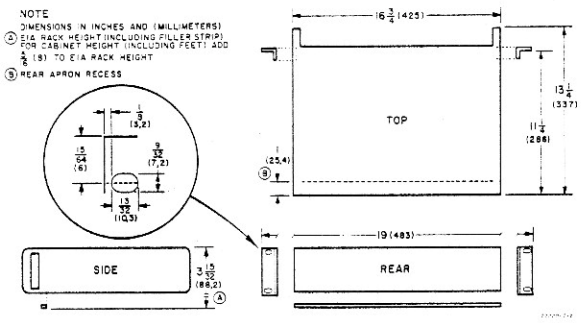

WEIGHT:
Net: 13 lbs (6, 0 kg)
Shipping: 24 lbs (10, 9 kg)

POWER REQUIREMENTS:
115 or 230 v ±10%, 50 to 60 cps, 35 watts

EQUIPMENT SUPPLIED:
10503A Cable, 4 ft long, BNC connectors; Rack Mount Kit with circuit board extender; detachable power cord

EQUIPMENT AVAILABLE:
Option 02: 1-2-4-8 BCD "1" state positive output in lieu of 1-2-2-4 BCD

Option 03: 1-2-4-8 BCD "1" state negative output in lieu of 1-2-2-4 BCD

1-10. OPTIONAL BCD OUTPUT.

1-11. The Model 5212A/5512A is available with 1-2-4-8 "1" state positive BCD output (Option 02), and 1-2-4-8 "1" state negative BCD output (Option 03). In Model 5212A/5512A Option 02 and 03 instruments, the standard decimal counter assemblies have been replaced by decimal counter assemblies having 1-2-4-8 BCD outputs. The 5212A/5512A, Option 02 and 03 are identical in all respects to the standard Model 5212A/5512A except for the BCD code. Table 1-3 is a truth table for the 1-2-4-8 BCD code; Figure IIA-1 and Table IIA-1 provide the schematic diagram and parts list for the 05212-6001 (Option 02) and 05212-6004 (Option 03) used in the 5212A. Figure IIA-2 and Table IIA-2 provide the schematic diagram and parts list for the 05512-6001 (Option 02) and 05512-6002 (Option 03) used in the 5512A.

Table 1-3. 1-2-4-8 Code Truth Table

Digit	4-Line Code, 1-2-4-8			
	D = 8	C = 4	B = 2	A = 1
0	0	0	0	0
1	0	0	0	1
2	0	0	1	0
3	0	0	1	1
4	0	1	0	0
5	0	1	0	1
6	0	1	1	0
7	0	1	1	1
8	1	0	0	0
9	1	0	0	1

SECTION II
INSTALLATION

2-1. INTRODUCTION.

2-2. This section contains information on unpacking, inspection, repacking, storage, and installation.

2-3. UNPACKING AND INSPECTION.

2-4. If the shipping carton is damaged, ask that the carrier's agent be present when the instrument is unpacked. Inspect the instrument for damage (scratches, dents, broken knobs, etc). If the instrument is damaged or fails to meet specifications (Performance Check, Para. 5-28), notify the carrier and the nearest Hewlett-Packard field office immediately (field offices are listed at the back of this manual). Retain the shipping carton and the padding material for the carrier's inspection. The field office will arrange for the repair or replacement of your instrument without waiting for the claim against the carrier to be settled.

2-5. STORAGE AND SHIPMENT.

2-6. PACKAGING. To protect valuable electronic equipment during storage or shipment always use the best packaging methods available. Your Hewlett-Packard engineering representative can provide packing material such as that used for original factory packaging. Contract packaging companies in many cities can provide dependable custom packaging on short notice. Here are a few recommended packaging methods:

a. ORIGINAL. Place instrument in original container. Replace all packing pads and fillers in the exact position which they originally occupied.

b. RUBBERIZED HAIR. Cover painted surfaces of instrument with protective wrapping paper. Pack instrument securely in strong corrugated container (350 lb/sq in. bursting test) with 2-inch rubberized hair pads placed along all surfaces of the instrument. Insert fillers between pads and container to ensure a snug fit.

c. EXCELSIOR. Cover painted surfaces of instrument with protective wrapping paper. Pack instrument in strong corrugated container (350 lb/sq in. bursting test) with a layer of excelsior about 6 inches thick packed firmly against all surfaces of the instrument.

2-7. ENVIRONMENT. Conditions during storage and shipment should normally be limited as follows:

a. Maximum altitude 20,000 feet.

b. Minimum temperature -40°F (-40°C).

c. Maximum temperature 167°F (75°C).

2-8. RACK INSTALLATION.

2-9. The Model 5212A/5512A is ready for bench operation as shipped from the factory. Additional parts necessary for rack mounting are packaged with the instrument. To convert for rack installation, refer to figure 2-1 and proceed as follows:

a. Remove tilt stand.

b. Remove feet (press the foot-release button, slide foot toward center of instrument, and lift off).

c. Remove adhesive-backed trim strips at front end of sides.

d. Attach flanges to front end of sides (larger corner-notch down).

e. Attach filler strip along bottom edge of front panel. Instrument is now ready to mount in standard rack.

CAUTION

Ambient temperature in rack during operation should not exceed a maximum of 140°F (60°C). Be sure instrument position in rack permits air circulation to intake in center area of rear panel and that nearby instruments do not discharge hot air near intake.

2-10. OPERATION FROM 115 OR 230 VOLTS.

2-11. The Model 5212A/5512A may be operated from either 115- or 230-volt (±10%) power lines. A slide switch on the rear panel permits quick conversion for operation from either voltage. Insert a narrow-blade screwdriver in the switch slot and slide the switch up for 115-volt operation ("115" marking exposed) or down for 230-volt operation ("230" marking exposed). The counter is supplied with fuse for 115-volt operation; be sure to replace this fuse for 230-volt operation; see table 2-1.

Note

Before connecting AC power to instrument be sure slide switch is properly positioned.

Table 2-1. 115/230 Volt Conversion

Conversion	115 volt	230 volt
Slide switch (S8)	Up ("115")	Down ("230")
AC LINE fuse (F1)	1.0 ampere fast-blow (hp 2110-0001)	.5 ampere fast-blow (hp 2110-0012)

2-12. REAR PANEL CONNECTIONS (figure 2-2).

2-13. POWER CABLE. The counter is equipped with a detachable 3-wire power cable. Proceed as follows for installation:

a. Connect flat plug (three-socket connector) to AC line jack at rear of instrument.

b. Connect plug (two-blade with round grounding pin) to three-wire (grounded) power outlet. Exposed portions of instrument are grounded through the round pin on the plug for safety; when only a two-blade outlet is available, use connector adapter (hp Stock No. 1251-0048), and connect short wire from side of adapter to ground.

2-14. STD CONNECTOR. The STD connector and switch, located on the instrument rear panel are used for operation with an external time base or for ratio measurements. Connect external time base, or higher of two frequencies whose ratio is to be measured, to the STD connector, and move switch to the EXT position.

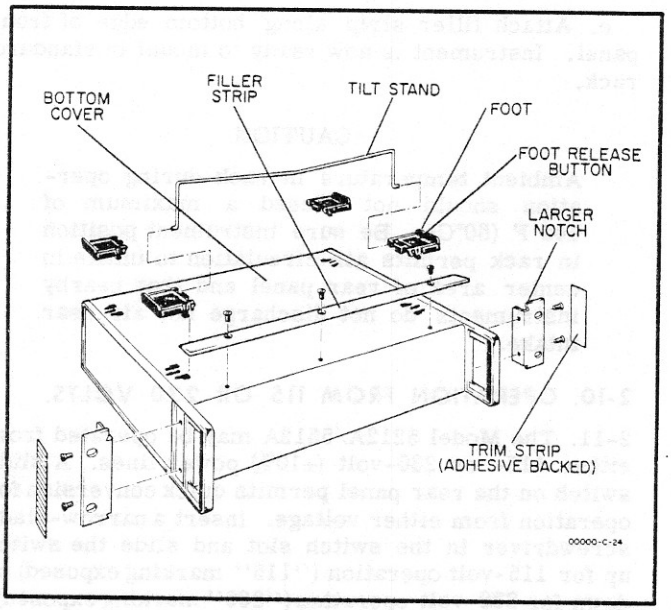

Figure 2-1. Conversion for Rack Mounting

2-15. DIGITAL RECORDER. The 50-pin DIGITAL RECORDER jack (J4) on the rear panel permits connection to be made to the Hewlett-Packard Model 562A Digital Recorder through the 50-conductor input cable supplied as an option with Model 562A. Signals for other data processing equipment can also be taken from this jack. Mating connector is Amphenol No. 57-30500. Signals available and external signals required are given in table 2-2.

Table 2-2. Summary of Connections to Digital Recorder Jack

Function		J4 Pin No.
Digit	Weight	
(right end)	1	1
10^0	2	2
	2	26
units	4	27
	1	3
10^1	2	4
	2	28
(tens)	4	29
	1	5
10^2	2	6
	2	30
(hundreds)	4	29
	1	7
10^3	2	8
	2	32
(thousands)	4	33
10^4	1	9
	2	10
(ten thousands)	2	34
	4	35
Inhibit signal input; about +12 volts supplied from external source to prevent reset; causes count to hold		22
Print command output; positive 28 volt pulse on -29 volt baseline signals that completed count is available for readout		23
Neg reference output; about -26 vdc indicates "0" level for bcd output		24
Pos reference output; about -2.4 vdc indicates "1" level for bcd output		25
Ground		50

2-16. COOLING.

2-17. The Model 5212A/5512A uses forced air cooling. The air intake and filter are located on the rear panel of the instrument. Inspect the filter regularly; clean the filter before it becomes dirty enough to restrict air flow (see para 5-3 for instructions on filter care).

Note: Do not apply coating compounds to non-metal filters.

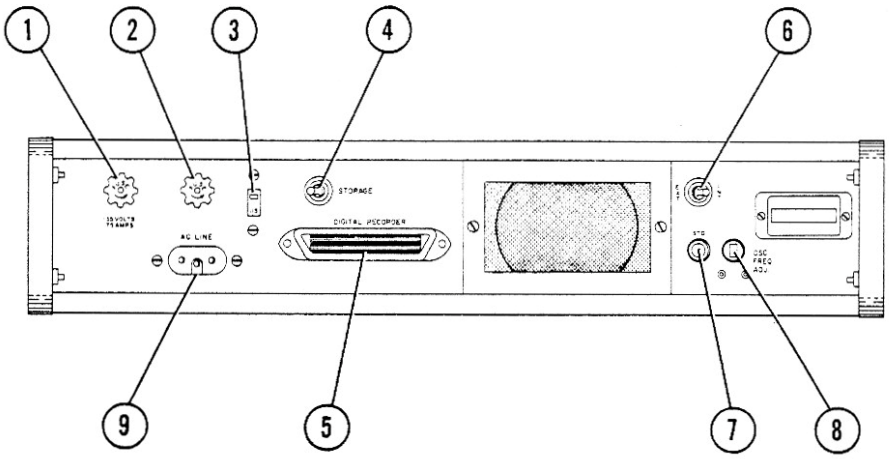

1. -35 Volts Supply Fuse: Provides overload protection; should be 0.75 amp fast blow fuse.

2. Line Fuse: Provides overload protection; should be 0.6 amp slow blow fuse for 115V operation, and 0.3 amp slow blow fuse for 230V operation.

3. Line Voltage Switch: Permits selection of either 115 or 230 vac line; slide up for 115V, down for 230V.

4. STORAGE switch provides display storage when in storage; or continuous display of internal count when out of storage.

5. DIGITAL RECORDER connector: Supplies BCD information to recorder, analog converter, or data processing equipment.

6. INTERNAL-EXTERNAL Switch:

   a. INTERNAL: Uses internal frequency standard; provides 100 kc at STD jack.

   b. EXTERNAL: Permits use of external input 100 cps to 300 kc or (F1) of ratio measurements.

7. STANDARD Jack: Signal input or output - when used with the INTERNAL-EXTERNAL switch.

8. OSCILLATOR Adjustment: For adjustment of oscillator frequency.

9. AC LINE connector: Connects to power cord.

Figure 2-2. Rear Panel Connections

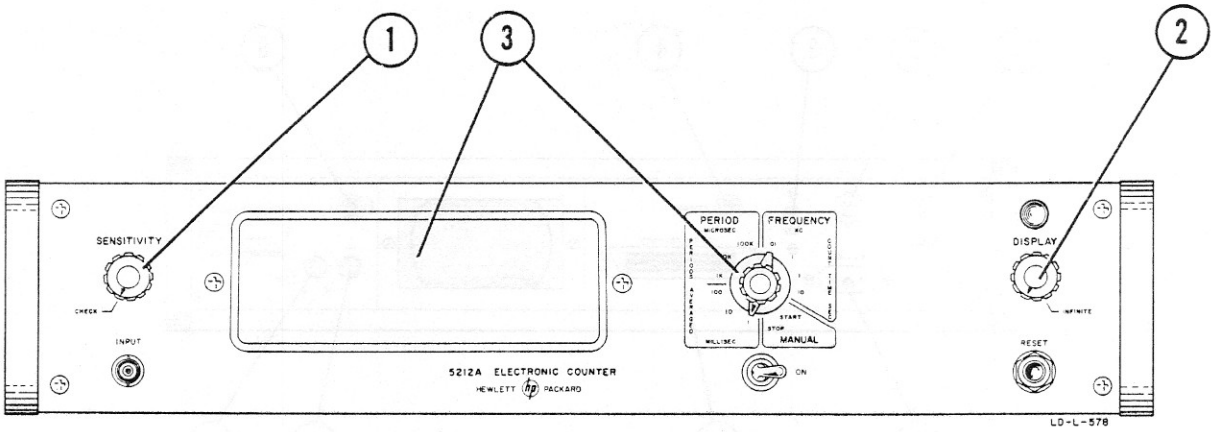

05212-A-4

1. Set SENSITIVITY to CHECK.
2. Set DISPLAY fully counterclockwise, for maximum sample rate.
3. Compare display with table below for each position of function selector.

Position	Display
1 period	000.01
10 periods	00.010
100 periods	0.0100
1K periods	010.00
10K periods	10.000
100K periods	0.0000
0.01 sec	0010.0
0.1 sec	010.00
1.0 sec	10.000
10 sec	0.0000
MANUAL START	Continuous 10-cps counting
MANUAL STOP	Continuous display of last count

Figure 3-1. Self Check

SECTION III
OPERATION

3-1. INTRODUCTION.

3-2. The Model 5212A/5512A measures frequency, period average, ratio of two frequencies, and total events. A function selector switch selects both measurement function and time base or multiplier. A DISPLAY control selects the sampling rate and a SENSITIVITY control adjusts instrument sensitivity. Figures 3-1 and 3-3 through 3-6 provide step-by-step operating procedures for each measurement function. The number or numbers associated with each control indicate the step in which that control is used.

3-3. CONTROLS.

3-4. FUNCTION SELECTOR. The function selector is a twelve position switch used to select both measurement function and the time base (gate time) or multiplier desired for the measurement. See figure 3-7 for an explanation of panel markings.

3-5. SENSITIVITY CONTROL. The SENSITIVITY control adjusts instrument sensitivity. With proper settings of the SENSITIVITY control the Model 5212A/5512A will operate with input signals between 0.1 v rms (sine wave) and 500 v peak.

> Note: Overload limits vary with settings of the SENSITIVITY control. Input voltage at maximum sensitivity should not exceed 5 v rms for accurate operation or 50 v rms before damage. At minimum sensitivity voltage must not exceed 500 v peak.

3-6. DISPLAY CONTROL. The DISPLAY control sets the period of time following a gate closure until the gate may be opened again. With the counter in the frequency mode, DISPLAY is adjustable from approximately 0.2 second as a minimum to at least 5 seconds as a maximum, and is independent of gate time. A control setting (INFINITE) is provided to hold the display indefinitely.

3-7. RESET PUSHBUTTON. The RESET pushbutton, when depressed, resets the display and internal count to zero. The counter, after reset, is ready to begin a new counting cycle.

3-8. EXTERNAL STD SWITCH. To use an external frequency standard (or the higher of two frequencies for ratio measurement), set the STD switch on the rear of the counter to EXT, and connect the external standard (higher frequency signal) to the BNC connector below the STD switch. When the STD switch is in the INT position, the 100 kc signal from the internal oscillator is available from the STD connector.

3-9. STORAGE SWITCH. The STORAGE switch on the rear panel provides a means of disabling the storage feature. The display storage feature provides a continuous visual display while the instrument is totalizing a new count. Only if the new count differs from the previous count will the display change.

3-10. INTERPRETING DISPLAY.

3-11. Direct readout is provided in both PERIOD and FREQUENCY functions with measurement units indicated by the function selector and with decimal point automatically positioned. In the MANUAL function the display is read directly; the decimal point is not lighted. In the ratio function two methods may be used to interpret the display; 1) divide the displayed reading by the period multiplier indicated by the function selector; disregard decimal point. 2) If the function selector indicates a multiplier of 1, 10, or 100, move the decimal point two places to the right and read measurement from the display; if the indicated multiplier is 1K, 10K, or 100K, move the decimal point one place to the left and read ratio measurement from the display. Note that the only difference between ratio and period measurements is the use of an external frequency instead of the internal 100 kc oscillator.

3-12. ACCURACY.

3-13. Frequency Measurements. The basic counter accuracy is determined by two factors. One factor is the stability of the 100 kc crystal standard in the time base, which is 2 parts per million or .0002 percent per week. A second factor is the inherent error of ±1 count present in all counters of this type. This error is due to phasing between the timing pulse that operates the electronic gate and the pulses that pass through the gate to the counters. The chart in figure 3-2 shows the errors to be expected for frequency or period measurements.

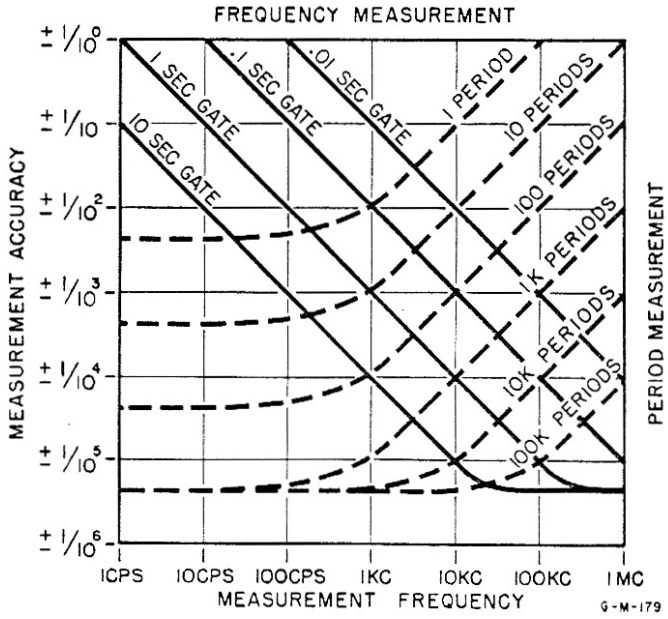

Figure 3-2. Measurement Accuracy

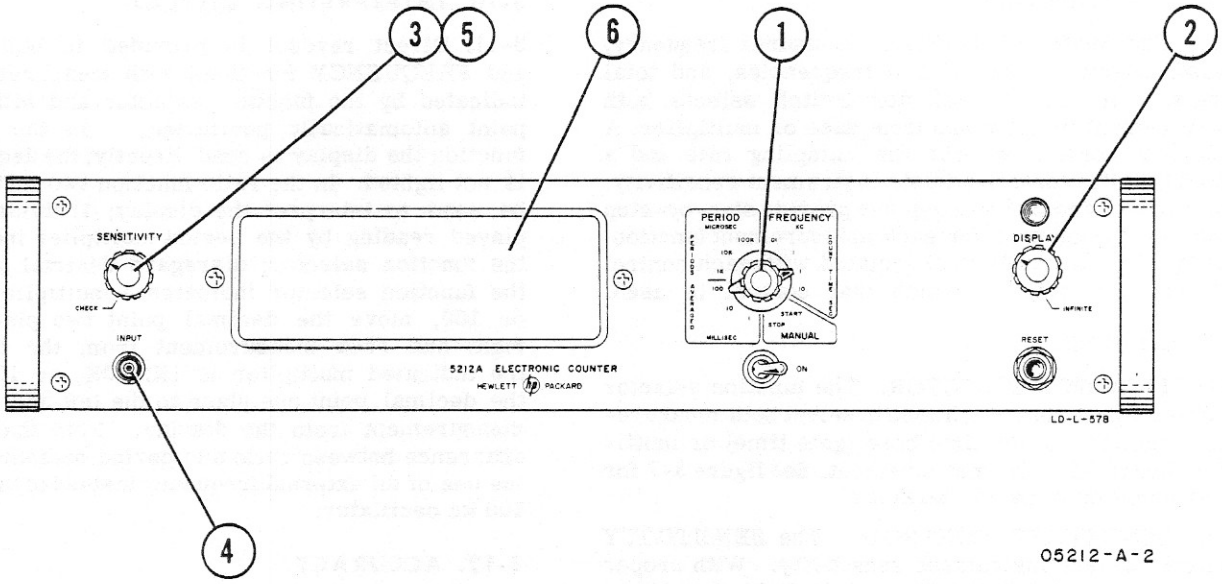

05212-A-2

1. Set function selector to desired gate time (COUNT TIME SEC).

2. Set DISPLAY for desired sample rate.

3. Set SENSITIVITY to minimum (counterclockwise not in CHECK).

4. Connect frequency to be measured to INPUT connector.

5. Adjust SENSITIVITY until consistent count is displayed. Set SENSITIVITY 30° clockwise from this point.

6. Read frequency in kc. Decimal point is positioned automatically.

Figure 3-3. Frequency Measurements

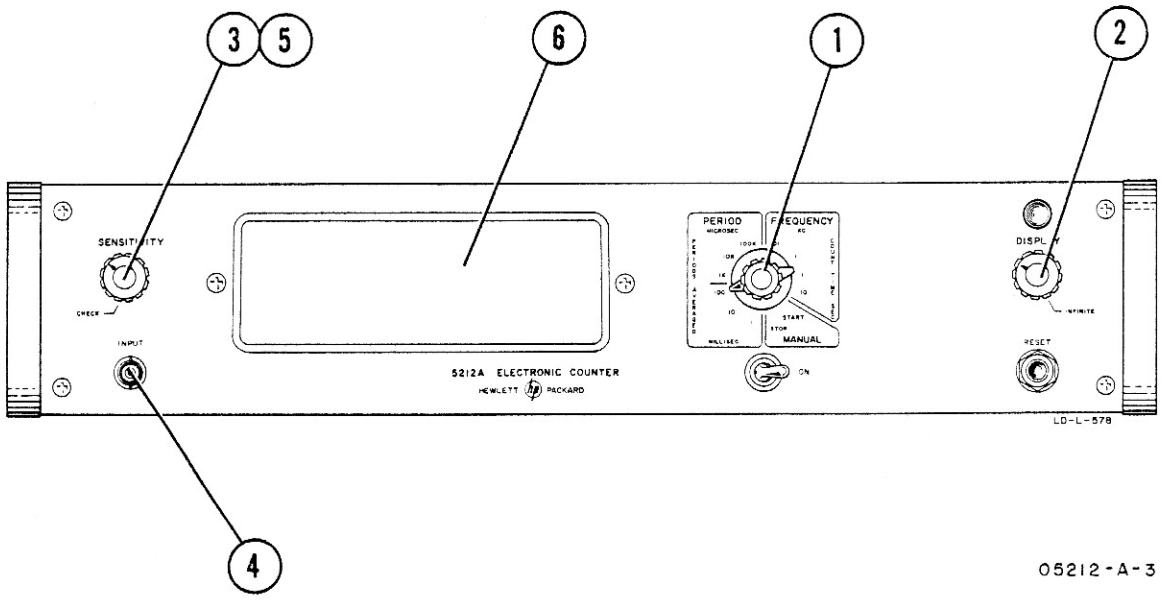

1. Set function selector for number of periods to be averaged.

2. Set DISPLAY for desired sample rate.

3. Set SENSITIVITY to minimum (counterclockwise, not in CHECK).

4. Connect signal to be measured to INPUT connector.

5. Adjust SENSITIVITY until consistent count is displayed. Set SENSITIVITY 30° clockwise from this point.

6. Read period in units indicated by function selector. Decimal point is positioned automatically.

Figure 3-4. Period Measurement

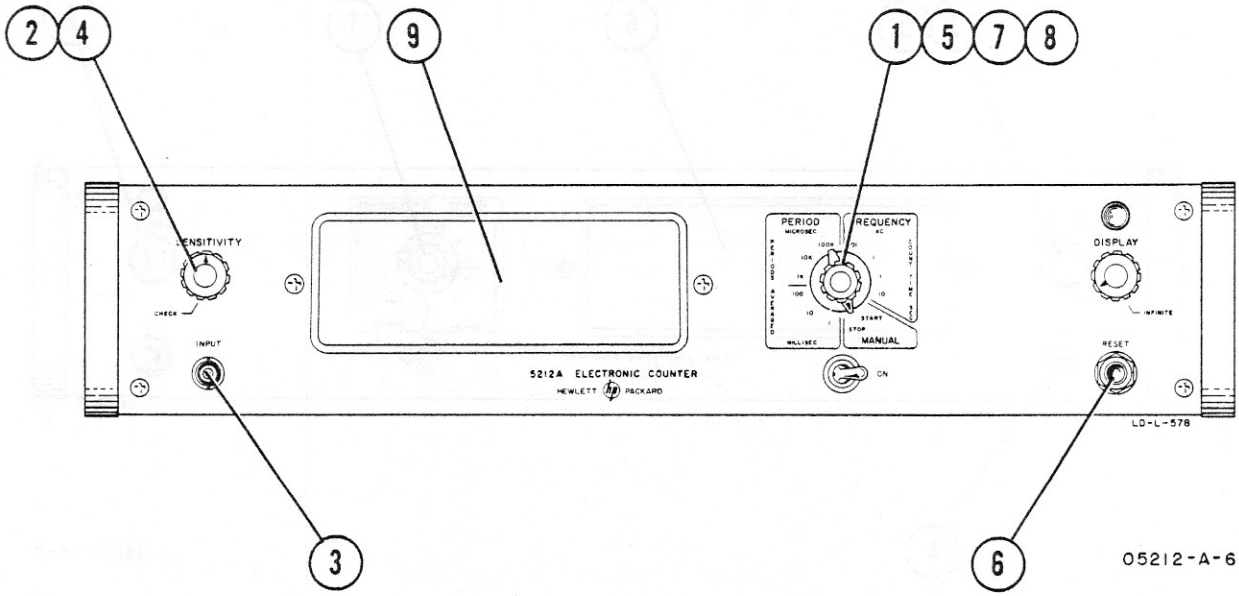

1. Set function selector to MANUAL START.

2. Set SENSITIVITY to minimum (counterclockwise, not in CHECK).

3. Connect signal to INPUT connector.

4. Adjust SENSITIVITY until count is displayed. Set SENSITIVITY 30° clockwise from this point.

5. Set function selector to MANUAL STOP.

6. Press RESET to set display to zero.

7. To start count, set function selector to MANUAL START.

8. To end count, set function selector to MANUAL STOP.

9. Read total count.

Figure 3-5. Totalizing Procedure

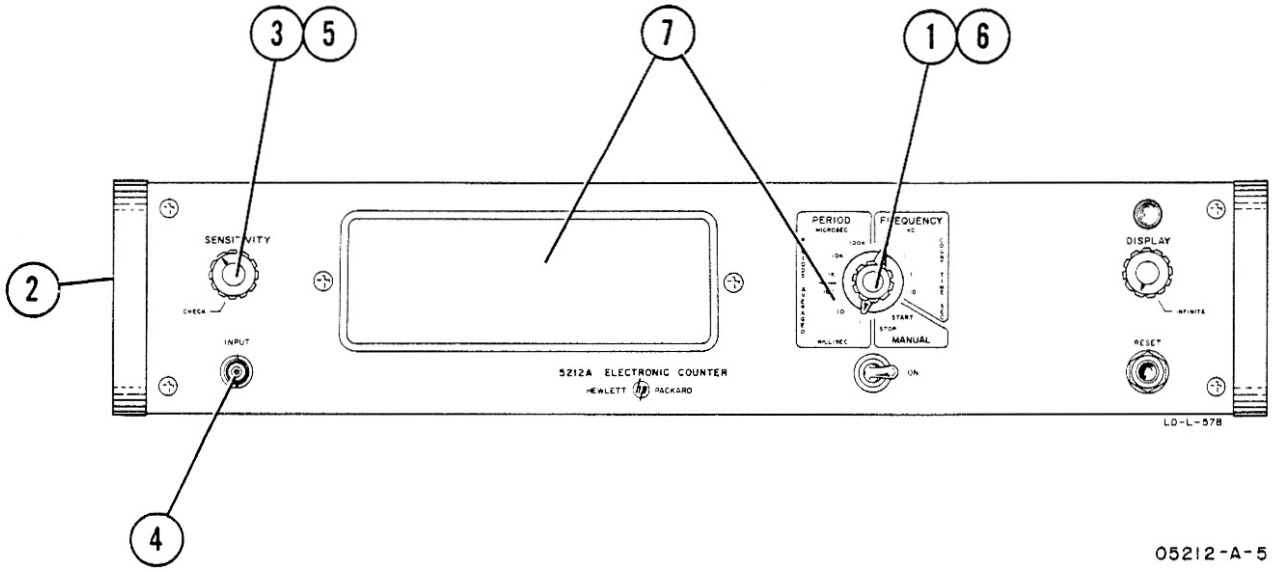

1. Set function selector to PERIODS AVERAGED, 1.

2. Connect higher frequency (F1) to STD connector on rear panel and set STD switch to EXT.

3. Set SENSITIVITY to minimum (counterclockwise, not in CHECK).

4. Connect lower frequency (F2) to INPUT connector.

5. Adjust SENSITIVITY for consistent display. Set SENSITIVITY 30° clockwise from this point.

6. Set function selector to PERIOD multiplier which gives desired resolution.

7. Divide display by PERIOD multiplier to obtain ratio F1/F2. Disregard decimal point (see paragraph 3-11).

Figure 3-6. Ratio Measurement

3-14. Period measurements. There are three factors contributing to the accuracy of period measurements:

a. The stability of the 100 kc standard which is ±.0002 per cent.

b. The ambiguity of the ±1 count.

c. ± trigger error (for one period, assuming Signal to noise ratio of 40 db, this trigger error is 0.3%). A general formula for finding the percentage error to be expected under various conditions is as follows:

$$A = 100 \left(\pm \frac{f_2}{nf_1} \pm \frac{e}{n} \pm E\right)$$

A = accuracy in %

f_1 = time base frequency counted (cps)

f_2 = frequency whose period is being measured (cps)

n = number of periods averaged

e = 3×10^{-3} (trigger error for one period, 40 db (S/N)

E = time base accuracy (weekly maximum drift rate) E depends on the drift rate of the individual time base, absolute value of off-set at standardization and the time since standardization. A plot of this formula for the 5212A/5512A is shown in Figure 3-2.

3-15. PULSE OPERATION.

3-16. To measure either positive or negative pulses with the 5212A/5512A the input Schmitt trigger must be readjusted for pulse operation. Optimum adjustment for pulse operation will differ from optimum sine wave adjustment. Use this adjustment only for pulse operation. The input Schmitt trigger may be adjusted for either positive or negative pulse operation; use procedure given in Paragraph 5-24.

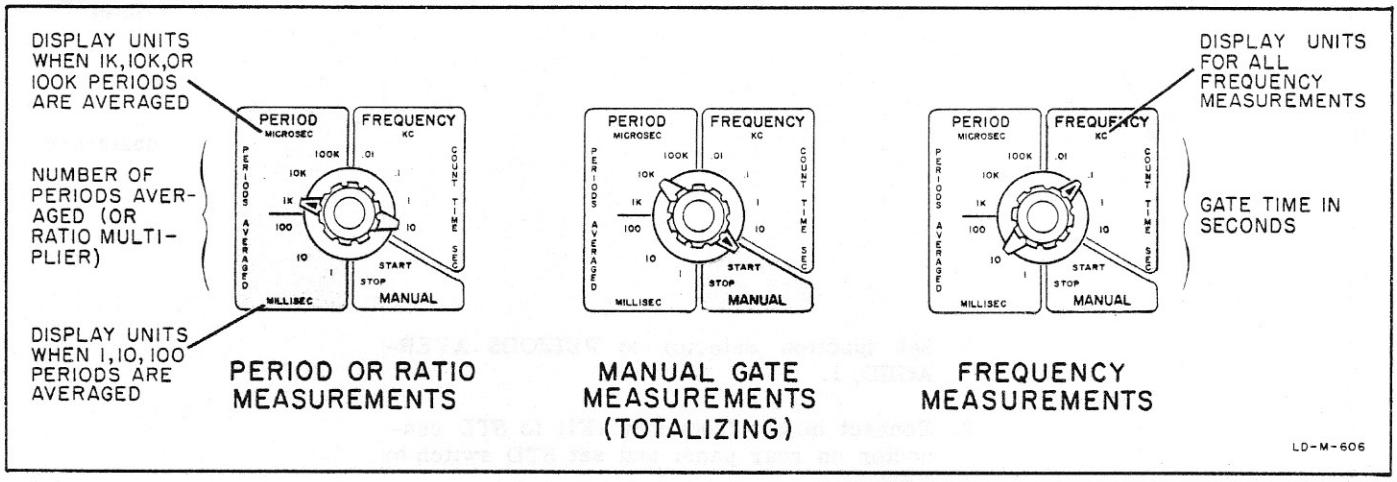

Figure 3-7. Panel Markings, Function Selector Switch

SECTION IV
PRINCIPLES OF OPERATION

4-1. INTRODUCTION.

4-2. This section describes how the Model 5212A/5512A operates. Basic circuits used in the counter are described first (paragraphs 4-3 through 4-24). Operation of decimal counters and decade dividers is thoroughly discussed in paragraphs 4-25 through 4-35. A discussion of basic counter functions is given next (paragraphs 4-36 through 4-42). Pulse timing circuits and overall operation of the entire counter are discussed in paragraphs 4-43 through 4-48. Circuit boards are identified by an assembly number, A1, A2, etc (see table 5-3). At the end of the section each assembly is described in order of its assembly designation (A_) (paragraphs 4-49 through 4-83).

4-3. THE DIODE.

4-4. GENERAL. Semiconductor diodes are used in signal-handling circuits and in power supply rectifier and regulator circuits.

4-5. THE "OR" GATE. Two or more diodes are sometimes used as an OR gate. The OR gate is a multiple-input circuit which requires only one input to produce an output. Figure 4-1A shows some OR gate configurations.

4-6. THE "AND" GATE. The AND gate or coincidence circuit is a multiple-input circuit which requires the presence of all input signals to produce an output. Figure 4-1B shows an AND gate configuration in which an input signal is passed only when a properly polarized control voltage is applied.

4-7. INHIBIT GATE. The signal normally passes through an INHIBIT gate; adding a second signal closes the gate and prevents the signal from going through. One of the most common forms of the INHIBIT gate is the shunt gate shown in figure 4-1C. The main gate (paragraph 4-37) is an INHIBIT gate. Normally the diode is biased off, the gate is closed, and pulses reach the decade counter assembly; when the gating signal biases the diode on, the pulses are shunted to ground and do not reach the counter assembly.

4-8. LIMITER OR CLIPPER. The limiter or clipper is a circuit which removes positive or negative peaks of waveforms. It can be used either as a waveform shaping circuit or as a protective device to prevent excessive voltages from reaching a sensitive circuit. Figure 4-1D shows a limiter which prevents the negative peak of a pulse from going more negative than about -0.6 volt. Note that for a conducting silicon diode the cathode voltage is about 0.6- to 0.9- volt more negative than the anode.

4-9. CLAMPER OR DC RESTORER. The clamper or dc restorer is a circuit which establishes either the positive or negative peak of a waveform at a particular dc reference voltage; in other words, it provides a definite baseline voltage for the waveform. Figure 4-1E shows a clamper which provides a baseline of about +20 volts for a negative pulse.

4-10. REGULATOR. A diode regulator uses either the constant reverse-bias breakdown voltage characteristic of a breakdown diode or the constant forward-bias voltage drop characteristic of a silicon diode. Power supply reference voltages are generally provided by breakdown diodes which maintain a constant voltage when supplied with a reverse-bias voltage greater than their specified breakdown voltage. Regulated voltages can also be provided by a forward-biased silicon diode which maintains a constant 0.6- to 0.9-volt drop. Figure 4-1F shows connections for both types of diodes.

4-11. THE TRANSISTOR.

4-12. GENERAL. Transistors are used throughout the counter in circuit configurations such as the amplifier, the flip-flop or binary, the trigger circuit, and the one-shot multivibrator. In the following paragraphs, basic transistor operation and a few basic transistor circuits are discussed. These paragraphs discuss the easily observed changes in currents and voltages in transistor circuitry which help technicians locate circuit faults but do not attempt to describe how transistors work internally.

4-13. BIASING AND CONDUCTION. Vacuum tubes and transistors are functionally similar. In the tube a small grid-to-cathode voltage controls a larger plate-to-cathode current flow. In a transistor a small base-to-emitter voltage (more correctly, a small base-to-emitter current) controls a large collector-to-emitter current. A comparison of basic vacuum tube, NPN transistor, and PNP transistor operation is shown in figure 4-2A; indicated current represents conventional flow of positive charges external to the transistor and is not intended to indicate flow of carriers inside the transistor structure. Notice that the effect of emitter-base-collector voltages is totally reversed between NPN and PNP transistors; circuitry which is arranged for an NPN transistor usually functions normally for a PNP transistor if supply voltages are reversed.

4-14. AMPLIFIERS. As with vacuum tubes, three basic amplifier types are available (figure 4-2B). These amplifiers may be used alone or in combination to form complex circuits.

4-15. FLIP-FLOP. The basic flip-flop is a bi-stable two-transistor circuit in which one transistor conducts, holding the other cut off. Each input pulse causes reversal of states; that is, the cut off transistor is turned on and the conducting transistor is cut off. In the flip-flop shown in figure 4-3A, Q1 is initially conducting heavily; its collector voltage is

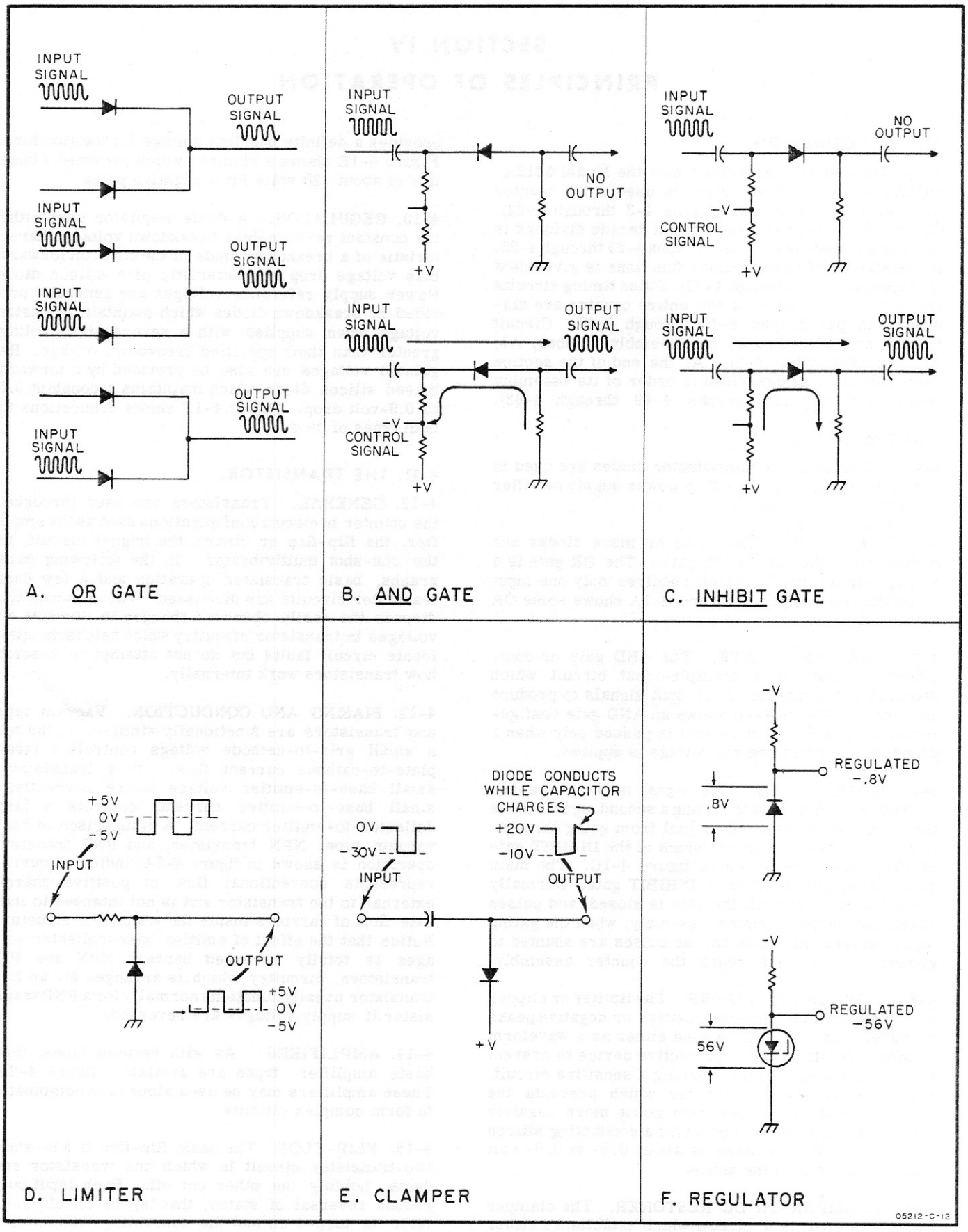

Figure 4-1. Basic Diode Circuits

only slightly negative; a near-zero voltage is supplied to the base of Q2 (junction of R27-R28 divider). The voltage drop across R24 produces a sufficiently negative voltage at the emitter of Q2 to hold Q2 cut off. With Q2 cut off the R18-R19-R20 divider delivers a negative voltage to the base of Q1 to keep it conducting.

4-16. At time t_1 the positive input pulse cuts off Q1; the Q1 collector voltage goes negative and drives Q2 into conduction (R27-R28 divider to Q2 base); the Q2 collector voltage and the Q1 base voltage (R19-R20 divider) then becomes considerably less negative, permitting Q1 to remain cut off. The R26-R27-R28 divider delivers a sufficiently negative voltage to the base of Q2 to drive it into conduction. In a similar manner the positive input pulse at time t_2 cuts off Q2 and starts a sequence of events which ends with Q1 conducting and Q2 cut off. Note that a positive input pulse has no effect on Q1 if it is already cut off. A negative reset pulse applied to the base of Q1 returns the flip-flop to its initial condition (Q1 conducting, Q2 cutoff).

4-17. BINARY CIRCUIT. In this manual a flip-flop which completes its operating cycle and produces an output pulse after receipt of two similar input pulses is called a binary circuit, since it is a counting device in a binary system. The binary circuit is driven from a single input which is connected through a pair of resistors to each transistor base.

4-18. TRIGGER CIRCUIT. The trigger circuit is a limiter or squaring circuit which produces an output waveform with very fast rise and fall times. Initially in the circuit shown in figure 4-3B, the input voltage is positive; Q1 is therefore cut off. The negative voltage applied to the base of Q2 through the R2-R3-R4 divider causes Q2 to conduct heavily; the output voltage (Q2 collector) is therefore only slightly negative.

4-19. At time t_1 the input signal becomes sufficiently negative to drive Q1 into conduction; the voltage at the Q1 collector and the Q2 base (through the R3-R4 divider) becomes less negative and reduces Q2 conduction; lower Q2 conduction reduces the voltage drop across R1 and thus increases the Q1 emitter-base forward bias to cause still heavier Q1 conduction. The process is regenerative; action stops when Q1 is saturated and Q2 is cut off. Capacitor C1 bypasses R3 to couple fast changes in voltage at the Q1 collector to the Q2 base.

4-20. At time t_2 the input voltage goes positive; Q1 conduction is reduced; both the Q1 collector voltage and the Q2 base voltage go negative; Q2 conduction increases. The action ends abruptly with Q1 cut off and Q2 conducting heavily. Note that there is a slight difference in input voltage (called hysteresis) between switching with a negative-going input (time t_1) and switching with a positive-going input (time t_2).

4-21. ONE-SHOT MULTIVIBRATOR. The one-shot or monostable multivibrator is a circuit which generates a pulse of some specified duration following the application of a suitable triggering pulse.

4-22. In the typical one-shot multivibrator shown in figure 4-3C the following conditions exist during the initial stable period: the R5-R6 divider delivers a sufficiently negative potential to the base of Q1 to hold Q1 in saturation; the Q1 collector and Q1 emitter are therefore slightly negative; the R3-R4 divider delivers the Q2 base an even smaller negative voltage to hold Q2 cut off.

4-23. The positive triggering pulse at time t_1 reduces conduction of Q1; the resulting negative-going voltage at the Q1 collector is applied to the Q2 base through the R3-R4 divider (C2 bypasses R3 to provide coupling for the rapidly changing voltage at the Q1 collector); Q2 begins to conduct; the resulting positive-going change in Q2 collector voltage is coupled through C3 to the Q1 base to further decrease Q1 conduction. The process is regenerative and quickly results in Q1 being cut off and Q2 being saturated (astable condition).

4-24. Capacitor C3 now charges at a rate mainly determined by the values of R5 and C3 (main charge path: R1-Q2-C3-R5). When the Q1 base voltage becomes sufficiently negative, Q1 begins conduction; the resulting positive-going Q1 collector voltage is coupled to the Q2 base; the Q2 collector voltage goes negative and is coupled through C3 to the Q1 base to further increase Q1 conduction. The process is regenerative and ends with the circuit in the original quiescent state, Q1 saturated and Q2 cut off.

4-25. BASIC OPERATION OF DECIMAL COUNTER OR DECADE DIVIDER.

4-26. INTRODUCTION. Operation of the decimal counter circuit and the decade divider circuit is similar. The difference between the two is in function. Decimal counter circuits actuate the neon (or Nixie) display, whereas decade divider circuits are used to divide the input signal at J1 or the output of the 100 kc oscillator into the frequencies required to provide the various gate times. Throughout the following discussion circuits are referred to as "counters" though the description applies equally to decade dividers. Paragraphs 4-27 through 4-31 cover general operation of the counters with emphasis on counting logic; paragraphs 4-32 through 4-35 discuss readout circuits; and paragraphs 4-59 and 4-60 discuss specific decimal counter assemblies.

4-27. INPUT AND OUTPUT FROM BINARY. Figures 4-4A and B show a flip-flop connected for operation as a binary circuit (basic flip-flop operation is discussed in paragraphs 4-15 and 4-16). The input signal is applied to bases of both transistors; input pulses are always positive and cause switching by cutting off the conducting transistor. Reset pulses are applied to the base of one transistor; these pulses are always negative and turn on the transistor to which they are applied. Note that one transistor in the binary is designated "A" and the other is designated "$\overline{A}$" (read as "A bar" or "not A"). The positive-going transition at the collector of the $\overline{A}$ transistor (while switching from A conducting to $\overline{A}$ conducting) is differentiated to form the output pulse.

A. TRANSISTOR BIASING

DEVICE	SYMBOL	CUTOFF	CONDUCTING
VACUUM TUBE	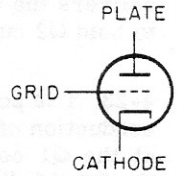	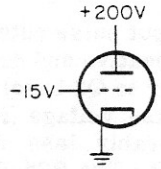	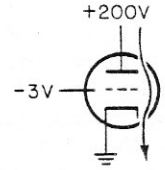
N P N TRANSISTOR	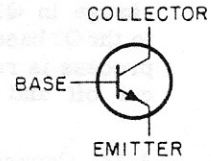	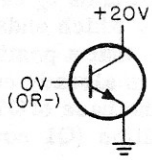	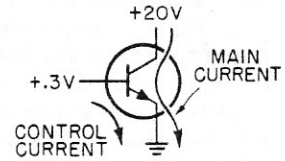
P N P TRANSISTOR	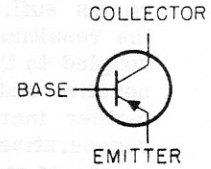	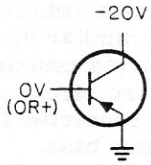	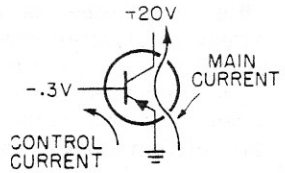

B. AMPLIFIER CHARACTERISTICS

CHARACTERISTIC	COMMON BASE	COMMON EMITTER	COMMON COLLECTOR
INPUT Z	30-50 Ω	500-1500 Ω	20-500K Ω
OUTPUT Z	300-500K Ω	30-50K Ω	50-1000 Ω
VOLTAGE GAIN	500-1500	300-1000	<1
CURRENT GAIN	<1	25-50	25-50
POWER GAIN	20-30 db	25-40 db	10-20 db
	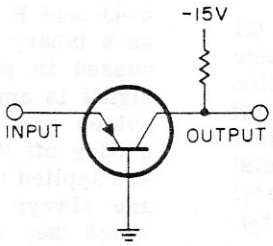	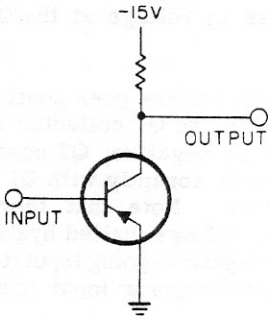	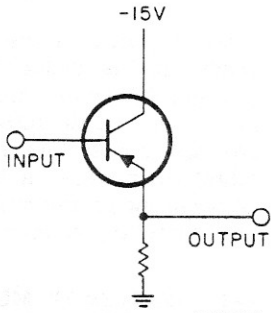

05212-C-19

Figure 4-2. Transistor Operation

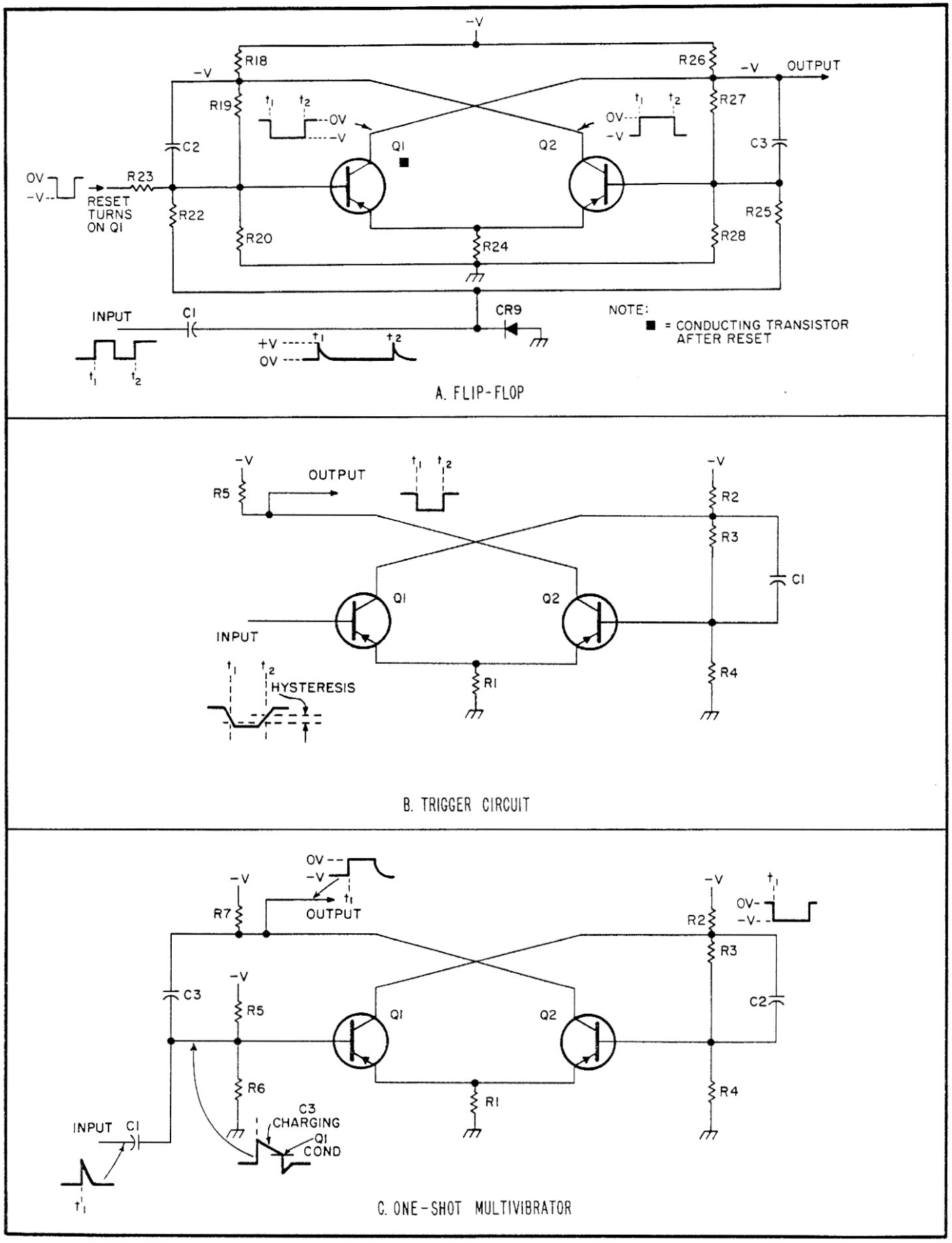

Figure 4-3. Basic Transistor Circuits

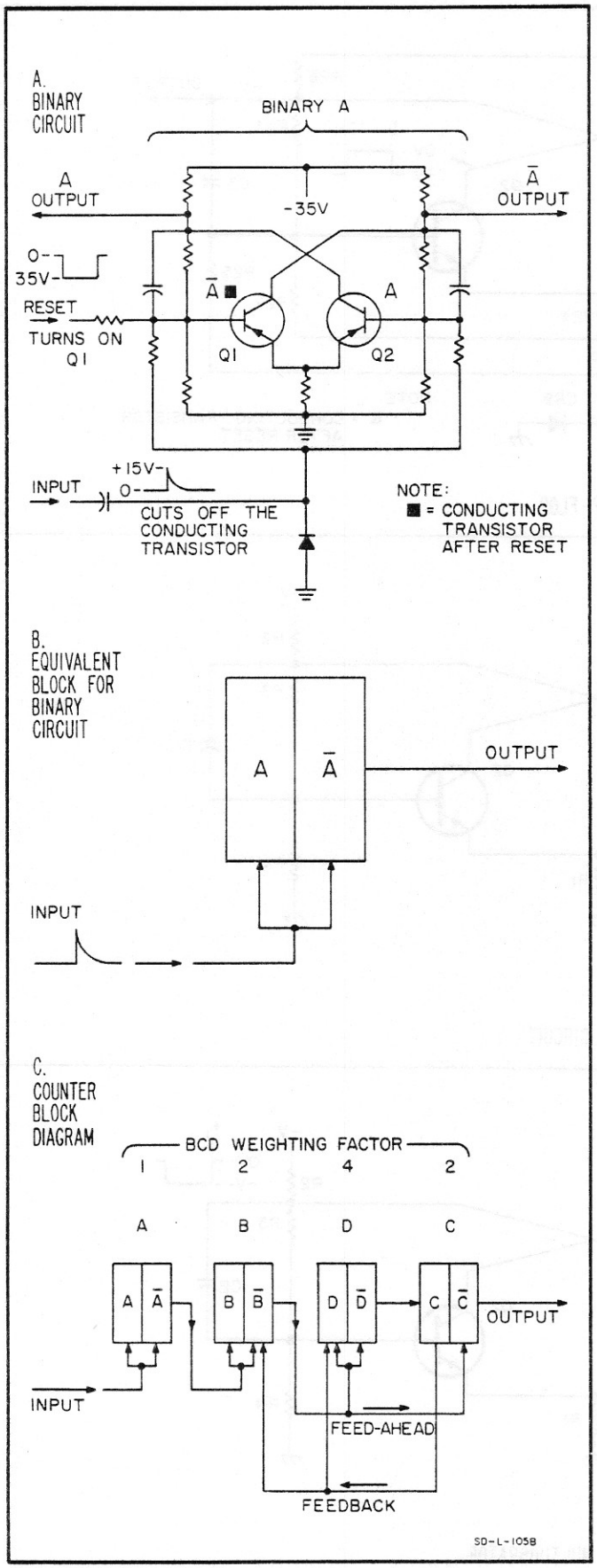

Figure 4-4. Basic Four Binary Counter

4-28. CIRCUIT ARRANGEMENT AND COUNT NOTATION. Figure 4-4C is a block diagram of a typical four-binary decimal counter. Notice that the $\overline{B}$ output is applied to the D, $\overline{D}$, and $\overline{C}$ transistors and that the $\overline{D}$ output is applied only to the C transistor. Each input pulse produces a different combination of conducting and cut-off stages; there are only 10 allowable combinations and each combination represents a different decimal digit. Decimal weighting is the decimal value assigned, arbitrarily, to the output of a pair when the plain-letter transistor is conducting.

a. Decimal Count. Decimal weighting used in the Model 5212A and 5512A counters is shown in figure 4-4C, immediately above each of the four binary stages. The decimal weight each pair represents is present only when the plain-letter side (A, B, D, or C) is conducting; when the barred-letter side ($\overline{A}$, $\overline{B}$, $\overline{D}$, or $\overline{C}$) is conducting, the decimal weight is zero. The decimal count can be determined by adding the decimal weighting of the four stages. For example, if the A, $\overline{B}$, D, and C transistors are conducting. where A = 1, B = 0, D = 4, C = 2, the output is 1 + 0 + 4 + 2 = 7.

b. Binary-coded Decimals. In binary-coded decimal notation, the output is either 1 (when the plain-letter transistor is conducting) or 0 (when the barred-letter transistor is conducting). In binary-coded decimal notation, the order of the binaries is given so that binary-coded decimals can be written with the least significant digit to the right. Thus in the system used in the Models 5212A and 5512A, the binary-coded decimal notation normally is given in the order DCBA. (Counter binaries are shown in the ABDC order on the schematics and in figure 4-4C to increase clarity in showing signal flow.) For the decimal count of 7 used as an example in paragraph a, with D = 1, C = 1, B = 0, A = 1, the binary-coded-decimal number would be 1101.

4-29. SEQUENCE. Figure 4-5 shows the counting sequence for a typical decimal counter. Initially each binary is in the "0" state (decimal count = 0, DCBA = 0000). The following action takes place when a series of input pulses is applied to the counter.

a. The first pulse switches A to the "1" state (DCBA = 0001).

b. The second pulse switches A to the "0" state; the output from $\overline{A}$ causes B to switch to the "1" state (DCBA - 0010).

c. The third pulse switches A to the "1" state (DCBA = 0011).

d. The fourth pulse switches A to the "0" state; the output from $\overline{A}$ switches B to the "0" state; the output from $\overline{B}$ switches both D and C to the "1" state; the resulting signal from C is applied to $\overline{B}$ and D to return B to the "1" state and D to the "0" state (DCBA = 0110). Although $\overline{D}$ is connected to C, no switching occurs at C as a result of the final switching of D since C has not fully recovered from its recent switching.

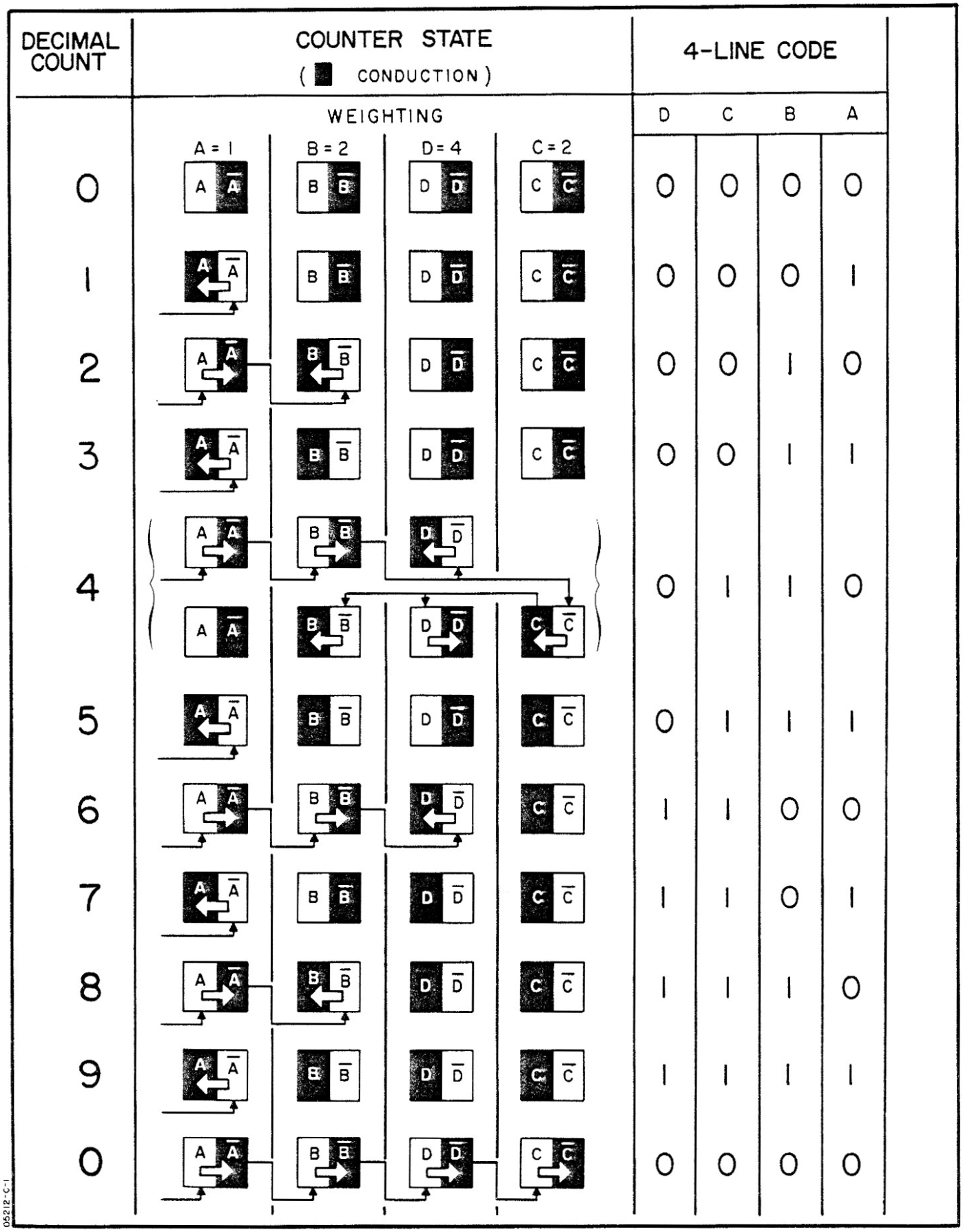

Figure 4-5. Counting Sequence of Four Binary Counter

e. The fifth pulse switches A to the "1" state (DCBA = 0111).

f. The sixth pulse switches A to the "0" state; the output from $\overline{A}$ switches B to the "0" state; the output from $\overline{B}$ switches D to the "1" state (DCBA = 1100).

g. The seventh pulse switches A to the "1" state (DCBA = 1101).

h. The eighth pulse switches A to the "0" state; the output from $\overline{A}$ switches B to the "1" state (DCBA = 1110).

i. The ninth pulse switches A to the "1" state (DCBA = 1111).

j. The tenth pulse switches A to the "0" state; the output from $\overline{A}$ switches B to the "0" state; the output from $\overline{B}$ switches D to the "0" state; the output from $\overline{D}$ switches C to the "0" state (DCBA = 0000). When C becomes "0", $\overline{C}$ produces an output pulse which serves as a carry pulse to a following decimal counter assembly. The counter is now returned to its original count.

4-30. Waveforms showing time relationships for the counter are given in figure 4-6; remember that a driven binary switches only when the input wave is going positive.

4-31. RESETTING TO ZERO. The reset pulse, (negative) is applied to the base of the "0" state transistors ($\overline{A}$, $\overline{B}$, $\overline{D}$, $\overline{C}$) in each binary circuit. If the "0" state transistor is conducting, the pulse has no effect; if the "0" state transistor is not conducting, the pulse turns it on. Thus the reset pulse ensures that all four "0" state transistors are conducting. Figure 4-7 indicates a decimal counter assembly receiving a reset pulse. The counter is in the decimal "4" state (DCBA 0110) and the reset pulse returns the decimal counter assembly to the decimal "0" state (DCBA 0000). Note the difference between a regular input pulse and a reset pulse: a regular input signal is positive, and causes a conducting transistor to cut off; a reset pulse is negative, and causes a cut-off transistor to conduct.

4-32. ELECTRICAL READOUT. A four-line binary-coded-decimal output is available from each decimal counter assembly. A voltage representing the state of each binary is taken from the collector of each of the plain-lettered transistors (A, B, C, and D). A binary "9" is represented by a relatively positive voltage on each line, and a binary "0" is represented by a relatively negative voltage on each line. Table 4-1 summarizes the ten allowable combinations which represent the decimal digits "0" through "9". To protect the binary circuit from being effected by the load, each output line includes a 56K ohm series-connected resistor.

4-33. DIGITAL DISPLAY. A display matrix, consisting of eight neon input lamps and 18 photocell elements is used to convert the binary-coded representation to a decimal representation. The display matrix is shown in figure 4-8. Figure 4-8A is a diagram of the physical layout of the matrix, and figure 4-8B indicates the circuit paths to the various digits in the display.

Table 4-1. Four-Line Code Truth Table

Digit	4-Line Code 0 -, 1 +			
	D	C	B	A
0	0	0	0	0
1	0	0	0	1
2	0	0	1	0
3	0	0	1	1
4	0	1	1	0
5	0	1	1	1
6	1	1	0	0
7	1	1	0	1
8	1	1	1	0
9	1	1	1	1

4-34. As indicated in figure 4-8B, the circuit to each numeral in the display is brought through three series-connected photocell elements. A characteristic of the photocell element is that it is a high resistance element (several megohms) when dark and a relatively low resistance element (less than 7000 ohms) when illuminated. Thus when the three photocell elements which constitute a circuit path are illuminated, resistance drops to about 20,000 ohms and sufficient current can flow to light the display digit. Illuminating elements for the photocells are neon lamps, one of which is connected in the collector circuit of each of the eight transistors in the counting circuit; the lamp lights when the transistor conducts. As explained in paragraph 4-32, a four-binary counting circuit has ten states, ten combinations of conducting and nonconducting transistors, each combination corresponding to one digit. Thus there is a pattern of lighted lamps for each digit. Assigning a binary weight of 1 when the plain-letter lamp (A, B, C, or D) lights, and a weight of 0 when the bar lamp ($\overline{A}$, $\overline{B}$, $\overline{C}$, or $\overline{D}$) lights, the lamp pattern for any digit can be determined from table 4-1. Figure 4-8 shows the counting circuit with transistors D, C, $\overline{B}$, $\overline{A}$ conducting. The lamps associated with these circuits illuminate the photocell elements in the circuit to the digit 6 display.

4-35. The circuit sequence required to light a lamp is discussed in the following paragraphs. The sequence discussed will have more meaning if it is remembered 1) that a much higher voltage is required to fire a neon lamp than to maintain illumination in the lamp (for the lamps used in the Models 5212A/5512A, 70 volts for firing and 55 volts for maintaining illumination), and 2) that after application of the firing voltage the lamp cannot fire immediately because of the time required for ionization. Arrangement of the binary lamp circuit used in the Models 5212A/5512A is indicated in figure 4-9B. As will

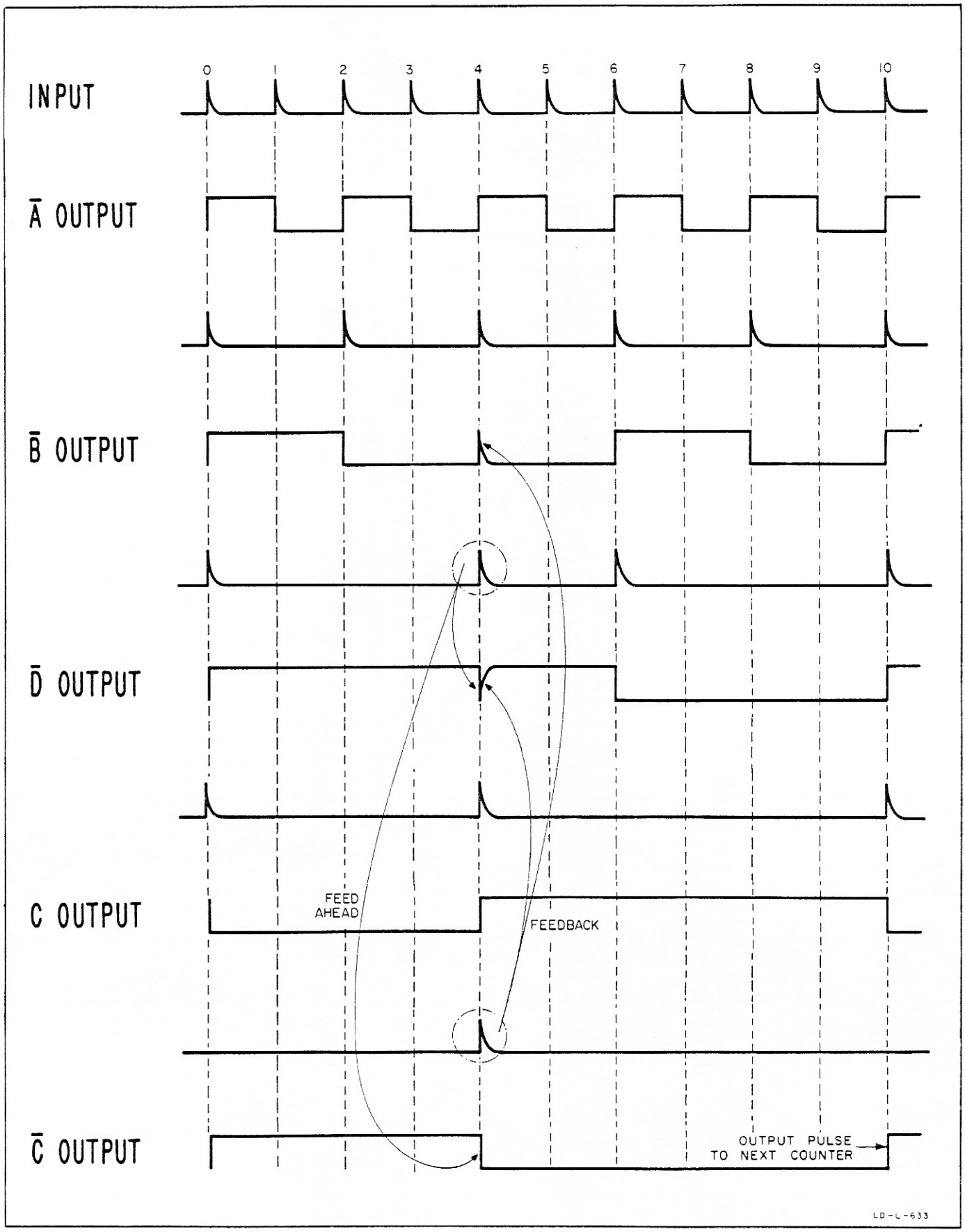

Figure 4-6. Waveforms in Four Binary Counter

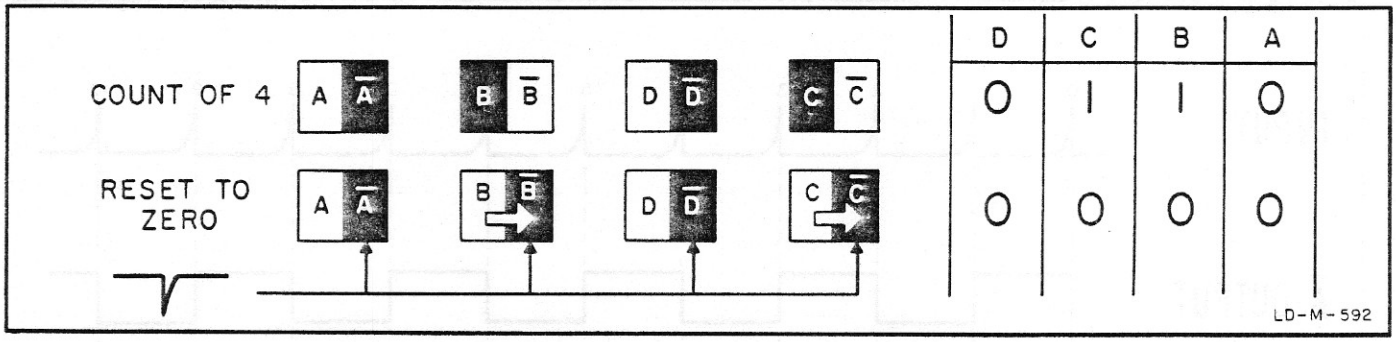

Figure 4-7. Typical Reset Operation in Four-Binary Decimal Counter Assembly

be discussed later, diodes connected between the lamps make it possible for the circuit to store a previous count even though the binaries are switching during the next counting period. In decimal counter assemblies which do not have this storage feature, the display changes with each step the binaries take in setting up the circuit for a given digit. To clarify certain aspects of the lamp circuit sequence, the lamp circuit will first be discussed as though there were no diodes between the two lamps of a binary; this circuit is shown in figure 4-9A.

a. Lamp Circuit without Diodes.

(1) As indicated in figure 4-9A-1, the lamp associated with the conducting transistor is lighted, the lamp associated with the nonconducting transistor is dark. Typically, voltages will be as shown. Since the transistor associated with the dark lamp is not conducting, no current is flowing in the circuit of the dark lamp, and voltage across it is established (a) by the circuit of the conducting lamp and its transistor, and (b) by the voltage on the collector of the non-conducting transistor. This voltage is not high enough to fire the dark lamp.

(2) When the binary shown in figure 4-9A changes state, the voltage on the collector of transistor $\overline{A}$ (now conducting) drops to -1 volt, while the voltage on the collector of nonconducting transistor A rises to -30 volts. With transistor A turned off, current through lamp A decreases, and the voltage at the junction of the two lamps rises. Since lamp A cannot fire until ionized, voltage will continue to rise after 70-volt level is reached, and typically will reach approximately 93 volts during the ionization period. After the dark lamp fires, the voltage across it stabilizes at about 55 volts, and since the circuit to the other lamp is open, the other lamp extinguishes.

(3) Circuit state after lamp A has fired is shown in figure 4-9A-2; it is the mirror image of that shown in figure 4-9A-1.

b. Lamp Circuit with Diodes. The steady, or storage, state of the lamp circuit is indicated in figure 4-9B-1. The diodes are forward-biased, effectively connecting the lamps in parallel and clamping them to approximately -1.6 volts. One lamp is conducting, the other lamp is dark. Since both lamps are clamped to -1.6 volts, regardless of the state of the binary, there will never be sufficient voltage across the dark light to fire it and it will remain dark until 1) the diodes are reverse-biased and 2) there is conduction through the transistor in whose collector circuit the lamp is connected.

(1) When the gate closes at the completion of the counting period (see paragraph 4-68), a -30 volt transfer pulse (see paragraph 4-74) is applied to the binary diodes, reverse-biasing them. With the diodes reverse-biased, the lamps are disconnected from each other, and the circuit for each lamp is now completed through its associated transistor.

(2) If the digit recorded by the binary is the same as that recorded during the previous counting period, the lamps "see" the voltages required to maintain them without change. If, however, the digit is such that the binary state is changed, the lamps change state. With the diodes reverse-biased, circuit action is the same as that described in subparagraph a. Condition of the circuit during the initial period of the transfer pulse when voltage across the dark lamp is increasing is indicated in figure 4-9B-2; circuit condition after the lamp has fired is indicated in figure 4-9B-3.

c. Disabling the Storage. When the function selector is set to MANUAL or the STORAGE switch on the rear panel is in the off position, the storage feature is disabled. Circuit action is then described in subparagraph a.

4-36. BASIC COUNTER FUNCTIONS.

4-37. GENERAL.

a. The basic counter circuit can be adapted to provide various modes of operation. Each arrangement includes a main gate with 1) a signal input and 2) a control input. Following the main gate is a cascaded series of decimal counter assemblies which accumulate the pulses and actuate the display; the display is digital and is the total of the pulses which have passed through the main gate. The various modes of operation are briefly discussed in Paragraphs 4-38 through 4-41.

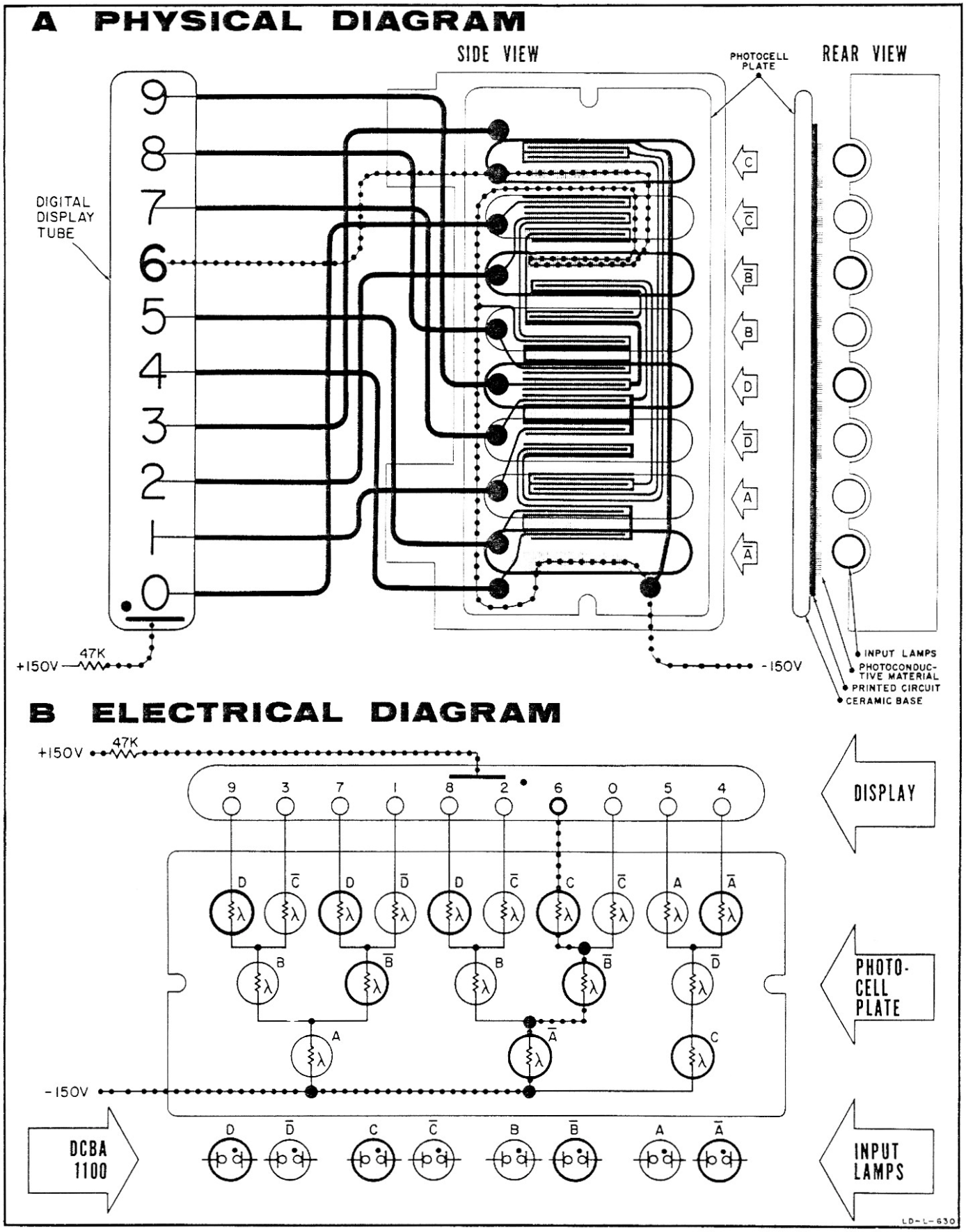

Figure 4-8. Display Matrix

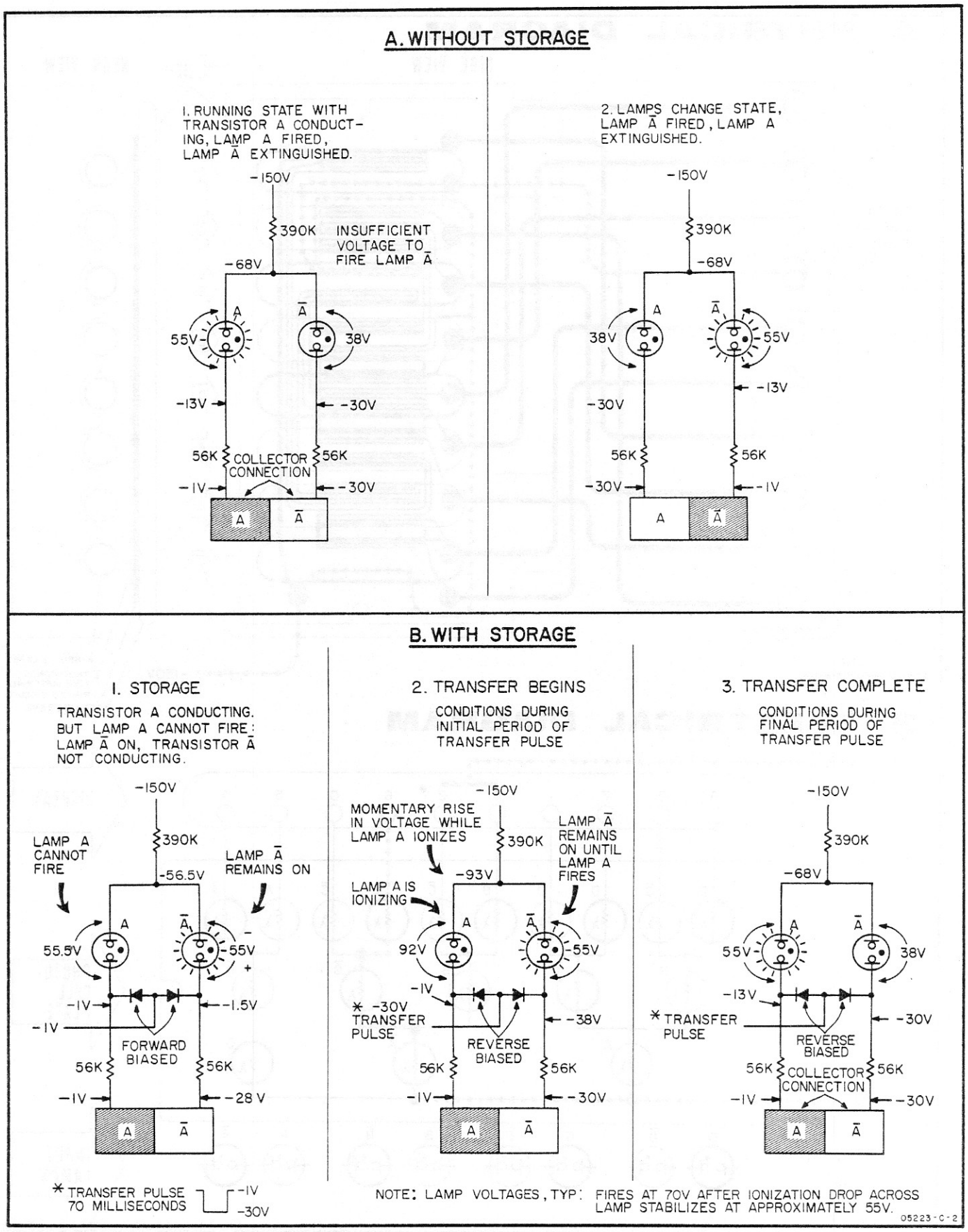

Figure 4-9. Lamp Control

b. Circuit sequence in the various modes of operation is similar: pulses pass through the main gate to the decimal counter assembly for a predetermined period, are counted and displayed. The difference between arrangements is in 1) the source of the pulses counted, and 2) the source of the gating signal which establishes the length of time during which the main gate is open and pulses pass to the decimal counter assemblies.

c. In the following discussion of the various modes of operation, remember that when the gate is open there is a circuit path to the decimal counter assemblies and they receive pulses; when the gate is closed the circuit path to the decimal counter assemblies is blocked and they do not receive pulses.

4-38. TOTALIZING. In the totalizing mode (figure 4-10), the gate flip-flop is triggered by the MANUAL START-STOP switch. The decimal counter assemblies cascade-count the total number of input pulses applied while the main gate is held open manually.

4-39. FREQUENCY MEASUREMENT. The circuit arrangement shown in figure 4-11 permits control of the main gate by the counter time base. The gate is opened for a controlled time, therefore the accumulated count represents the number of input cycles (or pulses) during this time. Controlled intervals are from 10 seconds down to 10 milliseconds in decade submultiples, selectable with the front panel function selector. The decimal point is automatically positioned so the readout is always in kilocycles. In the frequency mode, the gate flip-flop is triggered by the counter time-base circuit.

4-40. PERIOD MEASUREMENT. The arrangement shown in figure 4-12 provides the means for measuring the period of the input signal. The period of a signal is the time required for the completion of one cycle; the counter displays the time in milliseconds or microseconds. The period measurement is obtained by making the duration of the gating signal equal to the period of the input signal, and counting a train of pulses supplied by the counter time base. The displayed count is the number of time-base pulses which occur during one period of the input signal. For multiple period measurements, the input signal is divided by the selected decade factor so that the gating signal is the selected multiple of one period. The decimal point is positioned to give the readout in milliseconds or microseconds per single period of the input signal.

4-41. RATIO MEASUREMENT. As shown in figure 4-13, the frequency ratio of two inputs can be measured by a circuit arrangement similar to that used for period measurement. One input signal is applied to the main gate while the gating signal is made equal to the period (or decade multiple of the period) of the other signal. The displayed count represents the number of cycles of one input which occurs during the period of one cycle (or decade multiples of one cycle) of the other input.

4-42. STANDARD FREQUENCY OUTPUT. The output of the internal 100-kc oscillator is available at STD connector J2 on the rear panel when S3 is in INT position.

Note

In the following discussion complete reference designations are used to identify components. This is to prevent confusion between reference designations of components located on the chassis and components located on an assembly. For example, "R1" would refer to a component located on the chassis, while "A1R1" would refer to a component located on the input amplifier assembly A1.

4-43. SEQUENCE CIRCUITS.

4-44. GENERAL. After the main gate closes, ending the predetermined counting period, the counter requires pulses to trigger the display and reset operations in a precisely-timed sequence (figure 4-14). The counter also requires a variable pulse; this pulse (the inhibit pulse) disables the main gate thus performing two functions: 1) it prevents the start of a new count until after the transfer and reset operations are completed and 2) it determines the sampling rate. The pulse which results in actuation of the display (transfer pulse) is generated by the transfer multivibrator, and generation of the reset and inhibit pulses is controlled by the sample-rate multivibrator. Timing and other data about the pulses is described in paragraphs 4-45, and 4-46; how the counter uses the pulses is described in the following subparagraphs.

a. Transfer Pulse. Application of the transfer pulse results in the transfer of the count from the binaries to the lamps. As discussed in paragraph 4-34, the circuit to the digital display is through photocell elements that conduct when the lamps controlled by the binaries are lighted. During the time the binaries are counting the next digit, forward-biased diodes clamp the lamps at a relatively positive voltage to prevent the lamps from changing state when the binaries change state as they build up the count. To reinstate binary control of the lamps it is necessary to disable the clamping diodes; disabling is effected with the transfer pulse, a -30 volt pulse which reverse-biases the clamping diodes.

b. Reset Pulse. After the digit has been transferred from the binary circuit to the lamp circuit, the binaries must be reset to zero; a negative pulse is required (see paragraph 4-75). When operating in the storage mode, operation would be satisfactory if the binaries were reset immediately after the count has been transferred to the lamp circuits. However, with the storage feature disabled (STORAGE turned off), it is desirable to hold the count in the binaries, thus maintaining the display until a new count is about to start. To take care of the non-storage condition, the circuit is designed so the display is always maintained, regardless of how slow a sample rate is used, until a new count is about to start. The sample rate is determined by the length

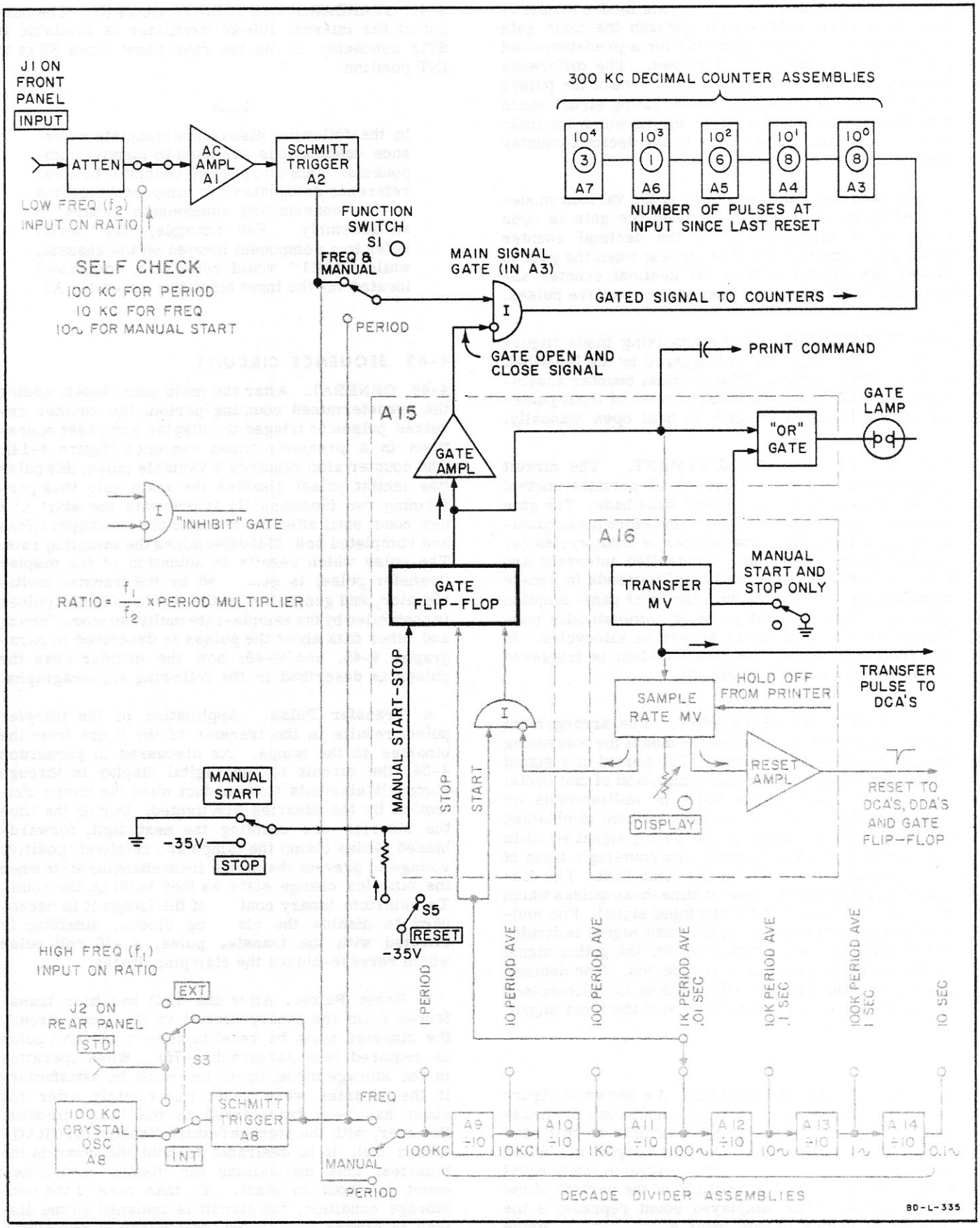

Figure 4-10. Basic Totalizing Counter

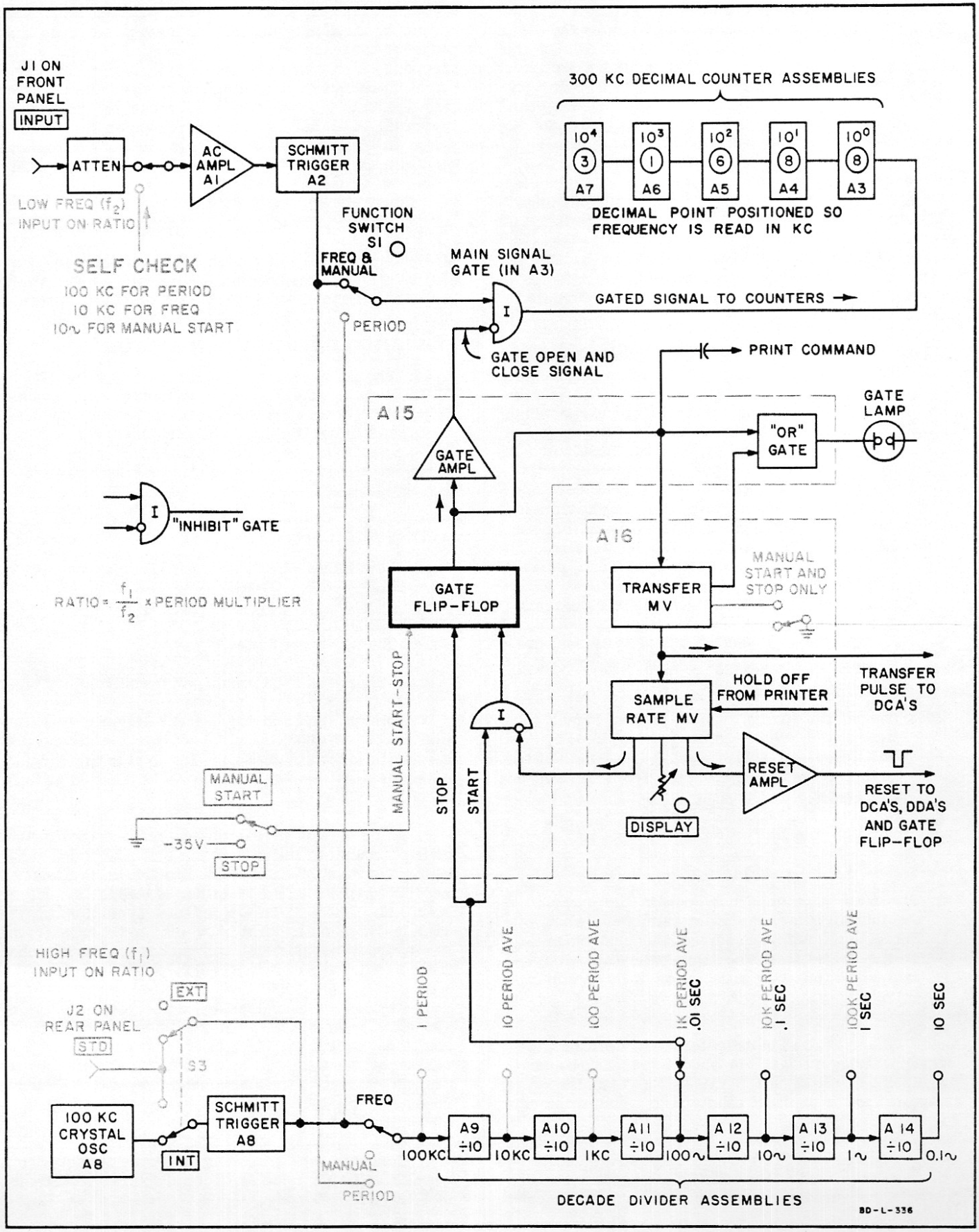

Figure 4-11. Basic Frequency Measuring Counter

of the inhibit pulse (subparagraph c), and the display is maintained under all conditions by timing the reset to occur eight milliseconds before the end of the inhibit pulse, i.e., approximately eight milliseconds before the main gate opens again.

c. Inhibit Pulse. For a good steady display and an accurate count of the next digit, it is necessary to maintain the main gate closed until after the transfer and reset operations are completed. The inhibit pulse is the means the circuit uses to delay the opening of the main gate. How much gate-opening delay is required varies with operating conditions and thus the length of the inhibit pulse has been made variable by operation of a front panel control, DISPLAY. How the inhibit pulse delays opening of the main gate is discussed below.

(1) The main gate is opened and closed by pulses shaped by the gate flip-flop; when the counter is operated in the frequency mode, the counter time base supplies the train of pulses which trigger the gate flip-flop. One pulse triggers the gate-opening pulse, and the next pulse in the train triggers the gate-closing pulse. When counting higher frequencies, therefore, more time is required to complete the transfer and reset operations than is available between the stop pulse and the next start pulse. To provide the required time between pulses, there is an inhibit gate in the start lead to the gate flip-flop. The characteristic of an inhibit gate is that it is normally open, but upon application of a second signal it closes, preventing the passage of pulses for so long as the second signal is applied.

(2) The inhibit pulse, which is the signal that closes the inhibit gate, is supplied by the sample-rate multivibrator. The length of the inhibit pulse can be varied from 0.2 second to 5 seconds by changing the setting of variable resistor R8, which is brought out to the front panel as the DISPLAY control.

Note

The main gate does not open at the end of the inhibit pulse; the main gate opens when the gate flip-flop receives the next pulse in the train from the time base (i.e., the next pulse following completion of the inhibit pulse).

4-45. TRANSFER. The transfer multivibrator (A16-Q1, Q2), triggered at the end of the gating signal, produces a 70-millisecond pulse. The transfer pulse is applied to the decimal counters to transfer the new count to the display.

4-46. SAMPLE-RATE. The sample-rate multivibrator is triggered at the leading edge of the transfer pulse; it produces a variable 0.2-second to 5-second pulse.

a. Reset. The trailing edge of the sample-rate pulse resets the decimal counters and decade dividers.

b. Inhibit. The sample-rate multivibrator also produces the inhibit pulse, which starts at the leading edge of the transfer pulse and lasts until eight milliseconds after the end of the sample-rate pulse. This eight millisecond delay is due to the time required for the collector of A16Q3 to reach the breakdown potential of A16CR7. The inhibit pulse disables the gate flip-flop to prevent retriggering during transfer and display time, and until the decimal counters have reset to zero.

4-47. OVERALL COUNTER OPERATION.

4-48. The counter is shown in block form in figure 4-15. The function switch (S1) switches signals to arrange circuits to perform each counter function.

4-49. INPUT SENSITIVITY CONTROL.

4-50. The input sensitivity control (designated SENSITIVITY on front panel) is an attenuator which makes it possible to use signal levels up to 500 volts peak. The sensitivity control also switches the internal 100-kc oscillator to input amplifier A1 in the CHECK position. Refer to the schematic diagram, figure 5-4, for circuit details.

4-51. FUNCTION SWITCH S1.

4-52. The function switch is a 12-position switch (MANUAL STOP, START: FREQUENCY with gate times of 0.01, 0.1, 1.0, and 10 seconds; PERIODS AVERAGED for 1, 10, 100, 1K, 10K, and 100K). Switch functions are listed below.

a. Connects all decimal point control voltages.

b. Applies start and stop input voltages to gate flip-flop (A15Q1-A15Q2) at pin 9 of the gate control assembly to force the gate flip-flop to gate open or gate closed state when switched to MANUAL START or MANUAL STOP.

c. Holds A16Q4 of sample rate multivibrator cut off by grounding its base at pin 3 of A16 and thereby keeps the sample-rate multivibrator in "state after reset" when switched to either MANUAL START or MANUAL STOP. This prevents operation of the sample-rate multivibrator which could trigger the reset circuit as the function switch is quickly switched from START to STOP to START.

d. Applies reset pulses by momentarily supplying -35 volts when the function switch is moved between positions, except in MANUAL START or STOP. This resets all counter circuits if function selection is changed during a measurement operation. Manual reset switch (S5) is connected to reset output at pin 14 of display control assembly A16.

e. Connects input frequency to decade divider string when in PERIOD mode or decimal counter string when in FREQUENCY mode.

f. Connects 100-kc internal time base to decimal counter string when in PERIOD mode or decade divider string when in FREQUENCY mode.

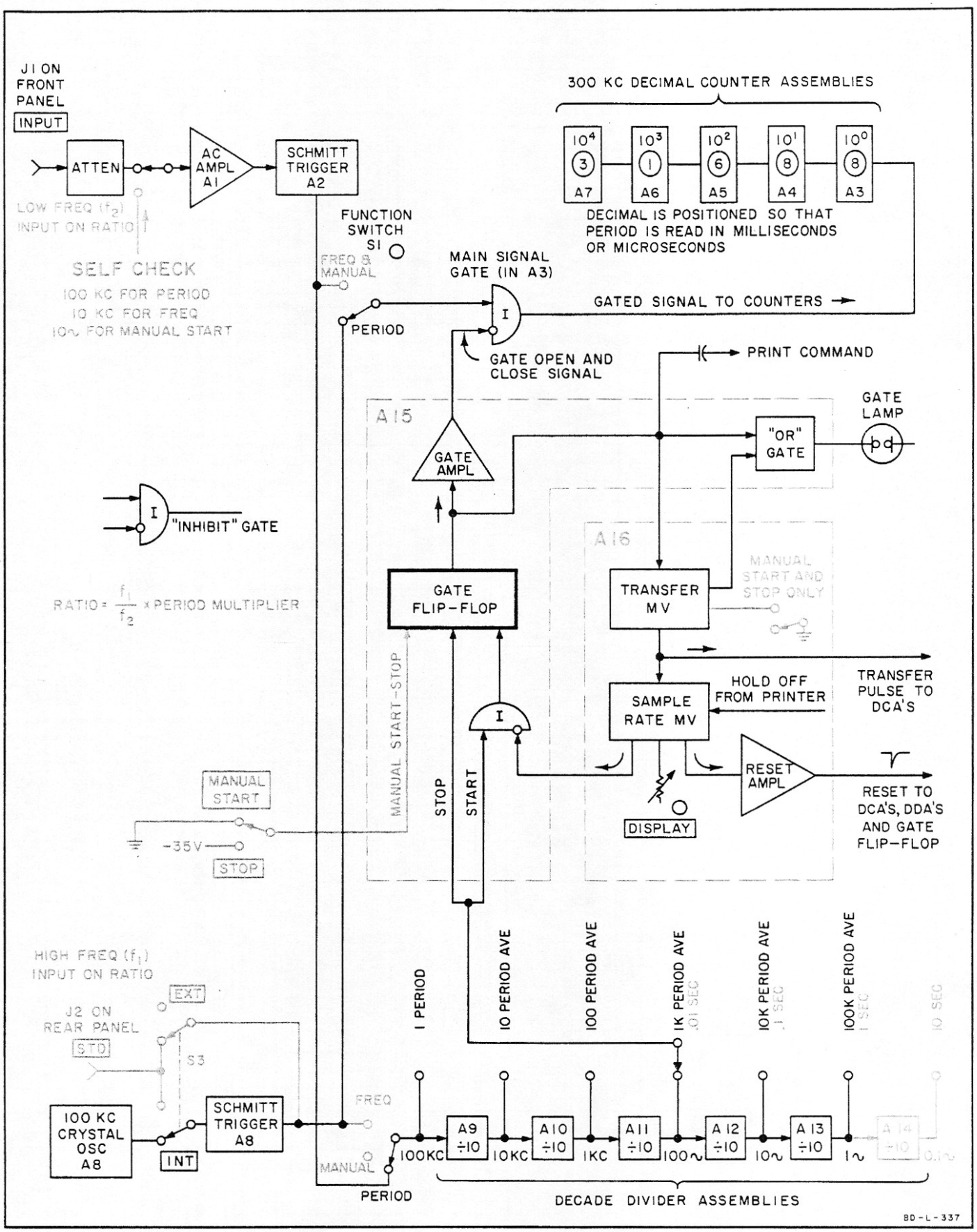

Figure 4-12. Basic Period Measuring Counter

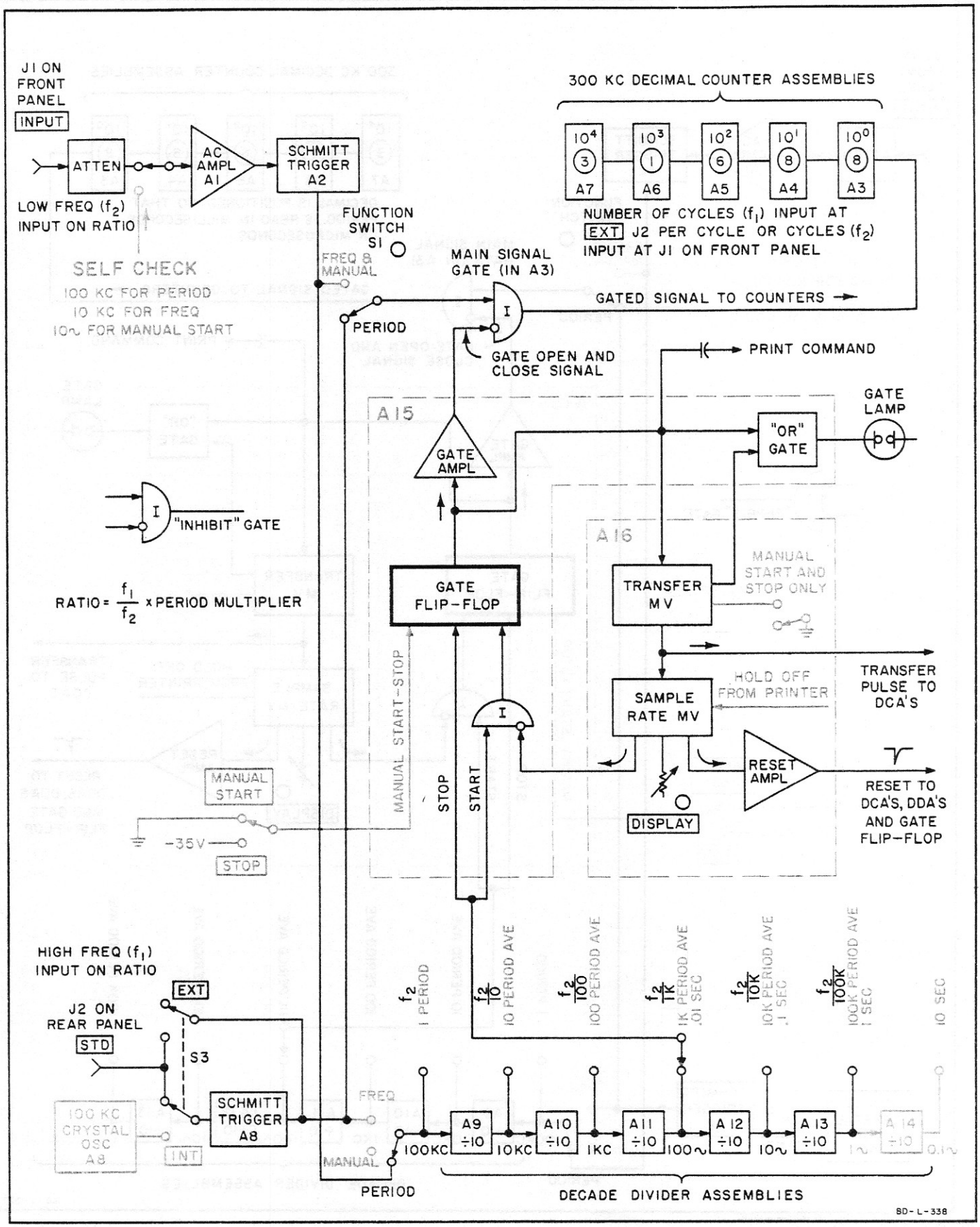

Figure 4-13. Basic Ratio Counter

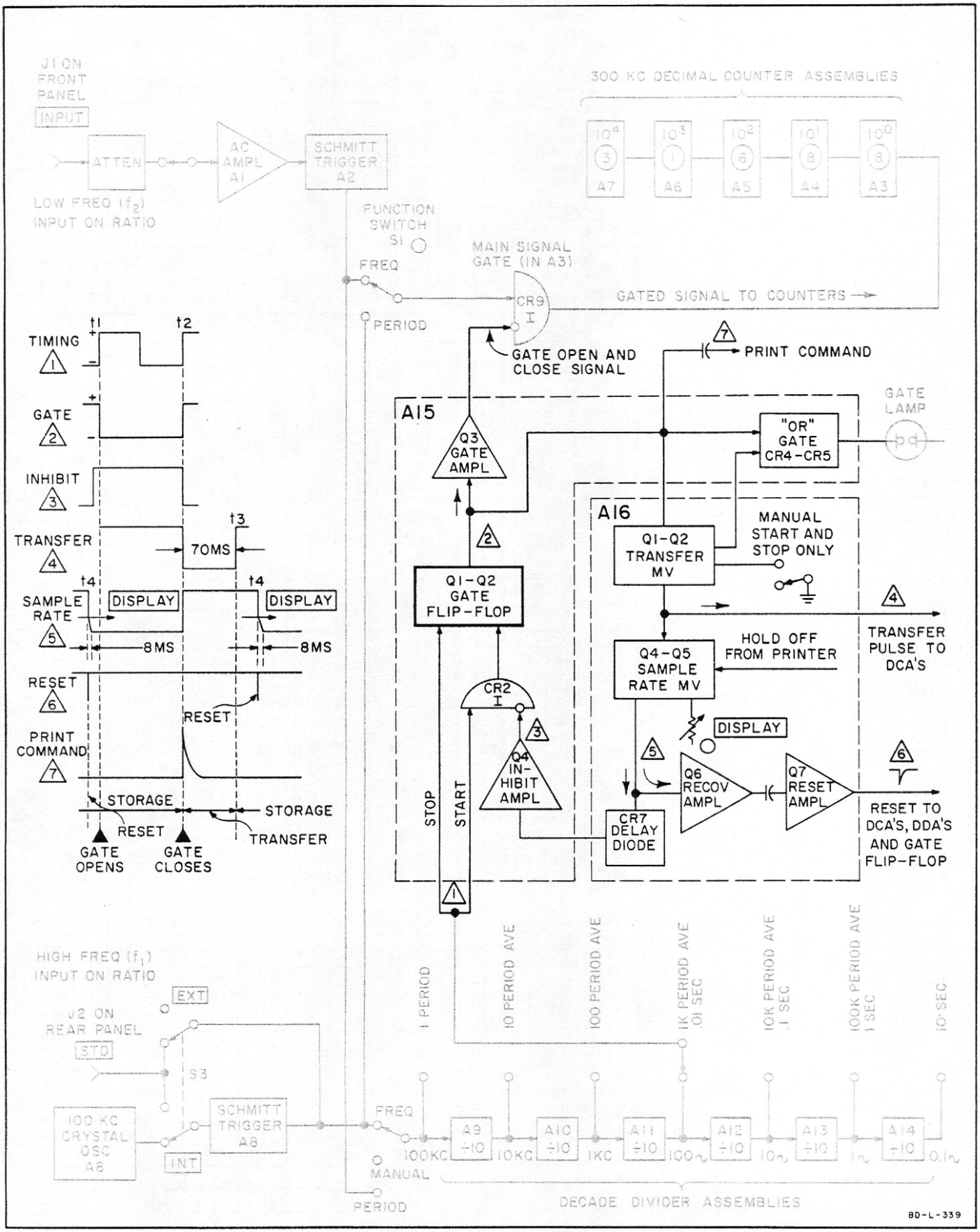

Figure 4-14. Timing Circuits Simplified Block Diagram

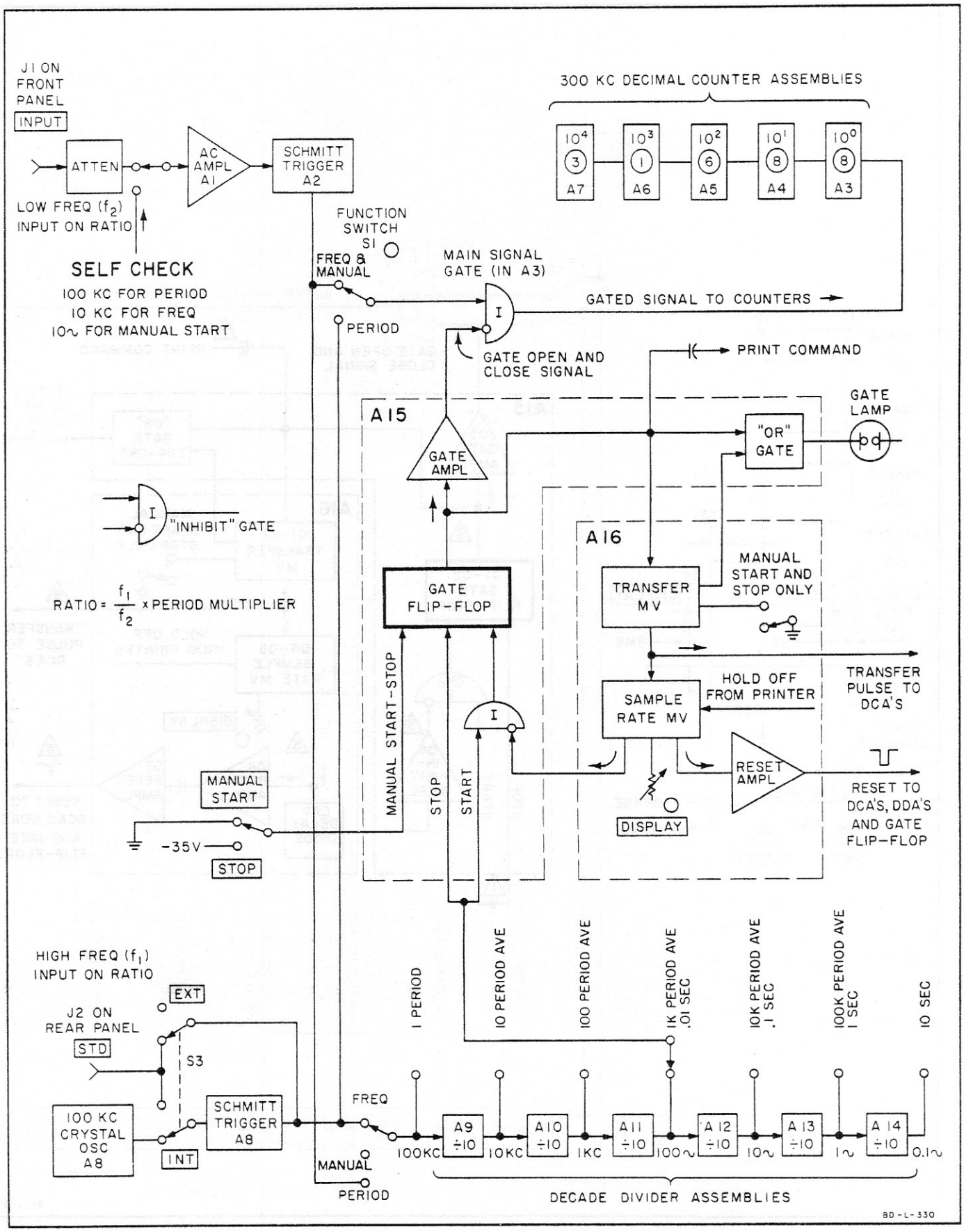

Figure 4-15. Simplified Functional Diagram

g. Connects output of proper decade divider assembly for selected gate timing to gate control assembly A15.

h. Disconnects gate lamp hold pulse (see paragraph 4-73 in MANUAL START and MANUAL STOP positions.

j. With SENSITIVITY control in CHECK position:

(1) In any of the PERIOD positions: a) connects time base to input amplifier A1, and decimal counter assembly A3, b) connects output of input Schmitt trigger A2 to decade divider A9 (and to pin 13 of gate control assembly A15 in single period position), c) connects output of proper decade divider for selected gate timing to gate control assembly A15.

(2) In any of the FREQUENCY positions: a) connects time base to decade divider A9, b) connects 10 kc signal (output of decade divider A10) to input amplifier A1, and c) connects output of proper decade divider for selected gate timing to gate control assembly A15.

(3) In MANUAL START position: a) connects time base to decade divider A9, b) connects output of decade divider A12 (10 cps) to input amplifier A1, c) grounds the base of A15Q1 of the gate flip-flop thus keeping the main gate open, and d) grounds the base of A16Q4 of the sample rate multivibrator thus preventing any output pulses from the display circuit reaching the gate control flip-flop.

(4) In MANUAL STOP position: connects -35 volts to the base of A15Q1 of the gate flip-flop thus keeping the main gate closed.

4-53. FUNCTIONS.

4-54. GENERAL. The function selector switch S1, figure 4-16, performs the key switching operations to arrange circuits for different measurements. The signal which is counted by the decimal counters is always present as one input to inhibit gate A3CR9 (paragraph 4-7). The other input is supplied by the gate flip-flop (A15Q1-A15Q2). The triggering pulse which is applied to the gate flip-flop is supplied by a) J1 for period and ratio measurement; b) decade dividers for frequency, multi-period and multiple ratio; and c) by dc levels from S1 for manual start and stop.

4-55. SIGNAL FLOW. The following outlines signal flow for each type of measurement.

a. MANUAL. Input signal amplified in A1, shaped in trigger assembly A2, passes to main signal gate (located in A3), and is applied to base of A3Q1 and A3Q2.

b. MANUAL CHECK. Same as MANUAL except that input to amplifier A1 is 10-cps signal taken from decade divider A12.

c. FREQUENCY. Input signal path same as for MANUAL. Main signal gate is opened and closed by selected frequency from decade divider.

d. FREQUENCY CHECK. Same as for FREQUENCY except that input to amplifier A1 is 10-kc signal taken from decade divider A9.

e. PERIOD. Input signal amplified in A1, shaped in A2, passes directly to input of gate flip-flop (base of A15Q1) and thus controls on-time of main signal gate. The internal time base is applied directly to main signal gate where it is counted.

f. PERIOD CHECK. Same as PERIOD except that input signal and signal which controls the gate are supplied by the 100-kc internal crystal oscillator.

g. MULTI-PERIOD. Same as PERIOD except that output signal from A2 is input signal to decade divider A9. Selected output from decade dividers goes to gate flip-flop which opens and closes the main signal gate.

h. MULTI-PERIOD CHECK. Same as MULTI-PERIOD except that both input signal and signal which controls the main signal gate are supplied by the internal time base.

i. RATIO. Same as PERIOD, except J2 in EXT is high frequency (counted frequency) input and J1 is low frequency (gate open and close) input.

j. MULTI-RATIO. Same as MULTI-PERIOD except as noted in RATIO.

4-56. CIRCUIT DETAILS. Refer to the schematic diagrams, in section V, for circuit details. The basic INHIBIT gate description given in paragraph 4-7, applies to the main signal gate A3CR9. Note that the signal being counted does not go through A3CR9. The gate is open (signal passes to be counted) when A3CR9 is reverse-biased; the gate is closed (signal shunted through diode A3CR9 to ground) when A3CR9 is forward-biased. Operation of the trigger circuit (A2Q1-Q2Q2) is similar to the circuit discussed in paragraphs 4-18 through 4-20.

4-57. INPUT AMPLIFIER A1 AND SCHMITT TRIGGER A2.

4-58. Input amplifier A1 (a linear amplifier) and Schmitt trigger A2 (a shaping circuit) provide a constant amplitude signal necessary to drive decimal counter A3, decade divider A9, or gate control A15. A1Q1 and A1Q2 are emitter followers used to increase the input impedance followed by amplifier A1Q3 with a voltage gain of about 8. Diode A1CR1 is a diode limiter which by-passes all positive going signals and clips negative going signals over 8 volts. For circuit details, refer to the schematic diagram, figure 5-4.

4-59. DECIMAL COUNTER ASSEMBLY A3-A7.

4-60. The decimal counter is shown in block diagram form in figure 4-17. Note the inclusion of clipper diodes CR13, CR16 through CR18. These permit only

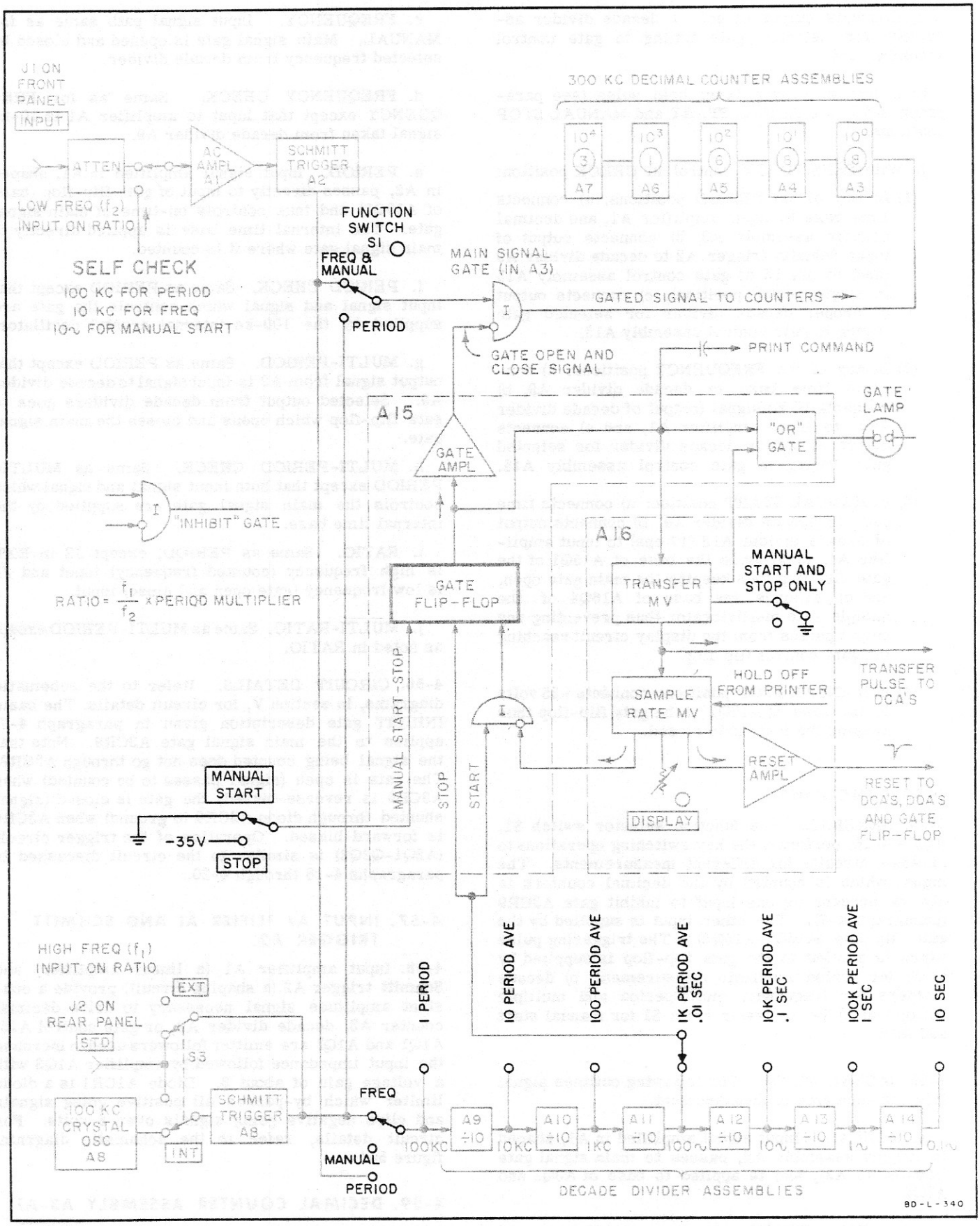

Figure 4-16. Block Diagram for Function Control Switch S1

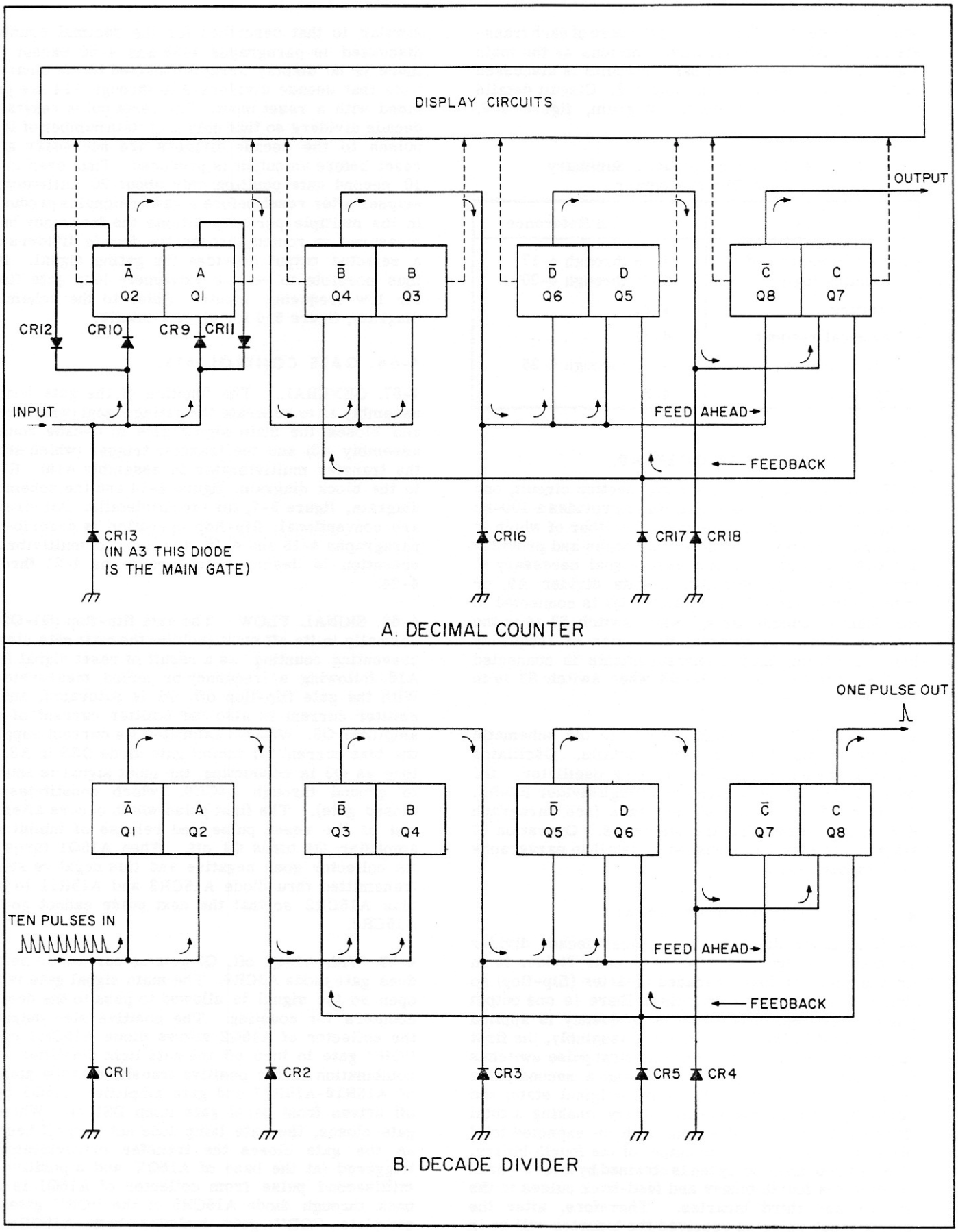

Figure 4-17. Decimal Counter and Decade Divider Block Diagram

positive pulses to be delivered to the base of each transistor. In A3 only, CR13 also functions as the main signal gate. Operation of basic circuits is discussed in the paragraphs listed in table 4-2. Circuit details are given in the schematic diagram, figure 5-9.

Table 4-2. Basic Operation Summary
Four-Binary Counter

Area	Paragraph Reference
Binary circuits and Counting logic	4-15 through 4-17 4-25 through 4-30
Resetting	4-31
Electrical readout	4-32
Digital display	4-33 through 4-35
Clipper diodes	4-8

4-61. OSCILLATOR-TRIGGER A8.

4-62. GENERAL. This is a two-section circuit, one of which is the oscillator (Q1) which provides a 100-kc signal as an internal time base, the other of which is a Schmitt trigger (Q2-Q3) which shapes and provides a constant amplitude time base signal necessary to drive decimal counter A3, decade divider A9, or gate control A15. The oscillator Q1 is connected to the Schmitt trigger Q2-Q3 when switch S3 is in the INT position. An external time base or frequency being used for RATIO measurements is connected to the Schmitt trigger Q2-Q3 when switch S3 is in the EXT position.

4-63. CIRCUIT DETAILS. Refer to the schematic diagram, figure 5-5 for circuit details. Oscillator Q1 is a crystal controlled blocking oscillator. DC bias for the Q1 base is supplied through divider R2-R3. Limiter CR1 prevents signal peaks (see paragraph 4-8) from overdriving transistor Q2. Operation of trigger circuits is discussed in detail in paragraphs 4-17 through 4-19.

4-64. DECADE DIVIDERS A9-A14.

4-65. A block diagram of a typical decade divider is shown in figure 4-17b. A decade divider is an arrangement of four cascaded binaries (flip-flop) so that for every ten input pulses there is one output pulse. Consequently, when a frequency is applied to the input of the decade divider assembly, the first binary divides it by two (since the first pulse switches the binary to the opposite state and a second pulse is required to return it to its original state) and again by two in the second binary (making a total division by four) and so on, with an expected total division of sixteen at the output of the fourth binary. The desired division by ten is obtained by a feed-ahead pulse to the fourth binary and feed-back pulses to the second and third binaries. Therefore, after the eighth input pulse is received the binaries will be in a state as if they had counted fourteen pulses. Then, when the ninth and tenth pulses are received the desired final output pulse is produced. Operation is similar to that described for the decimal counters discussed in paragraphs 4-59 and 4-60 except that there is no display array connected to the binaries. Note that decade dividers A10 through A14 are provided with a reset input. The reset pulse resets the decade dividers so that only a certain number of input pulses to the decade dividers are necessary after reset before an output is produced. Thus even in the 10 second gate position only about 20 milliseconds elapses after reset before a gating signal is produced. In the multiple period positions the frequency being measured is routed through the decade dividers and a selected output provides the gating signal. It is thus possible to realize extremely long gate times for low frequency inputs. Refer to the schematic diagram, figure 5-6 for circuit details.

4-66. GATE CONTROL A15.

4-67. GENERAL. The function of the gate control assembly is to generate the gating signal (which opens and closes the main signal gate in decade counter assembly A3) and the transfer trigger (which starts the transfer multivibrator in assembly A16). Refer to the block diagram, figure 4-14 and the schematic diagram, figure 5-7, for circuit details. All circuits are conventional; flip-flop operation is described in paragraphs 4-15 and 4-16, and one-shot multivibrator operation is described in paragraphs 4-21 through 4-24.

4-68. SIGNAL FLOW. The gate flip-flop (Q1-Q2) is normally in its off state (holding the main gate closed, preventing counting) as a result of reset signal from A16 following a frequency or period measurement. With the gate flip-flop off, Q1 is saturated, and its emitter current is also the emitter current of gate amplifier Q3. With Q3 saturated its current supplies the bias current for inhibit gate diode CR9 in A3. So long as Q3 is conducting, the input signal is shunted to ground through A3CR9, (which constitutes the closed gate). The first pulse which occurs after the end of the reset pulse and release of inhibit gate amplifier Q4 turns Q1 off. When A15Q1 turns off, its collector goes negative and this negative step is transmitted thru diode A15CR3 and A15R11 to back bias A15CR2 so that the next pulse cannot go thru A15CR2.

4-69. With A15Q1 off, Q3 gets no current so neither does gate diode A3CR9. The main signal gate is now open so the signal is allowed to pass to the decimal counters for counting. The positive step output at the collector of A15Q2 allows diode A15CR4 of the "OR" gate to turn off the gate light amplifier. The combination of the positive transition at the junction of A15R16-A15R17 and gate amplifier A15Q5 being off drives front panel gate lamp DS1 on. When the gate closes, the gate lamp does not turn off because as the gate closes the transfer multivibrator is triggered (at the base of A16Q2) and a positive 70-millisecond pulse from collector of A16Q1 is sent back through diode A15CR5 of the "OR" gate (the complete "OR" gate includes both A15CR4 and A15CR5) to hold gate lamp DS1 on in the same manner as before. The gate lamp is therefore on while the gate is open plus 70 milliseconds; this ensures a

visible flash from the lamp even for short gate open periods. (In MANUAL START or STOP, dc voltages are applied to the base of A15Q1 to force the gate flip-flop to the gate open or gate closed state regardless of other inputs.)

4-70. When A15Q1 of the gate flip-flop is turned on at the end of a measurement, the positive step output at its collector; 1) triggers the transfer one-shot multivibrator at the base of A16Q2; and 2) supplies directly the print command to pin 23 of digital recorder jack on rear panel (this positive pulse tells the digital recorder to accept BCD information from the counter).

4-71. DISPLAY CONTROL A16.

4-72. GENERAL. During a frequency or period measurement, the display control assembly A16 receives the positive transfer trigger pulse from gate control assembly A15; outputs from the display control assembly are a) the gate lamp hold pulse, b) the transfer pulse, c) the reset pulse, and d) the inhibit pulse. Refer to the block diagram, figure 4-14, and schematic diagram figure 5-8 for circuit details.

4-73. GATE LAMP HOLD PULSE. When the gate flip-flop transistor A15Q1 starts to conduct it 1) closes the main gate (paragraph 4-68) and 2) it applies a positive pulse through A16C1 to the base of A16Q2 of the transfer multivibrator A16Q1, Q2. This positive pulse turns A16Q2 off and its collector goes negative and turns on A16Q1. The resulting positive step at collector of A16Q1 is the gate lamp hold pulse and is coupled through A15CR5 to the gate lamp circuit.

4-74. TRANSFER PULSE. As transistor A15Q1 of the gate flip-flop starts to conduct, it 1) closes the main gate (Paragraph 4-68) and 2) applies a positive pulse through A16C1 to the base of A16Q2 of the transfer multivibrator A16Q1, A16Q2. This positive pulse turns A16Q2 off and its collector goes negative and turns on A16Q1. When A16Q1 turns on, its collector goes positive and turns off A16Q3, and it is this negative transition which is the transfer pulse. This negative pulse back-biases the lamp diodes, as described in Paragraph 4-35 and permits transfer of the stored count to the front panel numerical display. The collector of A16Q3 remains negative until A16Q2 turns back on (stable condition) and A16Q1 turns off. As A16Q1 turns off it turns A16Q3 on again and pulls the transfer line positive once more and the information is stored as described in Paragraph 4-35. Resetting the counter manually (RESET BUTTON) forces the transfer multivibrator (A16Q1-A16Q2) to the transfer state by turning A16Q2 off. A zero count is then transferred to the front panel numerical display.

4-75. RESET. Refer to schematic diagram figure 5-8, for circuit details. The positive transfer-triggering pulse from the collector of A15Q1 (which occurs at the time the main gate A3CR9 is closed) drives transfer multivibrator A16Q1, Q2, into its astable condition (Paragraph 4-23). The resulting negative transition at the collector of A16Q2 drives A16Q4 of the sample rate multivibrator A16Q4, Q5 into its astable condition. The length of time that it remains in the astable condition is determined by the charge path A16R16, A16C8 and DISPLAY potentiometer R8. With the use of R8 it is possible to vary the time of the astable condition from 0.2 to 5 seconds. When the DISPLAY control is in the INFINITE position the sample rate multivibrator is held in the astable condition and the front panel display is held indefinitely. As the sample rate multivibrator returns to its stable condition, the collector of A16Q4 goes negative and turns on A16A6, the recovery amplifier. The positive transition from the collector of A16Q6 is differentiated and drives reset amplifier A16Q7 on. The negative output at the collector of A16Q7 is supplied as the reset pulse to the DCA's DDA's and the gate flip-flop. If manual reset occurs during the sample-rate multivibrator cycle, it is quickly returned to its stable state as a result of grounding the base of A16Q4 through A16CR6.

4-76. INHIBIT. When a stop pulse is received at the base of A15Q2 of the gate flip-flop (A15Q1-A15Q2), A15Q2 is turned off and A15Q1 turns on. The positive transition at the collector is coupled through A16C1 to the base of A16Q2 and drives the transfer multivibrator (A16A1-A16Q2) into its astable state (A16Q2 off). The negative transition at the collector of A16Q2 is coupled through A16C5 and A16CR5 to the base of A16Q4 driving the sample rate multivibrator (A16Q4-A16Q5) into its astable state (A16Q4 on). The positive potential at the collector of A16Q4 is coupled through A16CR7 to the base of A15Q4, the inhibit amplifier. This positive potential is the inhibit pulse and while it is present A15Q4 is off and the negative potential at its collector back-biases A15CR2. Thus further pulses at the start channel of the gate flip-flop (A15Q1-A15Q2) through A15CR2 are not accepted until completion of the sample rate multivibrator cycle. As the sample rate multivibrator is returning to its stable condition, it takes about eight milliseconds for the collector of A16Q4 to reach the -15 volts breakdown potential of diode A16CR7. During this time the inhibit pulse is still present and allows the sample rate multivibrator to complete its cycle. When diode A16CR7 breaks down, drive currents through A16R11 are supplied to the base of A15Q4 and it turns on. Its collector is now about 2 volts negative and A15CR2 is no longer back-biased. The gate flip-flop start channel is now uninhibited and will accept the next start pulse.

4-77. POWER SUPPLY A17.

4-78. GENERAL. The power supply A17 supplies all dc voltages needed to operate the ⓗⓟ 5212A/5512A. Included are supplies of -35 volts regulated, and unregulated voltages of -150 and +150 volts. Also coming from assembly A17 are the positive and negative reference voltages for the digital recorder.

4-79. PRIMARY POWER. As shown in the schematic diagram, figure 5-11, either 115- or 230-volt ac power is connected through fuse F1 and front-panel

power switch S7 to the primary of power transformer T1. Switch S8 (slide switch on rear panel) connects the primaries in parallel for 115-volt operation. When switch S8 is in the 230-volt position, the primaries are connected in series. Fan motor B1 is connected across a single primary winding of T1.

4-80. MINUS 35-VOLT SUPPLY. The regulated -35 volt supply consists of a full-wave rectifier (A17CR1 through A17CR4) whose output is smoothed by C4, regulated by Q2, and further filtered by A17C2. Breakdown diode A17CR9 provides a 6.8-volt reference at the emitter of A17Q1. The A17R6-R7-R8 divider supplies a sample of the regulated output to A17Q1 which amplifies and inverts variations in the sample. The output of amplifier A17Q1 controls driver Q1 which in turn controls regulator Q2. Potentiometer A17R7 permits adjustment of the regulated output voltage by providing a means of adjusting A17Q1 bias. The A17R4-A17C1 network provides phase correction for stability during transients.

4-81. REGULATOR OPERATION. Operation may be traced as follows: Suppose the output voltage tends to shift toward -34 volts. This causes the voltage at the base of A17Q1 to go in a positive direction resulting in a decrease of conduction and a negative transition at the collector of A17Q1; driver Q1 increases conduction (Q1 emitter and Q2 base voltage go negative); regulator Q2 increases conduction and returns the output voltage to -35 volts.

4-82. MINUS 150-VOLT AND PLUS 150-VOLT SUPPLIES. A conventional bridge rectifier (A17CR5 through A17CR8) provides 300 volts output made symmetrical with ground to provide +150 volts and -150 volts filtered by C5 and C6.

4-83. DIGITAL RECORDER REFERENCE VOLTAGES. A17R9-R10-R11 make up a voltage divider to supply reference voltages when the counter is used with the ⓗⓟ 562A Digital Recorder or ⓗⓟ 580A/581A Digital to Analog Converter.

SECTION V
MAINTENANCE

5-1. INTRODUCTION.

5-2. This section provides maintenance and service information for the Model 5212A/5512A Electronic Counter. Included are a table of recommended test equipment, troubleshooting procedures, repair and adjustment procedures, and an in-cabinet performance check which may be used to verify proper operation of the counter.

5-3. AIR FILTER.

5-4. Inspect the air filter (center of rear panel) regularly and clean it before it becomes dirty enough to restrict air flow. Proceed as follows:

a. Remove both top and bottom covers from instrument.

b. Remove two screws holding filter in place.

c. Wash filter in solution of warm water and detergent.

d. Remove cleaning solution from filter by shaking. Allow filter to dry completely.

e. DO NOT APPLY ANY COATING COMPOUND TO NON-METAL FILTERS. Coat metal filters with light film of filter oil. We recommend No. 3 Filter Coat from Research Products Company. This adhesive is available in "Handi-Koter" sprayer cans at most heating supply stores or from your Hewlett-Packard field office.

5-5. TEST EQUIPMENT.

5-6. Recommended test equipment for troubleshooting and performance checking is listed in table 5-1. Test instruments other than those listed may be used if their specifications equal or exceed the required characteristics.

5-7. ASSEMBLY CONNECTION IDENTIFICATION.

5-8. Throughout the manual, connections to printed circuit assemblies are referred to in abbreviated form. For example, the connection to pin 15 of assembly A17 is A17(15).

CAUTION

TO AVOID DAMAGE, REMOVE POWER FROM INSTRUMENT BEFORE REMOVING OR REPLACING INSTRUMENT COVERS, ASSEMBLIES, OR COMPONENTS.

5-9. INSTRUMENT COVER REMOVAL.

5-10. To remove top or bottom cover, unscrew and remove the four countersunk phillips-head screws which secure cover to instrument. Then slide cover toward rear of instrument. To replace cover, reverse procedure.

WARNING

115/230 VAC AND ±150 VDC SUPPLY WIRES ARE EXPOSED WHEN EITHER TOP OR BOTTOM INSTRUMENT COVER IS REMOVED. EXERCISE EXTREME CAUTION DURING TROUBLESHOOTING, ADJUSTMENT, OR REPAIR.

5-11. TROUBLESHOOTING AND REPAIR.

5-12. SELF-CHECK. When malfunction is suspected, disconnect all equipment from counter and perform self-check procedure given in figure 3-1. If counter does not self-check properly, see paragraph 5-13. If counter self-checks properly, check that all inputs to counter are within the limits of counter specifications. For example, the input signal may be intermittent or have a small signal-to-noise ratio. Damaged connecting cables may be causing noise or intermittent connections. If malfunction still occurs, cause is internal to counter. Make performance checks, (paragraph 5-28), to help determine source of trouble. Return to paragraph 5-13 for troubleshooting aids.

5-13. TROUBLESHOOTING AIDS. Table 5-2 lists the printed circuit assemblies that are checked during the self-check procedure (figure 3-1), with the corresponding positions of the function switch and the proper front panel display. Table 5-4 gives the reference designations of all printed circuit assemblies used in the counter and their corresponding nomenclatures. Table 5-5 gives information on waveforms which are present when circuits are operating properly. To use table 5-5, first set SENSITIVITY to CHECK, function switch to 10 SEC, EXT-INT to INT, and remove printed circuit assemblies A15 and A16 from counter. If assemblies A1 through A14, and A17, are checked and are operating properly, install A15 and A16, and refer to waveform chart in figure 5-7. Set counter controls as shown above waveform chart.

5-14. MODULE SUBSTITUTION. Maintenance procedures may be greatly simplified if troubleshooting is done by replacing an assembly suspected of malfunction with a spare assembly known to be operating correctly. When malfunctioning assembly is found, trouble then may be traced to the individual components responsible for the malfunction, or the malfunctioning assembly may be shipped to your Hewlett-Packard engineering representative for repair.

5-15. TROUBLESHOOTING OF ASSEMBLIES. Refer to section IV, Principles of Operation, for information on the operation of circuits in a malfunctioning assembly. Consult the component location figures, signal waveforms, and voltages which are included with the assembly schematics at the rear of this

Table 5-1. Recommended Maintenance Test Equipment

Instrument Type	Required Characteristics	Use	Instrument Recommended
Oscilloscope	10-mc bandwidth, dual trace plug-in, ext sync capability	Observe waveforms during troubleshooting and adjustment	hp Model 175A Oscilloscope hp Model 1750A Dual Trace Vertical Amplifier hp AC-21C Voltage Divider Probe (two)
Test Oscillator	Continuously variable from 10 cps to 300 kc, 100 mv output	Performance Check	hp Model 650A Test Oscillator
Low Frequency Generator	Continuously variable from 2 cps to 10 cps, 100 mv output	Performance Check	hp Model 202A Low Frequency Function Generator
Pulse Generator	1 μsec wide, 1 v negative, 1 kc repetition rate	Performance Check	hp Model 212A Pulse Generator
Standard Frequency Source	100 kc sine wave, accuracy of 1 part in 10^7	Check accuracy of counter time base	hp Model 101A 1-MC Oscillator
Variable line voltage source with meter	Variable from 103 to 127 vac (207 to 253 vac)	Performance Check	
DC Voltmeter	0v to ±170v 10M Ω imped ance, 1% accuracy	Troubleshooting and adjustments	hp Model 412A
BNC - T Adapter		Performance Check	hp 1250-0072
Power Supply	0 v to ± 20 v	Performance Check	hp Model 721A

section. Use the printed circuit assembly extention board provided with each instrument to obtain easy access to assembly circuits during operation.

5-16. PRINTED CIRCUIT COMPONENT REPLACEMENT. Component lead-holes in the Model 5212A/5512A circuit boards have plated walls to ensure good electrical contact between conductors on the opposite sides of the board. To prevent damage to this plating and to the replacement component, apply heat sparingly and work carefully. The following replacement procedure is recommended:

a. Remove defective component.

b. Melt solder in component lead-holes. Use clean dry soldering iron to remove excess solder. Clean holes with toothpick or wooden splinter. Do not use metal tool for cleaning as this may damage through-hole plating.

c. Bend leads of replacement component to the correct shape and insert component leads into component lead-holes. Using heat and solder sparingly, solder leads in place. Heat may be applied to either side of board. A heat sink (longnose pliers, commercial heat-sink tweezers, etc) should be used when replacing transistors and diodes in order to prevent excessive heat from being conducted by the leads from the soldering iron to the component.

d. Through-hole plating breaks are indicated by the separation from the board of the round conductor-pad on either side of the board. To repair breaks, press conductor-pads against board and solder replacement component lead to conductor-pad on both sides of the board.

5-17. ADJUSTMENTS.

5-18. POWER SUPPLY.

a. Set line voltage to normal value (115 or 230 vac).

b. Connect dc voltmeter (see table 5-1) to A17(15).

c. Voltmeter should read -35 vdc ±1 vdc. If voltage is outside of this range, adjust A17R7 (-35 volt adjust; see figure 5-1 or 5-2) to obtain -35 vdc.

d. Vary line voltage from 103 to 127 vac (207 to 253 vac). The -35 vdc supply should not vary more than 0.5 vdc.

e. Check all supply voltages at locations, and under conditions shown in table 5-3. Note that only the -35 vdc supply is adjustable.

Table 5-2. Self-Check Troubleshooting Aid

Circuits Checked During Self-Check Procedure (see figure 3-1)																		
		Assemblies Being Checked																
Function Switch Position	Display	A1	A2	A3	A4	A5	A6	A7	A8 *	A9	A10	A11	A12	A13	A14	A15	A16	A17
1 period	000.01	x	x						x							x	x	x
10	00.010	x	x	x					x	x						x	x	x
100	0.0100	x	x	x	x				x	x	x					x	x	x
1K	010.00	x	x	x	x	x			x	x	x	x				x	x	x
10K	10.000	x	x	x	x	x	x		x	x	x	x	x			x	x	x
100K	0.0000	x	x	x	x	x	x	x	x	x	x	x	x	x		x	x	x
.01 sec	0010.0	x	x	x	x				x	x	x	x				x	x	x
.1	010.00	x	x	x	x	x			x	x	x	x	x			x	x	x
1.	10.000	x	x	x	x	x	x		x	x	x	x	x	x		x	x	x
10.	0.0000	x	x	x	x	x	x	x	x	x	x	x	x	x	x	x	x	x
Manual Start	Continuous 10 cps Counting	x	x	**	**	**	**	**	x	x	x	x	x			x	x	x
Manual Stop	Continuous display of last count of manual start															x	x	x

* Only circuit operation checked; not accuracy or stability

**Depends on length of time in this position

Table 5-3. Power Supply Voltage

Test Point	Line Voltage			Adjustment
	103	115	127	
A17(15)	-35±1	-35±1	-35±1	A17R7
	Ripple + noise < .2 v p/p			
A17(3)	-135±10	-150±10	-165±10	None
A17(14)	+135±10	+150±10	+165±10	None
A17(12)	-26.5±1	-26.5±1	-26.5±1	None
A17(13)	-2.5±0.5	-2.5±0.5	-2.5±0.5	None

5-19. INPUT SCHMITT TRIGGER.

5-20. Paragraphs 5-21 and 5-22 are procedures to test input Schmitt trigger assembly A2 for proper operation. If any test is not passed, see paragraph 5-23 or 5-24 for trigger adjustment procedure.

5-21. 10 CPS TO 300 KC CHECK.

a. Connect test oscillator to INPUT of counter. Set oscillator output to 10 cps, 100 mv.

b. Connect oscilloscope to output of A2. Oscilloscope display should be a rectangular wave, approximately 40% positive and 60% negative.

c. Sweep frequency of test oscillator from 10 cps to 300 kc.

d. Oscilloscope display should remain a jitter-free rectangular wave at any frequency between 10 cps and 300 kc.

5-22. 2 CPS TO 10 CPS CHECK.

a. Disconnect test oscillator and connect low frequency generator. Set generator output to 2- cps, 100-mv rms sine wave.

b. Sweep frequency of generator from 2 cps to 10 cps.

Table 5-4. Assembly Designations

A1	AMPLIFIER ASSEMBLY (INPUT)
A2	TRIGGER ASSEMBLY (INPUT, SCHMITT)
A3	DECIMAL COUNTER ASSEMBLY (1's)
A4	DECIMAL COUNTER ASSEMBLY (10's)
A5	DECIMAL COUNTER ASSEMBLY (100's)
A6	DECIMAL COUNTER ASSEMBLY (1,000's)
A7	DECIMAL COUNTER ASSEMBLY (10,000's)
A8	OSCILLATOR ASSEMBLY (TIME BASE)
A9	DECADE DIVIDER ASSEMBLY (100 kc to 10 kc)
A10	DECADE DIVIDER ASSEMBLY (10 kc to 1 kc)
A11	DECADE DIVIDER ASSEMBLY (1 kc to 100 cps)
A12	DECADE DIVIDER ASSEMBLY (100 cps to 10 cps)
A13	DECADE DIVIDER ASSEMBLY (10 cps to 1 cps)
A14	DECADE DIVIDER ASSEMBLY (1 cps to 0.1 cps)
A15	GATE CONTROL ASSEMBLY
A16	DISPLAY CONTROL ASSEMBLY
A17	POWER SUPPLY ASSEMBLY

c. Oscilloscope display should remain a jitter-free rectangular wave at any frequency between 2 cps and 10 cps.

5-23. ADJUSTMENT FOR SINE WAVE OPERATION.

a. Set SENSITIVITY control clockwise.

b. Connect 100-kc sine wave, 100-mv rms, to INPUT.

c. Turn A2R3 (trigger level adjust; see Figure 5-4) fully clockwise.

d. Turn A2R3 slowly counterclockwise until output of A3, as observed on the oscilloscope, is a stable rectangular waveform, approximately 40% positive and 60% negative.

e. Repeat procedures in Paragraphs 5-21 and 5-22 readjusting as necessary.

5-24. ADJUSTMENT FOR PULSE OPERATION.

Note

Optimum adjustment for pulse operation will differ from optimum sine wave adjustment. Use this adjustment only for pulse operation. Input Schmitt Trigger may be adjusted for either positive or negative pulse operation.

a. Connect Pulse Generator set for 1 μsec, 1 volt pulses of desired polarity with repetition rate of 1 kc. (Connect Generator with normal recommended load.)

b. Connect Oscilloscope to output of A2.

c. Adjust A2R3 until a stable 1 μsec pulse is displayed.

5-25. TIME BASE OSCILLATOR.

5-26. QUICK ACCURACY CHECK.

a. Connect a 100-kc signal from a standard frequency source to INPUT of counter.

b. Adjust counter controls (see figure 3-3) to measure the frequency of the standard signal using the 1-second gate time.

c. Counter should display 00.000 kc (1 at left of number not displayed) if counter time base oscillator and 100-kc standard are at same frequency. Difference between counter reading and 100-kc standard is the frequency offset of counter time base oscillator in parts in 10^6.

d. If offset is excessive for your applications, proceed with oscillator adjustment.

5-27. FREQUENCY ADJUSTMENT.

a. Set function switch to MANUAL START.

b. Set EXT-INT switch (on rear panel) to INT.

c. Connect oscilloscope to J2, STD BNC connector on rear panel.

d. Trigger oscilloscope externally with 100-kc signal from standard frequency source.

e. Set oscilloscope sweep time to 1 μsec/cm. Adjust oscilloscope controls to obtain a presentation of a rectangular wave, approximately 24 v p/p.

f. Using a plastic tool, adjust C3, OSC FREQ (oscillator frequency adjustment on rear panel), to stop any horizontal drift of the oscilloscope display. Drift of display in cm/sec is difference between standard frequency and the time-base oscillator frequency in parts in 10^6.

5-28. IN-CABINET PERFORMANCE CHECK.

5-29. GENERAL. The following performance check, Table 5-6 and Test Card, verifies proper operation of all circuits in the Model 5212A/5512A Electronic

Table 5-5. Troubleshooting Aid

To use this table, set:	function switch . . . . . 10 SEC SENSITIVITY . . . . . CHECK EXT-INT . . . . . INT	DISPLAY maximum ccw Remove A15 and A16 from counter		
To Check	Connect Oscilloscope to	Shape	Proper Indication Frequency	Approximate Amplitude v p/p
Time Base A8	A8(6)		100 kc	24
Decade Divider Assembly				
A9	A9(5)		10 kc	24
A10	A10(5)		1 kc	24
A11	A11(5)	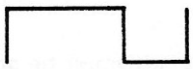	100 cps	24
A12	A12(5)		10 cps	24
A13	A13(5)		1 cps	24
A14	A14(5)		0.1 cps	24
Input Amplifier and Schmitt Trigger A1 A2	A3(7)		10 kc	30
Decimal Counter Assembly				
A3	A3(10)		10 kc	29
A4	A4(10)		100 cps	29
A5	A5(10)		10 cps	29
A6	A6(10)		1 cps	29
A7	A7(10)		0.1 cps	29
Gate Control Assembly A15 Display Control Assembly A16	See waveforms on figure 5-7, waveform chart			

Counter and may be used:

a. as part of an incoming inspection check of instrument specifications.

b. periodically, for instruments used in systems where maximum reliability is of utmost importance,

c. as part of a troubleshooting procedure to locate malfunctioning circuits, and

d. after any repairs or adjustments, before returning instrument to regular service.

5-30. VARIABLE LINE VOLTAGE. During the following tests, counter should be connected to power source through a variable voltage device so that line voltage may be varied ±10% from nominal (115 or 230 vac) to assure proper operation of counter under various supply conditions.

Table 5-6. In-Cabinet Performance Check

1. MAXIMUM COUNTING RATE: 300 KC

a. Set Counter Controls as follows:

SENSITIVITY . . . . . counterclockwise, not in CHECK
DISPLAY. . . . . maximum ccw
POWER switch . . . . . ON

b. Connect output of Low Frequency Generator to INPUT connector of Counter and to input of Oscilloscope with a BNC "T" connector. The Oscilloscope is used to monitor input signal level. Set Low Frequency Generator for 0.1 v rms (0.28 v p-p) signal input.

c. Vary frequency of Low Frequency Oscillator from 2 cps to 10 cps, keeping output constant at 0.1 v rms (0.28 v p-p). Adjust counter SENSITIVITY to trigger on input signal. Counter should properly display frequencies within this range.

d. Substitute Test Oscillator for Low Frequency Generator. Vary frequency of Test Oscillator from 10 cps to 300 Kc keeping output constant at 0.1 v rms (0.28 v p-p). Adjust Counter SENSITIVITY to trigger on input signal. The Counter should display frequencies in this range. Record frequency range steps c and d on test card.

e. To measure pulses, the input trigger circuit must be adjusted so that the hysteresis limits will be triggered by either a positive pulse or a negative pulse. Refer to Paragraph 5-14 for this internal adjustment.

Note

Shifts in hysteresis limits to obtain a consistent count on a positive or negative pulse will affect sine wave sensitivity. Steps d and e above will require an input signal level above .1 v rms if the input circuit is adjusted for pulse operation.

f. Perform following check only if trigger circuit has been adjusted for pulse operation. Connect Pulse Generator to INPUT connector of Counter with normal recommended load. Set Pulse Generator for 1 μsec, 1 volt pulse of the polarity used to adjust the trigger bias with a 500 pps repetition rate. The Counter should display 500 cycles.

2. INPUT SENSITIVITY: 0.1 v rms sine wave.

Note: Internal control allows selection of either a positive or a negative pulse as the input.

a. The sensitivity is checked by procedure 1 maximum Counting Rate Check.

3. TIME BASE FREQUENCY: 100 Kc

STABILITY: Aging Rate : < 2 parts in 10^6/week
As a Function of Temperature: < ± 20 parts in 10^6 (+15°C to +35°C)
± 100 parts in 10^6 (+20°C to +65°C)
As a Function of Line Voltage (± 10%): < 1 part in 10^6.

a. Connect a 100 Kc signal from a standard frequency source to the INPUT connector of Counter.

b. Adjust Counter controls (see Figure 3-3) to measure the frequency of the standard signal using the 1-second gate time.

c. A Counter display of 00.000 Kc (1 at left of number not displayed) indicates Counter time base oscillator and 100 Kc standard are at the same frequency. Difference between Counter reading and 100 Kc standard is the frequency offset of Counter time base oscillator in parts in 10^6.

d. Record frequency difference determined in step c. For long-term stability this test should be made daily for a period of one week.

Note: Temperature must be kept constant, or compensation for temperature difference must be made whenever a frequency difference is recorded. Unless a record of the temperature and date of last calibration is available, the frequency offset should not be considered drift or aging rate of the 100 Kc crystal.

Table 5-6. In-Cabinet Performance Check (continued)

3. TIME BASE FREQUENCY (continued)

e. Vary line voltage ± 10% and record frequency difference on test card.

Note: Stability as a function of temperature may be checked by performing steps f and g.

f. Vary operating temperature from +15°C to +35°C and record frequency difference.

g. Vary operating temperature from -20°C to +65°C.

4. TIME BASE EXTERNAL INPUT:
SENSITIVITY: 1 v rms into 1000 ohms
RANGE: 100 cps to 300 Kc, sine wave.

a. Set Counter as follows:
EXT INT. . . . . EXT
FUNCTION . . . . . PERIODS 10 K
DISPLAY . . . . . maximum ccw
Power Switch . . . . . ON

b. Connect output of Test Oscillator to front panel INPUT connector and to rear panel STD connector (J2) with a BNC "T" connector. Set Test Oscillator output for 1 v rms (2.8 v peak-to-peak).

c. Vary frequency of Test Oscillator from 100 cps to 300 kc, keeping output constant at 1 volt rms. Counter should display 10,000 ± 1 count at any frequency in this range. Reduce Test Oscillator output level to the lowest level the Counter will count, and record on test card the level and frequency range.

5. TIME BASE OUTPUT: 100 KC; > 1 v peak-to-peak @ 1000 ohms.

a. Set Counter controls as follows:
EXT INT . . . . . INT
Power Switch . . . . . ON

b. Connect oscilloscope to rear panel STD Jack (J2).

c. The oscilloscope should display a 100 Kc nonsinusoidal wave of 1 volt peak-to-peak. Record on test card the frequency and amplitude of oscillator output.

6. BCD OUTPUT: Output 4-line 1-2-2-4 BCD: Impedance: 100K each line
"0" State Level = -28 v
"1" State Level = -2 v

a. The impedance is determined by a fixed value 100K resistor, which can be seen in schematic diagrams Figures 5-9 and 5-10.

b. Set Counter controls as follows:
DISPLAY . . . . . maximum ccw
FUNCTION . . . . . FREQUENCY .1 SEC
Power Switch. . . . . ON

c. Connect Test Oscillator to INPUT connector of Counter, and set as shown below:

d. Connect Oscilloscope to following pins to verify "0" state and "1" state levels. Oscilloscope will display switching from the "0" state (-28 volts) to "1" state (-2 volts). Mark test card OK.

DIGITAL RECORDER J4 Pins

1	First DCA A3	3	Second DCA A4
2	Test Oscillator 30 cps (@ 1 v rms)	4	Test Oscillator 300 cps (@1 v rms)
26		28	
27		29	

Table 5-6. In-Cabinet Performance Check (continued)

6. BCD OUTPUT: (continued)

DIGITAL RECORDER J4 Pins

5		7	
6	Third DCA A5	8	Fourth DCA A6
30	Test Oscillator 3 Kc (@ 1 v rms)	32	Test Oscillator 30 Kc (@ 1 v rms)
31		33	

9	
10	Fifth DCA A7
34	Test Oscillator 300 Kc (@ 1 v rms)
35	

7. BCD OUTPUT: Reference Levels: Approximately -2.4 v, 350-ohm source impedance; and approximately -26.9 v, 1000-ohm source impedance.

a. Set Counter power switch ON.

b. Connect DC Voltmeter to DIGITAL RECORDER jack J4 pin 25 to check positive reference (-2.4 v) and pin 24 to check negative reference (-26.9 v). Record amplitude of both reference voltages on test card.

8. BCD OUTPUT: Print Command: step from -29 v to -1 v, from 2700 ohm source in series with 1000 pf.

a. Connect Oscilloscope to DIGITAL RECORDER jack J4 pin 23.

b. Set Counter controls as follows:

DISPLAY	maximum ccw
FUNCTION	FREQUENCY 1 SEC
SENSITIVITY	CHECK
Power Switch	ON

c. The Oscilloscope should display the print command step (+28 volts or greater) for each counting cycle. Record the amplitude of this positive step on the test card.

9. BCD OUTPUT: Hold-off Requirements: any voltage from chassis ground to +12 volts maximum.

a. Set Counter controls as follows:

DISPLAY	maximum ccw
FUNCTION	FREQUENCY 1 SEC
SENSITIVITY.	CHECK
STORAGE (on rear panel) .	non-STORAGE
Power Switch	ON

b. Apply hold-off by shorting DITITAL RECORDER jack J4, pin 22 of rear panel, to ground. The Counter should complete the counting cycle being made and then stop until the hold-off connection is removed from J4 pin 22. Record on test card.

c. Repeat step b, using +12 volts hold-off voltage from dc power supply. Record hold-off voltage on test card. Note this check can be made using any hold-off voltage from 0 volts (ground) to +12 volts.

PERFORMANCE CHECK TEST CARD

Hewlett-Packard Model 5212A/5512A
Electronic Counter
Serial No. ___ - _____

Tests performed by _____
Date _____

Description	Check	
1. MAXIMUM COUNTING RATE: 300 Kc	☐	2 cps to 300 Kc minimum
2. INPUT SENSITIVITY: 0.1 v rms sine wave	☐	0.1 v rms (verified by maximum counting rate check
3. TIME BASE:		
Frequency (internal): 100 Kc	☐	parts in 10^6 (frequency offset at beginning of test)
Stability: Aging Rate: less than 2 parts in 10^6 / week	☐	parts in 10^6 (frequency offset one week later at same temperature)
	☐	less than ± 2 parts in 10^6 (stability)
As a function of line voltage (± 10%): less than 1 part in 10^6.	☐	less than ± 1 part in 10^6 (± 10% line voltage)
4. TIME BASE: External Input:	STD JACK J2	
Sensitivity: 1 v rms into 1000 ohms	☐	1 v rms or less
Range: 100 cps to 300 Kc, sine wave	☐	100 cps to 300 Kc minimum
5. TIME BASE OUTPUT:	STD JACK J2	
greater than 1 v peak-to-peak ± @ 1000 ohms	☐	100 Kc
	☐	1 v peak-to-peak or greater
6. BCD OUTPUT: Output 4-line 1-2-2-4 BCD	DIGITAL RECORDER JACK (J4) BCD OUTPUT	
"0" State Level: = -28 v	☐	"0" state, approx. -28 v
"1" State Level: = -2 v	☐	"1" state, approx. -2 v
7. BCD OUTPUT:	DIGITAL RECORDER JACK (J4) PINS 25 and 24	
Reference Levels: approx. -2.4 v 350 ohms source impedance, and approx. -26.9 v, 1000 ohm source impedance	☐	approximately -2.4 volts
	☐	approximately -26.9 volts
8. BCD OUTPUT:	DIGITAL RECORDER JACK (J4) PIN 23	
Print command: step from -29 volts to -1 volt from 2700 ohm source in series with 1000 pf.	☐	positive step 28 volts
9. BCD OUTPUT	DIGITAL RECORDER JACK (J4) PIN 22	
Hold-off requirements: chassis ground to +12 v maximum	☐	chassis ground
	☐	+12 volts

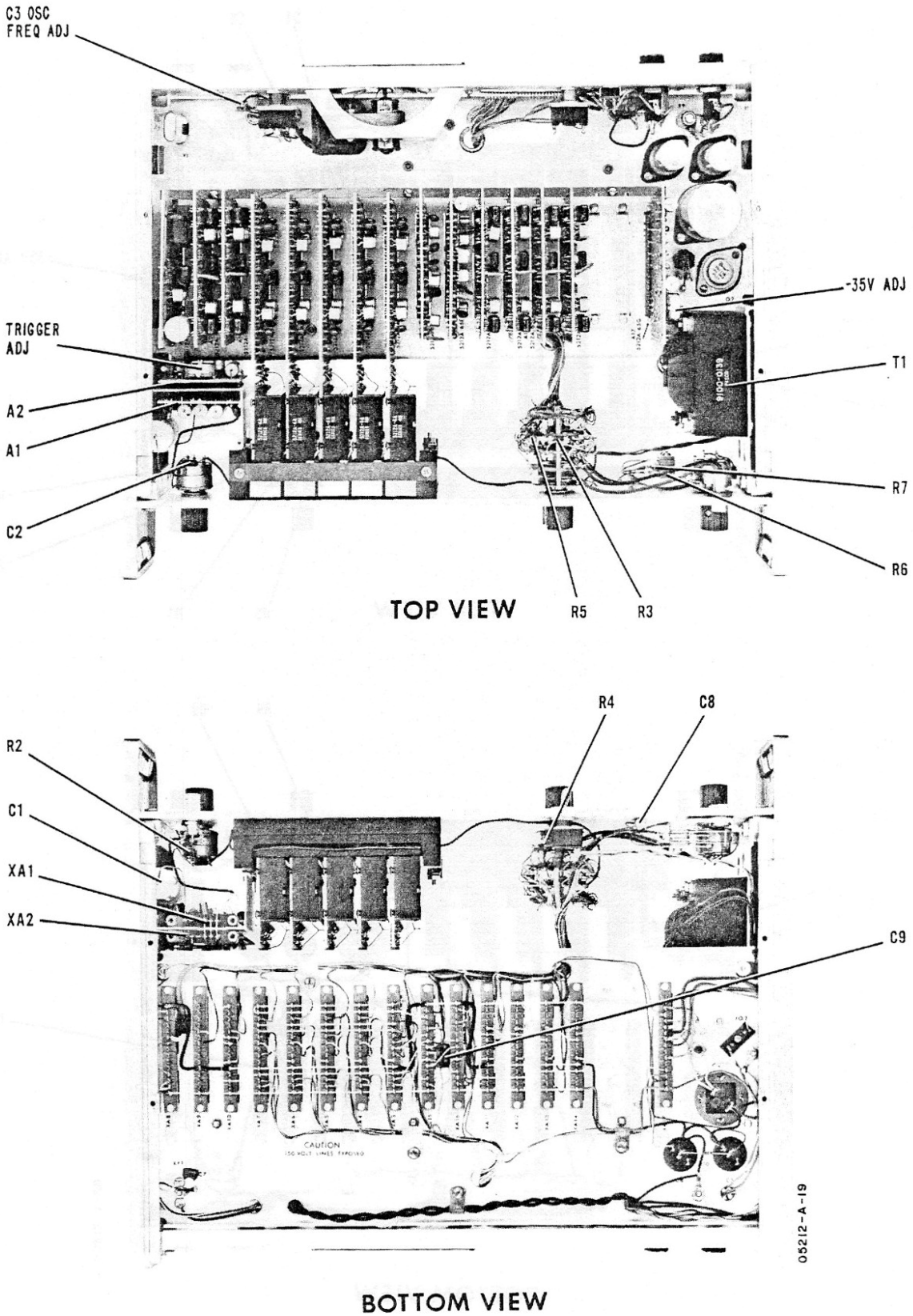

Figure 5-1. 5212A Component Location

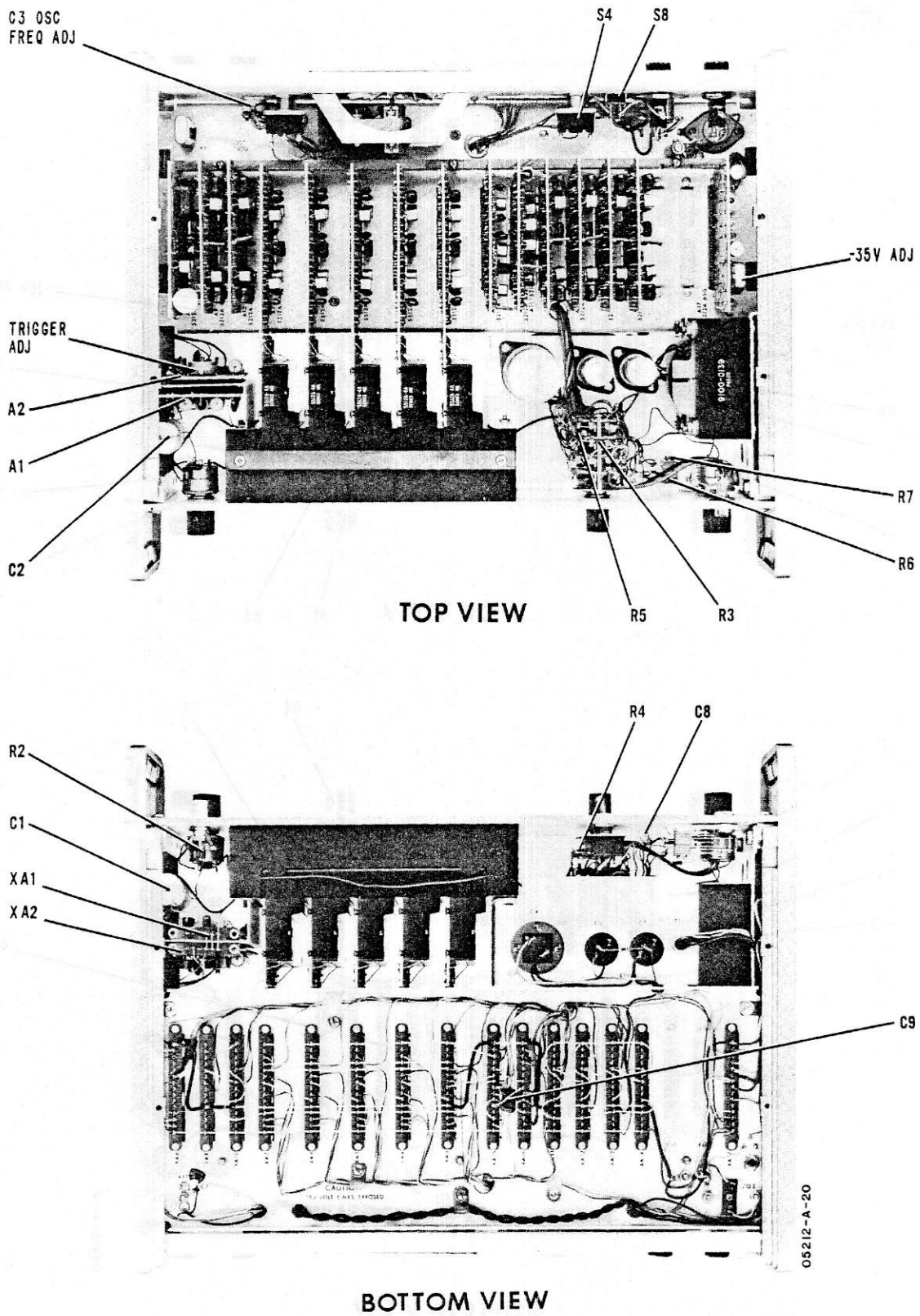

Figure 5-2. 5512A Component Location

SYMBOLS

- FRONT PANEL
- REAR PANEL
- KNOB CONTROL
- SCREWDRIVER ADJUST
- MAIN SIGNAL PATH
- FEEDBACK PATH
- CONDUCTING ELEMENT
- CW — WIPER MOVES TOWARD "CW" WHEN CONTROL IS ROTATED CLOCKWISE
- POWER LINE GROUND
- CIRCUIT COMMON GROUND
- 8 — TEST POINT
- A — "AND" GATE
- I — INHIBIT GATE
- O — "OR" GATE

WAVEFORMS SHOWN ARE TYPICAL

SWITCH DESIGNATIONS

A3S1BR(2-1/2)

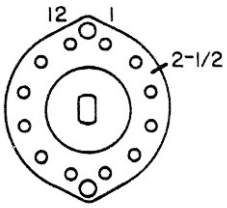

A3S1 SWITCH S1 WITHIN ASSEMBLY A3

B 2ND WAFER FROM FRONT (A=1ST, ETC)

R REAR OF WAFER (F=FRONT)

(2-1/2) TERMINAL LOCATION ($2\frac{1}{2}$) (VIEWED FROM FRONT)

REFERENCE DESIGNATIONS

REFERENCE DESIGNATIONS WITHIN ASSEMBLIES ARE ABBREVIATED. ADD ASSEMBLY NUMBER TO ABBREVIATION FOR COMPLETE DESCRIPTION.

ASSEMBLY	ABBREVIATION	COMPLETE DESCRIPTION
A25	C1	A25C1
A25A1	CR1	A25A1CR1
NO PREFIX	J3	J3

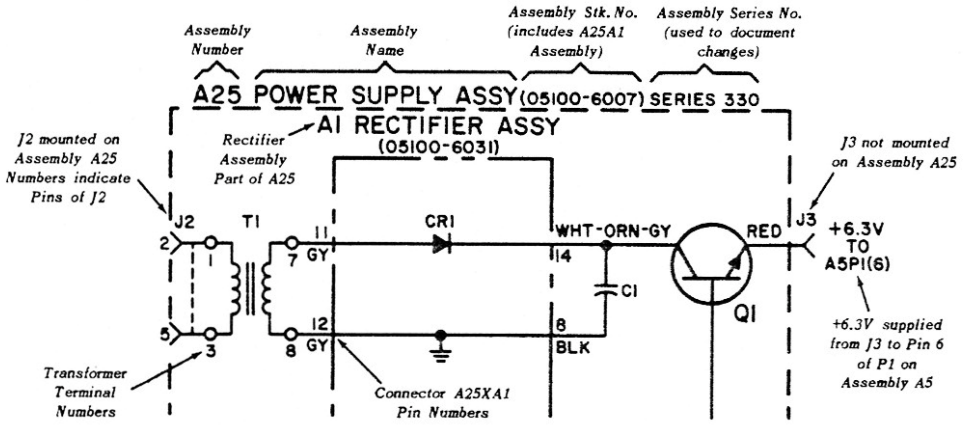

00000-B-20

Schematic Diagram Notes

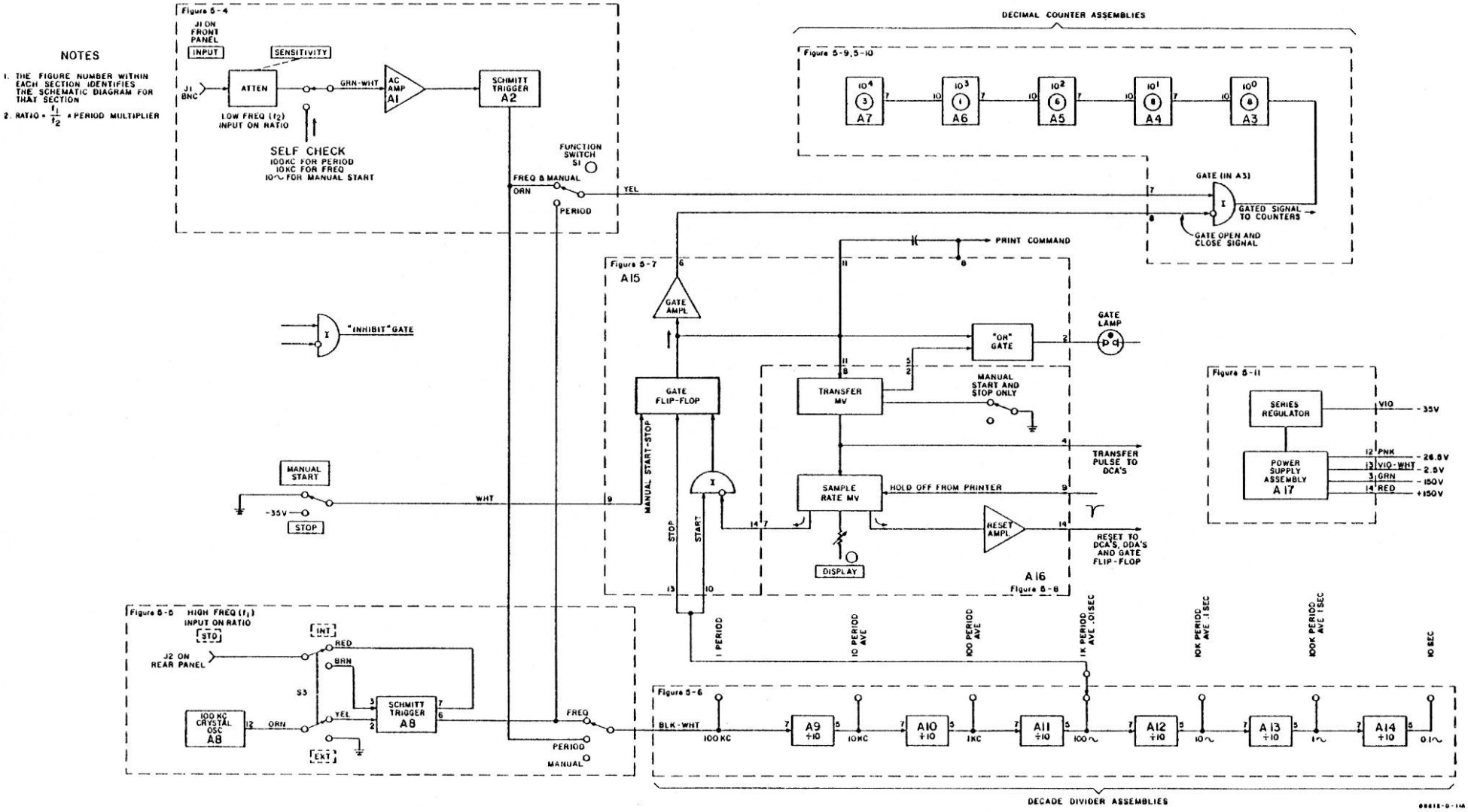

Figure 5-3. Functional Block Diagram

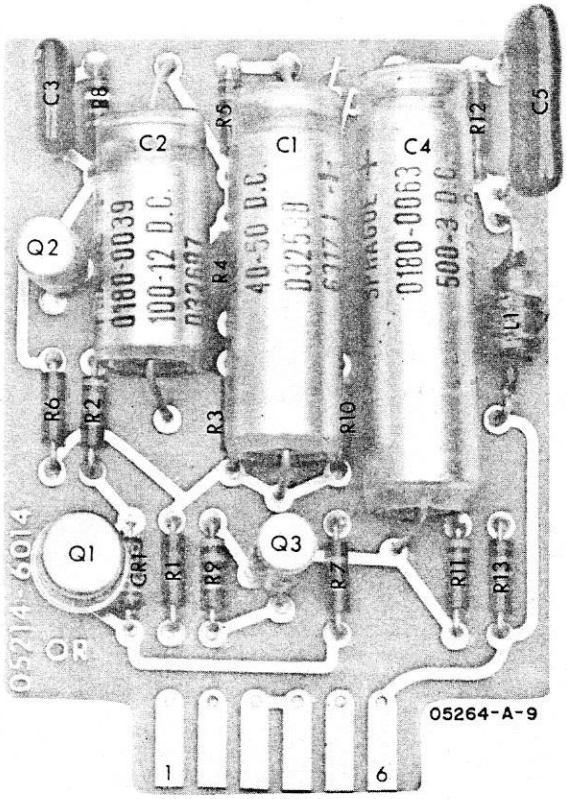
C3
R8
C2
R5
C1
C4
R12
C5
Q2
0180-0039
100-12 D.C.
40-50 D.C.
0180-0063
500-3 D.C.
R4
R6
R2
R3
R10
L1
Q1
Q3
R1
R9
R7
R11
R13
05214-6014
OR
05264-A-9
1
6

A1

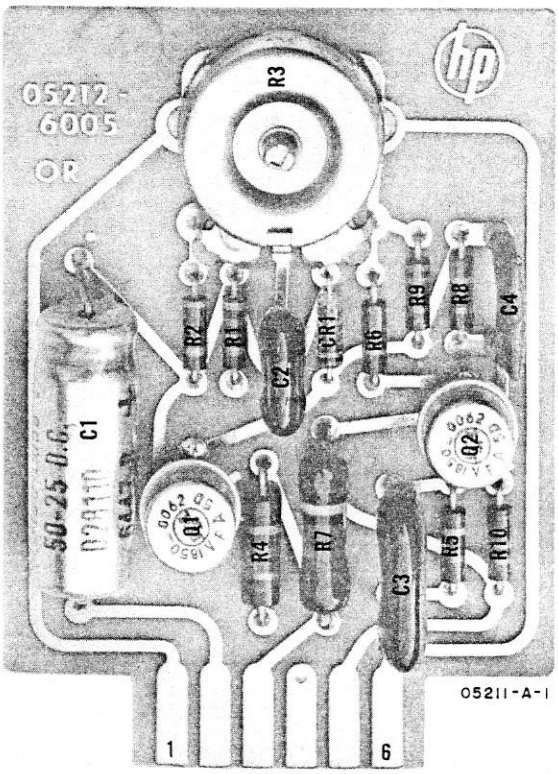
05212-
6005
OR
R3
R7
R1
C2
CR1
R6
R9
R8
C4
C1
Q1
Q2
R4
R7
C3
R5
R10
05211-A-1
1
6

A2

NOTES

1. REFERENCE DESIGNATIONS WITHIN THIS ASSEMBLY ARE ABBREVIATED. ADD ASSEMBLY DESIGNATION AS PREFIX TO FORM COMPLETE DESIGNATION

2. UNLESS OTHERWISE INDICATED:
   RESISTANCE IN OHMS;
   CAPACITANCE IN PICOFARADS

3. FOR TRIGGER LEVEL ADJUSTMENT SEE PARAGRAPHS 5-19 THRU 5-24

REFERENCE DESIGNATIONS

NO PREFIX	A1	A2
C1, 2	C1-C5	C1-C4
	CR1	CR1
J1		
	L1	
	Q1-Q3	Q1-Q2
R1-R4	R1-R13	R1-R10
S1, 2		

05212-D-14A

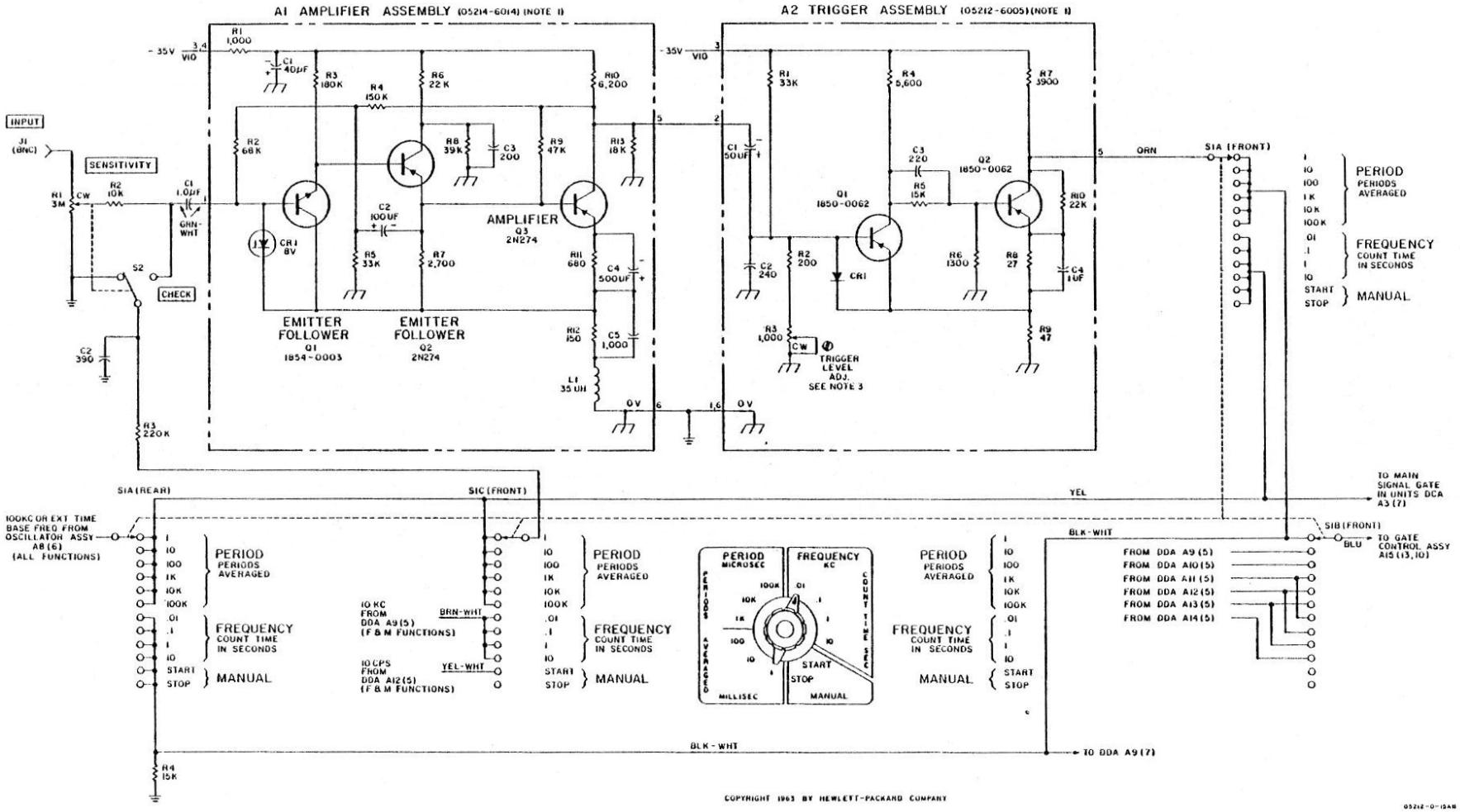

Figure 5-4. Amplifier Assembly A1 & Trigger Assembly A2

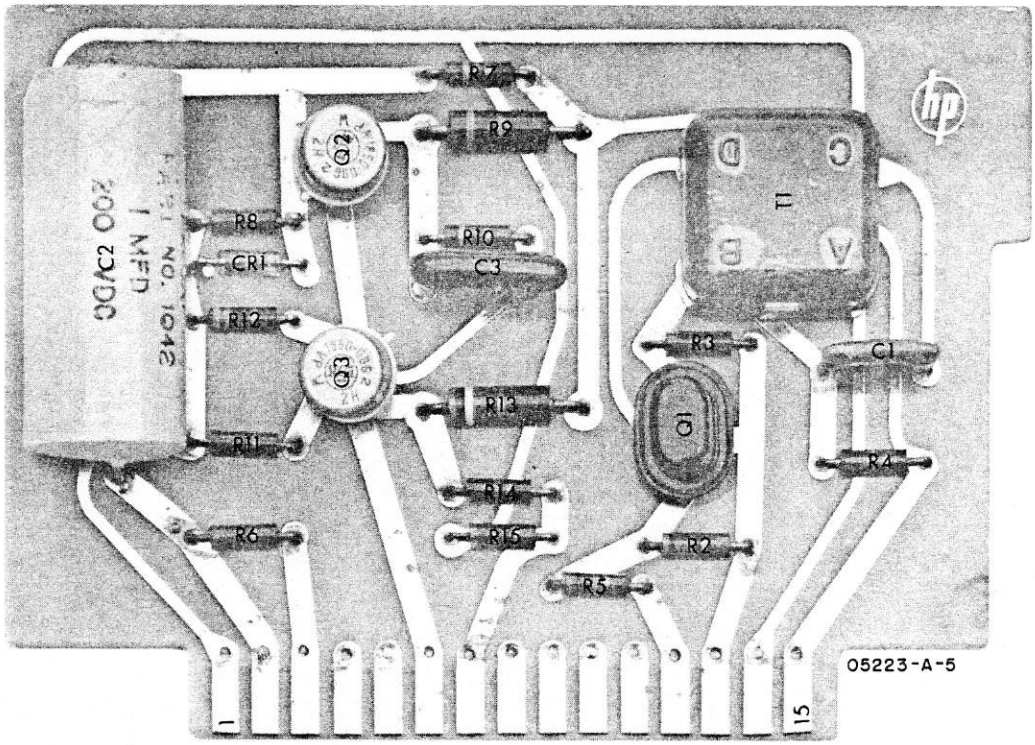
R7
R9
Q2
R8
CR1
R10
C3
T1
R12
Q3
R3
C1
R13
Q1
R11
R4
R14
R6
R15
R2
R5
05223-A-5
1
15

A8

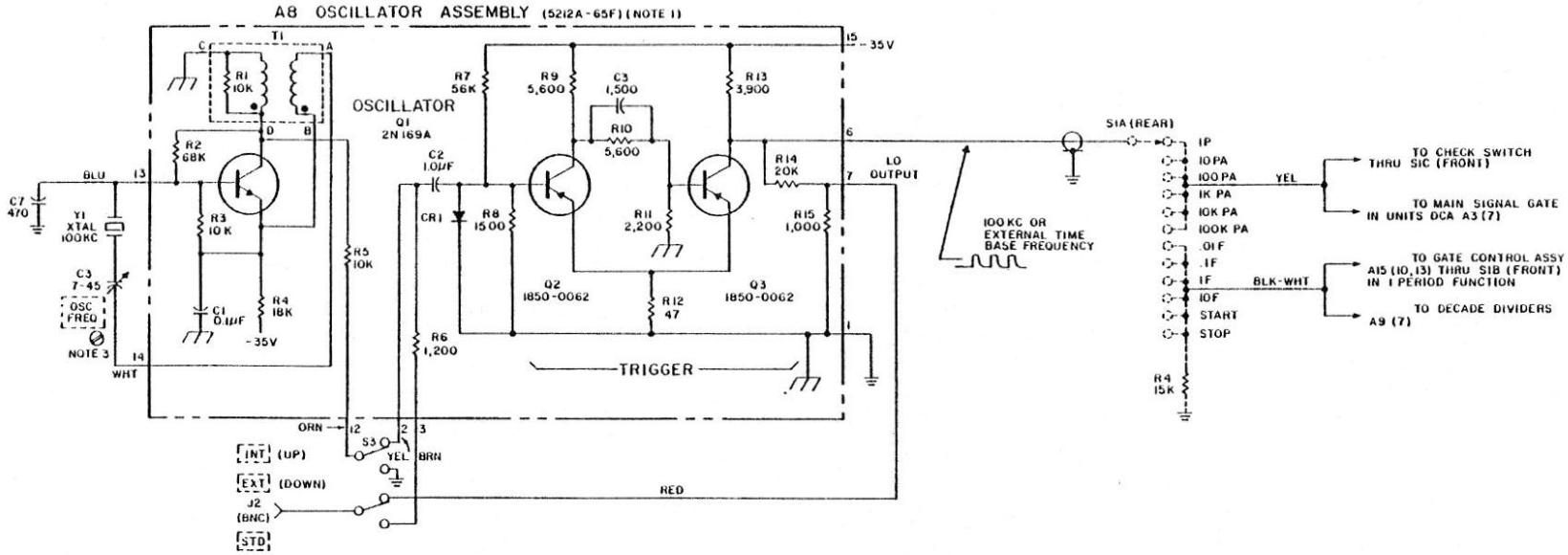

NOTES

1. REFERENCE DESIGNATIONS WITHIN THIS ASSEMBLY ARE ABBREVIATED. ADD ASSEMBLY DESIGNATION AS PREFIX TO FORM COMPLETE DESIGNATION
2. UNLESS OTHERWISE INDICATED:
   RESISTANCE IN OHMS
   CAPACITANCE IN PICOFARADS
3. FOR OSCILLATOR FREQUENCY ADJUSTMENT SEE PARAGRAPHS 5-25 THRU 5-27

REFERENCE DESIGNATIONS

NO PREFIX	A8
C3,7	C1-3
	CR1
J2	
	Q1-3
	R1-15
S3	
	T1
Y1	

05212-D-6A8

Figure 5-5. Oscillator Assembly A8

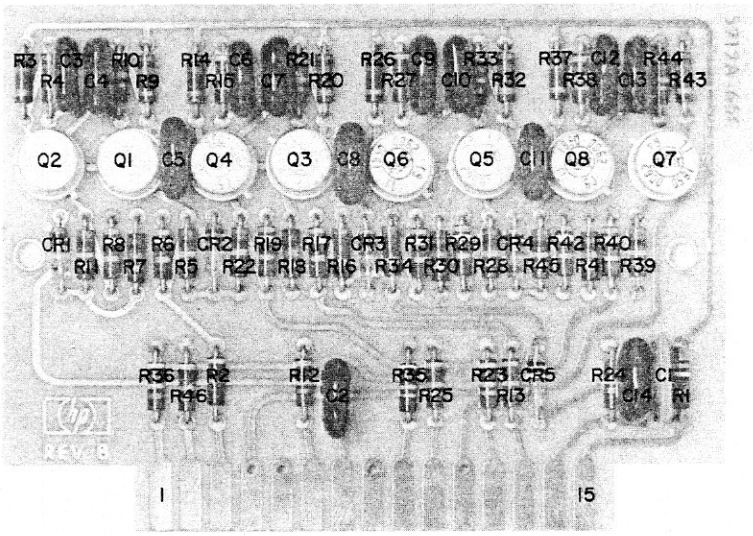
R3 C3 R10 R14 C6 R21 R26 C9 R33 R37 C12 R44
R4 C4 R9 R15 C7 R20 R27 C10 R32 R38 C13 R43
Q2 Q1 C5 Q4 Q3 C8 Q6 Q5 C11 Q8 Q7
CR1 R8 R6 CR2 R19 R17 CR3 R31 R29 CR4 R42 R40
R11 R7 R5 R22 R18 R16 R34 R30 R28 R45 R41 R39
R36 R2 R12 R35 R23 CR5 R24 C1
R46 C2 R25 R13 C14 R1
REV-B
1
15

A9-A14

WAVEFORMS

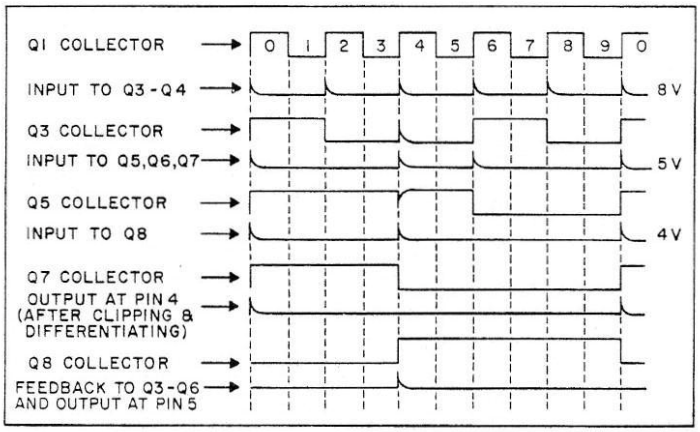

NOTES

1. REFERENCE DESIGNATIONS WITHIN THIS ASSEMBLY ARE ABBREVIATED. ADD ASSEMBLY DESIGNATION AS PREFIX TO FORM COMPLETE DESIGNATION

2. UNLESS OTHERWISE INDICATED:
   RESISTANCE IN OHMS;
   CAPACITANCE IN PICOFARADS

RESET WIRING

RESET NUMERAL	RESET PULSE (NEGATIVE) PIN CONNECTIONS			
0	3	13	10	1
1	6	13	10	1
2	3	12	10	1
3	6	12	10	1
4	3	12	10	2
5	6	12	10	2
6	3	13	9	2
7	6	13	9	2
8	3	12	9	2
9	6	12	9	2

REFERENCE DESIGNATIONS

A9 – A14
C1 – 14 CR1 – 5 Q1 – 8 R1 – 46

05212-D-1A

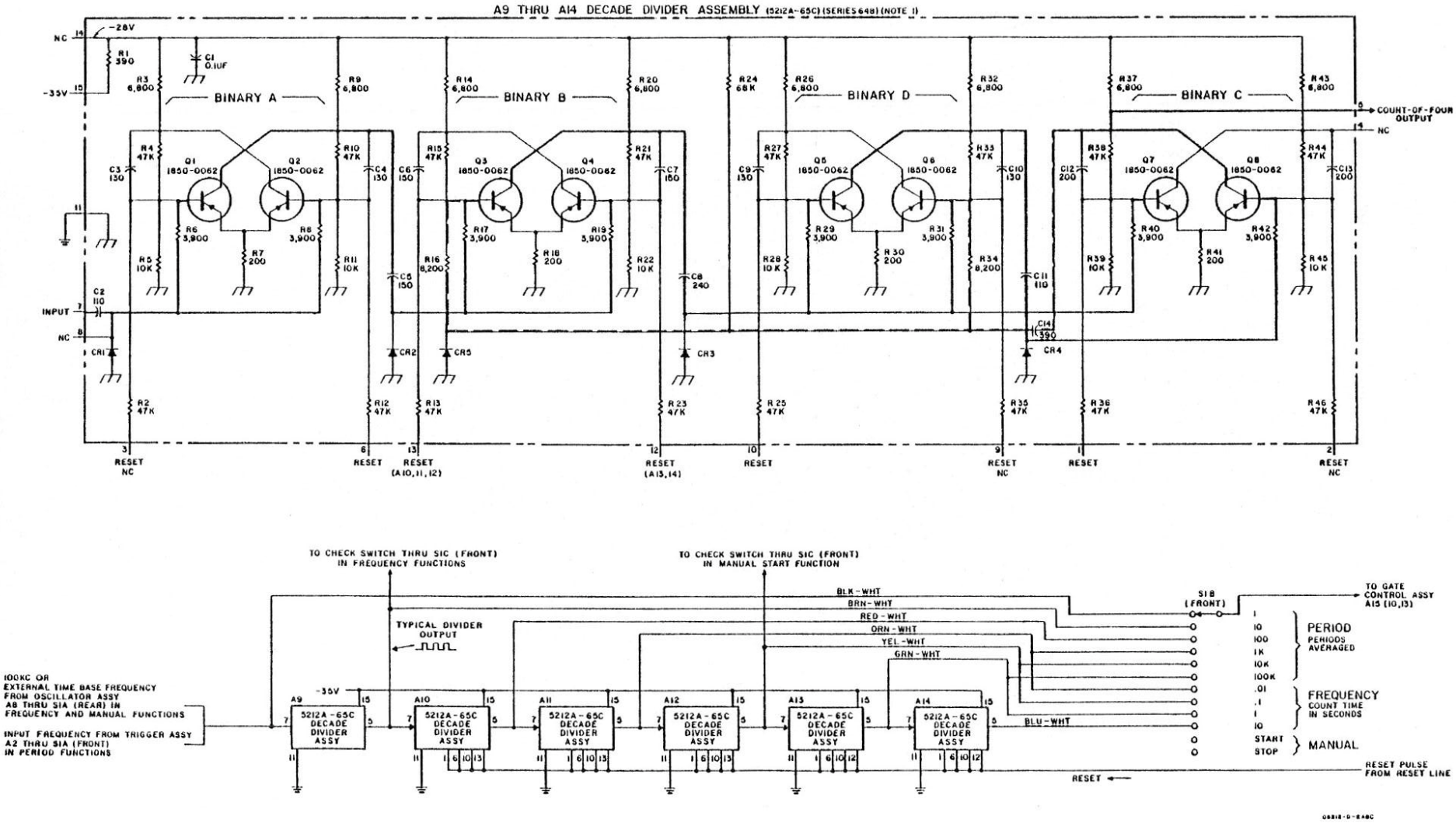

Figure 5-6. Decade Divider Assemblies A9 through A14

WAVEFORM CHART

FUNCTION SWITCH: 0.1 SEC GATE.
INPUT SWITCH: CHECK.
DISPLAY CONTROL: MINIMUM (CCW).
OSCILLOSCOPE SYNC: FROM A15 (12).
OSCILLOSCOPE TRIGGERING: NEG SLOPE, NEG LEVEL.
VERTICAL ARROWS INDICATE SIGNAL FLOW.

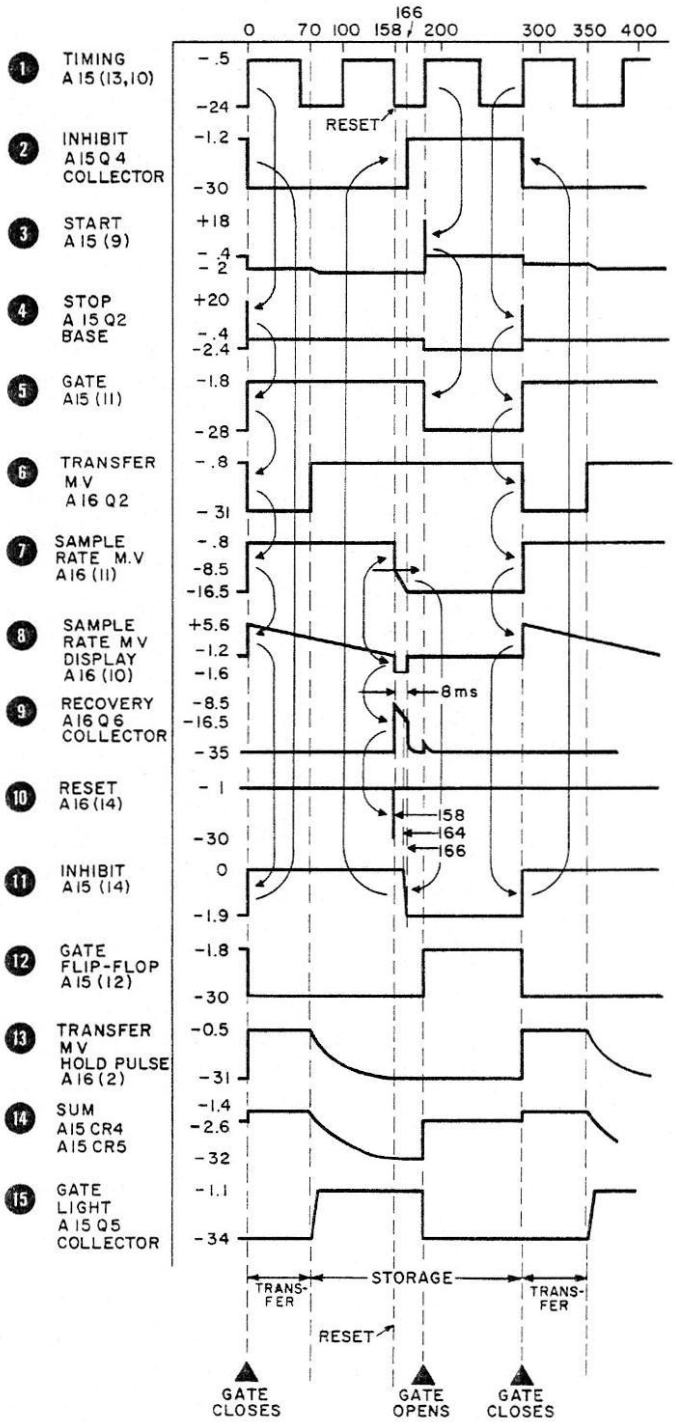

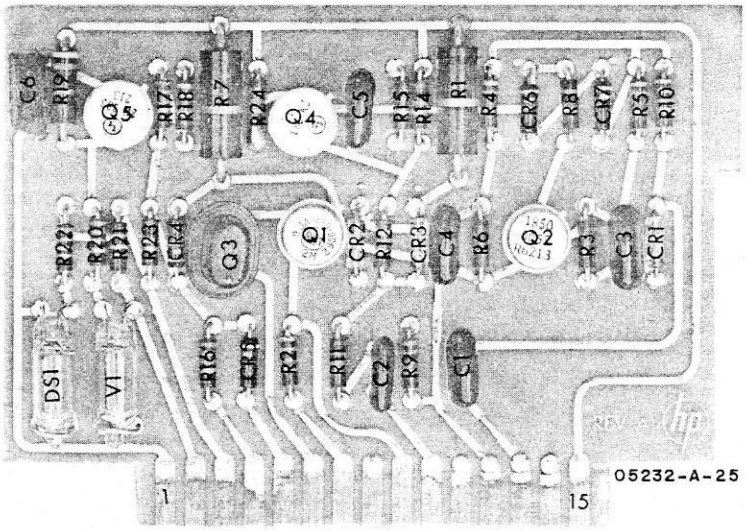
C6
R19
Q5
R22
R20
R21
DS1
V1
R23
CR4
R17
R18
Q3
R16
CR5
R7
R24
Q1
R21
Q4
R11
C5
CR2
R12
C2
R13
R14
CR3
R9
R1
C4
C1
R4
R6
CR6
Q2
R8
R3
CR7
C3
R5
CR1
R10
REV
hp
1
15
05232-A-25

A15

NOTES

1. UNLESS OTHERWISE NOTED:
   RESISTANCE IN OHMS,
   CAPACITANCE IN PICOFARADS
2. FILLED SQUARE (■) INDICATES CONDUCTING ELEMENT FOLLOWING RETURN TO QUIESCENT STATE AFTER RESET.

REFERENCE DESIGNATIONS

NO PREFIX	A15
C9	C1-6
	CR1-7
DS1	DS1
	Q1-5
R5	R1-24
S1	
	V1

OMITTED: R13

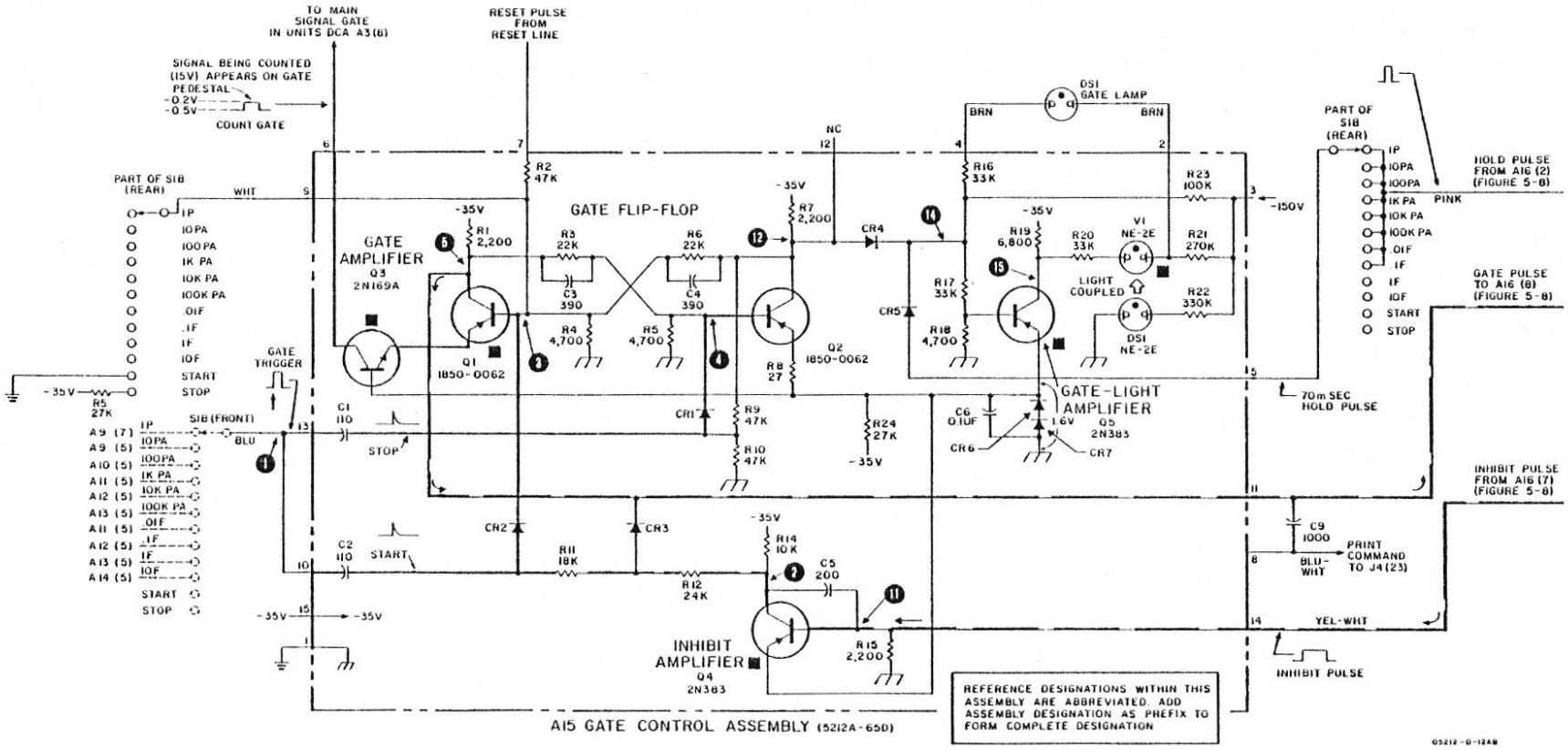

Figure 5-7. Gate Control Assembly A15

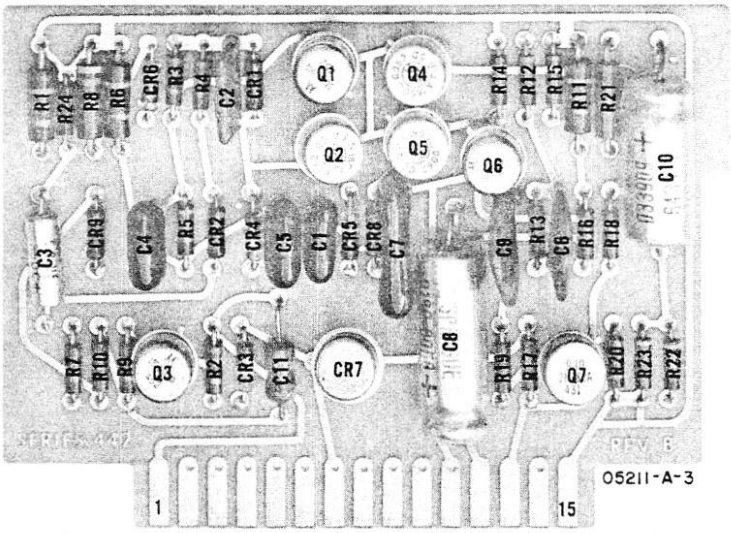
R1
R24
R8
R6
CR6
R3
R4
C2
CR1
Q1
Q4
R14
R12
R15
R11
R21
Q2
Q5
Q6
C10
C3
CR9
C4
R5
CR2
CR4
C5
C1
CR5
CR8
C7
C9
R13
C6
R16
R18
R7
R10
R9
Q3
R2
CR3
C11
CR7
C8
R19
R17
Q7
R20
R23
R22
1
15
05211-A-3

A16

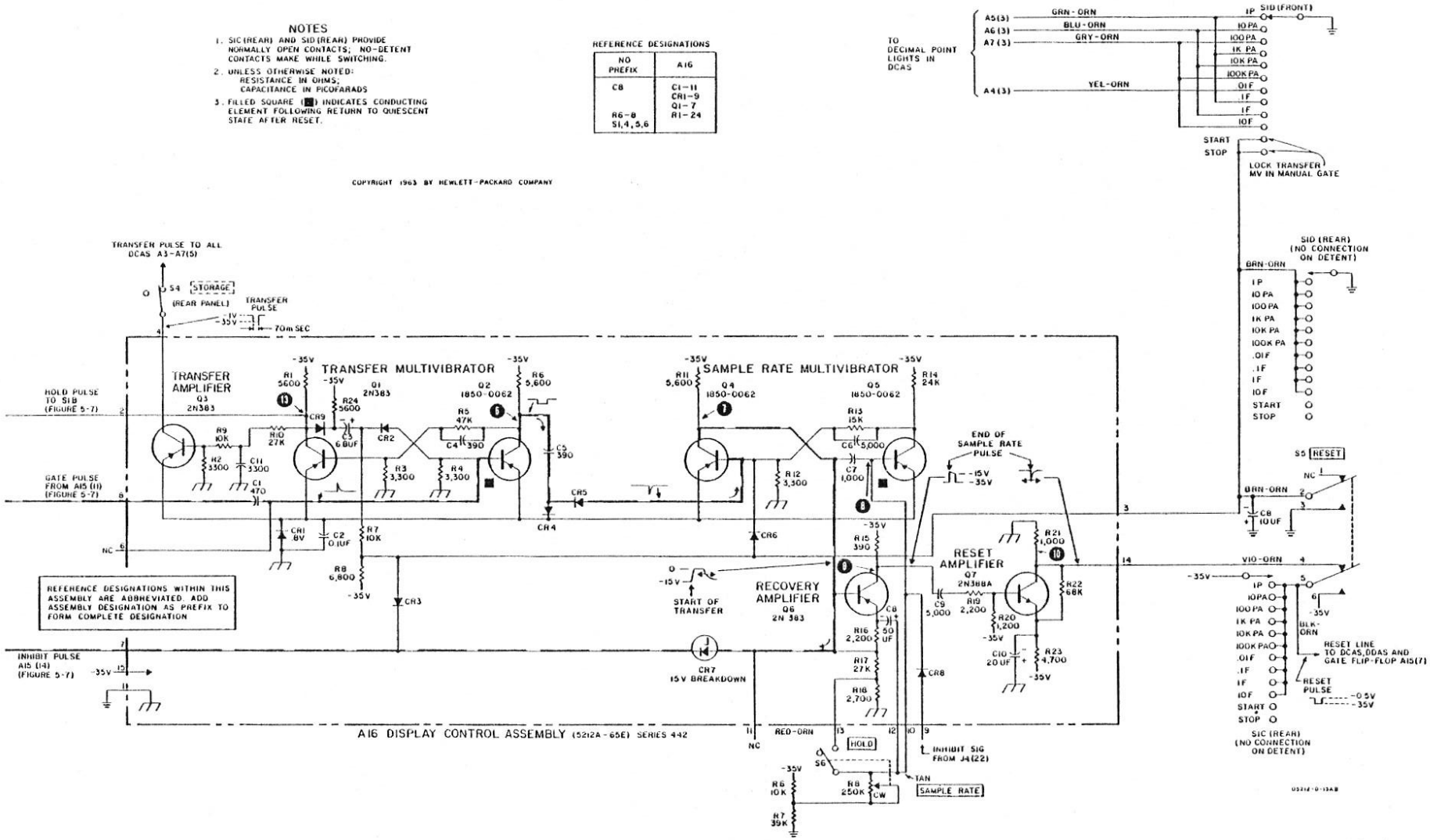

Figure 5-8. Display Control Assembly A16

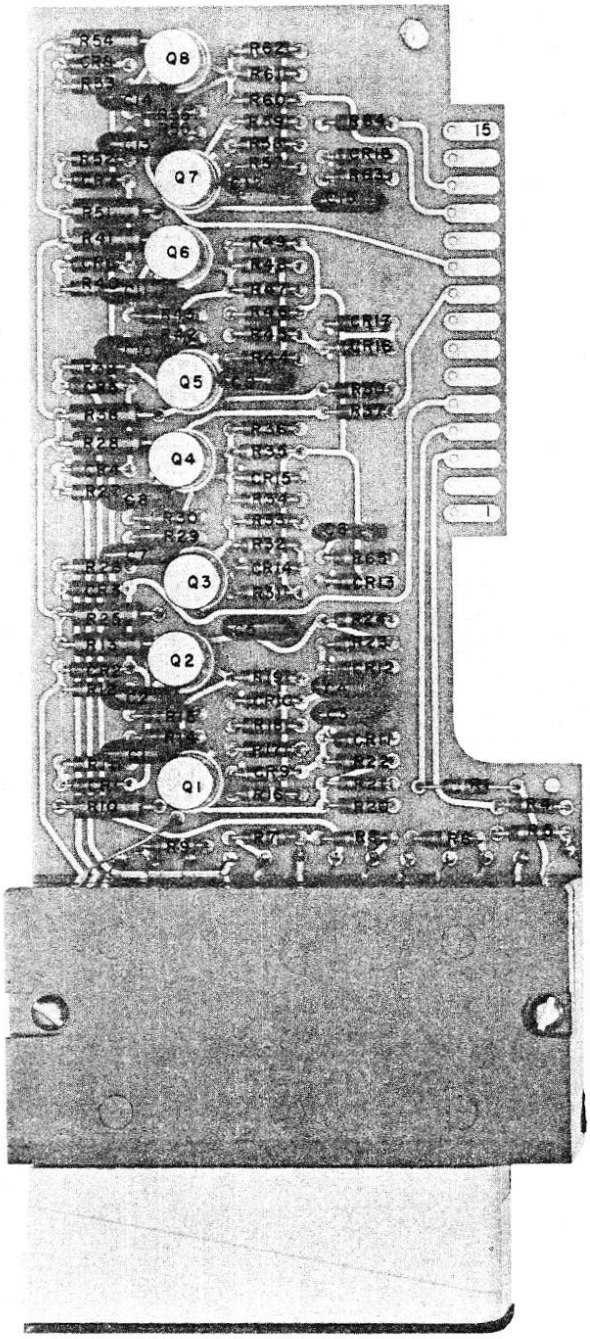

A3-A7

NOTES

1. REFERENCE DESIGNATIONS IN PARENTHESES INDICATE LIGHT DESTINATION FOR DS1-DS4 LIGHT SOURCE IS NOTED NEAR EACH V1 SECTION.
2. FILLED SQUARE (■) INDICATES CONDUCTING ELEMENT FOR DECIMAL "0" (BCD "0000").
3. UNLESS OTHERWISE INDICATED: RESISTANCE IN OHMS CAPACITANCE IN PICOFARADS
4. FOR DS1-DS4, SECTION A LIGHTS ON "1", SECTION B LIGHTS ON "0"

TRUTH TABLE

DIGIT	4 LINE CODE (0=−, 1=+)				RELEVANT STAGES				
					V1	BINARY			
	D	C	B	A		D	C	B	A
0	0	0	0	0	HPS		■	■	■
1	0	0	0	1	DMR	■		■	■
2	0	0	1	0	FNS		■	■	■
3	0	0	1	1	BLR		■	■	■
4	0	1	1	0	KQT	■	■		■
5	0	1	1	1	JQT	■	■		■
6	1	1	0	0	GPS		■	■	■
7	1	1	0	1	CMR	■		■	■
8	1	1	1	0	ENS	■		■	■
9	1	1	1	1	ALR	■		■	■

WAVEFORMS

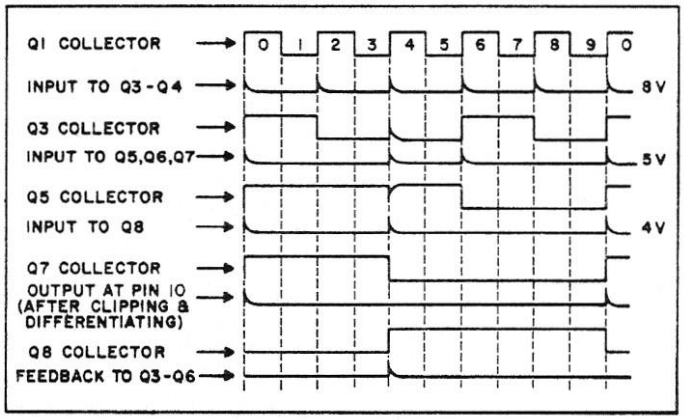

REFERENCE DESIGNATIONS

C1 - 13
CR1 - 13
DS1 - 15
Q1 - 8
R1 - 62
V1

PHYSICAL LAYOUT
(PLATE 040-3)

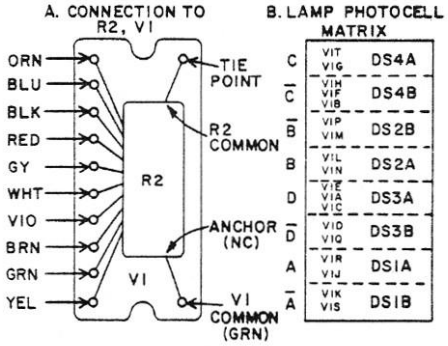

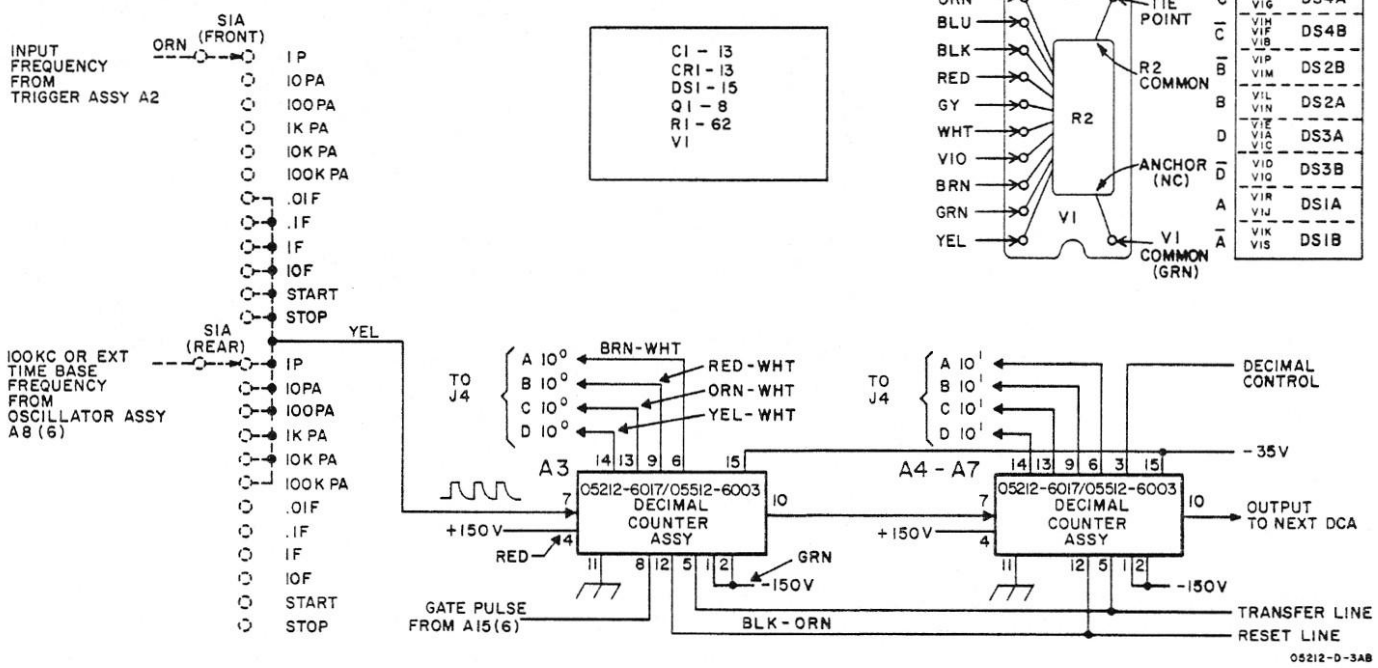

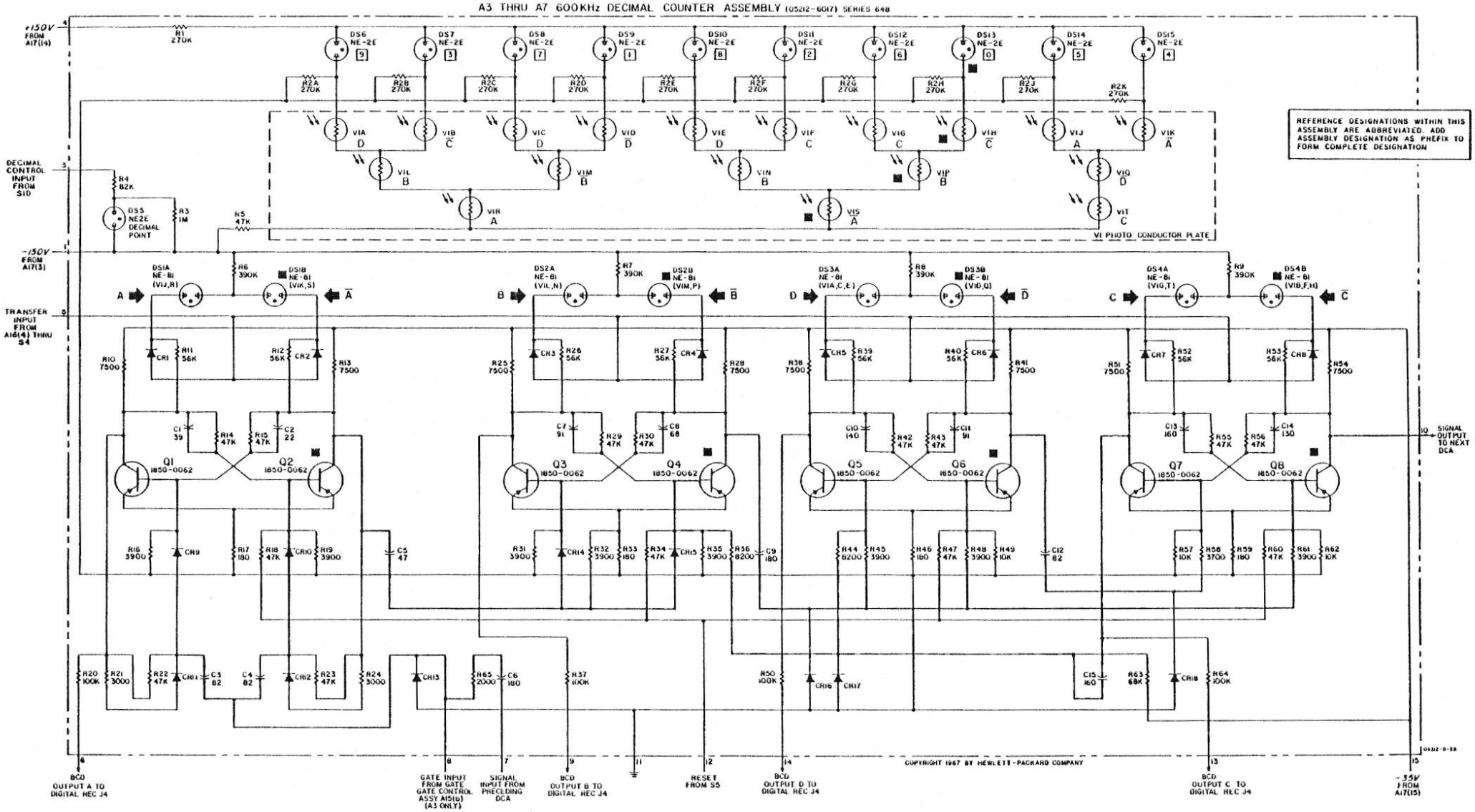

Figure 5-9. Decimal Counter Assemblies A3 through A7 (5212A)

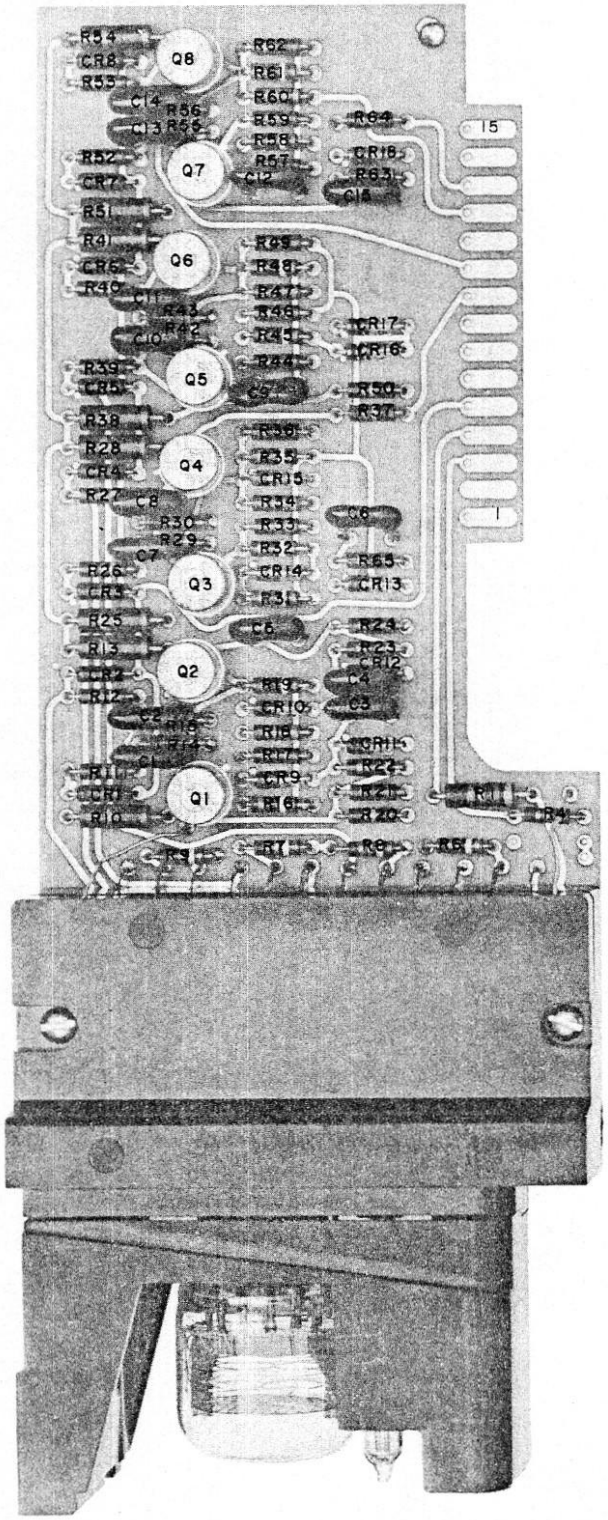

A3-A7

NOTES

1. REFERENCE DESIGNATIONS IN PARENTHESES INDICATE LIGHT DESTINATION FOR DS1-DS4; LIGHT SOURCE IS NOTED NEAR EACH V1 SECTION
2. UNLESS OTHERWISE INDICATED:
   RESISTANCE IN OHMS;
   CAPACITANCE IN PICOFARADS
3. FOR DS1-DS4, SECTION A LIGHTS ON "1", SECTION B LIGHTS ON "0"
4. FILLED SQUARE (■) INDICATES CONDUCTING ELEMENT FOR DECIMAL "0" (BCD "0000")

REFERENCE DESIGNATIONS

C1 - 13 CR1 - 13 DS1 - 6 Q1 - 8 R1 - 62 V1

OMITTED: R5

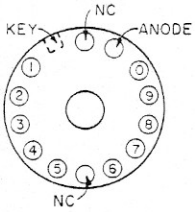

DIGITAL INDICATOR PIN CONNECTIONS (REAR VIEW)

WAVEFORMS

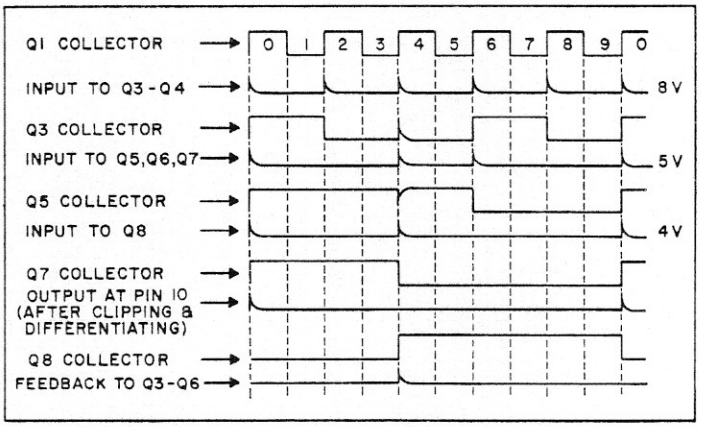

05212-D-5A

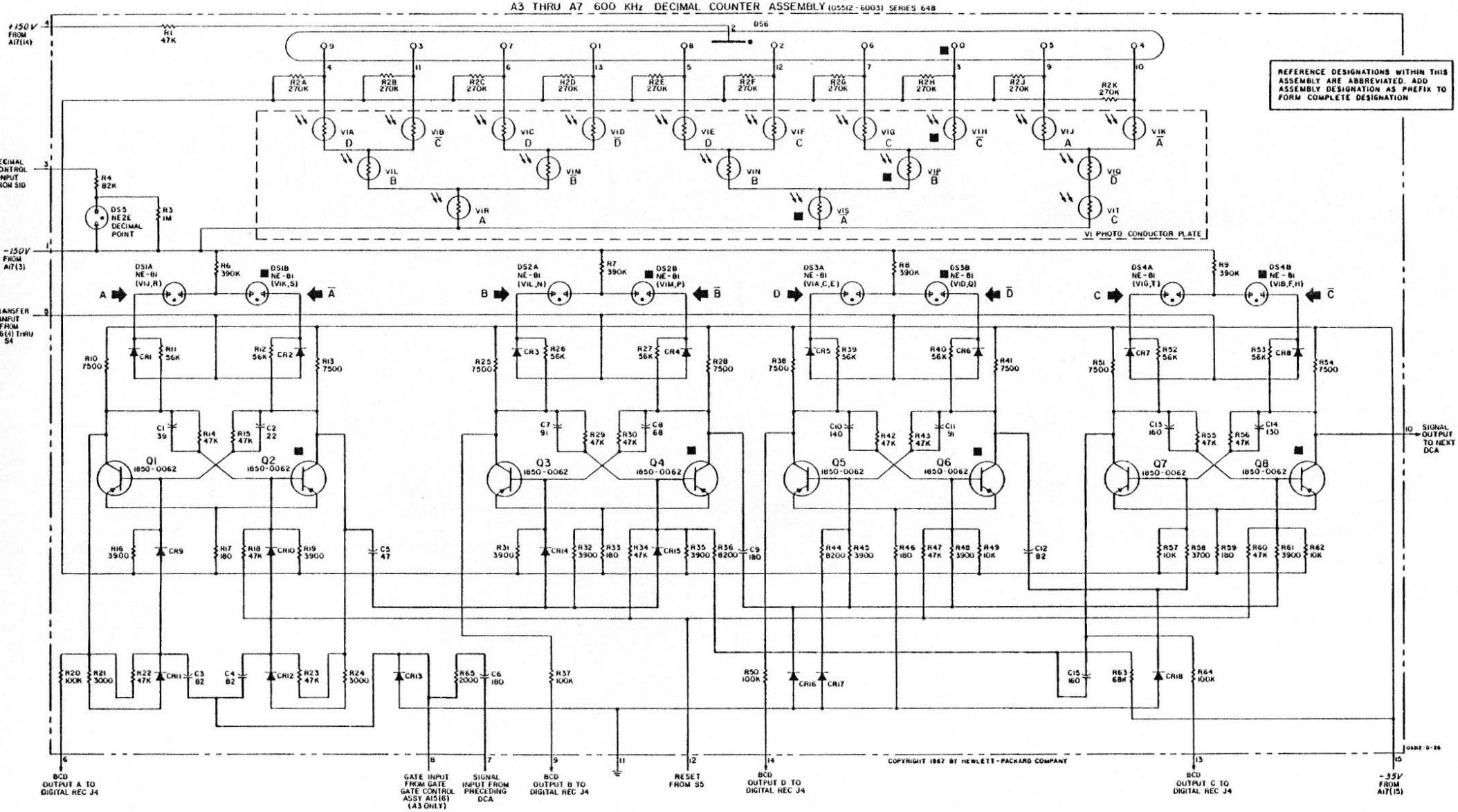

Figure 5-10. Decimal Counter Assemblies A3 through
(5512

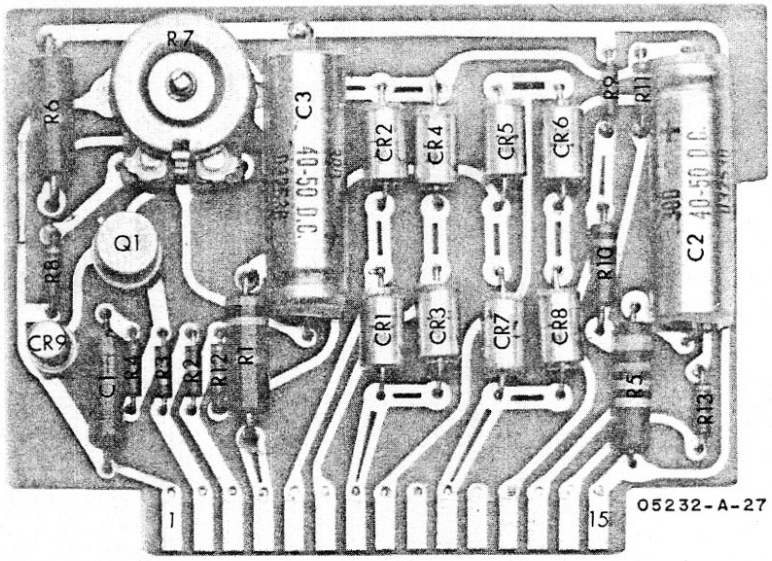
R7
R6
C3
CR2
CR4
CR5
CR6
R9
R11
Q1
R8
C2
R10
CR9
CR1
CR3
CR7
CR8
C1
R2
R12
R1
R5
R13
1
15
05232-A-27

A17

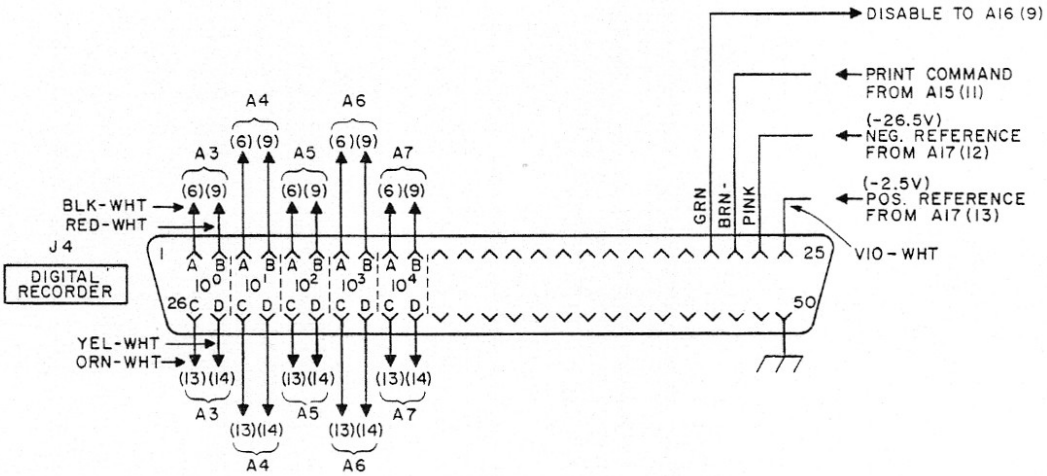
DISABLE TO A16 (9)
PRINT COMMAND FROM A15 (11)
(-26.5V) NEG. REFERENCE FROM A17 (12)
(-2.5V) POS. REFERENCE FROM A17 (13)
VIO-WHT
GRN
BRN-
PINK
A3
A4
A5
A6
A7
(6)(9)
BLK-WHT
RED-WHT
J4
DIGITAL RECORDER
1
25
26
50
A B C D
10^0
10^1
10^2
10^3
10^4
YEL-WHT
ORN-WHT
(13)(14)
05212-D-9A

NOTES

1. REFERENCE DESIGNATIONS WITHIN THIS ASSEMBLY ARE ABBREVIATED. ADD ASSEMBLY DESIGNATION AS PREFIX TO FORM COMPLETE DESIGNATION
2. UNLESS OTHERWISE INDICATED:
   RESISTANCE IN OHMS;
   CAPACITANCE IN PICOFARADS
3. FOR -35 VOLTS ADJUSTMENT SEE PARAGRAPHS 5-18

REFERENCE DESIGNATIONS

NO PREFIX	A17
B1 C4-6 F1, 2 J3 Q1, 2 R9, 10 S7, 8 T1 W1	C1-3 CR1-9 Q1 R1-13

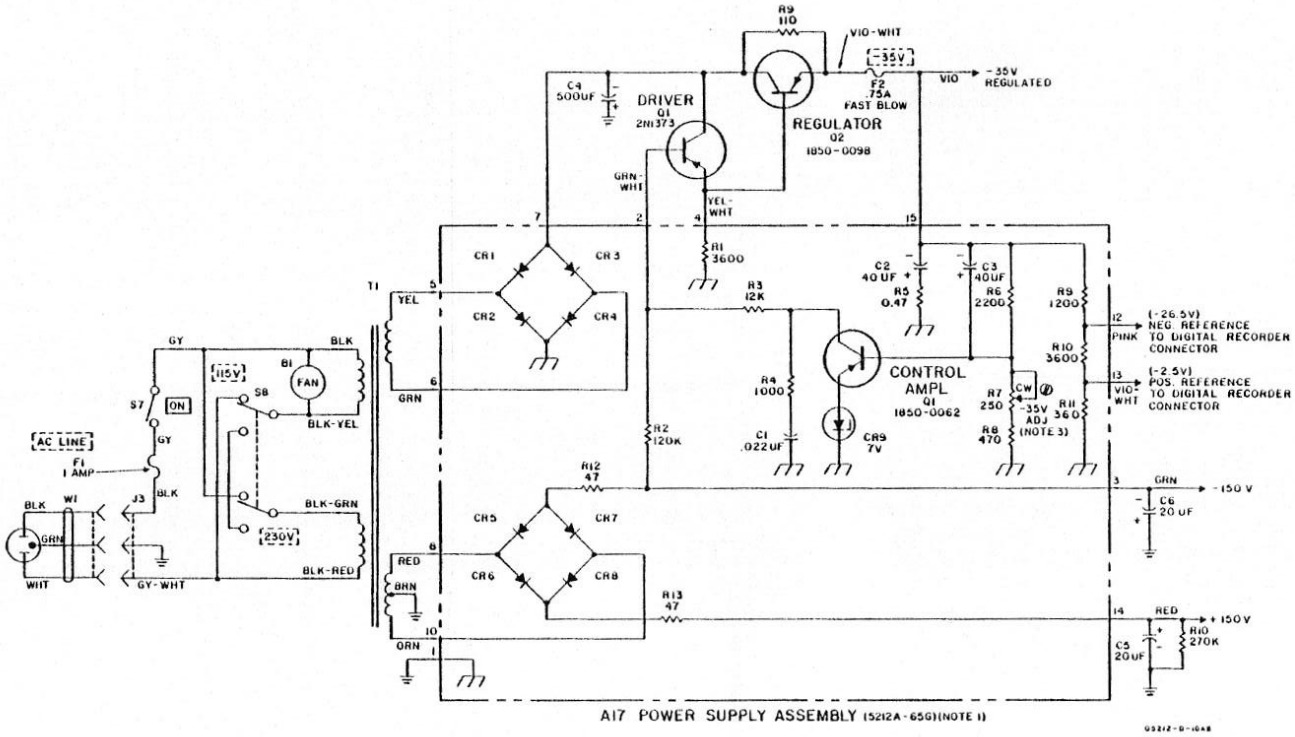

Figure 5-11. Power Supply Assembly A17, and Digital Recorder Jack

SECTION VI
REPLACEABLE PARTS

6-1. INTRODUCTION.

6-2. This section contains information for ordering replacement parts. Tables 6-1 through 6-9 list parts in alpha-numerical order of their reference designators and indicate the description and ⓗⓟ stock number of each part, together with any applicable notes. Table 6-10 lists parts in alpha-numerical order of their ⓗⓟ stock numbers and provides the following information on each part:

a. Description of the part (see list of abbreviations below).

b. Typical manufacturer of the part in a five-digit code; see list of manufacterers in Table 6-3.

c. Manufacturer's part number.

d. Total quantity used in the instrument (TQ column).

6-3. Miscellaneous parts are listed at the end of Table 6-1.

6-4. ORDERING INFORMATION.

6-5. To obtain replacement parts, address order or inquiry to your local Hewlett-Packard Field Office (see lists at rear of this manual for addresses). Identify parts by their Hewlett-Packard stock numbers.

6-6. To obtain a part that is not listed, include;

a. Instrument model number.

b. Instrument serial number.

c. Description of the part.

d. Function and location of the part.

REFERENCE DESIGNATORS

A	= assembly	E	= misc electronic part	MP	= mechanical part	TB	= terminal board
B	= motor	F	= fuse	P	= plug	TP	= test point
C	= capacitor	FL	= filter	Q	= transistor	V	= vacuum tube, neon bulb, photocell, etc.
CP	= coupling	J	= jack	R	= resistor		
CR	= diode	K	= relay	RT	= thermistor	W	= cable
DL	= delay line	L	= inductor	S	= switch	X	= socket
DS	= device signaling (lamp)	M	= meter	T	= transformer	Y	= crystal

ABBREVIATIONS

A	= amperes	GE	= germanium	N/C	= normally closed	RMO	= rack mount only
A.F.C	= automatic frequency control	GL	= glass	NE	= neon	RMS	= root-mean-square
AMPL	= amplifier	GRD	= ground(ed)	NI PL	= nickel plate		
				N/O	= normally open	S-B	= slow-blow
B.F.O.	= beat frequency oscillator	H	= henries	NPO	= negative positive zero (zero temperature coefficient)	SCR	= screw
BE CU	= beryllium copper	HEX	= hexagonal			SE	= selenium
BH	= binder head	HG	= mercury			SECT	= section(s)
BP	= bandpass	HR	= hour(s)	NRFR	= not recommended for field replacement	SEMICON	= semiconductor
BRS	= brass					SI	= silicon
BWO	= backward wave oscillator	IF	= intermediate freq	NSR	= not separately replaceable	SIL	= silver
		IMPG	= impregnated			SL	= slide
CCW	= counter-clockwise	INCD	= incandescent			SPL	= special
CER	= ceramic	INCL	= include(s)	OBD	= order by description	SST	= stainless steel
CMO	= cabinet mount only	INS	= insulation(ed)	OH	= oval head	SR	= split ring
COEF	= coefficient	INT	= internal	OX	= oxide	STL	= steel
COM	= common						
COMP	= composition	K	= kilo = 1000	P	= peak	TA	= tantalum
CONN	= connector			PC	= printed circuit	TD	= time delay
CP	= cadmium plate	LIN	= linear taper	PF	= picofarads = 10^{-12} farads	TGL	= toggle
CRT	= cathode-ra tube	LK WASH	= lock washer			TI	= titanium
CW	= clockwise	LOG	= logarithmic taper	PH BRZ	= phosphor bronze	TOL	= tolerance
		LPF	= low pass filter	PHL	= Phillips	TRIM	= trimmer
DEPC	= deposited carbon			PIV	= peak inverse voltage	TWT	= traveling wave tube
DR	= drive	M	= milli = 10^{-3}	P/O	= part of		
		MEG	= meg = 10^{6}	POLY	= polystyrene	U	= micro = 10^{-6}
ELECT	= electrolytic	METFLM	= metal film	PORC	= porcelain		
ENCAP	= encapsulated	MFR	= manufacturer	POS	= position(s)	VAR	= variable
EXT	= external	MINAT	= miniature	POT	= potentiometer	VDCW	= dc working volts
		MOM	= momentary	PP	= peak-to-peak		
F	= farads	MTG	= mounting	PT	= point	W/	= with
FH	= flat head	MY	= "mylar"	RECT	= rectifier	W	= watts
FIL H	= fillister head			RF	= radio frequency	WW	= wirewound
FXD	= fixed	N	= nano (10^{-9})	RH	= round head	W/O	= without

01194-10

Table 6-1. Components Located on Chassis (No Prefix)

Circuit Reference	hp Stock No.	Description #	Note
A1	05214-6014	Amplifier assy.	
A2	05212-6005	Trigger assy.	
A3 thru A7	05212-6017	Decimal counter assy	a
	05512-6003	Decimal counter assy	b
A8	5212A-65F	Oscillator assy	
A9 thru A14	5212A-65C	Decade divider assy	
A15	5212A-65D	Gate control assy	
A16	5212A-65E	Sampling control assy	
A17	5212A-65G	Power supply assy	
B1	3140-0030	Fan motor: 115 V, 60 cycle	
C1	0170-0073	C: fxd, my, 1 mf ±10%, 600 vdcw	
C2	0140-0200	C: fxd, mica, 390 pf ±5%, 300 vdcw	
C3	0130-0001	C: var, cer, 7-45 pf, 500 vdcw	
C4	0180-0047	C: fxd, elect, 500 μf, 75 vdcw	
C5, C6	0180-0107	C: fxd, aluminum elect, 20 μf +100% -10%, 200 vdcw	
C7	0140-0149	C: fxd, mica, 470 μf ±5%, 300 vdcw	
C8	0180-0059	C: fxd, elect, 10 μf -10% +100%, 25 vdcw	
C9	0140-0152	C: fxd, mica, 1000 pf ±5%, 300 vdcw	
DS1	1450-0042	Lamp, neon: specially selected NE-2E	
F1	2110-0001	Fuse, cartridge: 1 amp, (for 115V operation)	
	2110-0012	Fuse, cartridge: 0.5 amp, (for 230V operation)	
F2	2110-0033	Fuse, 0.75 amp, 250 V	
J1	1250-0118	Connector, female: BNC, type UG-1094A/U	
J2	1250-0083	Connector, female: BNC, type UG-1094/U	
J3	1251-0148	Connector, male: 3 pin	
J4	1251-0087	Connector, female: 50 pin, minat	
Q1	1850-0070	Transistor: type 2N1373	
	1205-0025	Nut heat sink	
	1205-0026	Heat sink body	
Q2	1850-0098	Transistor: Germanium PNP	
R1	2100-0273	R: var, comp, 3M ±20%, 1/4 W	
R2	0683-1035	R: fxd, comp, 10K ohms ±5%, 1/4 W	
R3	0683-2245	R: fxd, comp, 220K ohms ±5%, 1/4 W	
R4	0683-1535	R: fxd, comp, 15K ohms ±5%, 1/4 W	
R5	0683-2735	R: fxd, comp, 27K ohms ±5%, 1/4 W	

See introduction to this section

Table 6-1. Components Located on Chassis (No Prefix) Cont'd

Circuit Reference	hp Stock No.	Description #	Note
R6	0683-1035	R: fxd, comp, 10K ohms ±5%, 1/4 W	
R7	0683-3935	R: fxd, comp, 39K ohms ±5%, 1/4 W	
R8	2100-0083	R: var, comp, 250K ohms ±30%, 1/4 W	
R9	0816-0020	R: fxd, ww, 110 ohms ±10%, 10 W	
R10	0684-2741	R: fxd, comp, 270K ohms ±10%, 1/4 W	
S1	3100-0276	Switch, rot: 4 sect, 12 pos	
S2		Nsr; part of R1	
S3	3101-0038	Switch, tog: DPDT	
S4	3101-0037	Switch, tog: SPST	
S5	3101-0010	Switch, push: DPDT	
S6		Not assigned	
S7	3101-0036	Switch, tog: SPST	
S8	3101-0033	Switch, slide: DPDT	
T1	9100-0139	Transformer, power	
W1	8120-0078	Cable, power assy	
XA1, XA2	1251-0199	2X6 Pin connector PC	
XA3 thru XA17	1251-0135	Connector, pc: 15 pins	
XF1, XF2	1400-0084	Fuseholder, 3 AG cartridge	
XY1	1200-0028	Socket, crystal	
XY2	1200-0044	Socket, transistor	
Y1	0410-0021	Crystal, quartz, 100 KC	
		MISCELLANEOUS	
	10503A	Assy, cable: 48" BNC-to-BNC	
	5000-0011	Crystal clip	
	0370-0077	Knob: black, bar type, 1/4", w/arrow	
	0370-0026	Knob: black, round, 1/4", w/arrow	

See introduction to this section

Table 6-1. Components Located on Chassis (No Prefix) Cont'd

Circuit Reference	hp Stock No.	Description #	Note
	5233L-44A	Kit: 3 1/2" rack mount	
	5212A-85A	Assy, filter air	
	1200-0043	Insulator, transistor (used w/Bushing 1200-0081)	
	1200-0081	Bushing, transistor	
	3160-0027	Blade, fan: aluminum, hub 5/16"	
		Note a - 5212A only Note b - 5512A only	

Table 6-2. Amplifier Assy, 05214-6014 (designations prefixed A1)

Circuit Reference	hp Stock No.	Description #	Note
C1	0180-0050	C: fxd, elect, 40 μf -15% +100%, 50 vdcw	
C2	0180-0039	C: fxd, elect, 100 μf, 12 vdcw	
C3	0140-0198	C: fxd, mica, 200 pf ±5%, 300 vdcw	
C4	0180-0063	C: fxd, elect, 500 μf -10% +100%, 3 vdcw	
C5	0140-0152	C: fxd, mica, 1000 pf ±5%, 300 vdcw	
CR1	1902-0199	Diode, Si	
L1	9140-0027	Inductor, 35 μf ±10%	
Q1	1854-0003	Transistor, Si	
Q2, Q3	1850-0037	Transistor: 2N274	
R1	0683-1025	R: fxd, comp, 1K ohms ±5%, 1/4W	
R2	0683-6835	R: fxd, comp, 68K ohms ±5%, 1/4W	
R3	0683-1845	R: fxd, comp, 180K ohms ±5%, 1/4W	
R4	0683-1545	R: fxd, comp, 150K ohms ±5%, 1/4W	
R5	0683-3335	R: fxd, comp, 33K ohms ±5%, 1/4W	

See introduction to this section

Table 6-2. Amplifier Assy, 5212A-65J (designations prefixed A1) Cont'd

Circuit Reference	hp Stock No.	Description #	Note
R6	0683-2235	R: fxd, comp, 22K ohms ±5%, 1/4W	
R7	0683-2725	R: fxd, comp, 2.7K ohms ±5%, 1/4W	
R8	0683-3935	R: fxd, comp, 39K ohms ±5%, 1/4W	
R9	0683-4735	R: fxd, comp, 47K ohms ±5%, 1/4W	
R10	0686-6225	R: fxd, comp, 6.2K ohms ±5%, 1/2W	
R11	0683-6815	R: fxd, comp, 680 ohms ±5%, 1/4W	
R12	0683-1515	R: fxd, comp, 150 ohms ±5%, 1/4W	
R13	0683-1835	R: fxd, comp, 18K ohms ±5%, 1/4W	

Table 6-3. Trigger Assy, 05212-6005 (designations prefixed A2)

Circuit Reference	hp Stock No.	Description #	Note
C1	0180-0058	C: fxd, elect, 50 μf -10% +100%, 25 vdcw	
C2	0140-0199	C: fxd, mica, 240 pf ±5%, 300 vdcw	
C3	0140-0221	C: fxd, mica, 220 pf ±2%, 300 vdcw	
C4	0150-0121	C: fxd, cer, 0.1 μf +80% -20%, 50 vdcw	
CR1	1910-0016	Diode, Ge: 60 PIV	
Q1, Q2	1850-0062	Transistor, Ge	
R1	0683-3335	R: fxd, comp, 33K ohms ±5%, 1/4 W	
R2	0683-2015	R: fxd, comp, 200 ohms ±5%, 1/4 W	
R3	2100-0154	R: comp, lin, 1K ohms ±30%, 3/10 W	
R4	0689-5625	R: fxd, comp, 5.6K ohms ±5%, 1W	
R5	0683-1535	R: fxd, comp, 15K ohms ±5%, 1/4 W	
R6	0683-1325	R: fxd, comp, 1300 ohms ±5%, 1/4 W	
R7	0760-0017	R: fxd, met flm, 3900 ohms ±2%, 1 W	
R8	0683-2705	R: fxd, comp, 27 ohms ±5%, 1/4 W	
R9	0683-4705	R: fxd, comp, 47 ohms ±5%, 1/4 W	
R10	0683-2235	R: fxd, comp, 22K ohms ±5%, 1/4 W	

See introduction to this section

Table 6-4. Decimal Counter Assy, 05212-6017/05512-6003 (designations prefixed A3-A7)

Reference Designation	ⓗⓟ Stock No.	Description #	Note
A3 thru A7	05512-6003	Decade Counter Assembly	b
	05212-6017	Decade Counter Assembly	a
	05212-2016	Board: Blank Pc	
	05212-6010	Readout Block Assy	
C1	0140-0190	C: fxd, mica, 39 pf ±5%, 300 vdcw	
C2	0140-0145	C: fxd, mica, 22 pf ±5%, 500 vdcw	
C3, C4	0140-0193	C: fxd, mica, 82 pf ±5%, 300 vdcw	
C5	0140-0204	C: fxd, mica, 47 pf ±5%, 500 vdcw	
C6	0140-0197	C: fxd, mica, 180 pf ±5%	
C7	0160-2203	C: fxd, mica, 91 pf ±5%	
C8	0140-0192	C: fxd, mica, 68 pf ±5%, 300 vdcw	
C9	0140-0197	C: fxd, mica, 180 pf ±5%	
C10	0140-0217	C: fxd, mica, 140 pf ±5%, 300 vdcw	
C11	0160-2203	C: fxd, mica, 91 pf ±5%	
C12	0140-0192	C: fxd, mica, 82 pf ±5%, 300 vdcw	
C13	0160-2206	C: fxd, mica, 160 pf ±5%	
C14	0140-0195	C: fxd, mica, 130 pf ±5%, 300 vdcw	
C15	0160-2206	C: fxd, mica, 160 pf ±5%	
CR1 thru CR8	1901-0025	Diode: Silicon 100 ma	
CR9 thru CR18	1910-0016	Diode: Germanium 1 Microsec 60 wiv	
DS1 thru DS4		Lamp, Neon (Match Pair)	c
DS5	2140-0022	Lamp, Neon NE2-E	
DS6	2140-0022	Lamp, Neon NE2-E	a
DS6	1970-0002	Indicator 10 Digit	b
DS7 thru DS15	2140-0022	Lamp, Neon NE2-E	a
Q1 thru Q8	1850-0062	Transistor, (Germanium PNP)	
R1	0683-2745	R: fxd, comp, 270K ohms ±5%, 1/4W	a
	0686-4735	R: fxd, comp, 47K ohms ±5%, 1/2W	b
R2		Resistive Network (Includes 10 Resistors) 270K ±20%, 1/4W	c
R3	0683-1055	R: fxd, comp, 1 megohm ±5%, 1/4W	
R4	0683-8235	R: fxd, comp, 82K ohms ±5%, 1/4W	
R5	0683-4735	R: fxd, comp, 47K ohms ±5%, 1/4W	a
R6 thru R9	0683-3945	R: fxd, comp, 390K ohms ±5%, 1/4W	
R10	0686-7525	R: fxd, comp, 7500 ohm ±5%, 1/2W	
R11	0683-5635	R: fxd, comp, 56K ohm ±5%, 1/4W	
R12	0683-5635	R: fxd, comp, 56K ohm ±5%, 1/4W	
R13	0686-7525	R: fxd, comp, 7500 ohm ±5%, 1/2W	
R14, R15	0683-7535	R: fxd, comp, 47K ohm ±5%, 1/4W	
R16	0683-3925	R: fxd, comp, 3.9K ohm ±5%, 1/4W	
R17	0683-1815	R: fxd, comp, 180 ohm ±5%, 1/4W	
R18	0683-4735	R: fxd, comp, 47K ohm ±5%, 1/4W	
R19	0683-3925	R: fxd, comp, 3.9K ohm ±5%, 1/4W	
R20	0683-1045	R: fxd, comp, 100K ohm ±5%, 1/4W	
R21	0683-3025	R: fxd, comp, 3K ohm ±5%, 1/4W	
R22, R23	0683-4735	R: fxd, comp, 47K ohm ±5%, 1/4W	
R24	0683-3025	R: fxd, comp, 3K ohm ±5%, 1/4W	

 # See list of abbreviations in introduction to this section

Table 6-4. Decimal Counter Assy, 05212-6017/05512-6003 (designations prefixed A3-A7) (Cont'd)

Reference Designation	Stock No.	Description #	Note
R23	0683-4735	R: fxd, comp, 47K ohm ±5%, 1/4W	
R24	0683-3025	R: fxd, comp, 3K ohm ±5%, 1/4W	
R25	0686-7525	R: fxd, comp, 7500 ohm ±5%, 1/2W	
R26, R27	0683-5635	R: fxd, comp, 56K ohm ±5%, 1/4W	
R28	0686-7525	R: fxd, comp, 7500 ohm ±5%, 1/2W	
R29, R30	0683-4735	R: fxd, comp, 47K ohm ±5%, 1/4W	
R31, R32	0683-3925	R: fxd, comp, 3.9K ohm ±5%, 1/4W	
R33	0683-1815	R: fxd, comp, 180 ohm ±5%, 1/4W	
R34	0683-4735	R: fxd, comp, 47K ohm ±5%, 1/4W	
R35	0683-3925	R: fxd, comp, 3.9K ohm ±5%, 1/4W	
R36	0683-8225	R: fxd, comp, 8.2K ohm ±5%, 1/4W	
R37	0683-1045	R: fxd, comp, 100K ohm ±5%, 1/4W	
R38	0686-7525	R: fxd, comp, 7500 ohm ±5%, 1/2W	
R39, R40	0683-5635	R: fxd, comp, 56K ohm ±5%, 1/4W	
R41	0686-7525	R: fxd, comp, 7500 ohm ±5%, 1/2W	
R42, R43	0683-4735	R: fxd, comp, 47K ohm ±5%, 1/4W	
R44	0683-8225	R: fxd, comp, 8.2K ohm ±5%, 1/4W	
R45	0683-3925	R: fxd, comp, 3.9K ohm ±5%, 1/4W	
R46	0683-1815	R: fxd, comp, 180 ohm ±5%, 1/4W	
R47	0683-4735	R: fxd, comp, 47K ohm ±5%, 1/4W	
R48	0683-3925	R: fxd, comp, 3.9K ohm ±5%, 1/4W	
R49	0683-1035	R: fxd, comp, 10K ohm ±5%, 1/4W	
R50	0683-1045	R: fxd, comp, 100K ohm ±5%, 1/4W	
R51	0686-7525	R: fxd, comp, 7500 ohm ±5%, 1/2W	
R52, R53	0683-5635	R: fxd, comp, 56K ohm ±5%, 1/4W	
R54	0686-7525	R: fxd, comp, 7500 ohm ±5%, 1/2W	
R55, R56	0683-4735	R: fxd, comp, 47K ohm ±5%, 1/4W	
R57	0683-1035	R: fxd, comp, 10K ohm ±5%, 1/4W	
R58	0683-3925	R: fxd, comp, 3.9K ohm ±5%, 1/4W	
R59	0683-1815	R: fxd, comp, 180 ohm ±5%, 1/4W	
R60	0683-4735	R: fxd, comp, 47K ohm ±5%, 1/4W	
R61	0683-3925	R: fxd, comp, 3.9K ohm ±5%, 1/4W	
R62	0683-1035	R: fxd, comp, 10K ohm ±5%, 1/4W	
R63	0683-6835	R: fxd, comp, 68K ohm ±5%, 1/4W	
R64	0683-1045	R: fxd, comp, 100K ohm ±5%, 1/4W	
R65	0683-2025	R: fxd, comp, 2K ohm ±5%, 1/4W	
V1		Plate Photoconductor	c
		MISCELLANEOUS	
	5212A-83A	Plate, Numeral	a
		Note a - 5212A only Note b - 5512A only Note c - Not Field Replaceable; Part of Readout Block Assembly (05212-6010).	

 # See list of abbreviations in introduction to this section

Table 6-5. Oscillator Assy, 5212A-65F (designations prefixed A8)

Circuit Reference	ⓗⓟ Stock No.	Description #	Note
C1	0150-0121	C: fxd, cer, 0.1 μf +80% -20%, 50 vdcw	
C2	0170-0072	C: fxd, my, 1 μf ±10%, 200 vdcw	
C3	0140-0156	C: fxd, mica, 1500 pf ±2%, 300 vdcw	
CR1	1910-0016	Diode, Ge: 60 PIV	
Q1	1851-0006	Transistor: type 2N169A	
Q2, Q3	1850-0062	Transistor, Ge, type 2N404	
R1		Nsr; part of T1	
R2	0683-6835	R: fxd, comp, 68K ohms ±5%, 1/4 W	
R3	0683-1035	R: fxd, comp, 10K ohms ±5%, 1/4 W	
R4	0683-1835	R: fxd, comp, 18K ohms ±5%, 1/4 W	
R5	0683-1035	R: fxd, comp, 10K ohms ±5%, 1/4 W	

See introduction to this section

Table 6-5. Oscillator Assy, 5212A-65F (designations prefixed A8) Cont'd

Circuit Reference	hp Stock No.	Description #	Note
R6	0683-1225	R: fxd, comp, 1.2K ohms ±5%, 1/4 W	
R7	0683-5635	R: fxd, comp, 56K ohms ±5%, 1/4 W	
R8	0683-1525	R: fxd, comp, 1500 ohms ±5%, 1/4 W	
R9	0686-5625	R: fxd, comp, 5.6K ohms ±5%, 1/2 W	
R10	0683-5625	R: fxd, comp, 5.6K ohms ±5%, 1/4 W	
R11	0683-2225	R: fxd, comp, 2.2K ohms ±5%, 1/4 W	
R12	0683-4705	R: fxd, comp, 47 ohms ±5%, 1/4 W	
R13	0686-3925	R: fxd, comp, 3.9K ohms ±5%, 1/2 W	
R14	0683-2035	R: fxd, comp, 20K ohms ±5%, 1/4 W	
R15	0683-1025	R: fxd, comp, 1K ohms ±5%, 1/4 W	
T1	5212A-9A	Transformer, oscillator (includes R1, fxd, comp, 10K ohms ±10%, 1/2 W)	

Table 6-6. Decade Divider Assy, 5212A-65C (designations prefixed A9-A14)

Circuit Reference	hp Stock No.	Description	Note
C1	0150-0121	C: fxd, cer, 0.1 μf +80% -20%, 50 vdcw	
C2	0140-0194	C: fxd, mica, 110 pf ±5%, 300 vdcw	
C3, C4	0140-0195	C: fxd, mica, 130 pf ±5%, 300 vdcw	
C5	0140-0196	C: fxd, mica, 150 pf ±5%, 300 vdcw	
C6, C7	0140-0196	C: fxd, mica, 150 pf ±5%, 300 vdcw	
C8	0140-0199	C: fxd, mica, 240 pf ±5%, 300 vdcw	
C9, C10	0140-0195	C: fxd, mica, 130 pf ±5%, 300 vdcw	
C11	0140-0194	C: fxd, mica, 110 pf ±5%, 300 vdcw	
C12, C13	0140-0198	C: fxd, mica, 200 pf ±5%, 300 vdcw	
C14	0140-0200	C: fxd, mica, 390 pf ±5%, 300 vdcw	
CR1 thru CR5	1910-0015	Diode, Ge	
Q1 thru Q8	1850-0062	Transistor, Ge	

See introduction to this section

Table 6-6. Decade Divider Assy, 5212A-65C (designations prefixed A9-A14) Cont'd

Circuit Reference	ⓗⓟ Stock No.	Description #	Note
R1	0683-3915	R: fxd, comp, 390 ohms ±5%, 1/4 W	
R2	0683-4735	R: fxd, comp, 47K ohms ±5%, 1/4 W	
R3	0683-6825	R: fxd, comp, 6.8K ohms ±5%, 1/4 W	
R4	0683-4735	R: fxd, comp, 47K ohms ±5%, 1/4 W	
R5	0683-1035	R: fxd, comp, 10K ohms ±5%, 1/4 W	
R6	0683-3925	R: fxd, comp, 3.9K ohms ±5%, 1/4 W	
R7	0683-2015	R: fxd, comp, 200 ohms ±5%, 1/4 W	
R8	0683-3925	R: fxd, comp, 3.9K ohms ±5%, 1/4 W	
R9	0683-6825	R: fxd, comp, 6.8K ohms ±5%, 1/4 W	
R10	0683-4735	R: fxd, comp, 47K ohms ±5%, 1/4 W	
R11	0683-1035	R: fxd, comp, 10K ohms ±5%, 1/4 W	
R12, R13	0683-4735	R: fxd, comp, 47K ohms ±5%, 1/4 W	
R14	0683-6825	R: fxd, comp, 6.8K ohms ±5%, 1/4 W	
R15	0683-4735	R: fxd, comp, 47K ohms ±5%, 1/4 W	
R16	0683-8225	R: fxd, comp, 8.2K ohms ±5%, 1/4 W	
R17	0683-3925	R: fxd, comp, 3.9K ohms ±5%, 1/4 W	
R18	0683-2015	R: fxd, comp, 200 ohms ±5%, 1/4 W	
R19	0683-3925	R: fxd, comp, 3.9K ohms ±5%, 1/4 W	
R20	0683-6825	R: fxd, comp, 6.8K ohms ±5%, 1/4 W	
R21	0683-4735	R: fxd, comp, 47K ohms ±5%, 1/4 W	
R22	0683-1035	R: fxd, comp, 10K ohms ±5%, 1/4 W	
R23	0683-4735	R: fxd, comp, 47K ohms ±5%, 1/4 W	
R24	0683-6835	R: fxd, comp, 68K ohms ±5%, 1/4 W	
R25	0683-4735	R: fxd, comp, 47K ohms ±5%, 1/4 W	
R26	0683-6825	R: fxd, comp, 6.8K ohms ±5%, 1/4 W	
R27	0683-4735	R: fxd, comp, 47K ohms ±5%, 1/4 W	
R28	0683-1035	R: fxd, comp, 10K ohms ±5%, 1/4 W	
R29	0683-3925	R: fxd, comp, 3.9K ohms ±5%, 1/4 W	
R30	0683-2015	R: fxd, comp, 200 ohms ±5%, 1/4 W	
R31	0683-3925	R: fxd, comp, 3.9K ohms ±5%, 1/4 W	
R32	0683-6825	R: fxd, comp, 6.8K ohms ±5%, 1/4 W	
R33	0683-4735	R: fxd, comp, 47K ohms ±5%, 1/4 W	
R34	0683-8225	R: fxd, comp, 8.2K ohms ±5%, 1/4 W	
R35, R36	0683-4735	R: fxd, comp, 47K ohms ±5%, 1/4 W	
R37	0683-6825	R: fxd, comp, 6.8K ohms ±5%, 1/4 W	

See introduction to this section

Table 6-6. Decade Divider Assy, 5212A-65C (designations prefixed A9-A14) Cont'd

Circuit Reference	hp Stock No.	Description #	Note
R38	0683-4735	R: fxd, comp, 47K ohms ±5%, 1/4 W	
R39	0683-1035	R: fxd, comp, 10K ohms ±5%, 1/4 W	
R40	0683-3925	R: fxd, comp, 3.9K ohms ±5%, 1/4 W	
R41	0683-2015	R: fxd, comp, 200 ohms ±5%, 1/4 W	
R42	0683-3925	R: fxd, comp, 3.9K ohms ±5%, 1/4 W	
R43	0683-6825	R: fxd, comp, 6.8K ohms ±5%, 1/4 W	
R44	0683-4735	R: fxd, comp, 47K ohms ±5%, 1/4 W	
R45	0683-1035	R: fxd, comp, 10K ohms ±5%, 1/4 W	
R46	0683-4735	R: fxd, comp, 47K ohms ±5%, 1/4 W	

Table 6-7. Gate Control Assy, 5212A-65D (designations prefixed A15)

Circuit Reference	hp Stock No.	Description #	Note
C1, C2	0140-0194	C: fxd, mica, 110 pf ±5%, 300 vdcw	
C3, C4	0140-0200	C: fxd, mica, 390 pf ±5%, 300 vdcw	
C5	0140-0198	C: fxd, mica, 200 pf ±5%, 300 vdcw	
C6	0150-0121	C: fxd, cer, 0.1 μf +80% -20%, 50 vdcw	
CR1 thru CR3	1910-0016	Diode, Ge: 60 PIV	
CR4, CR5	1901-0025	Diode, Si	
CR6, CR7	1901-0100	Diode, Si	
DS1	2140-0022	Lamp, neon: NE2E	
Q1, Q2	1850-0062	Transistor, Ge	
Q3	1851-0006	Transistor: type 2N169A	
Q4, Q5	1850-0040	Transistor: type 2N383	
R1	0761-0005	R: fxd, metallic oxide, 2.2K ohms ±5%, 1 W	
R2	0683-4735	R: fxd, comp, 47K ohms ±5%, 1/4 W	
R3	0683-2235	R: fxd, comp, 22K ohms ±5%, 1/4 W	
R4, R5	0683-4725	R: fxd, comp, 4.7K ohms ±5%, 1/4 W	
R6	0683-2235	R: fxd, comp, 22K ohms ±5%, 1/4 W	

See introduction to this section

Table 6-7. Gate Control Assy, 5212A-65D (designations prefixed A15) Cont'd

Circuit Reference	hp Stock No.	Description #	Note
R7	0761-0005	R: fxd, metallic oxide, 2.2K ohms ±5%, 1 W	
R8	0683-2705	R: fxd, comp, 27 ohms ±5%, 1/4 W	
R9, R10	0683-4735	R: fxd, comp, 47K ohms ±5%, 1/4 W	
R11	0683-1835	R: fxd, comp, 18K ohms ±5%, 1/4 W	
R12	0683-2435	R: fxd, comp, 24K ohms ±5%, 1/4 W	
R13		Not assigned	
R14	0683-1035	R: fxd, comp, 10K ohms ±5%, 1/4 W	
R15	0683-2225	R: fxd, comp, 2.2K ohms ±5%, 1/4 W	
R16, R17	0683-3335	R: fxd, comp, 33K ohms ±5%, 1/4 W	
R18	0683-4725	R: fxd, comp, 4.7K ohms ±5%, 1/4 W	
R19	0686-6825	R: fxd, comp, 6.8K ohms ±5%, 1/4 W	
R20	0683-3335	R: fxd, comp, 33K ohms ±5%, 1/4 W	
R21	0683-2745	R: fxd, comp, 270K ohms ±5%, 1/4 W	
R22	0683-3345	R: fxd, comp, 330K ohms ±5%, 1/4 W	
R23	0683-1045	R: fxd, comp, 100K ohms ±5%, 1/4 W	
R24	0683-2735	R: fxd, comp, 27K ohms ±5%, 1/4 W	
V1	2140-0022	Lamp, neon: NE2E	

Table 6-8. Sampling Control Assy, 5212A-65E (designations prefixed A16)

Circuit Reference	hp Stock No.	Description #	Note
C1	0140-0149	C: fxd, mica, 470 pf ±5%, 300 vdcw	
C2	0150-0121	C: fxd, cer, 0.1 μf +80% -20%, 50 vdcw	
C3	0180-0116	C: fxd, tantalum elect, 6.8 μf ±10%, 35 vdcw	
C4, C5	0140-0200	C: fxd, mica, 390 pf ±5%, 300 vdcw	
C6	0150-0014	C: fxd, cer, 0.005 μf, 500 vdcw	
C7	0140-0152	C: fxd, mica, 1000 pf ±5%, 300 vdcw	
C8	0180-0058	C: fxd, elect, 50 μf -10% +100%, 25 vdcw	
C9	0150-0014	C: fxd, cer, 0.005 μf, 500 vdcw	
C10	0180-0049	C: fxd, aluminum elect, 20 μf, 50 vdcw	
C11	0160-0155	C: fxd, my, 3300 pf ±10%	

See introduction to this section

Table 6-8. Sampling Control Assy, 5212A-65E (designations prefixed A16) Cont'd

Circuit Reference	hp Stock No.	Description #	Note
CR1	1901-0025	Diode, Si	
CR2	1901-0025	Diode, Si	
CR3 thru CR6	1910-0016	Diode, Ge: 60 PIV	
CR7	1902-0223	Diode, Si	
CR8, CR9	1901-0025	Diode, Si	
Q1	1850-0040	Transistor, Ge: PNP, type 2N383	
Q2	1850-0062	Transistor, Ge	
Q3	1850-0040	Transistor, Ge: PNP, type 2N383	
Q4, Q5	1850-0062	Transistor, Ge	
Q6	1850-0040	Transistor, Ge: PNP, type 2N383	
Q7	1851-0024	Transistor: NPN, type 2N388A	
R1	0686-5625	R: fxd, comp, 5.6K ohms ±5%, 1/2W	
R2 thru R4	0683-3325	R: fxd, comp, 3.3K ohms ±5%, 1/4W	
R5	0683-4735	R: fxd, comp, 47K ohms ±5%, 1/4W	
R6	0686-5625	R: fxd, comp, 5.6K ohms ±5%, 1/2W	
R7	0683-1035	R: fxd, comp, 10K ohms ±5%, 1/4W	
R8	0686-6825	R: fxd, comp, 6.8K ohms ±5%, 1/2W	
R9	0683-1035	R: fxd, comp, 10K ohms ±5%, 1/4W	
R10	0683-2735	R: fxd, comp, 27K ohms ±5%, 1/4W	
R11	0686-5625	R: fxd, comp, 5.6K ohms ±5%, 1/2W	
R12	0683-3325	R: fxd, comp, 3.3K ohms ±5%, 1/4W	
R13	0683-1535	R: fxd, comp, 15K ohms ±5%, 1/4W	
R14	0683-2435	R: fxd, comp, 24K ohms ±5%, 1/4W	
R15	0683-3915	R: fxd, comp, 390 ohms ±5%, 1/4W	
R16	0683-2225	R: fxd, comp, 2.2K ohms ±5%, 1/4W	
R17	0683-2735	R: fxd, comp, 27K ohms ±5%, 1/4W	
R18	0683-2725	R: fxd, comp, 2.7K ohms ±5%, 1/4W	
R19	0683-2225	R: fxd, comp, 2.2K ohms ±5%, 1/4W	
R20	0683-1225	R: fxd, comp, 1.2K ohms ±5%, 1/4W	
R21	0686-1025	R: fxd, comp, 1K ohms ±5%, 1/2W	
R22	0683-6835	R: fxd, comp, 68K ohms ±5%, 1/4W	
R23	0683-4725	R: fxd, comp, 4.7K ohms ±5%, 1/4W	
R24	0683-5625	R: fxd, comp, 5600 ohms ±5%, 1/4W	

See introduction to this section

Table 6-9. Power Supply Assy, 5212A-65G (designations prefixed A17)

Circuit Reference	hp Stock No.	Description #	Note
C1	0170-0024	C: fxd, my, 0.022 μf ±20%, 200 vdcw	
C2, C3	0180-0050	C: fxd, elect, 40 μf -15% +100%, 50 vdcw	
CR1 thru CR8	1901-0028	Diode, Si: 0.75 amp, 400 PIV	
CR9	1902-0148	Diode, Si	
Q1	1850-0062	Transistor, Ge	
R1	0689-3625	R: fxd, comp, 3.6K ohms ±5%, 1 W	
R2	0683-1245	R: fxd, comp, 120K ohms ±5%, 1/4 W	
R3	0683-1235	R: fxd, comp, 12K ohms ±5%, 1/4 W	
R4	0683-1025	R: fxd, comp, 1K ohms ±5%, 1/4 W	
R5	0813-0019	R: fxd, ww, 0.47 ohms ±10%, 1/2 W	
R6	0689-2225	R: fxd, comp, 2.2K ohms ±5%, 1 W	
R7	2100-0128	R: var, comp, 250 ohms ±20%, 1/4 W (for pc)	
R8	0683-4715	R: fxd, comp, 470 ohms ±5%, 1/4 W	
R9	0683-1225	R: fxd, comp, 1.2K ohms ±5%, 1/4 W	
R10	0686-3625	R: fxd, comp, 3.6K ohms ±5%, 1/2 W	
R11	0683-3615	R: fxd, comp, 360 ohms ±5%, 1/4 W	
R12, R13	0683-4705	R: fxd, comp, 47 ohms ±5%, 1/4 W	

See introduction to this section

Table 6-10. Replaceable Parts

hp Stock No.	Description #	Mfr.	Mfr. Part No.	TQ
10503A	Assy, Cable: 48" BNC to BNC	28480	10503A	1
5212A-9A	Transformer, Oscillator (includes R1, Fxd. comp, 10K ohms ±10%,1/2W)	28480	5212A-9A	1
5212A-65C	Decade Divider Assy	28480	5212A-65C	6
5212A-65D	Gate Control Assy	28480	5212A-65D	1
5212A-65E	Sampling Control Assy	28480	5212A-65E	1
5212A-65F	Oscillator Assy	28480	5212A-65F	1
5212A-65G	Power Supply Assy	28480	5212A-65G	1
5212A-85A	Air Filter Assy	28480	5212A-85A	1
5233L-44A	Kit: 3-1/2" Rackmount	28480	5233L-44A	1
05212-6005	Trigger Assy	28480	05212-6005	1
05214-6014	Amplifier Assy	28480	05214-6014	1
05212-6017	Decimal Counter Assy (5212A only)	28480	05212-6017	5
05512-6003	Decimal Counter Assy (5512A only)	28480	05512-6003	5
0130-0001	C: var, cer, 7-45 pf, 500 vdcw	72982	503-00002P0-33R	1
0140-0145	C: fxd, mica, 22 pf ±5%, 500 vdcw	28480	0140-0145	5
0140-0149	C: fxd, mica, 470 pf ±5%, 300 vdcw	72136	DM15471J	2
0140-0152	C: fxd, mica, 1000 pf ±5%, 300 vdcw	72136	DM16F102J	3
0140-0156	C: fxd, mica, 1500 pf ±5%, 300 vdcw	72136	DM19F12G-300V	2
0140-0190	C: fxd, mica, 39 pf ±5%, 300 vdcw	28480	0140-0190	5
0140-0192	C: fxd, mica, 68 pf ±5%, 300 vdcw	28480	0140-0192	5
0140-0193	C: fxd, mica, 82 pf ±5%, 300 vdcw	28480	0140-0193	15
0140-0194	C: fxd, mica, 110 pf ±5%, 300 vdcw	72136	DM15F111J-300V	19
0140-0195	C: fxd, mica, 130 pf ±5%, 300 vdcw	72136	DM15F131J-300V	29
0140-0196	C: fxd, mica, 150 pf ±5%, 300 vdcw	71236	DM15F151J-300V	18
0140-0197	C: fxd, mica, 180 pf ±5%, 300 vdcw	28480	0140-0197	10
0140-0198	C: fxd, mica, 200 pf ±5%, 300 vdcw	71236	DM15F201S-300V	14
0140-0199	C: fxd, mica, 240 pf ±5%, 300 vdcw	71236	DM15F241J-300V	7
0140-0200	C: fxd, mica, 390 pf ±5%, 300 vdcw	71236	DM15F391S-300V	11
0140-0204	C: fxd, mica, 47 pf ±5%, 300 vdcw	04062	RDM15E470J5L	5
0140-0217	C: fxd, mica, 140 pf ±5%, 300 vdcw	04062	DM15F1416-300V	5
0150-0014	C: fxd, cer, 0.005 μf, 500 vdcw	04222	D1-4	2
0150-0121	C: fxd, cer, 0.1 μf, +80% -20%, 50 vdcw	56289	5C50A	10
0160-0155	C: fxd, my, 3300 pf ±10%	28480	0160-0155	1
0160-2203	C: fxd, mica, 91 pf ±5%	28480	0160-2203	10
0160-2206	C: fxd, mica, 160 pf ±5%	28480	0160-2206	10
0170-0024	C: fxd, my, 0.022 μf ±20%, 200 vdcw	56289	192P22302	1
0170-0072	C: fxd, my, 1 μf ±10%, 200 vdcw	09134	1042	1
0170-0073	C: fxd, my, 1 μf ±10%, 600 vdcw	09134	1041	1
0180-0039	C: fxd, elect, 100 μf, 12 vdcw	56289	30D154A1	1
0180-0047	C: fxd, elect, 500 μf 75 vdcw	56289	D32443	1
0180-0049	C: fxd, alumimum elect, 20 μf, 50 vdcw	56289	30D1198A1	1

See list of abbreviations in introduction to this section

Table 6-10 Replaceable Parts (Cont'd)

hp Stock No.	Description #	Mfr.	Mfr. Part No.	TQ			
0180-0050	C: fxd, elect, 40 μf -15% +100%, 50 vdcw	56289	D32538	3			
0180-0058	C: fxd, elect, 50 μf -10% +100%, 25 vdcw	56289	30D186A1	2			
0180-0059	C: fxd, elect, 10 μf -10% +100%, 25 vdcw	56289	30D182A1	1			
0180-0063	C: fxd, elect, 500 μf -10% +100%, 3 vdcw	56289	30D120A1	1			
0180-0107	C: fxd, alumimum elect, 20 μf -10% +100%, 200 vdcw	56289	90803	2			
0180-0116	C: fxd, tant elect, 6.8 μf ±10%, 35 vdcw	56289	150D685X9035B2	1			
0370-0026	Knob: black, round, 1/4" w/arrow	28480	obd#	2			
0370-0077	Knob: black, bar type, 1/4" w/arrow	28480	obd#	1			
0410-0021	Crystal, quartz, 100 KC	00815	NE-13N	1			
0683-1025	R: fxd, comp, 1K ohms ±5%, 1/4W	01121	CB1025	3			
0683-1035	R: fxd, comp, 10K ohms ±5%, 1/4W	01121	CB1035	58			
0683-1045	R: fxd, comp, 100K ohms ±5%, 1/4W	01121	CB1045	21			
0683-1225	R: fxd, comp, 1.2K ohms ±5%, 1/4W	01121	CB1225	3			
0683-1235	R: fxd, comp, 12K ohms ±5%, 1/4W	01121	CB1235	1			
0683-1245	R: fxd, comp, 120K ohms ±5%, 1/4W	01121	CB1245	1			
0683-1325	R: fxd, comp, 1300 ohms ±5%, 1/4W	01121	CB1325	1			
0683-1515	R: fxd, comp, 150 ohms ±5%, 1/4W	01121	CB1515	1			
0683-1525	R: fxd, comp, 1500 ohms ±5%, 1/4W	01121	CB1525	1			
0683-1535	R: fxd, comp, 15K ohms ±5%, 1/4W	01121	CB1535	3			
0683-1545	R: fxd, comp, 150K ohms ±5%, 1/4W	01121	CB1545	1			
0683-1815	R: fxd, comp, 180 ohms ±5%, 1/4W	01121	CB1815	20			
0683-1825	R: fxd, comp, 1.8K ohms ±5%, 1/4W	01121	CB1825	1			
0683-1835	R: fxd, comp, 18K ohms ±5%, 1/4W	01121	CB1835	3			
0683-1845	R: fxd, comp, 180K ohms ±5%, 1/4W	01121	CB1845	1			
0683-2015	R: fxd, comp, 200 ohms ±5%, 1/4W	01121	CB2015	25			
0683-2025	R: fxd, comp, 2K ohms ±5%, 1/4W	01121	CB2025	5			
0683-2035	R: fxd, comp, 20K ohms ±5%, 1/4W	01121	CB2035	1			
0683-2225	R: fxd, comp, 2.2K ohms ±5%, 1/4W	01121	CB2225	4			
0683-2235	R: fxd, comp, 22K ohms ±5%, 1/4W	01121	CB2235	5			
0683-2245	R: fxd, comp, 220K ohms ±5%, 1/4W	01121	CB2245	1			
0683-2435	R; fxd, comp, 24K ohms ±5%, 1/4W	01121	CB2435	2			
0683-2705	R: fxd, comp, 27 ohms ±5%, 1/4W	01121	CB2705	2			
0683-2725	R: fxd, comp, 2.7K ohms ±5%, 1/4W	01121	CB2725	2			
0683-2735	R: fxd, comp, 27K ohms ±5%, 1/4W	01121	CB2735	4			

#See introduction to this section

Table 6-10 Replaceable Parts (Cont'd)

Stock No.	Description #	Mfr.	Mfr. Part No.	TQ		Note
0683-2745	R: fxd, comp, 270K ohms ±5%, 1/4W	01121	CB2745	6		a
				1		b
0683-3025	R: fxd, comp, 3K ohms ±5%, 1/4W	01121	CB3025	15		
0683-3325	R: fxd, comp, 3.3K ohms ±5%, 1/4W	01121	CB3325	4		
0683-3335	R: fxd, comp, 33K ohms ±5%, 1/4W	01121	CB3335	4		
0683-3345	R: fxd, comp, 330K ohms ±5%, 1/4W	01121	CB3345	4		
0683-3615	R: fxd, comp, 360 ohms ±5%, 1/4W	01121	CB3615	1		
0683-3915	R: fxd, comp, 390 ohms ±5%, 1/4W	01121	CB3915	7		
0683-3925	R: fxd, comp, 3.9K ohms ±5%, 1/4W	01121	CB3925	93		
0683-3935	R: fxd, comp, 39K ohms ±5%, 1/4W	01121	CB3935	2		
0683-3945	R: fxd, comp, 390K ohms ±5%, 1/4W	01121	CB3945	15		
0683-4705	R: fxd, comp, 47 ohms ±5%, 1/4W	01121	CB4705	4		
0683-4715	R: fxd, comp, 470 ohms ±5%, 1/4W	01121	CB4715	1		
0683-4725	R: fxd, comp, 4.7K ohms ±5%, 1/4W	01121	CB4725	4		
0683-4735	R: fxd, comp, 47K ohms ±5%, 1/4W	01121	CB4735	171		a
				167		b
0683-5625	R: fxd, comp, 5.6K ohms ±5%, 1/4W	01121	CB5625	2		
0683-5635	R: fxd, comp, 56K ohms ±5%, 1/4W	01121	CB5635	36		
0683-6815	R: fxd, comp, 680 ohms ±5%, 1/4W	01121	CB6815	1		
0683-6825	R: fxd, comp, 6.8K ohms ±5%, 1/4W	01121	CB6825	48		
0683-6835	R: fxd, comp, 68K ohms ±5%, 1/4W	01121	CB6835	14		
0683-8225	R: fxd, comp, 8.2K ohms ±5%, 1/4W	01121	CB8225	22		
0683-8235	R: fxd, comp, 82K ohms ±5%, 1/4W	01121	CB8235	5		
0684-2741	R: fxd, comp, 270K ohms ±10%, 1/4W	01121	CB2741	1		
0686-1025	R: fxd, comp, 1K ohms ±5%, 1/2W	01121	EB1025	1		
0686-3625	R: fxd, comp, 3.6K ohms ±5%, 1/2W	01121	EB3625	1		
0686-3925	R: fxd, comp, 3.9K ohms ±5%, 1/2W	01121	EB3925	1		
0686-4735	R: fxd, comp, 47K ohms ±5%, 1/2W	01121	EB4735	5		b
0686-5625	R: fxd, comp, 5.6K ohms ±5%, 1/2W	01121	EB5625	5		
0686-6225	R: fxd, comp, 6.2K ohms ±5%, 1/2W	01121	EB6225	1		
0686-6825	R: fxd, comp, 6.8K ohms ±5%, 1/2W	01121	EB6825	2		
0686-7525	R: fxd, comp, 7.5K ohms ±5%, 1/2W	01121	EB7525	40		
0689-2225	R: fxd, comp, 2.2K ohms ±5%, 1W	01121	GB2225	1		
0689-3625	R: fxd, comp, 3.6K ohms ±5%, 1W	01121	GB3625	1		
0689-5625	R: fxd, comp, 5.6K ohms ±5%, 1W	01121	GB5625	1		

#See introduction to this section

Table 6-10 Replaceable Parts (Cont'd)

Stock No.	Description#	Mfr.	Mfr. Part No.	TQ			
0760-0017	R: fxd, met film, 3900 ohms ±2%, 1W	07115	C32	1			
0761-0005	R: fxd, met oxide, 2.2K ohms ±5%, 1W	07115	C32	2			
0813-0019	R: fxd, ww, 0.47 ohms ±10%, 1/2W	75042	BW-1/2	1			
0816-0020	R: fxd, ww, 110 ohms ±10%, 10W	35434	C10-110	1			
1200-0028	Socket, crystal	91662	430BC	1			
1200-0043	Insulator, transistor	76530	29434	2			
1200-0044	Socket, transistor	83298	210-6400	1			
1200-0081	Bushing, transistor	83298	210-6300	2			
1205-0025	Nut heat sink	28480	1205-0025	2			
1205-0026	Heat sink body	28480	1205-0026				
1250-0083	Connector, female: BNC, type UG-1094/U	91737	8427	1			
1250-0118	Connector, female: BNC, type UG-1094A/U	91737	8427	1			
1251-0087	Connector, female: 50 pin minat	02660	57-40500	1			
1251-0135	Connector, pc: 15 pin	95354	SD-615UR special	15			
1251-0148	Connector, male: 3 pin	0000U	H-1061-1G-3L	1			
1400-0084	Fuseholder, 3 AG cartridge	75915	342014	2			
1450-0042	Lamp, neon: specially selected NE-2E	03797	1BG3-6980/Spec.	1			
1850-0037	Transistor: 2N274	02735	2N274	2			
1850-0040	Transistor: type 2N383	94154	2N383	5			
1850-0062	Transistor, Ge	49956	T51602	98			
1850-0070	Transistor: type 2N1373	87216	2N1373	1			
1850-0098	Transistor: Ge PNP	28480	1850-0098	1			
1851-0006	Transistor: type 2N169A	03508	2N169A	2			
1851-0024	Transistor: type 2N388A, NPN	11711	2N388A	1			
1854-0003	Transistor, Si	01281	PT1844	1			
1901-0025	Diode, Si	28480	obd#	46			
1901-0100	Diode, Si	28480	obd#	3			
1902-0148	Diode, Si	28480	obd#	1			
1902-0223	Diode, Si	28480	obd#	1			

#See introduction to this section

Table 6-10 Replaceable Parts (Cont'd)

Stock No.	Description #	Mfr.	Mfr. Part No.	TQ		Note
1902-0199	Diode, Si	28480	obd#	1		
1910-0015	Diode, Ge: 30 PIV	28480	obd#	30		
1910-0016	Diode, Ge: 60 PIV	28480	D2361	59		
1970-0002	Tube, electron: digital indicator, "Nixie"	83594	B55092	5		b
2100-0083	R: var, comp, 250K ohms ±30%, 1/4W	11237	RGC45	1		
2100-0128	R: var, comp, 250 ohms ±20%, 1/4W (for pc)	11237	UPE 70 obd#	1		
2100-0154	R: var, comp, lin, 1K ohms ±30%, 3/10W	11237	UPE 70 obd#	1		
2100-0273	R: var, comp, 3M ±20%, 1/4W	11237	VF-45	1		
2110-0001	Fuse, cartridge: 1 amp (for 115V operation)	75915	312001	1		
2110-0033	Fuse, 0.75 amp, 250V	75915	F02GR750A	1		
2110-0044	Fuse, cartridge: 0.5 amp (for 230V operation)	71400	3120012	1		
2140-0022	Lamp, neon: NE-2E	24455	NE-2E	50		
3100-0276	Switch, rot: 4 sect, 12 pos	76854	Type JK	1		
3101-0010	Switch, push: DPDT	82389	38-1407	1		
3101-0033	Switch, sl: DPDT	42190	4633	1		
3101-0036	Switch, tog: SPST	88140	C.H. 8280K16	1		
3101-0037	Switch, tog: SPST	04009	AH&H83050-A	1		
3101-0038	Switch, tog: DPDT	04009	AH&H83054-B	1		
3140-0030	Fan motor: 115V, 60 cycle	73793	35035	1		
3160-0027	Blade fan: aluminum, hub 5/16"	04870	obd#	1		
5000-0011	Crystal clip	28480	obd#	1		
8120-0078	Cable, power assy	70903	KH-4147	1		
9100-0139	Transformer, power	98734	61280	1		
9140-0027	Inductor, 35 μh ±10%	99848	1035-15-350	1		
	Note a = 5212A only Note b = 5512A only					

#See introduction to this section

Table 6-11. Code List of Manufacturers

The following code numbers are from the Federal Supply Code for Manufacturers Cataloging Handbooks H4-1 (Name to Code) and H4-2 (Code to Name) and their latest supplements. The date of revision and the date of the supplements used appear at the bottom of each page. Alphabetical codes have been arbitrarily assigned to suppliers not appearing in the H4 Handbooks.

Code No.	Manufacturer	Address
00000	U.S.A. Common	Any supplier of U.S.
00136	McCoy Electronics	Mount Holly Springs, Pa.
00213	Sage Electronics Corp.	Rochester, N.Y.
00287	Cemco Inc.	Danielson, Conn.
00334	Humidial	Colton, Calif.
00348	Microtron Co., Inc.	Valley Stream, N.Y.
00373	Garlock Inc., Electronics Products Div.	Camden, N.J.
00656	Aerovox Corp.	New Bedford, Mass.
00779	Amp. Inc.	Harrisburg, Pa.
00781	Aircraft Radio Corp.	Boonton, N.J.
00815	Northern Engineering Laboratories, Inc.	Burlington, Wis.
00853	Sangamo Electric Co., Pickens Div.	Pickens, S.C.
00866	Goe Engineering Co.	Los Angeles, Calif.
00891	Carl E. Holmes Corp.	Los Angeles, Calif.
00929	Microlab Inc.	Livingston, N.J.
01009	Alden Products Co.	Brockton, Mass.
01121	Allen Bradley Co.	Milwaukee, Wis.
01255	Litton Industries, Inc.	Beverly Hills, Calif.
01281	TRW Semiconductors, Inc.	Lawndale, Calif.
01295	Texas Instruments, Inc., Transistor Products Div.	Dallas, Texas
01349	The Alliance Mfg. Co.	Alliance, Ohio
01589	Pacific Relays, Inc.	Van Nuys, Calif.
01930	Amerock Corp.	Rockford, Ill.
01961	Pulse Engineering Co.	Santa Clara, Calif.
02114	Ferroxcube Corp. of America	Saugerties, N.Y.
02286	Cole Rubber and Plastics Inc.	Sunnyvale, Calif.
02660	Amphenol-Borg Electronics Corp.	Chicago, Ill.
02735	Radio Corp. of America, Semiconductor and Materials Div.	Somerville, N.J.
02771	Vocaline Co. of America, Inc.	Old Saybrook, Conn.
02777	Hopkins Engineering Co.	San Fernando, Calif.
03508	G.E. Semiconductor Prod. Dept.	Syracuse, N.Y.
03705	Apex Machine & Tool Co.	Dayton, Ohio
03797	Eldema Corp.	Compton, Calif.
03877	Transitron Electric Corp.	Wakefield, Mass.
03888	Pyrofilm Resistor Co., Inc.	Cedar Knolls, N.J.
03954	Singer Co., Diehl Div. Finderne Plant	Sumerville, N.J.
04009	Arrow, Hart and Hegeman Elect. Co.	Hartford, Conn.
04013	Taurus Corp.	Lambertville, N.J.
04222	Hi-Q Division of Aerovox	Myrtle Beach, S.C.
04354	Precision Paper Tube Co.	Chicago, Ill.
04404	Dymec Division of Hewlett-Packard Co.	Palo Alto, Calif.
04651	Sylvania Electric Products, Microwave Device Div.	Mountain View, Calif.
04713	Motorola, Inc., Semiconductor Prod. Div.	Phoenix, Arizona
04732	Filtron Co., Inc. Western Div.	Culver City, Calif.
04773	Automatic Electric Co.	Northlake, Ill.
04796	Sequoia Wire Co.	Redwood City, Calif.
04811	Precision Coil Spring Co.	El Monte, Calif.
04870	P.M. Motor Company	Westchester, Ill.
05006	Twentieth Century Plastics, Inc.	Los Angeles, Calif.
05277	Westinghouse Electric Corp. Semi-Conductor Dept.	Youngwood, Pa.
05347	Ultronix, Inc.	San Mateo, Calif.
05593	Illumitronic Engineering Co.	Sunnyvale, Calif.
05616	Cosmo Plastic (c/o Electrical Spec. Co.)	Cleveland, Ohio
05624	Barber Colman Co.	Rockford, Ill.
05728	Tiffen Optical Co.	Roslyn Heights, Long Island, N.Y.
05729	Metro-Tel Corp.	Westbury, N.Y.
05783	Stewart Engineering Co.	Santa Cruz, Calif.
05820	Wakefield Engineering Inc.	Wakefield, Mass.
06004	Bassick Co., The	Bridgeport, Conn.
06090	Raychem Corp.	Redwood City, Calif.
06175	Bausch and Lomb Optical Co.	Rochester, N.Y.
06402	E.T.A. Products Co. of America	Chicago, Ill.
06540	Amatom Electronic Hardware Co., Inc.	New Rochelle, N.Y.
06555	Beede Electrical Instrument Co., Inc.	Penacook, N.H.
06666	General Devices Co., Inc.	Indianapolis, Ind.
06751	Semcor Div. Components Inc.	Phoenix, Ariz.
06812	Torrington Mfg. Co., West Div.	Van Nuys, Calif.
06980	Varian Assoc. Eimac Div.	San Carlos, Calif.
07088	Kelvin Electric Co.	Van Nuys, Calif.
07126	Digitran Co.	Pasadena, Calif.
07137	Transistor Electronics Corp.	Minneapolis, Minn.
07138	Westinghouse Electric Corp. Electronic Tube Div.	Elmira, N.Y.
07149	Filmohm Corp.	New York, N.Y.
07233	Cinch-Graphik Co.	City of Industry, Calif.
07261	Avnet Corp.	Culver City, Calif.
07263	Fairchild Camera & Inst. Corp. Semiconductor Div.	Mountain View, Calif.
07322	Minnesota Rubber Co.	Minneapolis, Minn.
07387	Birtcher Corp., The	Monterey Park, Calif.
07700	Technical Wire Products Inc.	Cranford, N.J.
07910	Continental Device Corp.	Hawthorne, Calif.
07933	Raytheon Mfg. Co., Semiconductor Div.	Mountain View, Calif.
07966	Shockley Semi-Conductor Laboratories	Palo Alto, Calif.
07980	Hewlett-Packard Co., Boonton Radio Div.	Rockaway, N.J.
08145	U.S. Engineering Co.	Los Angeles, Calif.
08289	Blinn, Delbert Co.	Pomona, Calif.
08358	Burgess Battery Co.	Niagara Falls, Ontario, Canada
08664	Bristol Co., The	Waterbury, Conn.
08717	Sloan Company	Sun Valley, Calif.
08718	ITT Cannon Electric Inc., Phoenix Div.	Phoenix, Arizona
08792	CBS Electronics Semiconductor Operations, Div of C.B.S. Inc.	Lowell, Mass.
08984	Mel-Rain	Indianapolis, Ind.
09026	Babcock Relays Div.	Costa Mesa, Calif.
09134	Texas Capacitor Co.	Houston, Texas
09145	Atohm Electronics	Sun Valley, Calif.
09250	Electro Assemblies, Inc.	Chicago, Ill.
09569	Mallory Battery Co. of Canada, Ltd.	Toronto, Ontario, Canada
10214	General Transistor Western Corp.	Los Angeles, Calif.
10411	Ti-Tal, Inc.	Berkeley, Calif.
10646	Carborundum Co.	Niagara Falls, N.Y.
11236	CTS of Berne, Inc.	Berne, Ind.
11237	Chicago Telephone of California, Inc.	So. Pasadena, Calif.
11242	Bay State Electronics Corp.	Waltham, Mass.
11312	Teledyne Inc., Microwave Div.	Palo Alto, Calif.
11534	Duncan Electronics Inc.	Costa Mesa, Calif.
11711	General Instrument Corp., Semiconductor Div., Products Group	Newark, N.J.
11717	Imperial Electronic, Inc.	Buena Park, Calif.
11870	Melabs, Inc.	Palo Alto, Calif.
12136	Philadelphia Handle Co.	Camden, N.J.
12697	Clarostat Mfg. Co.	Dover, N.H.
12859	Nippon Electric Co., Ltd.	Tokyo, Japan
12881	Metex Electronics Corp.	Clark, N.J.
12930	Delta Semiconductor Inc.	Newport Beach, Calif.
12954	Dickson Electronics Corp.	Scottsdale, Arizona
13103	Thermolloy	Dallas, Texas
13396	Telefunken (GmbH)	Hanover, Germany
13835	Midland-Wright Div. of Pacific Industries, Inc.	Kansas City, Kansas
14099	Sem-Tech	Newbury Park, Calif.
14193	Calif. Resistor Corp.	Santa Monica, Calif.
14298	American Components, Inc.	Conshohocken, Pa.
14433	ITT Semiconductor, A Div. of Int. Telephone & Telegraph Corp.	West Palm Beach, Fla.
14493	Hewlett-Packard Company	Loveland, Colo.
14655	Cornell Dublier Electric Corp.	Newark, N.J.
14674	Corning Glass Works	Corning, N.Y.
14752	Electro Cube Inc.	So. Pasadena, Calif.
14960	Williams Mfg. Co.	San Jose, Calif.
15203	Webster Electronics Co.	New York, N.Y.
15291	Adjustable Bushing Co.	N. Hollywood, Calif.
15558	Micron Electronics	Garden City, Long Island, N.Y.
15566	Amprobe Inst. Corp.	Lynbrook, N.Y.
15772	Twentieth Century Coil Spring Co.	Santa Clara, Calif.
15818	Amelco Inc.	Mt. View, Calif.
15909	Daven Div. Thomas A. Edison Ind. McGraw-Edison Co.	Long Island City, N.Y.
16037	Spruce Pine Mica Co.	Spruce Pine, N.C.
16179	Omni-Spectra Inc.	Detroit, Ill.
16352	Computer Diode Corp.	Lodi, N.J.
16688	Ideal Prec. Meter Co., Inc. De Jur Meter Div.	Brooklyn, N.Y.
16758	Delco Radio Div. of G.M. Corp.	Kokomo, Inc.
17109	Thermonetics Inc.	Canoga Park, Calif.
17474	Tranex Company	Mountain View, Calif.
17675	Hamlin Metal Products Corp.	Akron, Ohio
17745	Angstrohm Prec. Inc.	No. Hollywood, Calif.
18042	Power Design Pacific Inc.	Palo Alto, Calif.
18476	Ty-Car Mfg. Co., Inc.	Holliston, Mass.
18486	TRW Elect. Comp. Div.	Des Plaines, Ill.
18583	Curtis Instrument, Inc.	Mt. Kisco, N.Y.
18873	E.I. DuPont and Co., Inc.	Wilmington, Del.
18911	Durant Mfg. Co.	Milwaukee, Wis.
19315	Bendix Corp., The Eclipse-Poineer Div.	Teterboro, N.J.
19500	Thomas A. Edison Industries, Div. of McGraw-Edison Co.	West Orange, N.J.
19644	LRC Electronics	Horseheads, N.Y.
19701	Electra Mfg. Co.	Independence, Kansas
20183	General Atronics Corp.	Philadelphia, Pa.
21226	Executone, Inc.	Long Island City, N.Y.
21335	Fafnir Bearing Co., The	New Britain, Conn.
21520	Fansteel Metallurgical Corp.	N. Chicago, Ill.
23783	British Radio Electronics Ltd.	Washington, D.C.
24455	G.E. Lamp Division	Nela Park, Cleveland, Ohio
24655	General Radio Co.	West Concord, Mass.
26365	Gries Reproducer Corp.	New Rochelle, N.Y.
26462	Grobet File Co. of America, Inc.	Carlstadt, N.J.
26992	Hamilton Watch Co.	Lancaster, Pa.
28480	Hewlett-Packard Co.	Palo Alto, Calif.
33173	G.E. Receiving Tube Dept.	Owensboro, Ky.
35434	Lectrohm Inc.	Chicago, Ill.
36196	Stanwyck Coil Products Ltd.	Hawkesbury, Ontario, Canada
37942	P.R. Mallory & Co. Inc.	Indianapolis, Ind.
39543	Mechanical Industries Prod. Co.	Akron, Ohio
40920	Miniature Precision Bearings, Inc.	Keene, N.H.
42190	Muter Co.	Chicago, Ill.
43990	C.A. Norgren Co.	Englewood, Colo.

00015-42
Revised: July, 1966

From: FSC. Handbook Supplements
H4-1 Dated JULY 1965
H4-2 Dated NOV 1962

Table 6-11. Code List of Manufacturers (Cont'd)

Code No.	Manufacturer	Address
44655	Ohmite Mfg. Co.	Skokie, Ill.
46384	Penn Eng. & Mfg. Corp.	Doylestown, Pa.
47904	Polaroid Corp.	Cambridge, Mass.
48620	Precision Thermometer & Inst. Co.	Southampton, Pa.
49956	Microwave & Power Tube Div.	Waltham, Mass.
52090	Rowan Controller Co.	Westminster, Md.
52983	Sanborn Company	Waltham, Mass.
54294	Shallcross Mfg. Co.	Selma, N.C.
55026	Simpson Electric Co.	Chicago, Ill.
55933	Sonotone Corp.	Elmsford, N.Y.
55938	Raytheon Co. Commercial Apparatus & Systems Div.	So. Norwalk, Conn.
56137	Spaulding Fibre Co., Inc.	Tonawanda, N.Y.
56289	Sprague Electric Co.	North Adams, Mass.
59446	Telex, Inc.	St. Paul, Minn.
59730	Thomas & Betts Co.	Elizabeth, N.J.
60741	Triplett Electrical Inst. Co.	Bluffton, Ohio
61775	Union Switch and Signal, Div. of Westinghouse Air Brake Co.	Pittsburgh, Pa.
62119	Universal Electric Co.	Owosso, Mich.
63743	Ward-Leonard Electric Co.	Mt. Vernon, N.Y.
64959	Western Electric Co., Inc.	New York, N.Y.
65092	Weston Inst. Inc. Weston-Newark	Newark, N.J.
66295	Wittek Mfg. Co.	Chicago, Ill.
66346	Revere Wollansak Div. Minn. Mining & Mfg. Co.	St. Paul, Minn.
70276	Allen Mfg. Co.	Hartford, Conn.
70318	Allmetal Screw Product Co., Inc.	Garden City, N.Y.
70485	Atlantic India Rubber Works, Inc.	Chicago, Ill.
70563	Amperite Co., Inc.	Union City, N.J.
70903	Belden Mfg. Co.	Chicago, Ill.
70998	Bird Electronic Corp.	Cleveland, Ohio
71002	Birnbach Radio Co.	New York, N.Y.
71041	Boston Gear Works Div. of Murray Co. of Texas	Quincy, Mass.
71218	Bud Radio, Inc.	Willoughby, Ohio
71286	Camloc Fastener Corp.	Paramus, N.J.
71313	Cardwell Condenser Corp.	Lindenhurst L.I., N.Y.
71400	Bussmann Mfg. Div. of McGraw-Edison Co.	St. Louis, Mo.
71436	Chicago Condenser Corp.	Chicago, Ill.
71447	Calif. Spring Co., Inc.	Pico-Rivera, Calif.
71450	CTS Corp.	Elkhart, Ind.
71468	ITT Cannon Electric Inc.	Los Angeles, Calif.
71471	Cinema Plant, Hi-Q Div. Aerovox Corp.	Burbank, Calif.
71482	C.P. Clare & Co.	Chicago, Ill.
71590	Centralab Div. of Globe Union Inc.	Milwaukee, Wis.
71616	Commercial Plastics Co.	Chicago, Ill.
71700	Cornish Wire Co., The	New York, N.Y.
71707	Coto Coil Co., Inc.	Providence, R.I.
71744	Chicago Miniature Lamp Works	Chicago, Ill.
71753	A.O. Smith Corp., Crowley Div.	West Orange, N.J.
71785	Cinch Mfg. Co., Howard B. Jones Div.	Chicago, Ill.
71984	Dow Corning Corp.	Midland, Mich.
72136	Electro Motive Mfg. Co., Inc.	Willimantic, Conn.
72354	John E. Fast Co., Div. Victoreen Instr. Co.	Chicago, Ill.
72619	Dialight Corp.	Brooklyn, N.Y.
72656	Indiana General Corp., Electronics Div.	Keasby, N.J.
72699	General Instrument Corp., Cap. Div.	Newark, N.J.
72765	Drake Mfg. Co.	Chicago, Ill.
72825	Hugh H. Eby Inc.	Philadelphia, Pa.
72928	Gudeman Co.	Chicago, Ill.
72964	Robert M. Hadley Co.	Los Angeles, Calif.
72982	Erie Technological Products, Inc.	Erie, Pa.
73061	Hansen Mfg. Co., Inc.	Princeton, Ind.
73076	H.M. Harper Co.	Chicago, Ill.
73138	Helipot Div. of Beckman Inst., Inc.	Fullerton, Calif.
73293	Hughes Products Division of Hughes Aircraft Co.	Newport Beach, Calif.
73445	Amperex Electronic Co., Div. of North American Phillips Co., Inc.	Hicksville, N.Y.
73506	Bradley Semiconductor Corp.	New Haven, Conn.
73559	Carling Electric, Inc.	Hartford, Conn.
73682	George K. Garrett Co., Div. MSL Industries Inc.	Philadelphia, Pa.
73734	Federal Screw Products Inc.	Chicago, Ill.
73743	Fischer Special Mfg. Co.	Cincinnati, Ohio
73793	General Industries Co., The	Elyria, Ohio
73846	Goshen Stamping & Tool Co.	Goshen, Ind.
73899	JFD Electronics Corp.	Brooklyn, N.Y.
73905	Jennings Radio Mfg. Corp.	San Jose, Calif.
74276	Signalite Inc.	Neptune, N.J.
74455	J.H. Winns, and Sons	Winchester, Mass.
74861	Industrial Condenser Corp.	Chicago, Ill.
74868	R.F. Products Division of Amphenol-Borg Electronics Corp.	Danbury, Conn.
74970	E.F. Johnson Co.	Waseca, Minn.
75042	International Resistance Co.	Philadelphia, Pa.
75378	CTS Knights Inc.	Sandwich, Ill.
75382	Kulka Electric Corporation	Mt. Vernon, N.Y.
75818	Lenz Electric Mfg. Co.	Chicago, Ill.
75915	Littlefuse, Inc.	Des Plaines, Ill.
76005	Lord Mfg. Co.	Erie, Pa.
76210	C.W. Marwedel	San Francisco, Calif.
76487	James Millen Mfg. Co., Inc.	Malden, Mass.
76493	J.W. Miller Co.	Los Angeles, Calif.
76530	Cinch-Monadnock, Div. of United Carr Fastener Corp.	San Leandro, Calif.
76545	Mueller Electric Co.	Cleveland, Ohio
76703	National Union	Newark, N.J.
76854	Oak Manufacturing Co.	Crystal Lake, Ill.
77068	Bendix Corp., The Bendix Pacific Div.	N. Hollywood, Calif.
77075	Pacific Metals Co.	San Francisco, Calif.
77221	Phanostran Instrument and Electronic Co.	South Pasadena, Calif.
77252	Philadelphia Steel and Wire Corp.	Philadelphia, Pa.
77342	American Machine & Foundry Co. Potter & Brumfield Div.	Princeton, Ind.
77630	TRW Electronic Components Div.	Camden, N.J.
77638	General Instrument Corp., Rectifier Div.	Brooklyn, N.Y.
77764	Resistance Products Co.	Harrisburg, Pa.
77969	Rubbercraft Corp. of Calif.	Torrance, Calif.
78189	Shakeproof Division of Illinois Tool Works	Elgin, Ill.
78283	Signal Indicator Corp.	New York, N.Y.
78290	Struthers-Dunn Inc.	Pitman, N.J.
78452	Thompson-Bremer & Co.	Chicago, Ill.
78471	Tilley Mfg. Co.	San Francisco, Calif.
78488	Stackpole Carbon Co.	St. Marys, Pa.
78493	Standard Thomson Corp.	Waltham, Mass.
78553	Tinnerman Products, Inc.	Cleveland, Ohio
78790	Transformer Engineers	San Gabriel, Calif.
78947	Ucinite Co.	Newtonville, Mass.
79136	Waldes Kohinoor Inc.	Long Island City, N.Y.
79142	Veeder Root, Inc.	Hartford, Conn.
79251	Wenco Mfg. Co.	Chicago, Ill.
79727	Continental-Wirt Electronics Corp.	Philadelphia, Pa.
79963	Zierick Mfg. Corp.	New Rochelle, N.Y.
80031	Mepco Division of Sessions Clock Co.	Morristown, N.J.
80120	Schnitzer Alloy Products Co.	Elizabeth, N.J.
80130	Times Telephoto Equipment	New York, N.Y.
80131	Electronic Industries Association. Any brand Tube meeting EIA Standards-Washington, DC.	
80207	Unimax Switch, Div. Maxon Electronics Corp.	Wallingford, Conn.
80223	United Transformer Corp.	New York, N.Y.
80248	Oxford Electric Corp.	Chicago, Ill.
80294	Bourns Inc.	Riverside, Calif.
80411	Acro Div. of Robertshaw Controls Co.	Columbus, Ohio
80486	All Star Products Inc.	Defiance, Ohio
80509	Avery Adhesive Label Corp.	Monrovia, Calif.
80583	Hammarlund Co., Inc.	New York, N.Y.
80640	Stevens, Arnold, Co., Inc.	Boston, Mass.
81030	International Instruments Inc.	Orange, Conn.
81073	Grayhill Co.	LaGrange, Ill.
81095	Triad Transformer Corp.	Venice, Calif.
81312	Winchester Elec. Div. Litton Ind., Inc.	Oakville, Conn.
81349	Military Specification	. . . . .
81483	International Rectifier Corp.	El Segundo, Calif.
81541	Airpax Electronics, Inc.	Cambridge, Mass.
81860	Barry Controls, Div. Barry Wright Corp.	Watertown, Mass.
82042	Carter Precision Electric Co.	Skokie, Ill.
82047	Sperti Faraday Inc., Copper Hewitt Electric Div.	Hoboken, N.J.
82142	Jeffers Electronics Division of Speer Carbon Co.	Du Bois, Pa.
82170	Fairchild Camera & Inst. Corp., Defense Prod. Division	Clifton, N.J.
82209	Maguire Industries, Inc.	Greenwich, Conn.
82219	Sylvania Electric Prod. Inc. Electronic Tube Division	Emporium, Pa.
82376	Astron Corp.	East Newark, Harrison, N.J.
82389	Switchcraft, Inc.	Chicago, Ill.
82647	Metals & Controls Inc. Spencer Products	Attleboro, Mass.
82768	Phillips-Advance Control Co.	Joliet, Ill.
82866	Research Products Corp.	Madison, Wis.
82877	Rotron Mfg. Co., Inc.	Woodstock, N.Y.
82893	Vector Electronic Co.	Glendale, Calif.
83053	Western Washer Mfg. Co.	Los Angeles, Calif.
83058	Carr Fastener Co.	Cambridge, Mass.
83086	New Hampshire Ball Bearing, Inc.	Peterborough, N.H.
83125	General Instrument Corp., Capacitor Div.	Darlington, S.C.
83148	ITT Wire and Cable Div.	Los Angeles, Calif.
83186	Victory Engineering Corp.	Springfield, N.J.
83298	Bendix Corp., Red Bank Div.	Red Bank, N.J.
83315	Hubbell Corp.	Mundelein, Ill.
83330	Smith, Herman H., Inc.	Brooklyn, N.Y.
83385	Central Screw Co.	Chicago, Ill.
83501	Gavitt Wire and Cable Co. Div. of Amerace Corp.	Brookfield, Mass.
83594	Burroughs Corp. Electronic Tube Div.	Plainfield, N.J.
83740	Union Carbide Corp. Consumer Prod. Div.	New York, N.Y.
83777	Model Eng. and Mfg., Inc.	Huntington, Ind.
83821	Loyd Scruggs Co.	Festus, Mo.
83942	Aeronautical Inst. & Radio Co.	Lodi, N.J.
84171	Arco Electronics Inc.	Great Neck, N.Y.
84396	A.J. Glesener Co., Inc.	San Francisco, Calif.
84411	TRW Capacitor Div.	Ogallala, Neb.
84970	Sarkes Tarzian, Inc.	Bloomington, Ind.
85454	Boonton Molding Company	Boonton, N.J.

From: FSC. Handbook Supplements
H4-1 Dated JULY 1965
H4-2 Dated NOV. 1962

00015-42
Revised: July, 1966

Table 6-11. Code List of Manufacturers (Cont'd)

Code No.	Manufacturer	Address
85471	A.B. Boyd Co.	San Francisco, Calif.
85474	R.M. Bracamonte & Co.	San Francisco, Calif.
85660	Koiled Kords, Inc.	Hamden, Conn.
85911	Seamless Rubber Co.	Chicago, Ill.
86197	Clifton Precision Products Co., Inc.	Clifton Heights, Pa.
86579	Precision Rubber Products Corp.	Dayton, Ohio
86684	Radio Corp. of America, Electronic Comp. & Devices Div.	Harrison, N.J.
87034	Marco Industries	Anaheim, Calif.
87216	Philco Corporation (Lansdale Division)	Lansdale, Pa.
87473	Western Fibrous Glass Products Co.	San Francisco, Calif.
87664	Van Waters & Rogers Inc.	San Francisco, Calif.
87930	Tower Mfg. Corp.	Providence, R.I.
88140	Cutler-Hammer, Inc.	Lincoln, Ill.
88220	Gould-National Batteries, Inc.	St. Paul, Minn.
88421	Federal Telephone & Radio Corp.	Clifton, N.J.
88698	General Mills, Inc.	Buffalo, N.Y.
89231	Graybar Electric Co.	Oakland, Calif.
89665	United Transformer Co.	Chicago, Ill.
90179	US Rubber Co., Consumer Ind. & Plastics Prod. Div.	Passaic, N.J.
90970	Bearing Engineering Co.	San Francisco, Calif.
91260	Connor Spring Mfg. Co.	San Francisco, Calif.
91345	Miller Dial & Nameplate Co.	El Monte, Calif.
91418	Radio Materials Co.	Chicago, Ill.
91506	Augat Inc.	Attleboro, Mass.
91637	Dale Electronics, Inc.	Columbus, Nebr.
91662	Elco Corp.	Willow Grove, Pa.
91737	Gremar Mfg. Co., Inc.	Wakefield, Mass.
91827	K F Development Co.	Redwood City, Calif.
91929	Honeywell Inc., Micro Switch Div.	Freeport, Ill.
91961	Nahm-Bros. Spring Co.	Oakland, Calif.
92180	Tru-Connector Corp.	Peabody, Mass.
92367	Elgeet Optical Co. Inc.	Rochester, N.Y.
92196	Universal Industries, Inc.	City of Industry, Calif.
92607	Tensolite Insulated Wire Co., Inc.	Tarrytown, N.Y.
93332	Sylvania Electric Prod. Inc. Semiconductor Div.	Woburn, Mass.
93369	Robbins and Myers, Inc.	New York, N.Y.
93410	Stevens Mfg. Co., Inc.	Mansfield, Ohio
93929	G.V. Controls	Livingston, N.J.
94137	General Cable Corp.	Bayonne, N.J.
94144	Raytheon Co., Comp. Div., Ind. Comp. Operations	Quincy, Mass.
94148	Scientific Electronics Products, Inc.	Loveland, Colo.
94154	Tung-Sol Electric, Inc.	Newark, N.J.
94197	Curtiss-Wright Corp. Electronics Div.	East Paterson, N.J.
94222	South Chester Corp.	Chester, Pa.
94310	Tru-Ohm Products Memcor Components Div.	Huntington, Ind.
94330	Wire Cloth Products, Inc.	Bellwood, Ill.
94682	Worcester Pressed Aluminum Corp.	Worcester, Mass.
94696	Magnecraft Electric Co.	Chicago, Ill.
95023	George A. Philbrick Researchers, Inc.	Boston, Mass.
95236	Allies Products Corp.	Miami, Fla.
95238	Continental Connector Corp.	Woodside, N.Y.
95263	Leecraft Mfg. Co., Inc.	Long Island, N.Y.
95264	Lerco Electronics, Inc.	Burbank, Calif.
95265	National Coil Co.	Sheridan, Wyo.
95275	Vitramon, Inc.	Bridgeport, Conn.
95348	Gordos Corp.	Bloomfield, N.J.
95354	Methode Mfg. Co.	Chicago, Ill.
95712	Dage Electric Co., Inc.	Franklin, Ind.
95984	Siemon Mfg. Co.	Wayne, Ill.
95987	Weckesser Co.	Chicago, Ill.
96067	Huggins Laboratories	Sunnyvale, Calif.
96095	Hi-Q Div. of Aerovox Corp.	Olean, N.Y.
96256	Thordarson-Meissner Inc.	Mt. Carmel, Ill.
96296	Solar Manufacturing Co.	Los Angeles, Calif.
96330	Carlton Screw Co.	Chicago, Ill.
96341	Microwave Associates, Inc.	Burlington, Mass.
96501	Excel Transformer Co.	Oakland, Calif.
97464	Industrial Retaining Ring Co.	Irvington, N.J.
97539	Automatic & Precision Mfg.	Englewood, N.J.
97979	Reon Resistor Corp.	Yonkers, N.Y.
97983	Litton System Inc., Adler-Westrex Commun. Div.	New Rochelle, N.Y.
98141	R-Troncis, Inc.	Jamaica, N.Y.
98159	Rubber Teck, Inc.	Gardena, Calif.
98220	Hewlett-Packard Co., Moseley Div.	Pasadena, Calif.
98278	Microdot, Inc.	So. Pasadena, Calif.
98291	Sealectro Corp.	Mamaroneck, N.Y.
98376	Zero Mfg. Co.	Burbank, Calif.
98731	General Mills Inc., Electronics Div.	Minneapolis, Minn.
98734	Paeco Div. of Hewlett-Packard Co.	Palo Alto, Calif.
98821	North Hills Electronics, Inc.	Glen Cove, N.Y.
98978	International Electronic Research Corp.	Burbank, Calif.
99109	Columbia Technical Corp.	New York, N.Y.
99313	Varian Associates	Palo Alto, Calif.
99378	Atlee Corp.	Winchester, Mass.
99515	Marshall Ind. Elect. Products Div.	San Marino, Calif.
99707	Control Switch Division, Controls Co. of America	El Segundo, Calif.
99800	Delevan Electronics Corp.	East Aurora, N.Y.
99848	Wilco Corporation	Indianapolis, Ind.
99934	Renbrandt, Inc.	Boston, Mass.
99942	Hoffman Electronics Corp. Semiconductor Div.	El Monte, Calif.
99957	Technology Instrument Corp. of Calif.	Newbury Park, Calif.

THE FOLLOWING HP VENDORS HAVE NO NUMBER ASSIGNED IN THE LATEST SUPPLEMENT TO THE FEDERAL SUPPLY CODE FOR MANUFACTURERS HANDBOOK.

0000F	Malco Tool and Die	Los Angeles, Calif.
0000M	Western Coil Div. of Automatic Ind., Inc.	Redwood City, Calif.
0000Z	Willow Leather Products Corp.	Newark, N.J.
000AA	British Radio Electronics Ltd.	Washington, D.C.
000AB	ETA	England
000BB	Precision Instrument Components Co.	Van Nuys, Calif.
000MM	Rubber Eng. & Development	Hayward, Calif.
000NN	A "N" D Mfg. Co.	San Jose, Calif.
000QQ	Cooltron	Oakland, Calif.
000WW	California Eastern Lab.	Burlington, Calif.
000YY	S.K. Smith Co.	Los Angeles, Calif.

From: FSC. Handbook Supplements
H4-1 Dated JULY 1965
H4-2 Dated NOV. 1962

00015-42
Revised: July, 1966

APPENDIX I - MANUAL CHANGES

Newer Instruments: As changes are made, newer instruments may have serial number prefixes not listed in this manual. The manuals for these instruments will be supplied with an added "Manual Changes" sheet with the required information. If this sheet is missing, contact your nearest Hewlett-Packard Sales and Service Office. Lists are included at the back of this manual.

This manual applies directly to Model 5212A/5512A Electronic Counters with serial prefix 648. With the following changes, this manual applies to 5212A/5512A counters. With serial prefix numbers 632, 608, 519, 450, 426, 422, 306, 247, 219, 207, 152, 144, 131, and 123.

To adapt this manual to instruments with serial number prefixes below 648, make the following changes:

Instrument Serial No. Prefix	Change No.
632 (5512A)	2
632 (5212A)	1
608 (5512A)	2, 3
608 (5212A)	1, 3
519 (5512A)	2, 3, 4
519 (5212A)	1, 3, 4
450 (5512A)	2, 3, 4, 5
450 (5212A)	1, 3, 4, 5
426, 422 (5512A)	2, 3, 4, 5, 6
426, 422 (5212A)	1, 3, 4, 5, 6
306, 247, 244 (5512A)	2, 3, 5, 6, 7
306, 247, 244 (5212A)	1, 3, 5, 6, 7
219 (5512A)	2, 3, 5, 6, 7, 8
219 (5212A)	1, 3, 5, 6, 7, 8
207, 206 (5512A)	2, 3, 5, 6, 7, 8, 9
207, 206 (5212A)	1, 3, 5, 6, 7, 8, 9
152, 144 (5512A)	2, 3, 5, 6, 7, 8, 9, 10
152, 144 (5212A)	1, 3, 5, 6, 7, 8, 9, 10
131, 123 (5512A)	2, 3, 5, 6, 7, 8, 9, 10, 11
131, 123 (5212A)	1, 3, 5, 6, 7, 8, 9, 10, 11

CHANGE 1: (5212A only)

Figure 5-9, Table 6-4:

Replace Figure 5-9 05212-6017 with Figure IA-1 5212A-4A.

Replace Table 6-4, 05212-6017 with Table IA-1 5212A-4A/5512A-4A.

CHANGE 2: (5512A only)

Figure 5-9, Table 6-4:

Replace Figure 5-9, 05512-6003 with Figure IA-2 5512A-4A.

Replace Table 6-4, 05512-6003 with Table IA-1 5212A-4A/5512A-4A.

CHANGE 3:

(608-) Figure 5-5, Oscillator Assembly:

A8A4: Change from 18K ohms to 22K ohms.

A8R8: Change from 1200 ohms to 1800 ohms.

A8R14: Change from 20K ohms to 22K ohms.

Table 6-5:

A8R4 (0683-1835): Change to R: fxd, comp, 22K ohms ±5%, 1/4W, HP Part No. 0683-2235.

A8R8 (0683-1525): Change to R: fxd, comp, 1200 ohms ±5%, 1/4W, HP Part No. 0683-1825.

A8R14 (0683-2035): Change to R: fxd, comp, 22K ohms ±5%, 1/4W, HP Part No. 0683-2235.

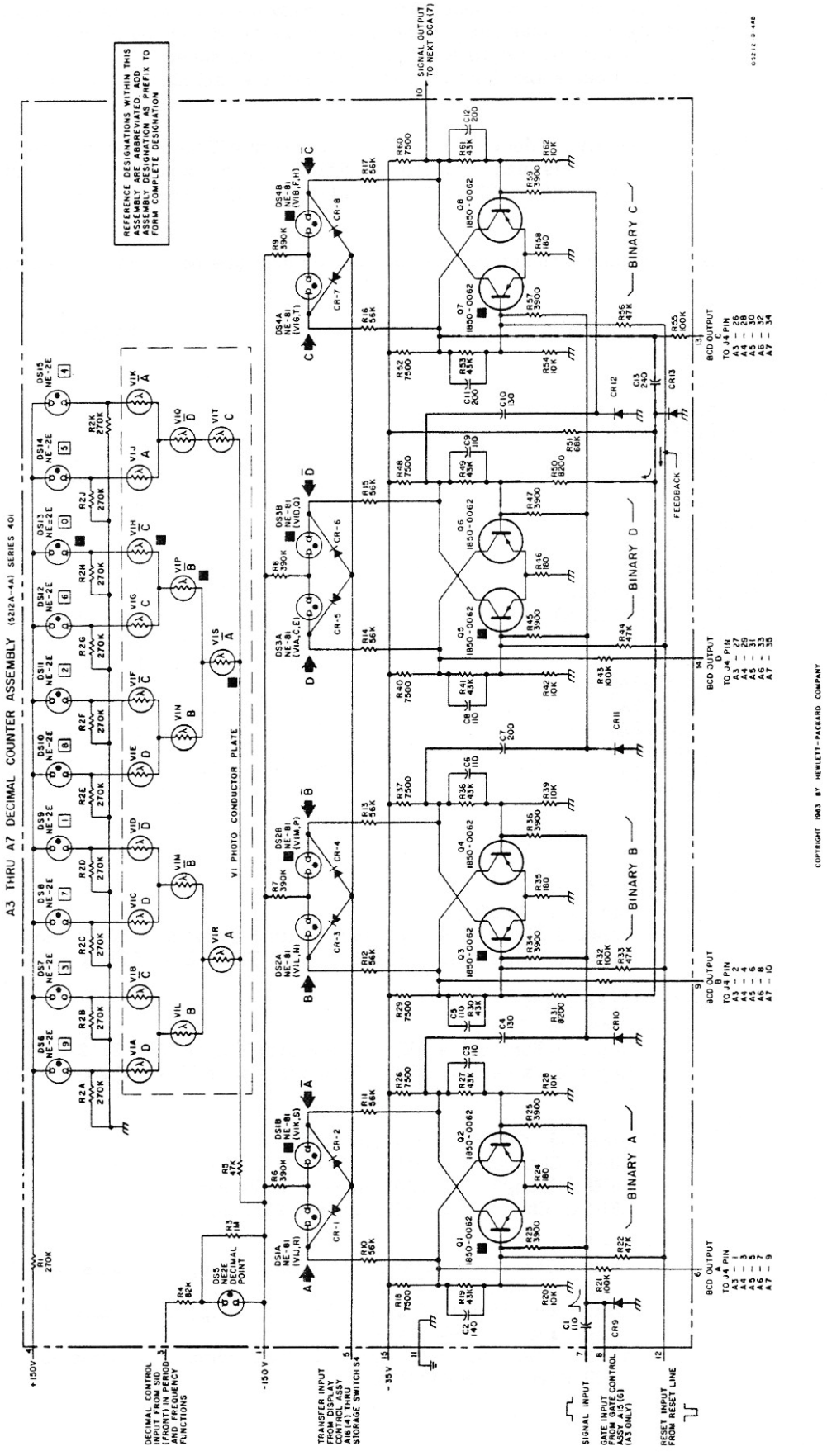

Figure IA-1. 300 kc Decimal Counter Assembly

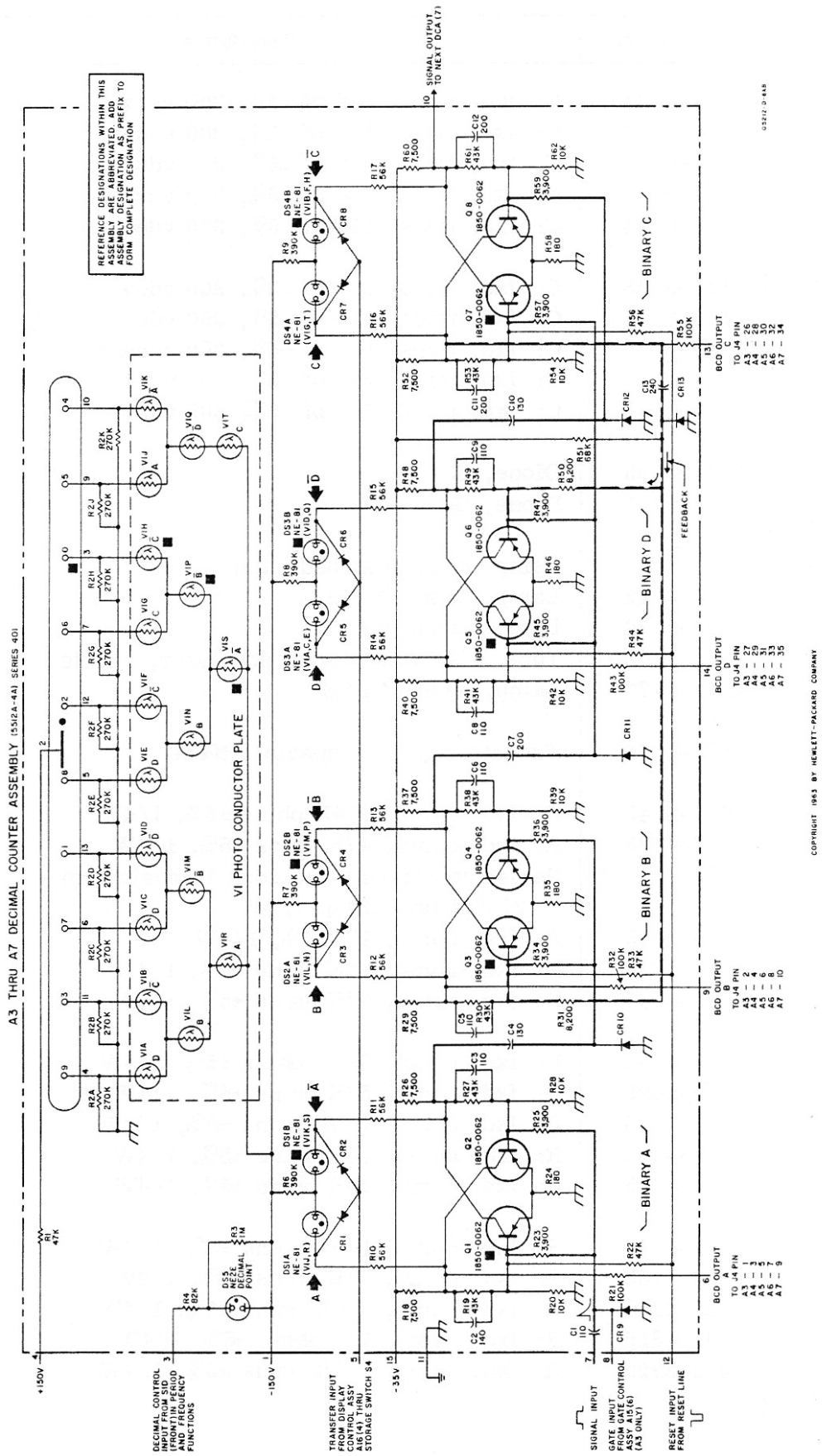

Figure IA-2. 300 kc Decimal Counter Assembly

Table IA-1. Decimal Counter Assy, 5212A-4A/5512A-4A (designations prefixed A3-A7)

Circuit Reference	ⓗⓟ Stock No.	Description	Note
C1	0140-0194	C: fxd, mica, 110 pf ±5%, 300 vdcw	
C2	0140-0217	C: fxd, mica, 140 pf ±2%, 300 vdcw	
C3	0140-0194	C: fxd, mica, 110 pf ±5%, 300 vdcw	
C4	0140-0195	C: fxd, mica, 130 pf ±5%, 300 vdcw	
C5, C6	0140-0194	C: fxd, mica, 110 pf ±5%, 300 vdcw	
C7	0140-0198	C: fxd, mica, 200 pf ±5%, 300 vdcw	
C8, C9	0140-0194	C: fxd, mica, 110 pf ±5%, 300 vdcw	
C10	0140-0195	C: fxd, mica, 130 pf ±5%, 300 vdcw	
C11, C12	0140-0198	C: fxd, mica, 200 pf ±5%, 300 vdcw	
C13	0140-0199	C: fxd, mica, 240 pf ±5%, 300 vdcw	
CR1 thru CR8	1901-0025	Diode, Si	
CR9 thru CR13	1910-0015	Diode, Ge	
DS1 thru DS4		Lamp, neon (matched pair)	c
DS5	2140-0022	Lamp, neon: NE2E	
DS6	2140-0022	Lamp, neon: NE2E	a
DS6	1970-0002	Tube, electron: digital indicator, "Nixie"	b
DS7 thru DS15	2140-0022	Lamp, neon: NE2E	a
Q1 thru Q8	1850-0062	Transistor, Ge: (special 2N404)	
R1	0683-2745	R: fxd, comp, 270K ohms ±5%, 1/4W	a
	0686-4735	R: fxd, comp, 47K ohms ±5%, 1/2W	b
R2		Resistive network (includes 10 resistors) 270K ohms ±20%, 1/4W	c
R3	0683-1055	R: fxd, comp, 1M ±5%, 1/4W	
R4	0683-8235	R: fxd, comp, 82K ohms ±5%, 1/4W	
R5	0683-4735	R: fxd, comp, 47K ohms ±5%, 1/4W	a
R6 thru R9	0683-3945	R: fxd, comp, 390K ohms ±5%, 1/4W	
R10 thru R17	0683-5635	R: fxd, comp, 56K ohms ±5%, 1/4W	
R18	0686-7525	R: fxd, comp, 7.5K ohms ±5%, 1/2W	
R19	0683-4335	R: fxd, comp, 43K ohms ±5%, 1/4W	
R20	0683-1035	R: fxd, comp, 10K ohms ±5%, 1/4W	
R21	0683-1045	R: fxd, comp, 100K ohms ±5%, 1/4W	
R22	0683-4735	R: fxd, comp, 47K ohms ±5%, 1/4W	
R23	0683-3925	R: fxd, comp, 3.9K ohms ±5%, 1/4W	
R24	0683-1815	R: fxd, comp, 180 ohms ±5%, 1/4W	
R25	0683-3925	R: fxd, comp, 3.9K ohms ±5%, 1/4W	

Table IA-1. Decimal Counter Assy, 5212A-4A/5512A-4A (designations prefixed A3-A7) Cont'd

Circuit Reference	Stock No.	Description	Note
R26	0686-7525	R: fxd, comp, 7.5K ohms ±5%, 1/2 W	
R27	0683-4335	R: fxd, comp, 43K ohms ±5%, 1/4 W	
R28	0683-1035	R: fxd, comp, 10K ohms ±5%, 1/4 W	
R29	0686-7525	R: fxd, comp, 7.5K ohms ±5%, 1/2 W	
R30	0683-4335	R: fxd, comp, 43K ohms ±5%, 1/4 W	
R31	0683-8225	R: fxd, comp, 8.2K ohms ±5%, 1/4 W	
R32	0683-1045	R: fxd, comp, 100K ohms ±5%, 1/4 W	
R33	0683-4735	R: fxd, comp, 47K ohms ±5%, 1/4 W	
R34	0683-3925	R: fxd, comp, 3.9K ohms ±5%, 1/4 W	
R35	0683-1815	R: fxd, comp, 180 ohms ±5%, 1/4 W	
R36	0683-3925	R: fxd, comp, 3.9K ohms ±5%, 1/4 W	
R37	0686-7525	R: fxd, comp, 7.5K ohms ±5%, 1/2 W	
R38	0683-4335	R: fxd, comp, 43K ohms ±5%, 1/4 W	
R39	0683-1035	R: fxd, comp, 10K ohms ±5%, 1/4 W	
R40	0686-7525	R: fxd, comp, 7.5K ohms ±5%, 1/2 W	
R41	0683-4335	R: fxd, comp, 43K ohms ±5%, 1/4 W	
R42	0683-1035	R: fxd, comp, 10K ohms ±5%, 1/4 W	
R43	0683-1045	R: fxd, comp, 100K ohms ±5%, 1/4 W	
R44	0683-4735	R: fxd, comp, 47K ohms ±5%, 1/4 W	
R45	0683-3925	R: fxd, comp, 3.9K ohms ±5%, 1/4 W	
R46	0683-1815	R: fxd, comp, 180 ohms ±5%, 1/4 W	
R47	0683-3925	R: fxd, comp, 3.9K ohms ±5%, 1/4 W	
R48	0686-7525	R: fxd, comp, 7.5K ohms ±5%, 1/2 W	
R49	0683-4335	R: fxd, comp, 43K ohms ±5%, 1/4 W	
R50	0683-8225	R: fxd, comp, 8.2K ohms ±5%, 1/4 W	
R51	0683-6835	R: fxd, comp, 68K ohms ±5%, 1/4 W	
R52	0686-7525	R: fxd, comp, 7.5K ohms ±5%, 1/2 W	
R53	0683-4335	R: fxd, comp, 43K ohms ±5%, 1/4 W	
R54	0683-1035	R: fxd, comp, 10K ohms ±5%, 1/4 W	
R55	0683-1045	R: fxd, comp, 100K ohms ±5%, 1/4 W	
R56	0683-4735	R: fxd, comp, 47K ohms ±5%, 1/4 W	
R57	0683-3925	R: fxd, comp, 3.9K ohms ±5%, 1/4 W	
R58	0683-1815	R: fxd, comp, 180 ohms ±5%, 1/4 W	
R59	0683-3925	R: fxd, comp, 3.9K ohms ±5%, 1/4 W	
R60	0686-7525	R: fxd, comp, 7.5K ohms ±5%, 1/2 W	

Table IA-1. Decimal Counter Assembly, 5212A-4A/5512A-4A (designations prefixed A3-A7)

Circuit Reference	hp Stock No.	Description	Note
R61	0683-4335	R: fxd, comp, 43K ohms ±5%, 1/4W	
	0683-1035	R: fxd, comp, 10K ohms ±5%, 1/4W	
V1		Plate, photoconductor	c
		MISCELLANEOUS	
	5212A-83A	Plate, numeral	a
		Note a - 5212A only Note b - 5512A only Note c - Not field replaceable Part of Readout Block Assembly (05212-6010)	

CHANGE 4:

(519) Figure 5-4, Amplifier Assembly A1 and Trigger Assembly A2:

A2R1: Change from 33K ohms to 47K ohms.
A2R2: Change from 200 ohms to 820 ohms.
A2R5: Change from 15K ohms to 5.6K ohms.
A2R6: Change from 1300 ohms to 2.2K ohms.
A2C3: Change from 220 pf to 1500 pf.

Table 6-3 and 6-10:

A2R1 (0683-3335): Change to R: fxd, comp, 47K ohms ±5%, 1/4W, HP Part No. 0683-4735.
A2R2 (0683-2015): Change to R: fxd, comp, 820 ohms ±5%, 1/4W, HP Part No. 0683-8215.
A2R5 (0683-1535): Change to R: fxd, comp, 5.6K ohms ±5%, 1/4W, HP Part No. 0683-5625.
A2R6 (0683-1325): Change to R: fxd, comp, 2.2K ohms ±5%, 1/4W, HP Part No. 0683-2225.
A2C3 (0140-0221): Change to C: fxd, mica, 1500 pf ±2%, 300 vdcw, HP Part No. 0140-0156.

CHANGE 5:

(450) C3 Oscillator Frequency adjust mounted on chassis instead of rear panel. Access to C3 is made by removing the top cover.

CHANGE 6:

(422, 426) Figure 5-8, A16 Display Control Assembly. See partial schematic, Figure IA-3, and make the following changes:

A16R2 - change from 3.3K ohms to 47K ohms.
A16R9 - change from 10K ohms to 15K ohms.
A16R10 - change from 27K ohms to 22K ohms.
A16Q1, A16Q3 - change from 1850-0040 to 1850-0062.
A16C11 - delete.
A16CR9 - delete.
A16R4 - delete.

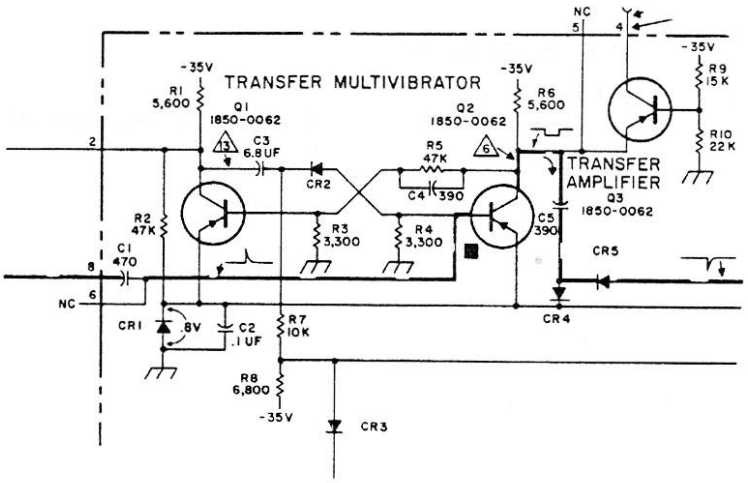

Figure IA-3. A16 Display Control Assembly

CHANGE 6 (Cont'd):

(422, 426) Table 6-8 and 6-10,
A16Q1, A16Q3 (1850-0040) - change to Transistor, Ge: PNP, selected, ⓗⓟ Part No. 1850-0062.
A16R2 (0683-3325) - change to R: fxd, comp, 47K ohms 5%, 1/4 W, ⓗⓟ Part No. 0683-4735.
A16R9 (0683-1035) - change to R: fxd, comp, 15K ohms 5%, 1/4 W, ⓗⓟ Part No. 0683- 1535.
A16R10 (0683-2735) - change to R: fxd, comp, 22K ohms 5%, 1/4 W, ⓗⓟ Part No. 0683-2235.
A16C11 (0160-0155) - delete.
A16R24 (0683-5625) - delete.
A16CR9 - delete.

CHANGE 7:

(244, 247, 306) Figure 5-4, A1 Amplfifier Assembly and A2 Trigger Assembly:
Substitute Figure IA-4 for Figure 5-4.

Table 6-2 and 6-10,
A1 substitute Table A1-1 for A1 Parts list Tables 6-2 and 6-10.

Table 6-3 and 6-10,
A2 substitute Table A1-2 for A2 Parts list Tables 6-3 and 6-10.

CHANGE 8:

(219) Figure 5-7, Tables 6-1 and 6-10,
Print command lead from A15-Pin 8 - change to A16-Pin 8
C9 (0140-0152) - delete.

CHANGE 9:

(206, 207) This version has side frames and rear panel which are not interchangeable with those of later models.

CHANGE 10:

(144, 152) Delete connection from DS5 to -150V line.
Add connection from DS5 to Pin 2 of DCA and label "-150V from A17 (3)".

CHANGE 11:

(123, 131) Figure 5-4,
Change A2R1 from 47K to 56K.

Figures 5-9 and 5-10,
Change R4 on A3-A7 from 82K to 68K, DS5 on A3-A7 from NE2E to NE2H.

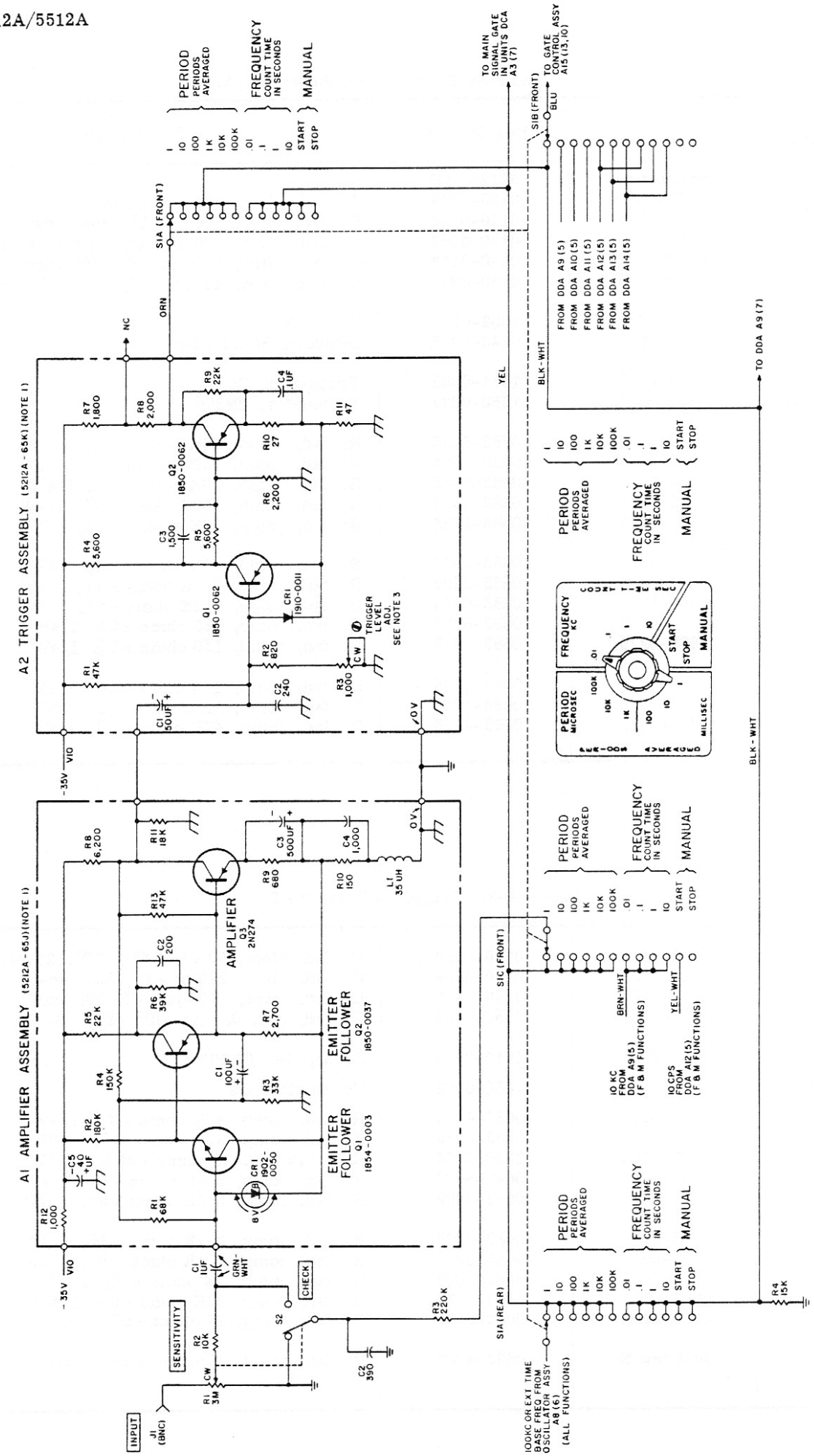

Figure IA-4. A1 Amplifier Assembly & A2 Trigger Assembly

Table IA-2. Amplifier Assembly A1

Reference Designator	Old Part No.	New Part No.	Description
A1	05214-6014	5212A-65J	
A1C1	0180-0050	0180-0039	C: fxd, elect, 100 μf, 12 vdcw
A1C2	0180-0039	0140-0198	C: fxd, mica, 200 pf ± 5%, 300 vdcw
A1C3	0180-0198	0180-0063	C: fxd, elect, 500 μf -10% +100%, 3 vdcw
A1C4	0140-0063	0140-0152	C: fxd, mica, 1000 pf ± 5%, 300 vdcw
A1C5	0140-0152	0180-0050	C: fxd, elect, 40 μf -15% +100%, 50 vdcw
A1CR1	1902-0050	1902-0199	Diode, Si
A1L1	9140-0027	0140-0027	Inductor, 35 μf ± 10%
A1Q1	1854-0003	1854-0003	Transistor, Si
A1Q2, A2Q3	1850-0037	1850-0037	Transistor, 2N274
A1R1	0683-1025	0683-6835	R: fxd, comp, 68K ohms ± 5%, 1/4 W
A1R2	0683-6835	0683-1845	R: fxd, comp, 180K ohms ± 5%, 1/4W
A1R3	0683-1845	0683-3335	R: fxd, comp, 33K ohms ± 5%, 1/4W
A1R4	0683-1545	0683-1545	R: fxd, comp, 150K ohms ± 5%, 1/4W
A1R5	0683-3335	0683-2235	R: fxd, comp, 22K ohms, ± 5%, 1/4W
A1R6	0683-2235	0683-3935	R: fxd, comp, 39K ohms ± 5%, 1/4W
A1R7	0683-2725	0683-2725	R: fxd, comp, 2.7K ohms ± 5%, 1/4W
A1R8	0683-3935	0686-6225	R: fxd, comp, 6.2K ohms ± 5%, 1/4W
A1R9	0683-4735	0683-6815	R: fxd, comp, 680 ohms ± 5%, 1/4W
A1R10	0686-6225	0683-1515	R: fxd, comp, 150 ohms ± 5%, 1/4W
A1R11	0683-6815	0683-1835	R: fxd, comp, 18K ohms ± 5%, 1/4W
A1R12	0683-1515	0683-1025	R: fxd, comp, 1K ohms ± 5%, 1/4W
A1R13	0683-1835	0683-4735	R: fxd, comp, 47K ohms ± 5%, 1/4W

Table IA-3. Trigger Assembly A2

A2C1	0180-0058	0180-0058	C: fxd, elect, 50 ± f -10% +100%, 25 vdcw
A2C2	0140-0199	0140-0199	C: fxd, mica, 240 pf ± 5%, 300 vdcw
A2C3	0140-0156	0140-0156	C: fxd, mica, 1500 pf ± 2%, 300 vdcw
A2C4	0150-0121	0150-0121	C: fxd, cer, 0.1 μf +80% -20%, 50 vdcw
A2CR1	1910-0011	1910-0011	Diode, Ge: 60 PIV
A2Q1, Q2	1850-0062	1850-0062	Transistor, Ge
A2R1	0683-4735	0683-4735	R: fxd, comp, 47K ohms ± 5%, 1/4W
A2R2	0683-8215	0683-8215	R: fxd, comp, 820 ohms ± 5%, 1/4W
A2R3	2100-0154	2100-0154	R: comp, lin, 1K ohms ± 30%, 3/10W
A2R4	0683-5625	0683-5625	R: fxd, comp, 5.6K ohms ± 5%, 1/2W
A2R5	0683-5625	0683-5625	R: fxd, comp, 5.6K ohms ± 5%, 1/4W
A2R6	0683-2225	0683-2225	R: fxd, comp, 2.2K ohms ± 5%, 1/4W
A2R7	0760-0017	0686-1825	R: fxd, comp, 1.8K ohms ± 5%, 1/2W
A2R8	0683-2705	0686-2025	R: fxd, comp, 2K ohms ± 5%, 1/2W
A2R9	0683-4705	0683-2235	R: fxd, comp, 22K ohms ± 5%, 1/4W
A2R10	0683-2235	0683-2705	R: fxd, comp, 27 ohms ± 5%, 1/4W
A2R11	Add new No.	0683-4705	R: fxd, comp, 47 ohms ± 5%, 1/4W

APPENDIX II - OPTION 02 AND 03

The 5212A/5512A Option 02 instruments use decimal counters with a +1248 four-line code. The 5212A/5512A Option 03 instruments use decimal counters with a -1248 four-line code. Schematic for both options for 5212A is shown in Figure IIA-1, and Parts list is given in Table IIA-1. Schematic for both options for 5512A is shown in Figure IIA-2, and Parts list is given in Table IIA-2. The same schematic is used for Option 02 +1248 BCD Output and Option 03 - 1248 BCD output. The boards are identical with one exception. The DCA's with a "1" state positive BCD output have resistors marked with a double asterisk (**) connected to collectors as shown by — + —+ — lines. The DCA's with "1" state negative BCD output have these resistors connected to opposite collectors as shown by — - — - — lines.

Digit	1-2-4-8 Code Truth Table 4-Line Code, 1-2-4-8			
	D = 8	C = 4	B = 2	A = 1
0	0	0	0	0
1	0	0	0	1
2	0	0	1	0
3	0	0	1	1
4	0	1	0	0
5	0	1	0	1
6	0	1	1	0
7	0	1	1	1
8	1	0	0	0
9	1	0	0	1

OPTION 02: Output Code: 0 = -28 V, 1 = -2 V

OPTION 03: Output Code: 1 = -28 V, 0 = -2V

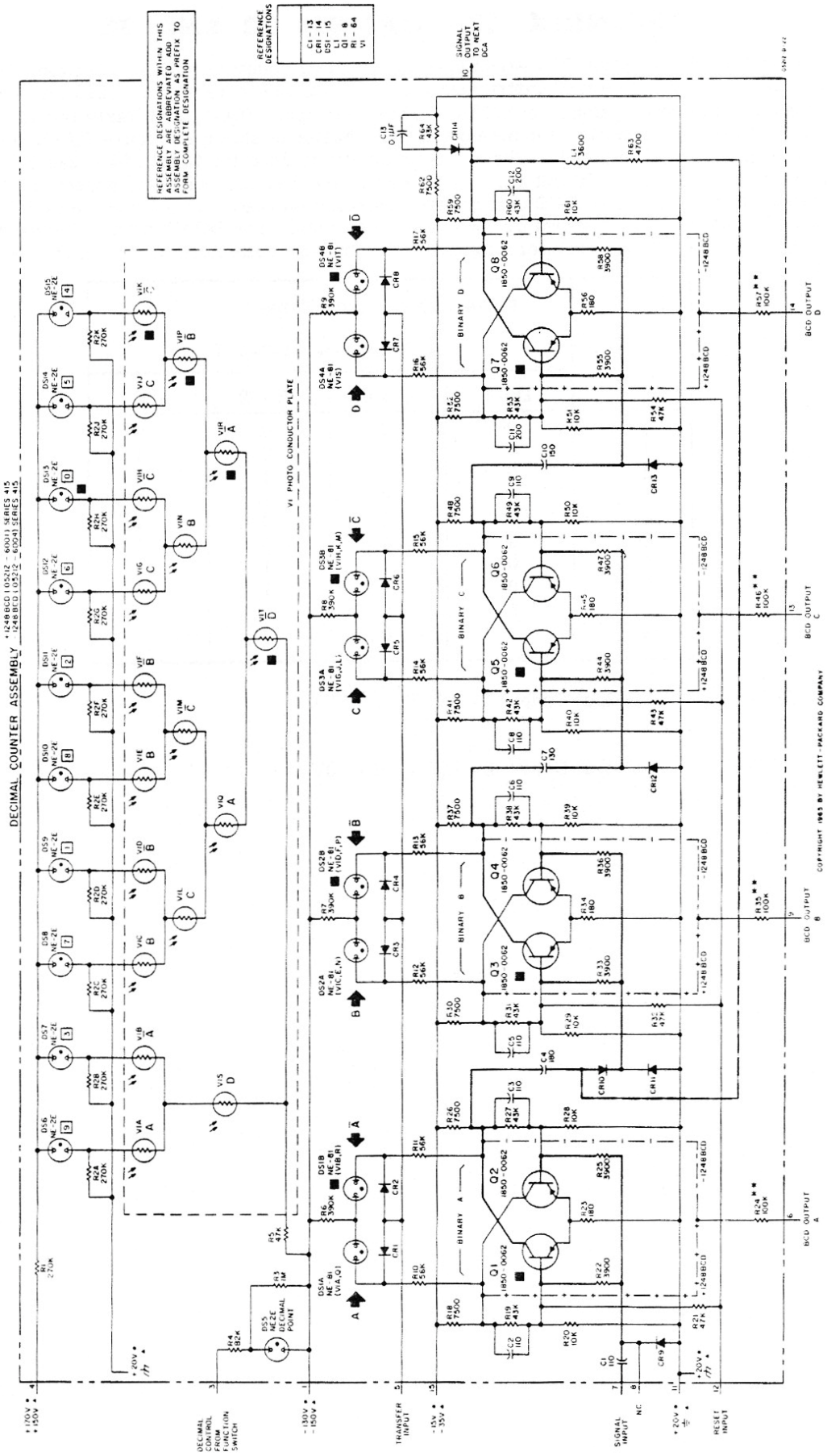

Figure IIA-1. Option 02 and Option 03 (Model 5212A)

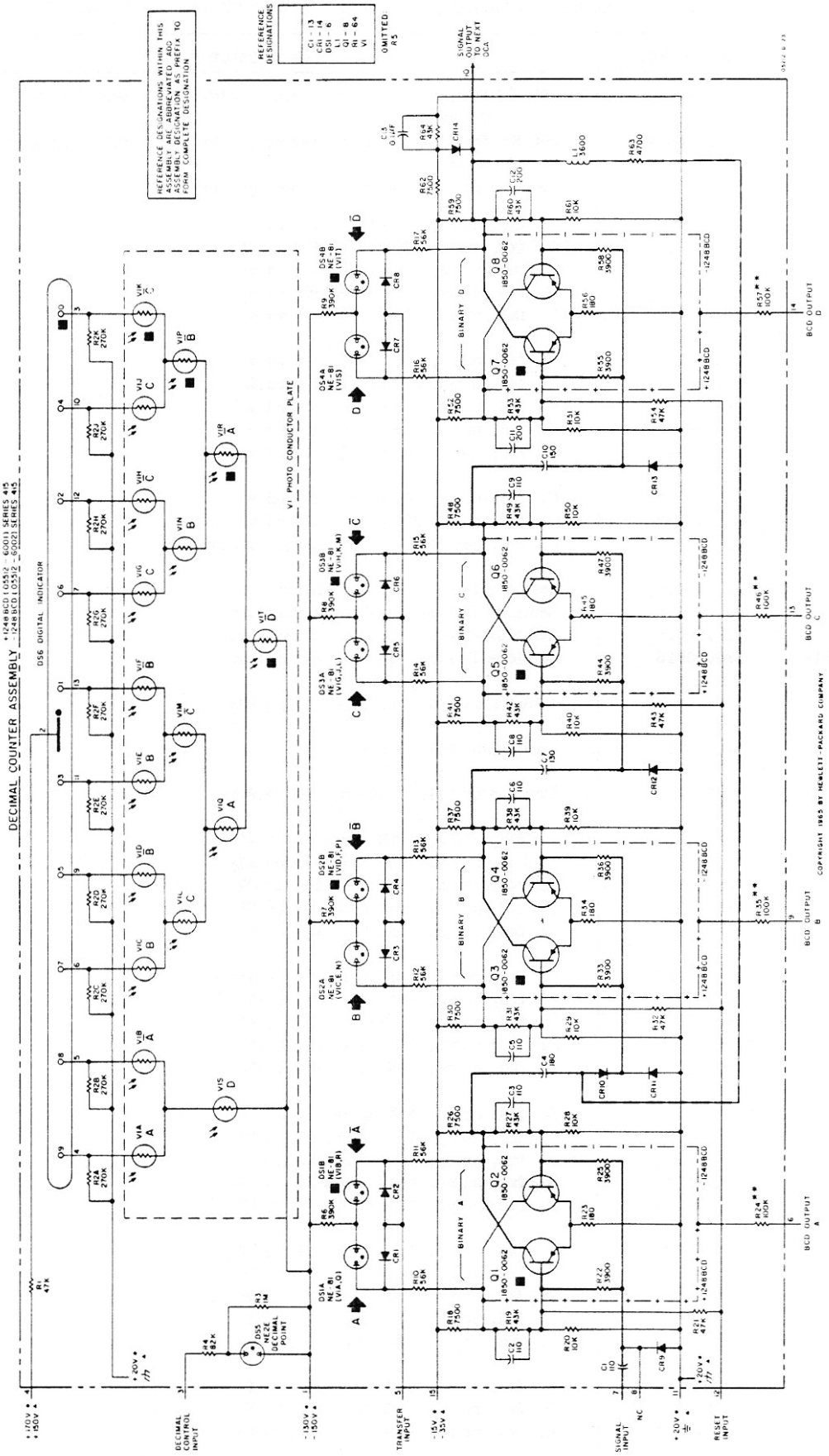

Figure IIA-2. Option 02 and Option 03 (Model 5512A)

Table IIA-1. Reference Designation Index, Option 02 and 03 (Model 5212A)

Reference Designation	hp Stock No.	Description #	Note
	05212-6001	300 KC Decimal Counter Assembly with 1248 1 State Positive BCD Output	
	05212-6004	300 KC Decimal Counter Assembly with 1248 1 State Negative BCD Output	
		Readout Block Assembly, Order by Description	
C1	0140-0194	C: fxd, mica, 110 pf 5%, 300 vdcw	
C2	0140-0217	C: fxd, mica, 140 pf 2%, 300 vdcw	
C3	0140-0194	C: fxd, mica, 110 pf 5%, 300 vdcw	
C4	0140-0197	C: fxd, mica, 180 pf 5%, 300 vdcw	
C5	0140-0194	C: fxd, mica, 110 pf 5%, 300 vdcw	
C6	0140-0194	C: fxd, mica, 110 pf 5%, 300 vdcw	
C7	0140-0195	C: fxd, mica, 130 pf 5%, 300 vdcw	
C8	0140-0194	C: fxd, mica, 110 pf 5%, 300 vdcw	
C9	0140-0194	C: fxd, mica, 110 pf 5%, 300 vdcw	
C10	0140-0196	C: fxd, mica, 150 pf 5%, 300 vdcw	
C11	0140-0198	C: fxd, mica, 200 pf 5%, 300 vdcw	
C12	0140-0198	C: fxd, mica, 200 pf 5%, 300 vdcw	
C13	0150-0121	C: fxd, cer, 0.1 μf +80% -20%, 50 vdcw	
CR1 thru CR8	1901-0025	Semicon Device: Diode, Silicon	
CR9	1910-0015	Semicon Device: Diode, Germanium	
CR10	1910-0016	Semicon Device: Diode, Germanium	
CR11 thru CR14	1910-0015	Semicon Device: Diode, Germanium	
DS1 thru DS15		NSR Part of Readout Block Assembly	
L1	9140-0161	Coil: fxd, 3600 μh 5%	
Q1 thru Q8	1850-0062	Transistor: Germanium, SPL 2N404	
R1	0683-2745	R: fxd, comp, 270K ohms 5%, 1/4W	
R2		NSR Part of Readout Block Assembly	
R3	0683-1055	R: fxd, comp, 1 megohm 5%, 1/4W	
R4	0683-8235	R: fxd, comp, 82K ohms 5%, 1/4W	
R5	0683-4735	R: fxd, comp, 47K ohms 5%, 1/4W	
R6 thru R9	0683-3945	R: fxd, comp, 390K ohms 5%, 1/4W	
R10 thru R17	0683-5635	R: fxd, comp, 56K ohms 5%, 1/4W	
R18	0686-7525	R: fxd, comp, 7500 ohms 5%, 1/2W	
R19	0683-4335	R: fxd, comp, 43K ohms 5%, 1/4W	
R20	0683-1035	R: fxd, comp, 10K ohms 5%, 1/4W	
R21	0683-4735	R: fxd, comp, 47K ohms 5%, 1/4W	
R22	0683-3925	R: fxd, comp, 3900 ohms 5%, 1/4W	
R23	0683-1815	R: fxd, comp, 180 ohms 5%, 1/4W	
R24	0683-1045	R: fxd, comp, 100K ohms 5%, 1/4W	
R25	0683-3925	R: fxd, comp, 3900 ohms 5%, 1/4W	
R26	0686-7525	R: fxd, comp, 7500 ohms 5%, 1/2W	
R27	0683-4335	R: fxd, comp, 43K ohms 5%, 1/4W	
R28	0683-1035	R: fxd, comp, 10K ohms 5%, 1/4W	
R29	0683-1035	R: fxd, comp, 10K ohms 5%, 1/4W	
R30	0686-7525	R: fxd, comp, 7500 ohms 5%, 1/2W	
R31	0683-4335	R: fxd, comp, 43K ohms 5%, 1/4W	
R32	0683-4735	R: fxd, comp, 47K ohms 5%, 1/4W	
R33	0683-3925	R: fxd, comp, 3900 ohms 5%, 1/4W	

= See list of abbreviations in introduction to this section

Table IIA-1. Reference Designation Index (Cont'd)

Reference Designation	hp Stock No.	Description #	Note
R34	0683-1815	R: fxd, comp, 180 ohms 5%, 1/4W	
R35	0683-1045	R: fxd, comp, 100K ohms 5%, 1/4W	
R36	0683-3925	R: fxd, comp, 3900 ohms 5%, 1/4W	
R37	0686-7525	R: fxd, comp, 7500 ohms 5%, 1/2W	
R38	0683-4335	R: fxd, comp, 43K ohms 5%, 1/4W	
R39	0683-1035	R: fxd, comp, 10K ohms 5%, 1/4W	
R40	0683-1035	R: fxd, comp, 10K ohms 5%, 1/4W	
R41	0686-7525	R: fxd, comp, 7500 ohms 5%, 1/2W	
R42	0683-4335	R: fxd, comp, 43K ohms 5%, 1/4W	
R43	0683-4735	R: fxd, comp, 47K ohms 5%, 1/4W	
R44	0683-3925	R: fxd, comp, 3900 ohms 5%, 1/4W	
R45	0683-1815	R: fxd, comp, 180 ohms 5%, 1/4W	
R46	0683-1045	R: fxd, comp, 100K ohms 5%, 1/4W	
R47	0683-3925	R: fxd, comp, 3900 ohms 5%, 1/4W	
R48	0686-7525	R: fxd, comp, 7500 ohms 5%, 1/4W	
R49	0683-4335	R: fxd, comp, 43K ohms 5%, 1/4W	
R50	0683-1035	R: fxd, comp, 10K ohms 5%, 1/4W	
R51	0683-1035	R: fxd, comp, 10K ohms 5%, 1/4W	
R52	0686-7525	R: fxd, comp, 7500 ohms 5%, 1/2W	
R53	0683-4335	R: fxd, comp, 43K ohms 5%, 1/4W	
R54	0683-4735	R: fxd, comp, 47K ohms 5%, 1/4W	
R55	0683-3925	R: fxd, comp, 3900 ohms 5%, 1/4W	
R56	0683-1815	R: fxd, comp, 180 ohms 5%, 1/4W	
R57	0683-1045	R: fxd, comp, 100K ohms 5%, 1/4W	
R58	0683-3925	R: fxd, comp, 3900 ohms 5%, 1/4W	
R59	0686-7525	R: fxd, comp, 7500 ohms 5%, 1/2W	
R60	0683-4335	R: fxd, comp, 43K ohms 5%, 1/4W	
R61	0683-1035	R: fxd, comp, 10K ohms 5%, 1/4W	
R62	0683-7525	R: fxd, comp, 7500 ohms 5%, 1/4W	
R63	0683-4725	R: fxd, comp, 4700 ohms 5%, 1/4W	
R64	0683-4335	R: fxd, comp, 43K ohms 5%, 1/4W	
V1		NSR Part of Readout Block Assembly	

See list of abbreviations in introduction to this section

Table IIA-2. Reference Designation Index, Option 02 and 03 (Model 5512A)

Reference Designation	ⓗⓟ Stock No.	Description #	Note
	05512-6001	300 KC Decimal Counter Assembly with 1248 1 State Positive BCD Output	
	05512-6002	300 KC Decimal Counter Assembly with 1248 1 State Negative BCD Output	
		Readout Block Assembly, Order by Description	
C1	0140-0194	C: fxd, mica, 110 pf 5%, 300 vdcw	
C2	0140-0217	C: fxd, mica, 140 pf 2%, 300 vdcw	
C3	0140-0194	C: fxd, mica, 110 pf 5%, 300 vdcw	
C4	0140-0197	C: fxd, mica, 180 pf 5%, 300 vdcw	
C5	0140-0194	C: fxd, mica, 110 pf 5%, 300 vdcw	
C6	0140-0194	C: fxd, mica, 110 pf 5%, 300 vdcw	
C7	0140-0195	C: fxd, mica, 130 pf 5%, 300 vdcw	
C8	0140-0194	C: fxd, mica, 110 pf 5%, 300 vdcw	
C9	0140-0194	C: fxd, mica, 110 pf 5%, 300 vdcw	
C10	0140-0196	C: fxd, mica, 150 pf 5%, 300 vdcw	
C11	0140-0198	C: fxd, mica, 200 pf 5%, 300 vdcw	
C12	0140-0198	C: fxd, mica, 200 pf 5%, 300 vdcw	
C13	0150-0121	C: fxd, cer, 0.1 μf +80% -20%, 50 vdcw	
CR1 thru CR8	1901-0025	Semicon Device: Diode, Silicon	
CR9	1910-0015	Semicon Device: Diode, Germanium	
CR10	1910-0016	Semicon Device: Diode, Germanium	
CR11 thru CR14	1910-0015	Semicon Device: Diode, Germanium	
DS1 thru DS5		NSR Part of Readout Block Assembly	
DS6	1970-0002	Electron Tube Indicator: 10 digit	
L1	9140-0161	Coil: fxd, 3600 μh 5%	
Q1 thru Q8	1850-0062	Transistor: Germanium, SPL 2N404	
R1	0683-2745	R: fxd, comp, 270K ohms 5%, 1/4W	
R2		NSR Part of Readout Block Assembly	
R3	0683-1055	R: fxd, comp, 1 megohm 5%, 1/4W	
R4	0683-8235	R: fxd, comp, 82K ohms 5%, 1/4W	
R5		Not assigned	
R6 thru R9	0683-3945	R: fxd, comp, 390K ohms 5%, 1/4W	
R10 thru R17	0683-5635	R: fxd, comp, 56K ohms 5%, 1/4W	
R18	0686-7525	R: fxd, comp, 7500 ohms 5%, 1/2W	
R19	0683-4335	R: fxd, comp, 43K ohms 5%, 1/4W	
R20	0683-1035	R: fxd, comp, 10K ohms 5%, 1/4W	
R21	0683-4735	R: fxd, comp, 47K ohms 5%, 1/4W	
R22	0683-3925	R: fxd, comp, 3900 ohms 5%, 1/4W	
R23	0683-1815	R: fxd, comp, 180 ohms 5%, 1/4W	
R24	0683-1045	R: fxd, comp, 100K ohms 5%, 1/4W	
R25	0683-3925	R: fxd, comp, 3900 ohms 5%, 1/4W	
R26	0686-7525	R: fxd, comp, 7500 ohms 5%, 1/2W	
R27	0683-4335	R: fxd, comp, 43K ohms 5%, 1/4W	
R28	0683-1035	R: fxd, comp, 10K ohms 5%, 1/4W	
R29	0683-1035	R: fxd, comp, 10K ohms 5%, 1/4W	
R30	0686-7525	R: fxd, comp, 7500 ohms 5%, 1/2W	
R31	0683-4335	R: fxd, comp, 43K ohms 5%, 1/4W	
R32	0683-4735	R: fxd, comp, 47K ohms 5%, 1/4W	

See list of abbreviations in introduction to this section

Table IIA-2. Reference Designation Index (Cont'd)

Reference Designation	Stock No.	Description #	Note
R33	0683-3925	R: fxd, comp, 3900 ohms 5%, 1/4W	
R34	0683-1815	R: fxd, comp, 180 ohms 5%, 1/4W	
R35	0683-1045	R: fxd, comp, 100K ohms 5%, 1/4W	
R36	0683-3925	R: fxd, comp, 3900 ohms 5%, 1/4W	
R37	0686-7525	R: fxd, comp, 7500 ohms 5%, 1/2W	
R38	0683-4335	R: fxd, comp, 43K ohms 5%, 1/4W	
R39	0683-1035	R: fxd, comp, 10K ohms 5%, 1/4W	
R40	0683-1035	R: fxd, comp, 10K ohms 5%, 1/4W	
R41	0686-7525	R: fxd, comp, 7500 ohms 5%, 1/2W	
R42	0683-4335	R: fxd, comp, 43K ohms 5%, 1/4W	
R43	0683-4735	R: fxd, comp, 47K ohms 5%, 1/4W	
R44	0683-3925	R: fxd, comp, 3900 ohms 5%, 1/4W	
R45	0683-1815	R: fxd, comp, 180 ohms 5%, 1/4W	
R46	0683-1045	R: fxd, comp, 100K ohms 5%, 1/4W	
R47	0683-3925	R: fxd, comp, 3900 ohms 5%, 1/4W	
R48	0686-7525	R: fxd, comp, 7500 ohms 5%, 1/2W	
R49	0683-4335	R: fxd, comp, 43K ohms 5%, 1/4W	
R50	0683-1035	R: fxd, comp, 10K ohms 5%, 1/4W	
R51	0683-1035	R: fxd, comp, 10K ohms 5%, 1/4W	
R52	0686-7525	R: fxd, comp, 7500 ohms 5%, 1/2W	
R53	0683-4335	R: fxd, comp, 43K ohms 5%, 1/4W	
R54	0683-4735	R: fxd, comp, 47K ohms 5%, 1/4W	
R55	0683-3925	R: fxd, comp, 3900 ohms 5%, 1/4W	
R56	0683-1815	R: fxd, comp, 180 ohms 5%, 1/4W	
R57	0683-1045	R: fxd, comp, 100K ohms 5%, 1/4W	
R58	0683-3925	R: fxd, comp, 3900 ohms 5%, 1/4W	
R59	0686-7525	R: fxd, comp, 7500 ohms 5%, 1/2W	
R60	0683-4335	R: fxd, comp, 43K ohms 5%, 1/4W	
R61	0683-1035	R: fxd, comp, 10K ohms 5%, 1/4W	
R62	0683-7525	R: fxd, comp, 7500 ohms 5%, 1/4W	
R63	0683-4725	R: fxd, comp, 4700 ohms 5%, 1/4W	
R64	0683-4335	R: fxd, comp, 43K ohms 5%, 1/4W	
V1		NSR Part of Readout Block Assembly	

See list of abbreviations in introduction to this section

HEWLETT hp PACKARD

MANUAL CHANGES

MODEL 5212A - 5512A
ELECTRONIC COUNTER

Manual Serial Prefix: 648-
Manual Printed: JUNE 1967

MAKE ALL CORRECTIONS IN THIS MANUAL ACCORDING TO ERRATA BELOW, THEN CHECK THE FOLLOWING TABLE FOR YOUR INSTRUMENT SERIAL PREFIX (3 DIGITS) OR SERIAL NUMBER (8 DIGITS) AND MAKE ANY LISTED CHANGE(S) IN THE MANUAL.

► NEW ITEM.

SERIAL PREFIX OR NUMBER	MAKE MANUAL CHANGES	SERIAL PREFIX OR NUMBER	MAKE MANUAL CHANGES
976- (5512A)	1		

ERRATA

Page 1-2, Table 1-2, BCD OUTPUT, Reference Levels:
Change -2.4v to -14v.
Change -26.9v to -24.5v.

Page 5-3, Table 5-3:
Change voltages at A17 (12) to -24.5±1.
Change voltages at A17 (13) to -14±1.

Page 5-8, Table 5-6, 7. BCD OUTPUT:
Change 1st line from -2.4v to -14v.
Change second line from -26.9v to -24.5v.
At 7.b. Change (-2.4v) to (-14v) and (-26.9v) to (-24.5v).

Page 5-8a, PERFORMANCE TEST CHECK CARD, 7. BCD OUTPUT:
Change -2.4v to -14v.
Change -26.9v to -24.5v.
In adjoining column to right - make same change.

Page 5-11, Figure 5-3:
Change A17 (12) from -26.5v to -24.5v.
Change A17 (13) from -2.5v to -14V.

► Page 5-13, Figure 5-4 (A1, A2):
Change A1CR1 to 8.8v.

Page 5-21, Figure 5-8 (A16):
Change CR7 to 15.4V.

Page 5-27, Figure 5-11:
Change A17R9 to 2000.
Change A17R10 to 1500.
Change A17R11 to 1500.
Change voltages same as at Page 5-3, Table 5-3 above.
Change CR9 to 7.15V.

Page 6-2, Table 6-1:
Change C9 from 0140-0152 to 0140-0179.

► Page 6-4, Table 6-2, (A1):
Change CR1 description to "DIODE: BRKDN 8.8v".

Oct 14, 1970

Supplement A for
05212-9009

ERRATA (Cont'd)

Page 6-8, Table 6-5, (A8):
Change Q1 to "1854-0003 TRANSISTOR:SI.

Page 6-9, Table 6-6 (A9-A14):
Change CR1 thru CR5 from 1910-0015 to 1910-0016.

Page 6-11, Table 6-7, (A15):
Change CR6, CR7 from 1901-0100 to 1901-0025.
Add to Q1, Q2 descritpion "2N404".

Page 6-13, Table 6-8 (A16):
Change CR7 description to "DIODE: BRKDN 15.4V".
Add to Q2, Q4, Q5 description "2N404".

Page 6-14, Table 6-9 (A17):
Change CR9 to "1902-0074 DIODE: BRKDN 7.15V".
Add to Q1 description "2N404".
Delete R9 0683-1225 R: FXD COMP 1.2K OHM 5% 1/4W.
R10 0686-3625 R: FXD COMP 3.6K OHM 5% 1/2W.
R11 0683-3615 R: FXD COMP 360 OHM 5% 1/4W.
Add R9 0683-2025 R: FXD COMP 2000 OHM 5% 1/4W.
R10 0686-1525 R: FXD COMP 1500 OHM 5% 1/2W.
R11 0683-1525 R: FXD COMP 1500 OHM 5% 1/4W.
These are preferred parts.

CHANGE 1 (976-)

This change adapts the Electronic Counter to the IEC (International Electrotechnical Commission) recommendations for primary power circuits. This change affects the detachable power cord, 115-230 volt switch, power receptacle, line switch, and the front and rear panels.

Page 1-0, Figure 1-1:
On front panel, indicate that the power switch engraving is "LINE ON".

Page 5-27/5-28, Figure 5-11:
In the primary power circuit, change the black wire that connects to J3 and F1 to "White-Black-Gray"; change the gray wire that connects to F1 and S7 to "White-Brown-Gray".

Page 6-2, Table 6-1:
Change J3 part number to "1251-2357".

Page 6-3, Table 6-1:
Change S7 part number to "3101-0030".
Change S8 part number to "3101-1234".
Change W1 part number to "8120-1348".
Add "05512-0003, Rear Panel".

AFRICA, ASIA, AUSTRALIA

ANGOLA
Telectra
Empresa Técnica de Equipamentos Eléctricos, S.A.R.L.
R. Barbosa Rodrigues, 41-I°DT.°
Caixa Postal, 6487
Luanda
Tel: 35515/6
Cable: TELECTRA Luanda

AUSTRALIA
Hewlett-Packard Australia Pty. Ltd.
31-41 Joseph Street
Blackburn, Victoria 3130
P.O. Box 36
Doncaster East, Victoria 3109
Tel: 896351
Telex: 31-024
Cable: HEWPARD Melbourne

Hewlett-Packard Australia Pty. Ltd.
31 Bridge Street
Pymble
New South Wales, 2073
Tel: 4496566
Telex: 21561
Cable: HEWPARD Sydney

Hewlett-Packard Australia Pty. Ltd.
153 Greenhill Road
Parkside, S.A., 5063
Tel: 2725911
Telex: 82536
Cable: HEWPARD Adelaide

Hewlett-Packard Australia Pty. Ltd.
141 Stirling Highway
Nedlands, W.A. 6009
Tel: 3865455
Telex: 93859
Cable: HEWPARD Perth

Hewlett-Packard Australia Pty. Ltd.
121 Wollongong Street
Fyshwick, A.C.T. 2609
Tel: 804244
Telex: 62650
Cable: HEWPARD Canberra

Hewlett Packard Australia Pty. Ltd.
5th Floor
Teachers Union Building
495-499 Boundary Street
Spring Hill, Queensland 4000
Tel: 2291544
Cable: HEWPARD Brisbane

BANGLADESH
The General Electric Co. of Bangladesh Ltd.
Magnet House 72
Dilkusha Commercial Area
Motijheil, Dacca 2
Tel: 252415, 252419
Telex: 734
Cable: GECDAC Dacca

ETHIOPIA
Abdella Abdulmalik
P.O. Box 2635
Addis Ababa
Tel: 11 93 40

GUAM
Guam Medical Supply, Inc.
Suite C, Airport Plaza
P.O. Box 8947
Tamuning 96911
Tel: 646-4513
Cable: EARMED Guam

HONG KONG
Hewlett-Packard Hong Kong Ltd.
Room 105, Austin Centre
1st Floor
21 Austin Avenue
TST P.O. Box 98524
Kowloon
Tel: 3-697446 (5 lines)
Telex: 36678 HX
Cable: HEWPACK Hong Kong

Medical/Analytical Only
Schmidt & Co. (Hong Kong) Ltd.
Wing On Centre, 28th Floor
Connaught Road, C.
Hong Kong
Tel: 5-455644
Telex: 74766 SCHMX HX

INDIA
Blue Star Ltd.
Sahas
414/2 Vir Savarkar Marg
Prabhadevi
Bombay 400 025
Tel: 45 78 87
Telex: 011-4093
Cable: FROSTBLUE

Blue Star Ltd.
Band Box House
Prabhadevi
Bombay 400 025
Tel: 45 73 01
Telex: 011-3751
Cable: BLUESTAR

Blue Star Ltd.
Bhavdeep
Stadium Road
Ahmedabad 380 014
Tel: 43922
Telex: 012-234
Cable: BLUEFROST

Blue Star Ltd.
7 Hare Street
Calcutta 700 001
Tel: 23-0131
Telex: 021-7655
Cable: BLUESTAR

Blue Star Ltd.
Bhandari House
91 Nehru Place
New Delhi 110 024
Tel: 682547
Telex: 031-2463
Cable: BLUESTAR

Blue Star Ltd.
T.C. 7/603 'Poornima'
Maruthankuzhi
Trivandrum 695 013
Tel: 65799
Telex: 0884-259
Cable: BLUESTAR

Blue Star Ltd.
11 Magarath Road
Bangalore 560 025
Tel: 55668
Telex: 0845-430
Cable: BLUESTAR

Blue Star Ltd.
Meeakshi Mandiram
XXXXV/1379-2 Mahatma Gandhi Rd.
Cochin 682 016
Tel: 32069
Telex: 085-514
Cable: BLUESTAR

Blue Star Ltd.
1-1-117/1 Sarojini Devi Road
Secunderabad 500 033
Tel: 70126
Telex: 0155-459
Cable: BLUESTAR

Blue Star Ltd.
133 Kodambakkam High Road
Madras 600 034
Tel: 82057
Telex: 041-379
Cable: BLUESTAR

INDONESIA
BERCA Indonesia P.T.
P.O. Box 496/Jkt.
Jln. Abdul Muis 62
Jakarta
Tel: 349255, 349886
Telex: 46748 BERSIL IA
Cable: BERSAL

BERCA Indonesia P.T.
P.O. Box 174/Sby.
23 Jln. Jimerto
Surabaya
Tel: 42027
Cable: BERCACON

JAPAN
Yokogawa-Hewlett-Packard Ltd.
29-21, Takaido-Higashi 3-chome
Suginami-ku, **Tokyo** 168
Tel: 03-331-6111
Telex: 232-2024 YHP-Tokyo
Cable: YHPMARKET TOK 23 724

Yokogawa-Hewlett-Packard Ltd.
Chuo Bldg., 4th Floor
4-20, Nishinakajima 5-chome
Yodogawa-ku, Osaka-shi
Osaka, 532
Tel: 06-304-6021
Telex: 523-3624

Yokogawa-Hewlett-Packard Ltd.
Sumitomo Seimei Nagaya Bldg.
11-2 Shimosasajima-cho,
Nakamura-ku, **Nagoya,** 450
Tel: 052 571-5171

Yokogawa-Hewlett-Packard Ltd.
Tanigawa Building
2-24-1 Tsuruya-cho
Kanagawa-ku
Yokohama, 221
Tel: 045-312-1252
Telex: 382-3204 YHP YOK

Yokogawa-Hewlett-Packard Ltd.
Mito Mitsui Building
105, 1-chome, San-no-maru
Mito, Ibaragi 310
Tel: 0292-25-7470

Yokogawa-Hewlett-Packard Ltd.
Inoue Building
1348-3, Asahi-cho, 1-chome
Atsugi, Kanagawa 243
Tel: 0462-24-0452

Yokogawa-Hewlett-Packard Ltd.
Kumagaya Asahi
Hachijuni Building
4th Floor
3-4, Tsukuba
Kumagaya, Saitama 360
Tel: 0485-24-6563

KENYA
ADCOM Ltd., Inc.
P.O. Box 30070
Nairobi
Tel: 331955
Telex: 22639

Medical Only
International Aeradio (E.A.) Ltd.
P.O. Box 19012
Nairobi Airport
Nairobi
Tel: 336055/56
Telex: 22201/22301
Cable: INTAERIO Nairobi

Medical Only
International Aeradio (E.A.) Ltd.
P.O. Box 95221
Mombasa

KOREA
Samsung Electronics Co., Ltd.
22nd Floor Dongbang Bldg.,
250, 2-KA, Taepyung-Ro
Chung-Ku,
Seoul
Tel: 777-4886
Telex: SAMSAN 27364

MALAYSIA
Hewlett-Packard Sales (Malaysia) Sdn. Bhd.
Suite 2.21/2.22
Bangunan Angkasa Raya
Jalan Ampang
Kuala Lumpur
Tel: 483680, 485653

Protel Engineering
P.O. Box 1917
Lot 259, Satok Road
Kuching, **Sarawak**
Tel: 53544
Cable: PROTELENG

MOZAMBIQUE
A.N. Goncalves, Ltd.
162, 1° Apt. 14 Av. D. Luis
Caixa Postal 107
Maputo
Tel: 27091, 27114
Telex: 6-203 NEGON Mo
Cable: NEGON

NEW GUINEA
Hewlett-Packard Australia Pty. Ltd.
Development Bank Building
Ground Floor
Ward Strip
Port Moresby, Papua
Tel: 258933

NEW ZEALAND
Hewlett-Packard (N.Z.) Ltd.
4-12 Cruickshank Street
Kilbirnie, Wellington 3
P.O. Box 9443
Courtney Place
Wellington
Tel: 877-199
Cable: HEWPACK Wellington

Hewlett-Packard (N.Z.) Ltd.
P.O. Box 26-189
169 Manukau Road
Epsom, **Auckland**
Tel: 687-159
Cable: HEWPACK Auckland

Analytical/Medical Only
Northrop Instruments & Systems Ltd.,
Sturdee House
85-87 Ghuznee Street
P.O. Box 2406
Wellington
Tel: 850-091
Telex: NZ 31291

Northrup Instruments & Systems Ltd.
Eden House, 44 Khyber Pass Rd.
P.O. Box 9682, Newmarket
Auckland 1
Tel: 794-091

Northrup Instruments & Systems Ltd.
Terrace House, 4 Oxford Terrace
P.O. Box 8388
Christchurch
Tel: 64-165

NIGERIA
The Electronics Instrumentations Ltd.
N6B/770 Oyo Road
Oluseun House
P.M.B. 5402
Ibadan
Tel: 461577
Telex: 31231 TEIL NG
Cable: THETIEL Ibadan

The Electronics Instrumentations Ltd.
144 Agege Motor Road, Mushin
P.O. Box 481
Mushin, **Lagos**
Cable: THETEIL Lagos

PAKISTAN
Mushko & Company Ltd.
Oosman Chambers
Abdullah Haroon Road
Karachi-3
Tel: 511027, 512927
Telex: 2894
Cable: COOPERATOR Karachi

Mushko & Company, Ltd.
10, Bazar Rd.
Sector G-6/4
Islamabad
Tel: 28264
Cable: FEMUS Rawalpindi

PHILIPPINES
The Online Advanced Systems Corporation
Rico House
Amorsolo cor. Herrera Str.
Legaspi Village, Makati
P.O. Box 1510
Metro **Manila**
Tel: 85-35-81, 35-34-91, 85-32-21
Telex: 3274 ONLINE

RHODESIA
Field Technical Sales
45 Kelvin Road North
P.O. Box 3458
Salisbury
Tel: 705231 (5 lines)
Telex: RH 4122

SINGAPORE
Hewlett-Packard Singapore (Pte.) Ltd.
1150 Depot Road
P.O. Box 58
Alexandra Post Office
Singapore 3
Tel: 270-2355
Telex: HPSG RS 21486
Cable: HEWPACK, Singapore

SOUTH AFRICA
Hewlett-Packard South Africa (Pty.), Ltd.
Private Bag Wendywood,
Sandton, Transvaal, 2144
Hewlett-Packard Centre
Daphne Street, Wendywood,
Sandton, 2144
Tel: 802-5111/25
Telex: 8-4782
Cable: HEWPACK Johannesburg

Hewlett-Packard South Africa (Pty.), Ltd.
P.O. Box 120
Howard Place,
Cape Province, 7450
Pine Park Centre, Forest Drive,
Pinelands,
Cape Province, 7405
Tel: 53-7955 thru 9
Telex: 57-0006

SRI LANKA
Metropolitan Agencies Ltd.
209/9 Union Place
Colombo 2
Tel: 35947
Telex: 1377METROLTD CE
Cable: METROLTD

SUDAN
Radison Trade
P.O. Box 921
Khartoum
Tel: 44048
Telex: 375

TAIWAN
Hewlett-Packard Far East Ltd.
Taiwan Branch
Bank Tower, 5th Floor
205 Tun Hau North Road
Taipei
Tel: (02) 751-0404 (15 lines)
Cable: HEWPACK TAIPEI

Hewlett-Packard Far East Ltd.
Taiwan Branch
68-2, Chung Cheng 3rd. Road
Kaohsiung
Tel: (07) 242318-Kaohsiung

Analytical Only
San Kwang Instruments Co., Ltd.
20 Yung Sui Road
Taipei
Tel: 3615446-9 (4 lines)
Telex: 22894 SANKWANG
Cable: SANKWANG Taipei

TANZANIA
Medical Only
International Aeradio (E.A.), Ltd.
P.O. Box 861
Dar es Salaam
Tel: 21251 Ext. 265
Telex: 41030

THAILAND
UNIMESA Co. Ltd.
Elcom Research Building
2538 Sukumvit Ave.
Bangchak, Bangkok
Tel: 3932387, 3930338
Cable: UNIMESA Bangkok

ZAMBIA
R.J. Tilbury (Zambia) Ltd.
P.O. Box 2792
Lusaka
Tel: 73793
Cable: ARJAYTEE, Lusaka

OTHER AREAS NOT LISTED, CONTACT:
Hewlett-Packard Intercontinental
3495 Deer Creek Road
Palo Alto, California 94304
Tel: (415) 856-1501
TWX: 910-373-1267
Cable: HEWPACK Palo Alto
Telex: 034-8300, 034-8493

SALES OFFICES
(cont.)

CANADA

ALBERTA
Hewlett-Packard (Canada) Ltd.
11620A - 168th Street
Edmonton T5M 3T9
Tel: (403) 452-3670
TWX: 610-831-2431

Hewlett-Packard (Canada) Ltd.
210, 7220 Fisher St. S.E.
Calgary T2H 2H5
Tel: (403) 253-2713
TWX: 610-821-6141

BRITISH COLUMBIA
Hewlett-Packard (Canada) Ltd.
10691 Shellbridge Way
Richmond V6X 2W7
Tel: (604) 270-2277
TWX: 610-925-5059

MANITOBA
Hewlett-Packard (Canada) Ltd.
380-550 Century St.
St. James,
Winnipeg R3H 0Y1
Tel: (204) 786-6701
TWX: 610-671-3531

NOVA SCOTIA
Hewlett-Packard (Canada) Ltd.
P.O. Box 931
800 Windmill Road
Dartmouth B3B 1L1
Tel: (902) 469-7820
TWX: 610-271-4482

ONTARIO
Hewlett-Packard (Canada) Ltd.
1020 Morrison Dr.
Ottawa K2H 8K7
Tel: (613) 820-6483
TWX: 610-563-1636

Hewlett-Packard (Canada) Ltd.
6877 Goreway Drive
Mississauga L4V 1M8
Tel: (416) 678-9430
TWX: 610-492-4246

Hewlett-Packard (Canada) Ltd.
552 Newbold Street
London N6E 2S5
Tel: (519) 686-9181
TWX: 610-352-1201

QUEBEC
Hewlett-Packard (Canada) Ltd.
275 Hymus Blvd.
Pointe Claire H9R 1G7
Tel: (514) 697-4232
TWX: 610-422-3022

FOR CANADIAN AREAS NOT LISTED:
Contact Hewlett-Packard (Canada) Ltd. in Mississauga.

CENTRAL, SOUTH AMERICA

ARGENTINA
Hewlett-Packard Argentina S.A.
Santa Fe 2035, Martinez
6140 **Buenos Aires**
Tel: 792-1239, 798-6086
Telex: 122443 AR CIGY
Cable: HEWPACKARG

Biotron S.A.C.I.y M.
Avda. Paseo Colon 221
9 piso
1399 **Buenos Aires**
Tel: 30-4846/1851/8384
34-9356/0460/4551
Telex: (33) 17595 BIO AR
Cable: BIOTRON Argentina

BRAZIL
Hewlett-Packard do Brasil
I.e.C. Ltda.
Alameda Rio Negro, 750
Alphaville
06400 **Barueri** SP
Tel: 429-3222
Cable: HEWPACK São Paulo

Hewlett-Packard do Brasil
I.e.C. Ltda.
Rua Padre Chagas, 32
90000-**Pôrto Alegre**-RS
Tel: 22-2998, 22-5621
Cable: HEWPACK Pôrto Alegre

Hewlett-Packard do Brasil
I.e.C. Ltda.
Av. Epitacio Pessoa, 4664
22471-**Rio de Janeiro**-RJ
Tel: 286-0237
Telex: 021-21905 HPBR-BR
Cable: HEWPACK Rio de Janeiro

CHILE
Jorge Calcagni y Cia. Ltda.
Arturo Burhle 065
Casilla 16475
Correo 9, **Santiago**
Tel: 220222
Telex: JCALCAGNI

COLOMBIA
Instrumentación
Henrik A. Langebaek & Kier S.A.
Carrera 7 No. 48-75
Apartado Aéreo 6287
Bogotá, 1 D.E.
Tel: 269-8877
Telex: 44400
Cable: AARIS Bogotá

Instrumentación
H.A. Langebaek & Kier S.A.
Carrera 63 No. 49-A-31
Apartado 54098
Medellin
Tel: 304475

COSTA RICA
Cientifica Costarricense S.A.
Avenida 2, Calle 5
San Pedro de Montes de Oca
Apartado 10159
San José
Tel: 24-38-20, 24-08-19
Telex: 2367 GALGUR CR
Cable: GALGUR

ECUADOR
CYEDE Cia. Ltda.
P.O. Box 6423 CCI
Av. Eloy Alfaro 1749
Quito
Tel: 450-975, 243-052
Telex: 2548 CYEDE ED
Cable: CYEDE-Quito

Medical Only
Hospitalar S.A.
Casilla 3590
Robles 625
Quito
Tel: 545-250
Cable: HOSPITALAR-Quito

EL SALVADOR
IPESA
Bulevar de los Heroes 11-48
Edificio Sarah 1148
San Salvador
Tel: 252787

GUATEMALA
IPESA
Avenida Reforma 3-48
Zona 9
Guatemala City
Tel: 316627, 314786, 66471-5, ext. 9
Telex: 4192 Teletro Gu

MEXICO
Hewlett-Packard Mexicana, S.A. de C.V.
Av. Periférico Sur No. 6501
Tepepan, Xochimilco
Mexico 23, D.F.
Tel: 905-676-4600
Telex: 017-74-507

Hewlett-Packard Mexicana, S.A. de C.V.
Ave. Constitución No. 2184
Monterrey, N.L.
Tel: 48-71-32, 48-71-84
Telex: 038-410

PANAMA
Electrónico Balboa, S.A.
Aparatado 4929
Panama 5
Calle Samuel Lewis
Edificio "Alfa," No. 2
Ciudad de Panama
Tel: 64-2700
Telex: 3483103 Curundu, Canal Zone
Cable: ELECTRON Panama

PERU
Compañia Electro Médica S.A.
Los Flamencos 145
San Isidro Casilla 1030
Lima 1
Tel: 41-4325
Telex: Pub. Booth 25424 SISIDRO
Cable: ELMED Lima

SURINAM
Surtel Radio Holland N.V.
Grote Hofstr. 3-5
P.O. Box 155
Paramaribo
Tel: 72118, 77880
Cable: Surtel

TRINIDAD & TOBAGO
CARTEL
Caribbean Telecoms Ltd.
P.O. Box 732
69 Frederick Street
Port-of-Spain
Tel: 62-53068

URUGUAY
Pablo Ferrando S.A.C.el.
Avenida Italia 2877
Casilla de Correo 370
Montevideo
Tel: 40-3102
Telex: 702 Public Booth
Para Pablo Ferrando
Cable: RADIUM Montevideo

VENEZUELA
Hewlett-Packard de Venezuela C.A.
P.O. Box 50933
Caracas 105
Los Ruices Norte
3a Transversal
Edificio Segre
Caracas 107
Tel: 239-4133 (20 lines)
Telex: 25146 HEWPACK
Cable: HEWPACK Caracas

FOR AREAS NOT LISTED, CONTACT:
Hewlett-Packard Intercontinental
3495 Deer Creek Road
Palo Alto, California 94304
Tel: (415) 856-1501
TWX: 910-373-1260
Cable: HEWPACK Palo Alto
Telex: 034-8300, 034-8493

EUROPE, NORTH AFRICA, MIDDLE EAST

AUSTRIA
Hewlett-Packard Ges.m.b.H.
Wehlistrasse 29
P.O. Box 7
A-1205 **Vienna**
Tel: 35-16-21-0
Cable: HEWPACK Vienna
Telex: 13582/135066

Hewlett-Packard Ges.m.b.H.
Wehlistrasse, 29
A-1205 **Wien**
Tel: 35-16-21
Telex: 135066

BAHRAIN
Medical Only
Wael Pharmacy
P.O. Box 648
Bahrain
Tel: 54886, 56123
Telex: 8550 WAEL GJ
Cable: WAELPHARM

Al Hamidiya Trading and Contracting
P.O. Box 20074
Manama
Tel: 259978, 259958
Telex: 8895 KALDIA GJ

BELGIUM
Hewlett-Packard Benelux S.A./N.V.
Avenue du Col-Vert, 1,
(Groenkraaglaan)
B-1170 **Brussels**
Tel: (02) 660 50 50
Cable: PALOBEN Brussels
Telex: 23-494 paloben bru

CYPRUS
Kypronics
19 Gregorios Xenopoulos Street
P.O. Box 1152
Nicosia
Tel: 45628/29
Cable: Kypronics Pandehis
Telex: 3018

CZECHOSLOVAKIA
Hewlett-Packard
Obchodni zastupitelstvi v CSSR
Pisemny styk
Post. schranka 27
CS 118 01 **Praha** 011
CSSR

Vyvojova a Provozni Zakladna
Vyzkumnych Ustavu v Bechovicich
CSSR-25097 **Bechovice u Prahy**
Tel: 89 93 41
Telex: 12133

Institute of Medical Bionics
Vyskumny Ustav Lekarskej Bioniky
Jedlova 6
CS-88346 **Bratislava-Kramare**
Tel: 44-551
Telex: 93229

DENMARK
Hewlett-Packard A/S
Datavej 52
DK-3460 **Birkerod**
Tel: (02) 81 66 40
Cable: HEWPACK AS
Telex: 37409 hpas dk

Hewlett-Packard A/S
Navervej 1
DK-8600 **Silkeborg**
Tel: (06) 82 71 66
Telex: 37409 hpas dk
Cable: HEWPACK AS

EGYPT
I.E.A.
International Engineering Associates
24 Hussein Hegazi Street
Kasr-el-Aini
Cairo
Tel: 23 829
Telex: 93830
Cable: INTENGASSO

SAMITRO
Sami Amin Trading Office
18 Abdel Aziz Gawish
Abdine-Cairo
Tel: 24932
Cable: SAMITRO CAIRO

FINLAND
Hewlett-Packard Oy
Revontulentie, 7
SF-02100 **Espoo** 10
Tel: (90) 455 0211
Cable: HEWPACKOY
Telex: 121563 hewpa sf

FRANCE
Hewlett-Packard France
Zone d'activites de Courtaboeuf
Avenue des Tropiques
Boite Postale 6
91401 **Orsay**-Cédex
Tel: (1) 907 78 25
TWX: 600048F

Hewlett-Packard France
Chemin des Mouilles
B.P. 162
69130 **Ecully**
Tel: (78) 33 81 25
TWX: 310617F

Hewlett-Packard France
20, Chemin de La Cépière
31081 **Toulouse**
Le Mirail-Cédex
Tel: (61) 40 11 12

Hewlett-Packard France
Le Ligoures
Place Romée de Villeneuve
13100 **Aix-en-Provence**
Tel: (42) 59 41 02
TWX: 410770F

Hewlett-Packard France
2, Allee de la Bourgonette
35100 **Rennes**
Tel: (99) 51 42 44
TWX: 740912F

Hewlett-Packard France
18, rue du Canal de la Marne
67300 **Schiltigheim**
Tel: (88) 83 08 10
TWX: 890141F

Hewlett-Packard France
Immeuble péricentre
rue van Gogh
59650 **Villeneuve** D'Ascq
Tel: (20) 91 41 25
TWX: 160124F

Hewlett-Packard France
Bâtiment Ampère
Rue de la Commune de Paris
B.P. 300
93153 **Le Blanc Mesnil**-Cédex
Tel: (01) 931 88 50
Telex: 211032F

Hewlett-Packard France
Av. du Pdt. Kennedy
33700 **Merignac**
Tel: (56) 97 01 81

Hewlett-Packard France
Immeuble Lorraine
Boulevard de France
91035 **Evry**-Cédex
Tel: 077 96 60
Telex: 692315F

Hewlett-Packard France
23 Rue Lothaire
57000 **Metz**
Tel: (87) 65 53 50

GERMAN FEDERAL REPUBLIC
Hewlett-Packard GmbH
Vertriebszentrale Frankfurt
Berner Strasse 117
Postfach 560 140
D-6000 **Frankfurt** 56
Tel: (06011) 50041
Cable: HEWPACKSA Frankfurt
Telex: 04 13249 hpffm d

Hewlett-Packard GmbH
Technisches Büro Böblingen
Herrenberger Strasse 110
D-7030 **Böblingen,**
Württemberg
Tel: (07031) 667-1
Cable: HEWPACK Böblingen
Telex: 07265739 bbn

Hewlett-Packard GmbH
Technisches Büro Düsseldorf
Emanuel-Leutze-Str. 1 (Seestern)
D-4000 **Düsseldorf**
Tel: (0211) 5971-1
Telex: 085/86 533 hpdd d

Hewlett-Packard GmbH
Technisches Büro Hamburg
Kapstadtring 5
D-2000 **Hamburg** 60
Tel: (040) 63804-1
Cable: HEWPACKSA Hamburg
Telex: 21 63 032 hphh d

Hewlett-Packard GmbH
Technisches Büro Hannover
Am Grossmarkt 6
D-3000 **Hannover** 91
Tel: (0511) 46 60 01
Telex: 092 3259

Hewlett-Packard GmbH
Technisches Büro Nürnberg
Neumeyerstrasse 90
D-8500 **Nürnberg**
Tel: (0911) 52 20 83
Telex: 0623 860

EUROPE, NORTH AFRICA, MIDDLE EAST

Hewlett-Packard GmbH
Technisches Büro München
Eschenstrasse 5
D-8021 **Taufkirchen**
Tel: (089) 6117-1
Telex: 0524985

Hewlett-Packard GmbH
Technisches Büro Berlin
Karlsruhestrasse 2-4
D-1000 **Berlin** 30
Tel: (030) 24 90 86
Telex: 018 3405 hpbln d

GREECE

Kostas Karayannis
8 Omirou Street
Athens 133
Tel: 32 30 303/32/37 731
Telex: 21 59 62 RKAR GR
Cable: RAKAR ATHENS

ICELAND

Medical Only
Elding Trading Company Inc.
Hafnarnvoli - Tryggvagötu
P.O. Box 895
IS-**Reykjavik**
Tel: 1 58 20/1 63 03
Cable: ELDING Reykjavik

IRELAND

Hewlett-Packard Ltd.
King Street Lane
Winnersh, Wokingham
Berkshire, RG11 5AR
GB-England
Tel: (0734) 78 47 74
Telex: 847178
Cable: Hewpie London

Hewlett-Packard Ltd.
Kestrel House
Clanwilliam Place
Lower Mount Street
Dublin 2, Eire

Hewlett-Packard Ltd.
2C Avongberg Ind. Est.
Long Mile Road
Dublin 12
Tel: 514322/514224
Telex: 30439

Medical Only
Cardiac Services (Ireland) Ltd.
Kilmore Road
Artane
Dublin 5, Eire
Tel: (01) 315820

Medical Only
Cardiac Services Co.
95A Finaghy Rd. South
Belfast BT10 0BY
GB-Northern Ireland
Tel: (0232) 625566
Telex: 747626

ISRAEL

Electronics Engineering Div.
of Motorola Israel Ltd.
16, Kremenetski Street
P.O. Box 25016
Tel-Aviv
Tel: 38973
Telex: 33569, 34164
Cable: BASTEL Tel-Aviv

ITALY

Hewlett-Packard Italiana S.p.A.
Via G. Di Vittorio, 9
20063 **Cernusco Sul Naviglio** (MI)
Tel: (2) 903691
Telex: 334632 HEWPACKIT

Hewlett-Packard Italiana S.p.A.
Via Turazza, 14
35100 **Padova**
Tel: (49) 664888
Telex: 430315 HEWPACKI

Hewlett-Packard Italiana S.p.A.
Via G. Armellini 10
I-00143 **Roma**
Tel: (06) 54 69 61
Telex: 610514
Cable: HEWPACKIT Roma

Hewlett-Packard Italiana S.p.A.
Corso Giovanni Lanza 94
I-10133 **Torino**
Tel: (011) 659308
Telex: 221079

Hewlett-Packard Italiana S.p.A.
Via Principe Nicola 43 G/C
I-95126 **Catania**
Tel: (095) 37 05 04
Telex: 970291

Hewlett-Packard Italiana S.p.A.
Via Nuova san Rocco A
Capodimonte, 62A
80131 **Napoli**
Tel: (081) 710698

Hewlett-Packard Italiana S.p.A.
Via Martin Luther King, 38/111
I-40132 **Bologna**
Tel: (051) 402394
Telex: 511630

JORDAN

Mouasher Cousins Co.
P.O. Box 1387
Amman
Tel: 24907/39907
Telex: SABCO JO 1456
Cable: MOUASHERCO

KUWAIT

Al-Khaldiya Trading & Contracting
P.O. Box 830-Safat
Kuwait
Tel: 42 4910/41 1726
Telex: 2481 Areeg kt
Cable: VISCOUNT

LUXEMBURG

Hewlett-Packard Beneluz S.A./N.V.
Avenue du Col-Vert, 1
(Groenkraaglaan)
B-1170 **Brussels**
Tel: (02) 660 5050
Cable: PALOBEN Brussels
Telex: 23 494

MOROCCO

Dolbeau
81 rue Karatchi
Casablanca
Tel: 3041 82
Telex: 23051/22822
Cable: MATERIO

Gerep
2, rue d'Agadir
Boite Postal 156
Casablanca
Tel: 272093/5
Telex: 23 739
Cable: GEREP-CASA

NETHERLANDS

Hewlett-Packard Benelux N.V.
Van Heuven Goedhartlaan 121
P.O. Box 667
1181KK **Amstelveen**
Tel: (20) 47 20 21
Cable: PALOBEN Amsterdam
Telex: 13 216

NORWAY

Hewlett-Packard Norge A/S
Ostendalen 18
P.O. Box 34
1345 **Osteraas**
Tel: (02) 1711 80
Telex: 16621 hpnas n

Hewlett-Packard Norge A/S
Nygaardsgaten 114
P.O. Box 4210
5013 Nygaardsgaten,
Bergen
Tel: (05) 21 97 33

POLAND

Biuro Informacji Technicznej
Hewlett-Packard
Ul Stawki 2, 6P
PL00-950 **Warszawa**
Tel: 39 59 62, 39 51 87
Telex: 81 24 53

PORTUGAL

Telectra-Empresa Técnica de
Equipamentos Eléctricos S.a.r.l.
Rua Rodrigo da Fonseca 103
P.O. Box 2531
P-**Lisbon** 1
Tel: (19) 68 60 72
Cable: TELECTRA Lisbon
Telex: 12598

Medical Only
Mundinter
Intercambio Mundial de Comércio
S.a.r.l.
P.O. Box 2761
Avenida Antonio Augusto
de Aguiar 138
P-**Lisbon**
Tel: (19) 53 21 31/7
Telex: 16691 munter p
Cable: INTERCAMBIO Lisbon

QATAR

Nasser Trading & Contracting
P.O. Box 1563
Doha
Tel: 22170
Telex: 4439 NASSER
Cable: NASSER

ROMANIA

Hewlett-Packard Reprezentanta
Bd.n. Balcescu 16
Bucuresti
Tel: 15 80 23/13 88 85
Telex: 10440

SAUDI ARABIA

Modern Electronic
Establishment (Head Office)
P.O. Box 1228, Baghdadiah Street
Jeddah
Tel: 27 798
Telex: 40035
Cable: ELECTA JEDDAH

Modern Electronic Establishment
(Branch)
P.O. Box 2728
Riyadh
Tel: 62596/66232
Telex: 202049

Modern Electronic Establishment
(Branch)
P.O. Box 193
Al-Khobar
Tel: 44678-44813
Telex: 670136
Cable: ELECTA AL-KHOBAR

SPAIN

Hewlett-Packard Española, S.A.
Calle Jerez 3
E-**Madrid** 16
Tel: (1) 458 26 00 (10 lines)
Telex: 23515 hpe

Hewlett-Packard Española S.A.
Colonia Mirasierra
Edificio Juban
c/o Costa Brava, 13
Madrid 34

Hewlett-Packard Española, S.A.
Milanesado 21-23
E-**Barcelona** 17
Tel: (3) 203 6200 (5 lines)
Telex: 52603 hpbe e

Hewlett-Packard Española, S.A.
Av Ramón y Cajal, 1
Edificio Sevilla, planta 9°
E-**Sevilla** 5
Tel: 64 44 54/58

Hewlett-Packard Española S.A.
Edificio Albia II 7° B
E-**Bilbao** 1
Tel: 23 83 06/23 82 06

Hewlett-Packard Española S.A.
C/Ramon Gordillo 1
(Entlo.)
E-**Valencia** 10
Tel: 96-361.13.54/361.13.58

SWEDEN

Hewlett-Packard Sverige AB
Enighetsvägen 3, Fack
S-161 **Bromma** 20
Tel: (08) 730 05 50
Telex: 10721
Cable: MEASUREMENTS
Stockholm

Hewlett-Packard Sverige AB
Frötallsgatan 30
S-421 32 **Västra Frölunda**
Tel: (031) 49 09 50
Telex: 10721 via Bromma office

SWITZERLAND

Hewlett-Packard (Schweiz) AG
Zürcherstrasse 20
P.O. Box 307
CH-8952 **Schlieren-Zürich**
Tel: (01) 7305240
Telex: 53933 hpag ch
Cable: HPAG CH

Hewlett-Packard (Schweiz) AG
Château Bloc 19
CH-1219 **Le Lignon-Geneva**
Tel: (022) 96 03 22
Telex: 27333 hpag ch
Cable: HEWPACKAG Geneva

SYRIA

General Electronic Inc.
Nuri Basha-Ahnaf Ebn Kays Street
P.O. Box 5781
Damascus
Tel: 33 24 87
Telex: 11215 ITIKAL
Cable: ELECTROBOR DAMASCUS

Medical only
Sawah & Co.
Place Azmé
B.P. 2308
Damascus
Tel: 16 367-19 697-14 268
Telex: 11304 SATACO SY
Cable: SAWAH, DAMASCUS

Suleiman Hilal El Mlawi
P.O. Box 2528
Mamoun Bitar Street, 56-58
Damascus
Tel: 11 46 63
Telex: 11270
Cable: HILAL DAMASCUS

TUNISIA

Tunisie Electronique
31 Avenue de la Liberte
Tunis
Tel: 280 144

Corema
1 ter. Av. de Carthage
Tunis
Tel: 253 821
Telex: 12319 CABAM TN

TURKEY

TEKNIM Company Ltd.
Riza Sah Pehlevi
Caddesi No. 7
Kavaklidere, **Ankara**
Tel: 275800
Telex: 42155

Teknim Com., Ltd.
Barbaros Bulvari 55/12
Besikyas, **Istanbul**
Tel: 613 546
Telex: 23540

E.M.A.
Muhendislik Kollektif Sirketi
Mediha Eldem Sokak 41/6
Yüksel Caddesi
Ankara
Tel: 17 56 22
Cable: EMATRADE/Ankara

Yilmaz Ozyurek
Milli Mudafaa Cad 16/6
Kizilay
Ankara
Tel: 25 03 09 - 17 80 26
Telex: 42576 OZEK TR
Cable: OZYUREK ANKARA

UNITED ARAB EMIRATES

Emitac Ltd. (Head Office)
P.O. Box 1641
Sharjah
Tel: 354121/3
Telex: 8136

Emitac Ltd. (Branch Office)
P.O. Box 2711
Abu Dhabi
Tel: 331370/1

UNITED KINGDOM

Hewlett-Packard Ltd.
King Street Lane
Winnersh, Wokingham
Berkshire RG11 5AR
GB-England
Tel: (0734) 784774
Telex: 84 71 78/9

Hewlett-Packard Ltd.
Fourier House,
257-263 High Street
London Colney
St. Albans, Herts
GB-England
Tel: (0727) 24400
Telex: 1-8952716

Hewlett-Packard Ltd.
Trafalgar House
Navigation Road
Altrincham
Cheshire WA14 1NU
GB-England
Tel: (061) 928 6422
Telex: 668068

Hewlett-Packard Ltd.
Lygon Court
Hereward Rise
Dudley Road
Halesowen,
West Midlands, B62 8SD
GB-England
Tel: (021) 501 1221
Telex: 339105

Hewlett-Packard Ltd.
Wedge House
799, London Road
Thornton Heath
Surrey, CR4 6XL
GB-England
Tel: (01) 684-0103/8
Telex: 946825

Hewlett-Packard Ltd.
14 Wesley St
Castleford
Yorks WF10 1AE
Tel: (0977) 550016
TWX: 5557335

Hewlett-Packard Ltd.
Tradax House
St. Mary's Walk
Maidenhead
Berkshire, SL6 1ST
GB-England

Hewlett-Packard Ltd.
Morley Road
Staplehill
Bristol, BS16 4QT
GB-England

Hewlett-Packard Ltd.
South Queensferry
West Lothian, EH30 9TG
GB-Scotland
Tel: (031) 331 1188
Telex: 72682

Hewlett-Packard Ltd.
Kestrel House
Clanwilliam Place
Lower Mount Street
Dublin 2, Eire

Hewlett-Packard Ltd.
2C Avonberg Ind. Est.
Long Mile Road
Dublin 12
Tel: 514322/514224
Telex: 30439

USSR

Hewlett-Packard
Representative Office
USSR
Pokrovsky Boulevard 4/17-kw 12
Moscow 101000
Tel: 294.20.24
Telex: 7825 hewpak su

YUGOSLAVIA

Iskra Commerce, n.sol.o.
Zastopstvo Hewlett-Packard
Obilicev Venac 26
YU 11000 **Beograd**
Tel: 636-955
Telex: 11530

Iskra Commerce, n.sol.o.
Zastopstvo Hewlett-Packard
Miklosiceva 38/VII
YU-61000 **Ljubljana**
Tel: 321-674, 315-879
Telex: 31583

SALES OFFICES
(cont.)

EUROPE, NORTH AFRICA, MIDDLE EAST

SOCIALIST COUNTRIES NOT SHOWN, PLEASE CONTACT:
Hewlett-Packard Ges.m.b.H.
Handelskai 52
P.O. Box 7
A-1205 **Vienna,** Austria
Tel: (0222) 35 16 21 to 27
Cable: HEWPAK Vienna
Telex: 75923 hewpak a

MEDITERRANEAN AND MIDDLE EAST COUNTRIES NOT SHOWN, PLEASE CONTACT:
Hewlett-Packard S.A.
Mediterranean and Middle East Operations
35, Kolokotroni Street
Platia Kefallariou
GR-Kifissia-**Athens,** Greece
Tel: 8080359/429
Telex: 21-6588
Cable: HEWPACKSA Athens

FOR OTHER AREAS NOT LISTED, CONTACT:
Hewlett-Packard S.A.
7, rue du Bois-du-Lan
P.O. Box
CH-1217 Meyrin 2 - **Geneva**
Switzerland
Tel: (022) 82 70 00
Cable: HEWPACKSA Geneva
Telex: 2 24 86

UNITED STATES

ALABAMA
P.O. Box 4207
8290 Whitesburg Dr.
Huntsville 35802
Tel: (205) 881-4592

8933 E. Roebuck Blvd.
Birmingham 35206
Tel: (205) 836-2203/2

ARIZONA
2336 E. Magnolia St.
Phoenix 85034
Tel: (602) 244-1361

2424 East Aragon Rd.
Tucson 85706
Tel: (602) 889-4661

*ARKANSAS
Medical Service Only
P.O. Box 5646
Brady Station
Little Rock 72215
Tel: (501) 376-1844

CALIFORNIA
1579 W. Shaw Ave.
Fresno 93771
Tel: (209) 224-0582

1430 East Orangethorpe Ave.
Fullerton 92631
Tel: (714) 870-1000

3939 Lankershim Boulevard
North Hollywood 91604
Tel: (213) 877-1282
TWX: 910-499-2671

5400 West Rosecrans Blvd.
P.O. Box 92105
World Way Postal Center
Los Angeles 90009
Tel: (213) 776-7500
TWX: 910-325-6608

***Los Angeles**
Tel: (213) 776-7500

3200 Hillview Av
Palo Alto, CA 94304
Tel: (408) 988-7000

3003 Scott Boulevard
Santa Clara 95050
Tel: (408) 988-7000
TWX: 910-338-0518

***Ridgecrest**
Tel: (714) 446-6165

646 W. North Market Blvd.
Sacramento 95834
Tel: (916) 929-7222

9606 Aero Drive
P.O. Box 23333
San Diego 92123
Tel: (714) 279-3200

***Tarzana**
Tel: (213) 705-3344

COLORADO
5600 DTC Parkway
Englewood 80110
Tel: (303) 771-3455

CONNECTICUT
47 Barnes Industrial Road
Barnes Park South
Wallingford 06492
Tel: (203) 265-7801

FLORIDA
P.O. Box 24210
2727 N.W. 62nd Street
Ft. Lauderdale 33309
Tel: (305) 973-2600

4080 Woodcock Drive #132
Brownett Building
Jacksonville 32207
Tel: (904) 398-0663

P.O. Box 13910
6177 Lake Ellenor Dr.
Orlando 32809
Tel: (305) 859-2900

P.O. Box 12826
Suite 5, Bldg. 1
Office Park North
Pensacola 32575
Tel: (904) 476-8422

Computer Systems Only
110 South Hoover Blvd.
Suite 120
Tampa 33609
Tel: (813) 872-0900

GEORGIA
P.O. Box 105005
450 Interstate North Parkway
Atlanta 30348
Tel: (404) 955-1500
TWX: 810-766-4890

Medical Service Only
***Augusta** 30903
Tel: (404) 736-0592

P.O. Box 2103
1172 N. Davis Drive
Warner Robins 31098
Tel: (912) 922-0449

HAWAII
2875 So. King Street
Honolulu 96826
Tel: (808) 955-4455

ILLINOIS
5201 Tollview Dr.
Rolling Meadows 60008
Tel: (312) 255-9800
TWX: 910-687-2260

INDIANA
7301 North Shadeland Ave.
Indianapolis 46250
Tel: (317) 842-1000
TWX: 810-260-1797

IOWA
2415 Heinz Road
Iowa City 52240
Tel: (319) 351-1020

KENTUCKY
10170 Linn Station Road
Suite 525
Louisville 40223
Tel: (502) 426-0100

LOUISIANA
P.O. Box 1449
3229-39 Williams Boulevard
Kenner 70063
Tel: (504) 443-6201

MARYLAND
7121 Standard Drive
Parkway Industrial Center
Hanover 21076
Tel: (301) 796-7700
TWX: 710-862-1943

2 Choke Cherry Road
Rockville 20850
Tel: (301) 948-6370
TWX: 710-828-9684

MASSACHUSETTS
32 Hartwell Ave.
Lexington 02173
Tel: (617) 861-8960
TWX: 710-326-6904

MICHIGAN
23855 Research Drive
Farmington Hills 48024
Tel: (313) 476-6400

724 West Centre Ave.
Kalamazoo 49002
Tel: (616) 323-8362

MINNESOTA
2400 N. Prior Ave.
St. Paul 55113
Tel: (612) 636-0700

MISSISSIPPI
322 N. Mart Plaza
Jackson 39206
Tel: (601) 982-9363

MISSOURI
11131 Colorado Ave.
Kansas City 64137
Tel: (816) 753-8000
TWX: 910-771-2087

1024 Executive Parkway
St. Louis 63141
Tel: (314) 878-0200

NEBRASKA
Medical Only
7101 Mercy Road
Suite 101
Omaha 68106
Tel: (402) 392-0948

NEVADA
***Las Vegas**
Tel: (702) 736-6610

NEW JERSEY
W. 120 Century Rd.
Paramus 07652
Tel: (201) 265-5000
TWX: 710-990-4951

Crystal Brook Professional Building
Route 35
Eatontown 07724
Tel: (201) 542-1384

NEW MEXICO
P.O. Box 11634
Station E
11300 Lomas Blvd., N.E.
Albuquerque 87123
Tel: (505) 292-1330
TWX: 910-989-1185

156 Wyatt Drive
Las Cruces 88001
Tel: (505) 526-2484
TWX: 910-9983-0550

NEW YORK
6 Automation Lane
Computer Park
Albany 12205
Tel: (518) 458-1550
TWX: 710-444-4961

650 Perinton Hill Office Park
Fairport 14450
Tel: (716) 223-9950
TWX: 510-253-0092

No. 1 Pennsylvania Plaza
55th Floor
34th Street & 8th Avenue
New York 10001
Tel: (212) 971-0800

5858 East Molloy Road
Syracuse 13211
Tel: (315) 455-2486

1 Crossways Park West
Woodbury 11797
Tel: (516) 921-0300
TWX: 510-221-2183
Tel: (513) 671-7400

NORTH CAROLINA
5605 Roanne Way
Greensboro 27405
Tel: (919) 852-1800

OHIO
Medical/Computer Only
Bldg. 300
1313 E. Kemper Rd.
Cincinnati 45426
18500 Sprague Road
Cleveland 44130
Tel: (216) 243-7300
TWX: 810-423-9430

330 Progress Rd.
Dayton 45449
Tel: (513) 859-8202

1041 Kingsmill Parkway
Columbus 43229
Tel: (614) 436-1041

OKLAHOMA
P.O. Box 32008
6301 N. Meridan Avenue
Oklahoma City 73112
Tel: (405) 721-0200

9920 E. 42nd Street
Suite 121
Tulsa 74145
Tel: (918) 665-3300

OREGON
17890 S.W. Lower Boones Ferry Road
Tualatin 97062
Tel: (503) 620-3350

PENNSYLVANIA
111 Zeta Drive
Pittsburgh 15238
Tel: (412) 782-0400

1021 8th Avenue
King of Prussia Industrial Park
King of Prussia 19406
Tel: (215) 265-7000
TWX: 510-660-2670

PUERTO RICO
Hewlett-Packard Inter-Americas
Puerto Rico Branch Office
Calle 272,
Edif. 203 Urg. Country Club
Carolina 00924
Tel: (809) 762-7255
Telex: 345 0514

SOUTH CAROLINA
P.O. Box 6442
6941-0 N. Trenholm Road
Columbia 29260
Tel: (803) 782-6493

TENNESSEE
8914 Kingston Pike
Knoxville 37922
Tel: (615) 523-0522

3027 Vanguard Dr.
Director's Plaza
Memphis 38131
Tel: (901) 346-8370

***Nashville**
Medical Service Only
Tel: (615) 244-5448

TEXAS
4171 North Mesa
Suite C110
El Paso 79902
Tel: (915) 533-3555

P.O. Box 1270
201 E. Arapaho Rd.
Richardson 75080
Tel: (214) 231-6101

P.O. Box 42816
10535 Harwin Dr.
Houston 77036
Tel: (713) 776-6400

***Lubbock**
Medical Service Only
Tel: (806) 799-4472

205 Billy Mitchell Road
San Antonio 78226
Tel: (512) 434-8241

UTAH
2160 South 3270 West Street
Salt Lake City 84119
Tel: (801) 972-4711

VIRGINIA
P.O. Box 9669
2914 Hungry Springs Road
Richmond 23228
Tel: (804) 285-3431

Computer Systems/Medical Only
Airport Executive Center
Suite 111
5700 Thurston Avenue
Virginia Beach 23455
Tel: (804) 460-2471

WASHINGTON
Bellefield Office Pk.
1203 - 114th Ave. S.E.
Bellevue 98004
Tel: (206) 454-3971
TWX: 910-443-2446

P.O. Box 4010
Spokane 99202
Tel: (509) 535-0864

*WEST VIRGINIA
Medical/Analytical Only
4604 Mac Corkle Ave., S.E.
Charleston 25304
Tel: (304) 925-0492

WISCONSIN
150 South Sunny Slope Road
Brookfield 53005
Tel: (414) 784-8800

FOR U.S. AREAS NOT LISTED:
Contact the regional office nearest you:
Atlanta, Georgia...North Hollywood, California...Rockville, Maryland...Rolling Meadows, Illinois. Their complete addresses are listed above.

***Service Only**