MODEL 2100/2110 VideoBridge

Auto LRC Meter

Service Manual

Part Number 46507 June 1981

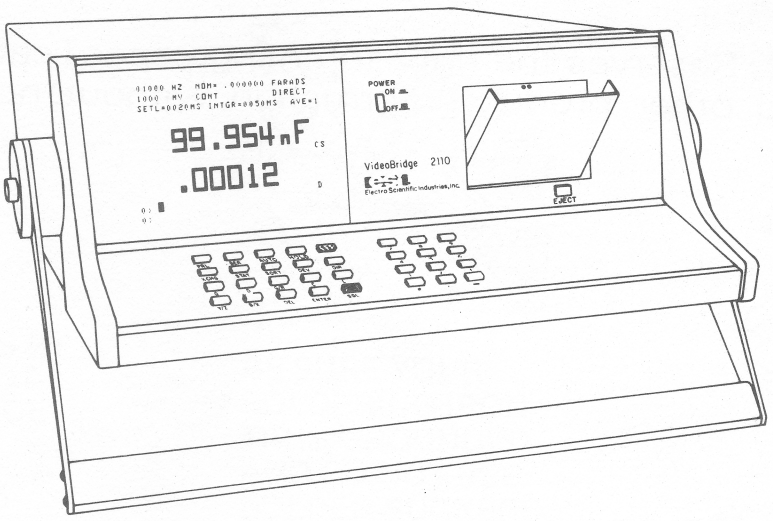

Electro Scientific Industries, Inc.

13900 N.W. Science Park Drive • Portland, Oregon 97229 • Telephone: (503) 641-4141 • Telex: 15-1246

©Copyright 1981 Electro Scientific Industries, Inc.
All rights reserved • Litho in U.S.A.

ESI® Reserves the right to change specifications and other product information without notice.

PROTECT AGAINST ELECTROSTATIC DISCHARGE

In this instrument there are MOS and FET semiconductors, which can be damaged by electrostatic discharge during handling. The following precautionary procedures are recommended to minimize this possibility.

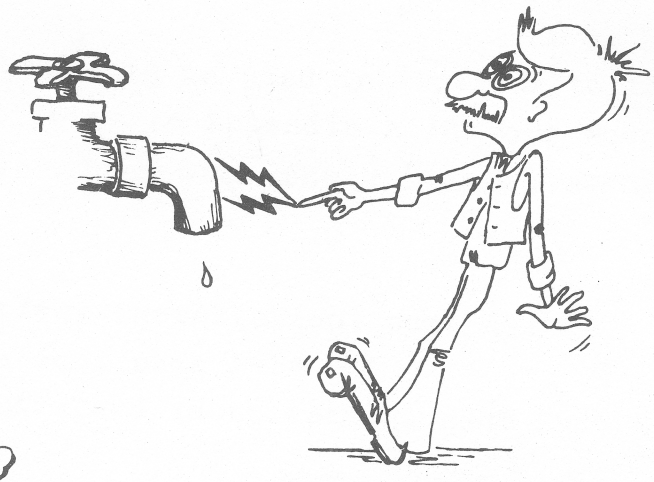

DISCHARGE PERSONAL STATIC BEFORE HANDLING DEVICES



HANDLE STATIC SENSITIVE DEVICES ONLY AT A GROUNDED, STATIC-FREE WORK STATION

HANDLE DEVICES BY THE BODY. DO NOT TOUCH THE DEVICE LEADS.



BE SURE YOUR SOLDERING IRON TIP IS GROUNDED AND DO NOT USE SOLDER-SUCKERS THAT ARE NOT ANTI—STATIC PROTECTED



AVOID HANDLING WHENEVER POSSIBLE

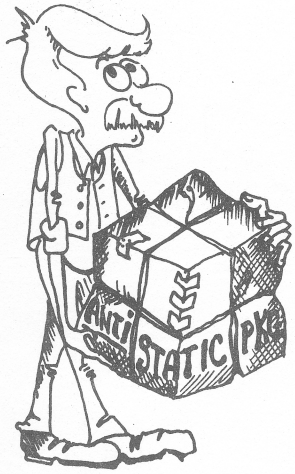

USE ANTI-STATIC PACKAGING FOR HANDLING AND TRANSPORT

KEEP PARTS IN MANUFACTURER'S PROTECTED CONTAINERS

DO NOT SLIDE STATIC SENSITIVE DEVICES OVER ANY SURFACE AND AVOID PLASTIC, VINYL AND STYROFOAM IN WORK AREAS

esi® form no. 702 9-80

esi
Electro Scientific Industries, Inc.

ADDENDUM TO MODEL 2100/2110 MANUAL

Please note, the following procedure should be used in addition to the installation information already existing in Appendix A in your Model 2100/2110 manual. Perform this procedure with the following manual sections:

Section A.1.2 Handler Interface Installation, page A-2
Section A.2.9 GPIB Installation, page A-14
Section A.3.8 RS-232C Circuit Card Installation, page A-36

Instrument Preparation for Circuit Card Installation

Step 1. Instrument Preparation. Turn instrument power OFF and remove all external connections.

Step 2. Outer Cover. Remove the five rear panel 8 x 32 screws holding the outer cover and slide cover off.

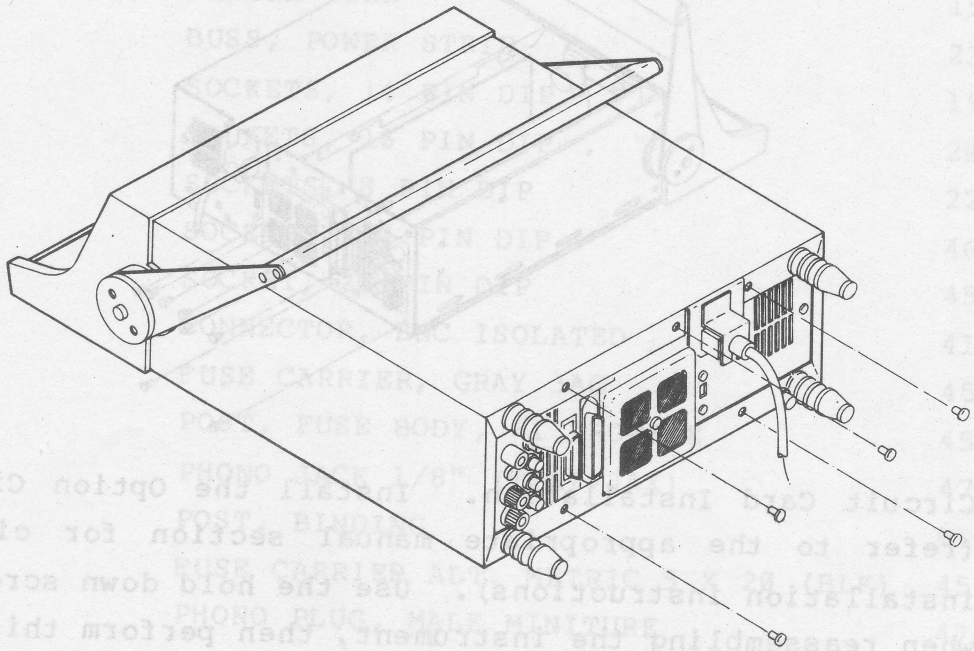

Model 2110 Rear View

Step 3. Circuit Card Hold-Downs. Remove the screws securing the two plastic circuit card hold-downs and remove.

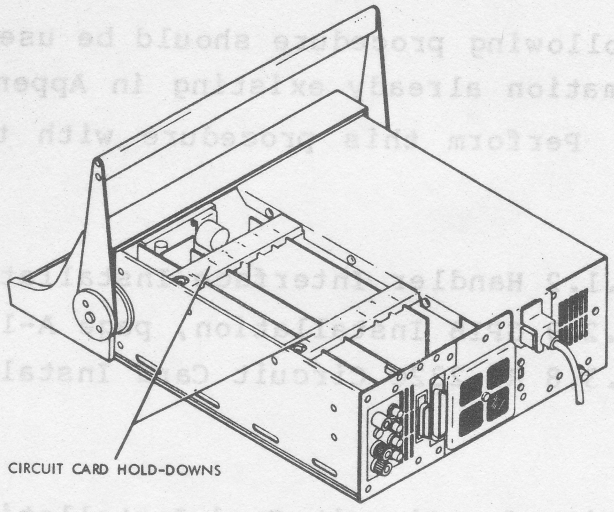

Step 4. Rear Panel (left side). Remove the screws holding the rear panel (left side). The rear panel may have six to eight screws depending on the model and options installed.

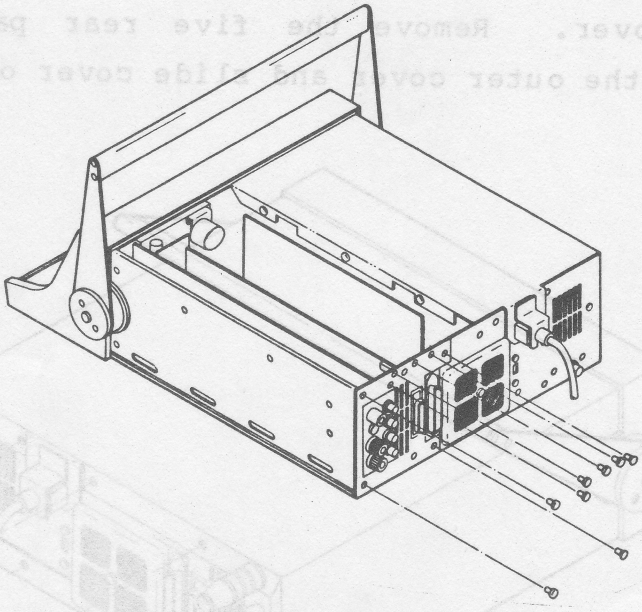

Step 5. Circuit Card Installation. Install the Option Circuit Card (refer to the appropriate manual section for circuit card installation instructions). Use the hold down screw provided when reassembling the instrument, then perform this procedure in its reverse order.

NEW INFORMATION:

ANALOG CIRCUIT ASSEMBLY PARTS LIST AND DIAGRAM

The following parts list and diagram are for revision K of the Analog circuit card (P/N 95239). For circuit cards with revision letters earlier then K, use the parts list and diagram found in Section 5 of the Model 2100/2110 Service Manual.

ANALOG CIRCUIT ASSEMBLY P/N 95239

CIRCUIT NO.	DESCRIPTION	ESI PART NO.
	PANEL, CONNECTOR	45162
	SLEEVING	05889
	SWING LUG, BINDING POST	03247
	COAX	45643
	BRACKET, CONNECTOR PANEL	45161
	HEATSINK	47438
	SHRINK TUBE	15926
	BUSS, POWER STRIP	23997
	SOCKETS, 14 PIN DIP	19189
	SOCKETS, 16 PIN DIP	20860
	SOCKETS, 8 PIN DIP	22410
	SOCKETS, 10 PIN DIP	46481
	SOCKET, 20 PIN DIP	45660
	CONNECTOR, BNC ISOLATED	41820
	FUSE CARRIER, GRAY 3AG	45966
	POST, FUSE BODY, HI PROFILE	45968
	PHONO JACK 1/8" (TINI-JAX)	47082
	POST, BINDING	01435
	FUSE CARRIER ALT. METRIC 5 X 20 (BLK)	45965
	PHONO PLUG, MALE MINITURE	47083

CIRCUIT NO.	DESCRIPTION	ESI PART NO.
	INSULATOR, TRANSFORMER MTG	47275
	PC BOARD, ANALOG	45238
C1,C3,C5,C6,C12, C13,C15,C16,C21,C22, C24-C27,C30-C35,C37, C38,C40,C41,C43,C49, C56	CAPACITOR, 0.01 MICROFARAD, 50V	78032
C2	CAPACITOR, 10 PICOFARADS, POLY	43130
C4,C14,C23,C29,C50, C51	CAPACITOR, 0.47 MICROFARAD, 100V	45645
C7,C8,C19,C36	CAPACITOR, 100 PICOFARADS, POLY	18760
C9,C10	CAPACITOR, 220 PICOFARADS, POLY	29297
C11	CAPACITOR, 470 PICOFARADS, POLY	44711
C17	CAPACITOR, 1500 PICOFARADS, POLY	26203
C18	CAPACITOR, 390 PICOFARADS, POLY	29299
C20	CAPACITOR, 20 PICOFARADS, POLY	20926
C28	CAPACITOR, 0.1 MICROFARD, 50V CERAMIC	45247
C39,C59	CAPACITOR, 0.001 MICROFARAD DISC	21215
C42	CAPACITOR, 0.022 MICROFARAD, CERAMIC	44626
C45	CAPACITOR, 25 MICROFARAD, 25V, ELECTROLYTIC	01941
C46,C47	CAPACITOR, 6.8 MICROFARAD TANT 35V	43792
C48,C44	CAPACITOR, 8 PICOFARADS, DISC	02127
C52,C53	CAPACITOR, 0.0047 MICROFARAD, 100VDC	13299
C54,C55	CAPACITOR, 0.047 MICROFARAD, 100VDC/ 63VAC	46200
C57	CAPACITOR, 150 PICOFARADS, POLY	29606
C58	CAPACITOR, 500 PICOFARADS, CERAMIC, 1000V	01920
CR1-CR3,CR5-CR11	DIODE, 1N4005	13654
CR12-CR17,CR24, CR25,CR30,CR31	DIODE, 1N914A	12356
CR18-CR21	DIODE, HP5082-2800	44832
CR22	VARISTOR, 68V	40993
CR23,CR28	VARISTOR, 1.5 KE1O	42632
CR26,CR27	DIODE, 1N5355, 8.2V	29033
F2	FUSE, 0.5A, 250V, 3AG	01802

CIRCUIT NO.	DESCRIPTION	ESI PART NO.
K1	RELAY, GB 821A	24804
K2	RELAY, GB 822	26667
K3	RELAY, 1805 B-300 ELECTRODYNE	46286
K4,K5	RELAY, 10-55-300	45659
R1	RESISTOR, 3.9 KILOHM, 1W, 10%	46478
R2	RESISTOR, 6.8 KILOHM, 1/2W, 10%	02075
R3	RESISTOR, 330, OHM, 1W, 10%	12174
R4	RESISTOR, 150 OHM, 1W, 10%	12171
R5,R6,R48,R52,R53, R58,R59	RESISTOR, 1 KILOHM, 1/4W, 10%	13920
R7	RESISTOR, 100 OHM, 1/4W, 10%	13907
R8	RESISTOR, 8 OHM, ESI QB +0.080%, +0.075%	46552
R9	RESISTOR, 64 OHM, ESI QB 0.005%	46555
R10	RESISTOR, 512 OHM, ESI QB 0.005%	46554
R11	RESISTOR, 4.096 KILOHM, ESI QB	46553
R12,R13,R18,R25, R33,R34,R35	RESISTOR, 10 KILOHM, 1/4W, 10%	13933
R14,R16,R24,R36	RESISTOR, 2 MEGOHM, 1%	21772
R15	RESISTOR, TRIMMER, 500 KILOHM (SIP)	46389
R17	RESISTOR, 15 MEGOHM, 10%	13976
R19-R23,R40	RESISTOR, TRIMMER 2 KILOHM	46388
R26	RESISTOR, 11 KILOHM, 1%	13359
R27	RESISTOR, 402 OHM, 1/4W, 1%	21726
R28	RESISTOR, 1 KILOHM, 1%	21730
R29	RESISTOR, 6.98 KILOHM, 1%	22857
R30,R42,R43	RESISTOR, 10 KILOHM, 1%	21740
R31	RESISTOR, 9.73 KILOHM, 1%, 1/4W	21762
R32,R50,R51	RESISTOR, 2.2 KILOHM, 10%	13924
R37	RESISTOR, 1 KILOHM, ESI QB	42631
R38	RESISTOR, 7 KILOHM, ESI QB	22777
R41	RESISTOR, 1 MEGOHM, 10%	13960
R44,R39	RESISTOR, 4.99 KILOHM, 1/4W, 1%	21737
R45,R46	RESISTOR, TRIMMER, 10 KILOHM, SIP	46204
R47	RESISTOR, 150 OHM, 1/4W, 10%	13909

CIRCUIT NO.	DESCRIPTION	ESI PART NO.
R49	RESISTOR, 22 KILOHM, 1/4W, 10%	13937
R54,R55	RESISTOR, TRIMMER 10 KILOHM, 20T	41902
R56,R57	RESISTOR, 10 OHM, 10%, 1/4W	13895
T1	TRANSFORMER	46480
TP1-TP8	HEADER, WIRE WRAP 1 X 36	24012
U1	IC, NE5534	46406
U2,U3,U6,U8	IC, LF356N	41473
U4,U10,U20	IC, 4052AE	20743
U5	IC, CD4051	40841
U7	IC, LM311	29544
U9	IC, 4053AE	20744
U11,U13	IC, TL074	43299
U12	IC, 74LS288, PROGRAMMED	46872
U14,U17,U22	IC, AD7524JN DAC	45652
U15	IC, DIP RESISTORS R698-3-R10K	43077
U16	IC, SIP RESISTORS	47328
U18,U21	IC, 7475N	20614
U19	IC, UA759UIC	46479
U23	IC, 7406	20678
U24	IC, 74LS373	46201

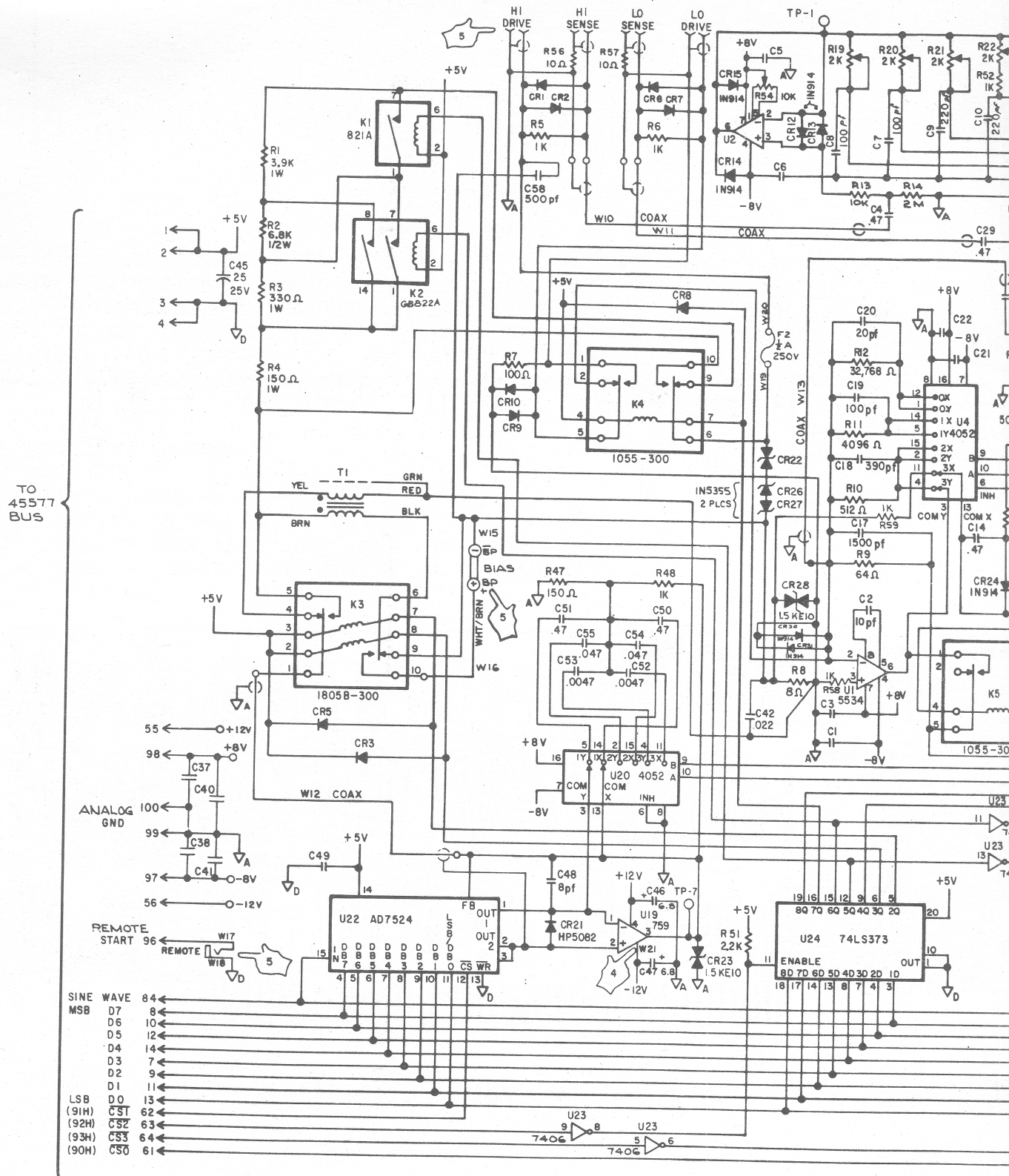

NOTES:

1. ALL RESISTOR VALUES ARE IN OHMS, 1/4 W, 10% UN
2. ALL CAPACITORS ARE IN μF , UNLISTED VALUES ARE
3. ALL DIODES ARE IN4005 UNLESS OTHERWISE STATED

4 HEATSINK TAB OF DEVICE.

5 COMPONENTS NOTED ARE MOUNTED ON THE REAR PAN

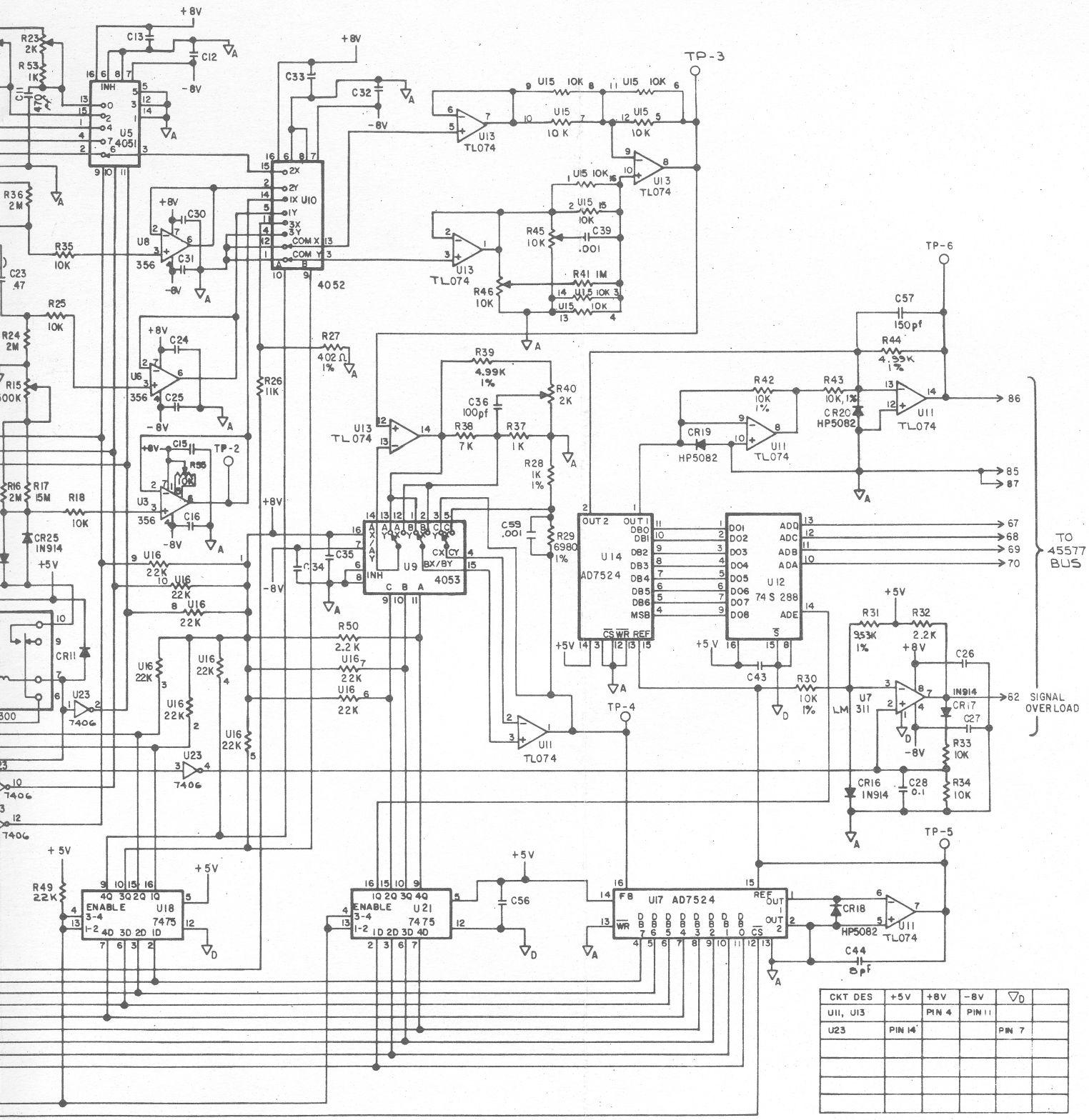

CKT DES	+5V	+8V	-8V	▽D	
U11, U13		PIN 4	PIN 11		
U23	PIN 14			PIN 7	

Figure 1. Analog Circuit Assembly (P/N 95239)

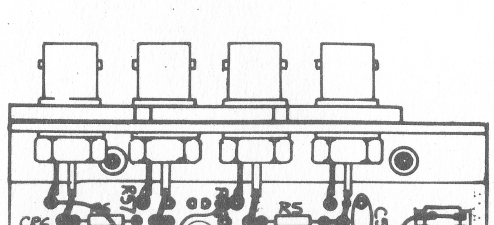

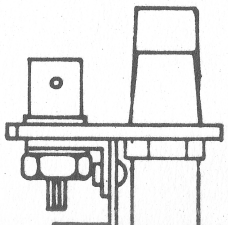

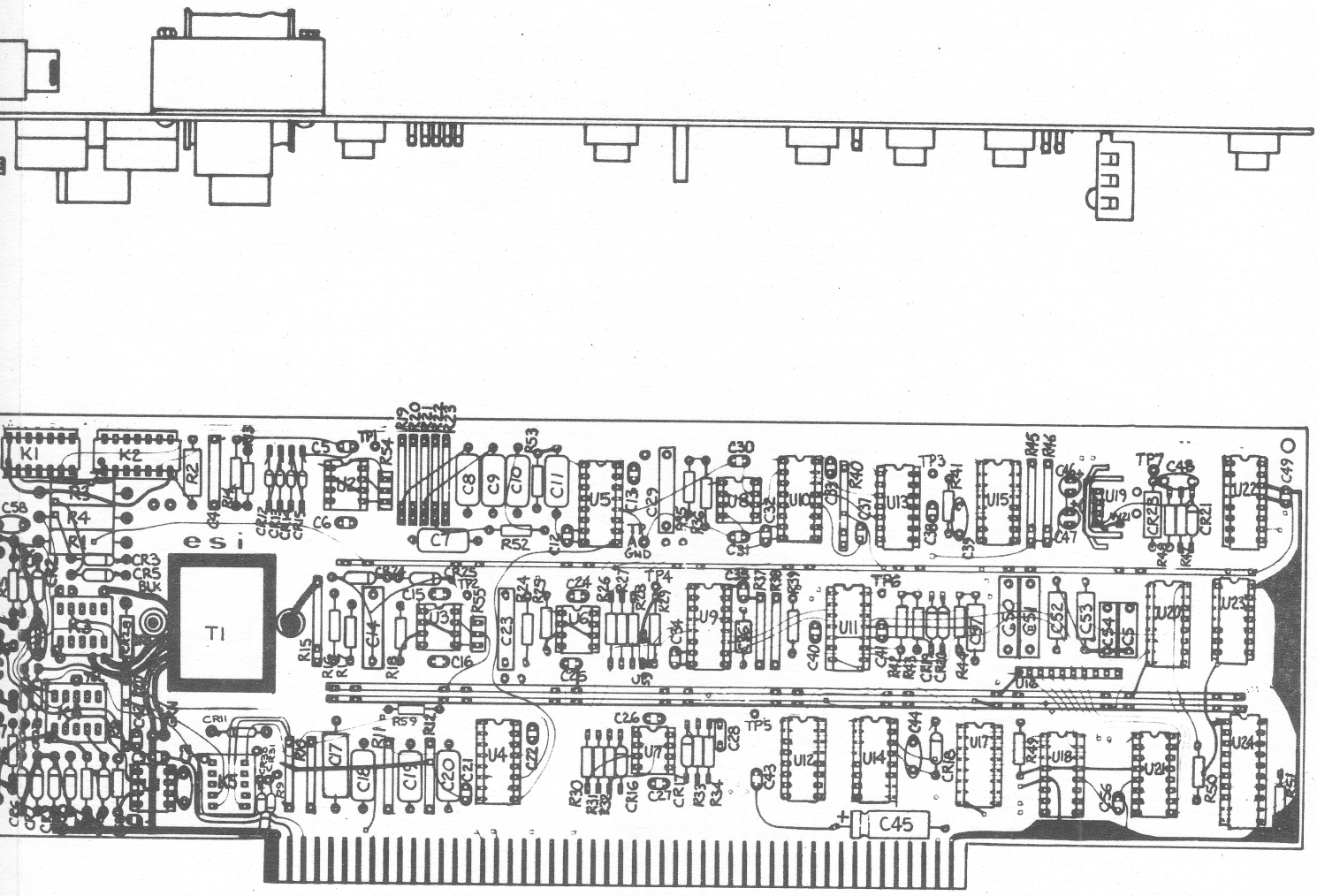

Figure 1. Analog Circuit Assembly (P/N 95239) continued

TABLE OF CONTENTS

WARNING

ELECTRICAL SHOCK HAZARD EXISTS WHEN BIAS SUPPLIES ARE CONNECTED TO THIS INSTRUMENT. WHEN EXTERNAL BIAS SUPPLIES ARE ATTACHED. THE BIAS VOLTAGES ARE PRESENT ON THE REAR PANEL BNC CONNECTORS. USE ONLY BIAS VOLTAGES UP TO +5ØVDC WITH EACH BIAS SUPPLY CURRENT LIMITED AT 1ØØMA. DO NOT TOUCH, CONNECT, OR DISCONNECT THE UNKNOWN OR BNC CABLES WHILE BIAS VOLTAGES ARE APPLIED.

S SAFETY INFORMATION

S.1 INTRODUCTION S-1
S.2 SAFETY TERMS AND MEANINGS S-1
S.3 SAFETY WARNINGS APPEARING IN MANUAL S-1
S.4 WARNING LABELS APPEARING ON INSTRUMENT S-4

1 DESCRIPTION

1.1 INTRODUCTIONS 1-1
1.2 SPECIFICATIONS 1-7
1.2.1 Electrical Specifications 1-7
1.2.2 Environmental Specifications 1-14
1.2.3 General Specifications 1-14
1.3 CASSETTE RECORDER SPECIFICATIONS 1-15
1.4 OPTIONS AND ACCESSORIES 1-15
1.4.1 Accessories (available when ordered) 1-15
1.4.2 Options (field installable) 1-16

2 OPERATION

2.1 FRONT PANEL CONTROLS AND INDICATORS 2-1
2.1.1 Keyboard and Key Definitions 2-1
2.1.2 CRT Display 2-11
2.1.3 Cassette Tape Loader 2-12
2.1.4 Other Front Panel Controls 2-12
2.2 REAR PANEL 2-13
2.2.1 Rear Panel Controls and Connectors 2-13
2.3 INSTRUMENT SETUP 2-15
2.3.1 Power Requirements 2-15
2.3.2 Applying Power 2-17
2.3.3 Connections to Unknown 2-18
2.3.4 Test-Leads vs Test-Fixtures 2-19
2.3.5 Zero Calibration 2-19
2.3.6 Input Protection 2-21

TABLE OF CONTENTS (Continued)

2.4 MEASUREMENT FUNCTIONS 2-22
2.4.1 Programming Measurement Functions 2-23
2.4.2 Exchanging Measurement Displays 2-25
2.4.3 Series and Parallel Equivalent Circuit 2-27
2.5 TEST SIGNAL 2-32
2.5.1 Frequency 2-32
2.5.2 Signal Levels 2-35
2.5.3 Measurement Range 2-37
2.5.3.1 Range Hold 2-40
2.5.4 Continuous and Single Measurements 2-41
2.5.5 Delete 2-43
2.6 DEVIATION MEASUREMENT 2-44
2.6.1 Deviation Mode 2-47
2.6.2 Absolute or Percent Deviation 2-48
2.6.3 Exit Deviation Mode 2-49
2.7 COMPONENT SORTING 2-50
2.7.1 Bin Display 2-51
2.7.2 Programming Limits 2-52
2.7.3 Bin Counters 2-57
2.7.4 Sort Mode 2-57
2.7.5 Component Sorting Example 2-60
2.8 MEASUREMENT SPEED 2-63
2.8.1 Programming Integration Time 2-69
2.8.2 Programming Settling Time 2-71
2.8.3 Programming Measurement Speed 2-72
2.8.4 Programming Measurement Averaging 2-73
2.9 CASSETTE TAPE LOADER 2-74
2.9.1 Cassette Tape Installation 2-74
2.9.2 Cassette Tape Loader Maintenance 2-75
2.9.3 Cassette Tape Formatting 2-76
2.9.4 Cassette Tape Programming 2-77
2.9.4.1 Saving Parameters 2-77
2.9.4.2 Loading Parameter Programs 2-78
2.9.5 Program Write-Protect 2-78
2.9.6 Cassette Care 2-79
2.10 CODE KEY FUNCTION OPERATION 2-80
2.10.1 Capacitance Measurements with DC Bias 2-80
2.11 ERROR MESSAGES 2-82

3 CIRCUIT DESCRIPTIONS

3.1 INTRODUCTION 3-1
3.2 MEASUREMENT OVERVIEW 3-1
3.3 MEASUREMENT CIRCUITRY 3-4
3.3.1 Digital Circuit Card (P/N 45237) 3-4
3.3.1.1 Sine Generator 3-4
3.3.1.2 Analog-to-Digital Converter 3-6

TABLE OF CONTENTS (Continued)

3.3.2	Analog Circuit Card (P/N 45239)	3-9
3.3.2.1	Signal to the Unknown	3-9
3.3.2.2	Range Switching	3-10
3.3.2.3	Range Gain	3-11
3.3.2.4	Series Spoiling Resistors	3-12
3.3.2.5	Phase Trims	3-13
3.3.2.6	Differential Amplifier	3-13
3.3.2.7	Variable Gain Amplifier	3-14
3.3.2.8	Overload Detector	3-15
3.3.2.9	Phase Rectifier	3-16
3.4	MOTHERBOARD	3-17
3.4.1	CPU	3-18
3.4.2	Standard Communications Bus	3-20
3.4.3	Extra Bus	3-21
3.4.4	Master Clock	3-22
3.4.5	Power ON Reset	3-23
3.4.6	Video Display Generator	3-24
3.5	VIDEO CIRCUITRY	3-25
3.5.1	Signal Conditioner Circuitry (P/N 45468)	3-26
3.5.2	Video Amplifier	3-26
3.5.3	Frame Blanking	3-28
3.5.4	Horizontal Sync	3-29
3.5.5	Deflection Circuitry (P/N 45470)	3-29
3.5.6	Vertical Sync	3-30
3.5.7	Horizontal Sync	3-32
3.6	POWER SUPPLY	3-35

4 PERFORMANCE, CALIBRATION, AND MAINTENANCE

4.1	PERFORMANCE TEST	4-1
4.1.1	Frequency Accuracy Test	4-3
4.1.2	Range Resistor Accuracy Test	4-4
4.1.3	Capacitor Accuracy Test	4-6
4.1.4	Test Level Accuracy Test	4-8
4.2	CALIBRATION	4-12
4.2.1	Equipment Required	4-13
4.2.2	DC Offset Adjustments	4-13
4.2.3	Short Circuit Zero Adjustments	4-14
4.2.4	High and Low Frequency Phase (D) Adjustments	4-15
4.2.5	Calibration Summary	4-17
4.3	MAINTENANCE	4-19
4.3.1	Preventive Maintenance	4-19
4.3.1.1	Cleaning	4-19
4.3.1.2	Visual Inspection	4-20
4.3.2	Troubleshooting	4-20
4.3.2.1	Troubleshooting Aids	4-20
4.3.2.2	Troubleshooting Procedure	4-21

TABLE OF CONTENTS (Continued)

4.4 CORRECTIVE MAINTENANCE 4-24
4.4.1 Obtaining Replacement Parts 4-24
4.4.2 VideoBridge - CRT Removal/Replacement 4-25
4.4.2.1 CRT Handling, Storage, and Disposal Precautions 4-25
4.4.2.2 Removal/Replacement Procedure 4-27
4.4.3 Component Replacement 4-32
4.5 REPACKAGING FOR SHIPMENT 4-33

5 PARTS LISTS AND DIAGRAMS

5.1 MAINFRAME PARTS (PART NO. 32110) 5-1
5.2 FRONT END SUB ASSEMBLY (PART NO. 46096) 5-2
5.2.1 Keyboard-to-Motherboard Connector Cable Assembly (Part No. 47112) 5-3
5.2.2 Keyboard Circuit Assembly (Part No. 45573) 5-4
5.3 CRT SUB ASSEMBLY (PART NO. 46095) 5-5
5.3.1 CRT Connector Cable Assembly (Part No. 46504) 5-7
5.3.2 Deflection-to-Signal Conditioner Cable Assembly (Part No. 47116) 5-8
5.3.3 Deflection Circuit Assembly (Part No. 45470) 5-9
5.3.4 Signal Conditioner Circuit Assembly (Part No. 45468) 5-12
5.4 MOTHERBOARD CIRCUIT ASSEMBLY (PART NO. 45577) 5-14
5.4.1 Motherboard-to-Power Supply Interconnect Cable Assembly (Part No. 47111) 5-16
5.4.2 Motherboard-to-CRT Interconnect Cable Assembly (Part No. 47110) 5-17
5.4.3 Digital Circuit Assembly (Part No. 45237) 5-18
5.4.4 Analog Circuit Assembly (Part No. 45239) 5-20
5.4.5 Tape Deck-to-RS232 Cable Assembly (Part No. 47254) 5-24
5.4.6 RS232/Cassette Interface Circuit Assembly (Part No. 45905) 5-25

A OPTIONS OPERATION

A.1 MODEL 2100/2110 HANDLER INTERFACE OPTION A-1
A.1.1 Hardware Included A-1
A.1.2 Installation A-2
A.1.3 Operation A-3
A.1.4 Calibration A-6
A.2 MODEL 2100/2110 GENERAL PURPOSE INTERFACE BUS (GPIB) OPTION A-7
A.2.1 Introduction A-7
A.2.2 Bus Structure A-7
A.2.3 Number of Devices A-9
A.2.4 Cable Length A-9

	A.2.5 Electrical Specifications	A-10
	A.2.6 Signal Lines	A-10
	A.2.7 Bus Connector	A-13
	A.2.8 Instrument Address Selection	A-13
	A.2.9 GPIB Option Installation	A-14
	A.2.10 GPIB Interface Programming	A-16
	A.2.10.1 Instrument Setup	A-17
	A.2.10.2 Result Accumulation	A-24
	A.2.11 Calibration	A-28
A.3	RS-232C INTERFACE OPTION	A-29
	A.3.1 0-20mA Current Loop Systems	A-29
	A.3.2 RS-232C Systems	A-29
	A.3.2.1 Channel A	A-30
	A.3.2.2 Channel B	A-30
	A.3.2.2.1 RS-232C Signal Flow	A-31
	A.3.3 Cable Length	A-33
	A.3.4 Signal Levels	A-33
	A.3.5 Bus Connector	A-34
	A.3.6 Selecting the Baud Rate	A-35
	A.3.7 Data Format	A-36
	A.3.8 RS-232C Circuit Card Installation	A-36
	A.3.9 RS-232C Interface Programming	A-38
	A.3.9.1 Instrument Setup	A-39
	A.3.9.2 Result Accumulation	A-46
	A.3.10 Calibration	A-49

LIST OF ILLUSTRATIONS

Fig. No.	Title	Page No.
S-1	Warning Label Locations	S-4
1-1	Model 2100/2110 Impedance Formulas	1-3
2-1	Model 2110 Front panel	2-1
2-2	CRT Display Formats	2-11
2-3	Rear Panel	2-13
2-4	Line Voltage Settings	2-15
2-5	Power Cord Connectors	2-16
2-6	Power ON/OFF	2-17
2-7	Connection to Unknown	2-18
2-8	Measurement Display	2-24
2-9	Series and Parallel Equivalent Circuit Modes	2-29
2-10	Status Display	2-50
2-11	Sorting Mode Preparation Checklist	2-58
2-12	Measurement Sequence	2-63
2-13	Sample Time	2-64
2-14	Cycle Time	2-65
2-15	Measurement Time	2-66

2-16	Measurement Averaging	2-66
2-17	Cassette Tape Installation	2-75
2-18	Cleaning Recording/Playback Heads	2-76
2-19	Cassette Tape File Areas	2-77
2-20	Program Write-Protect Feature	2-79
2-21	Capacitance Measurements with Bias	2-81
3-1	Block Diagram	3-1
3-2	Sine Generator Block Diagram	3-4
3-3	AID Converter Simplified Diagram	3-6
3-4	Level Set, Filter, and Power Amplifier Block Diagram	3-9
3-5	Range Switching Block Diagram	3-10
3-6	Range Gain Amplifier	3-11
3-7	Series Spoiling Resistors	3-12
3-8	Phase Trims	3-13
3-9	Differential Amplifier	3-13
3-10	Variable Gaim Amplifier	3-14
3-11	Overload Detector	3-15
3-12	Phase Rectifier	3-16
3-13	Motherboard Simplified Diagram	3-17
3-14	Master Clock	3-22
3-15	Power ON Reset	3-23
3-16	Video Circuit Block Diagram	3-25
3-17	Video Amplifier	3-26
3-18	Video amplifier with Blanking	3-28
3-19	Horizontal Sync Circuiting	3-29
3-20	Vertical Sawtooth Generator	3-30
3-21	Current Mirror	3-31
3-22	Vertical Drive Amplifier	3-31
3-23	Horizontal Drive Amplifier	3-32
3-24	Horizontal Drive and Flyback Transformer	3-33
3-25	40VDC Power Supply	3-33
3-26	Horizontal Deflection Circuitry	3-34
4-1	Circuit Assembly and Trimmer Locations	4-17
5-1	Keyboard-to-Motherboard Cable Assembly (Part No. 47112)	5-3
5-2	Keyboard Circuit Assembly (Part No. 45573)	5-4
5-3	CRT Connector Cable Assembly (Part No. 46504)	5-7
5-4	Deflection-to-Signal Conditioner Cable Assembly (Part No. 47116)	5-8
5-5	Deflection Circuit Assembly (Part No. 45470)	5-11
5-6	Signal Conditioner Circuit Assembly (Part No. 45468)	5-13
5-7	Motherboard-to-Power Supply Cable Assembly (Part No. 47111)	5-16
5-8	Motherboard-to-CRT Cable Assembly (Part No. 47110)	5-17
5-9	Digital Circuit Assembly (Part No. 45237)	5-18
5-10	Analog Circuit Assembly (Part No. 45239)	5-22
5-11	Tape Deck-to-RS232 Cable Assembly (Part No. 47254)	5-24

5-12	RS232 Cassette Interface Circuit Assembly (Part No. 45905)	5-26
5-13	Memory Expansion Circuit Assembly (Part No. 46193)	5-28
A-1	Handler Interface Circuit Assembly Location	A-2
A-2	Handler Interface Option Signal Timing	A-4
A-3	Handler Interface Circuit Card	A-6
A-4	A Typical IEEE-488 Bus Based System	A-8
A-5	IEEE-488 Bus Interconnection Configurations	A-9
A-6	A Typical Handshake Cycle	A-11
A-7	GPIB Address Switches	A-14
A-8	GPIB Circuit Card Location	A-15
A-9	Motherboard Revision Letter Location	A-16
A-10	RS-232C Signal Flow	A-32
A-11	RS-232C with Request to Send, Clear to Send, and Data Set Ready	A-32
A-12	Selecting the Baud Rate	A-35
A-13	Data Format	A-36
A-14	RS-232C Interface Circuit Card Location	A-37
A-15	Motherboard Revision Letter Location	A-38

LIST OF TABLES

Table No.	Title	Page No.
1-1	Capacitance Measurement Accuracy	1-8
1-2	Inductance Measurement Accuracy	1-9
1-3	Resistance/Conductance Measurement Accuracy	1-10
1-4	Impedance Ranges vs. Test Signal Level	1-11
2-1	Inspect Protection Limits	2-21
2-2	Measurement Functions	2-22
2-3	Test Frequencies	2-33
2-4	Test Level vs. Impedance	2-35
2-5	Model 2100/2110 Impedance Ranging Chart	2-38
2-6	Reactance Chart	2-39
2-7	Integration Time Chart	2-69
2-8	Measurement Speeds	2-72
3-1	Standard Bus Signals and Card Edge Connections	3-20
3-2	Extra Bus Signals and Card Edge Connections	3-21
A-1	VideoBridge Outputs Connector Wiring	A-5
A-2	IEEE-488 Bus Connector Contact Assignments	A-13
A-3	Model 2100/2110 Remote Setup Dictionary	A-18
A-4	RS-232C Receive and Transmit Signal Levels	A-33
A-5	RS-232C Control Signal Levels	A-33
A-6	RS-232C Pin Assignments	A-34
A-7	Model 2100/2110 Remote Setup Dictionary	A-40

SECTION S
SAFETY INFORMATION

S.1 INTRODUCTION

Read and follow the CAUTIONS and WARNINGS in this manual. They are designed to emphasize safety during all phases of operation and maintenance.

S.2 Safety Terms And Meanings:

CAUTION -- Statements identify conditions or practices that could result in damage to the equipment or property.

WARNING -- Statements identify conditions or practices that could result in personal injury or loss of life. In addition, damage to the equipment or other property may result.

DANGER -- Indicates a personal injury hazard is near the marking.

S.3 The following WARNINGS appear in this manual:

WARNING

ELECTRICAL SHOCK HAZARD EXISTS WHEN BIAS SUPPLIES ARE CONNECTED TO THIS INSTRUMENT. WHEN EXTERNAL BIAS SUPPLIES ARE ATTACHED, THE BIAS VOLTAGES ARE PRESENT ON THE REAR PANEL BNC CONNECTORS. USE ONLY BIAS VOLTAGES UP TO +5ØVDC WITH EACH BIAS SUPPLY CURRENT LIMITED AT 1ØØmA. DO NOT TOUCH, CONNECT, OR DISCONNECT THE UNKNOWN OR BNC CABLES WHILE BIAS VOLTAGES ARE APPLIED.

WARNING

TO PREVENT POSSIBLE ELECTRICAL SHOCK OR DAMAGE TO THE INSTRUMENT, CHECK LOCAL ELECTRICAL STANDARDS BEFORE SELECTING A POWER CORD. THE INFORMATION PRESENTED HERE MAY NOT BE CORRECT FOR ALL LOCATIONS WITHIN THE REFERENCED AREAS.

WARNING

ALL PARTS OF THE POWER SUPPLY ASSEMBLY INCLUDING INPUT CIRCUIT COMMON ARE AT OR ABOVE POWER LINE VOLTAGE. THE ENERGY AVAILABLE AT ANY POINT ON THE ASSEMBLY MAY BE LIMITED ONLY BY THE INPUT FUSE. DO NOT ATTEMPT SERVICE OPERATIONS. FAILURE TO OBSERVE THIS WARNING MAY RESULT IN SEVERE INJURY OR DEATH.

WARNING

TO AVOID PERSONAL INJURY FROM ELECTRIC SHOCK DO NOT REMOVE INSTRUMENT COVERS OR PERFORM ANY MAINTENANCE OTHER THAN DESCRIBED IN THIS MANUAL. INSTALLATION AND MAINTENANCE PROCEDURES DESCRIBED IN THIS MANUAL ARE TO BE PERFORMED BY QUALIFIED SERVICE PERSONNEL ONLY.

WARNING

REMOVAL OF INSTRUMENT COVERS MAY CONSTITUTE AN ELECTRICAL HAZARD AND SHOULD BE ACCOMPLISHED BY QUALIFIED SERVICE PERSONNEL ONLY.

WARNING

TO AVOID ELECTRIC SHOCK FROM DANGEROUSLY HIGH VOLTAGES. USE THE FOLLOWING PROCEDURES ONLY WHEN TROUBLESHOOTING THE ANALOG AND DIGITAL MEASUREMENT PORTIONS OF THIS INSTRUMENT. DO NOT USE THIS PROCEDURE TO TROUBLESHOOT THE POWER SUPPLY OR CRT CIRCUITRY.

WARNING

HANDLE THE CRT WITH CARE. ROUGH HANDLING OR SCRATCHING CAN CAUSE THE CRT TO IMPLODE. TO AVOID PERSONAL INJURY FROM IMPLOSION WEAR PROTECTIVE GOGGLES AND CLOTHING WHEN WORKING WITH THE CRT. ONLY WORK WITH THE CRT IF YOU ARE QUALIFIED TO DO SO.

WARNING

THE CRT IS CAPABLE OF STORING A HIGH VOLTAGE CHARGE AFTER POWER HAS BEEN REMOVED. TO PREVENT PERSONAL INJURY FROM ELECTRIC SHOCK, USE AN OSHA OR UL APPROVED SHORTING STRAP TO DISCHARGE ALL HIGH VOLTAGE POINTS TO CHASIS GROUND. THIS PROCEDURE MUST BE PERFORMED BY QUALIFIED PERSONNEL ONLY.

WARNING

DISCONNECT ALL POWER TO THE INSTRUMENT BEFORE REPLACING COMPONENTS. FAILURE TO DO SO MAY RESULT IN ELECTRICAL SHOCK.

CAUTION

BECAUSE OF DIFFERING POWER REQUIREMENTS, INSTRUMENTS SHIPPED OUTSIDE THE UNITED STATES MAY REQUIRE A DIFFERENT POWER CORD CONNECTOR. WHEN PLACING A NEW CONNECTOR ON THE POWER CORD, CARE MUST BE TAKEN TO ASSURE THE WIRES ARE CONNECTED PROPERLY. THE GREEN OR GREEN-WITH-YELLOW-STRIPE WIRE IS ALWAYS CONNECTED TO EARTH GROUND. THE WHITE OR LIGHT-BLUE WIRE IS CONNECTED TO THE NEUTRAL SIDE OF THE POWER LINE. AND, THE BLACK OR BROWN WIRE IS CONNECTED TO THE HIGH SIDE OF THE POWER LINE. FIGURE 2-5 ILLUSTRATES THE AVAILABLE POWER CORDS, WHICH MAY BE USED IN VARIOUS COUNTRIES INCLUDING THE STANDARD POWER CORD FURNISHED WITH THE INSTRUMENT. ELECTRICAL CHARACTERISTICS AND COUNTRIES USING EACH CONNECTOR ARE LISTED IN THE FIGURE.

CAUTION

WHEN PERFORMING ANY CALIBRATION OR MAINTENANCE OPERATION, DO NOT REMOVE OR REPLACE CIRCUIT CARDS WHILE THE POWER IS TURNED ON. FAILURE TO TURN POWER OFF MAY RESULT IN ELECTRIC SHOCK OR DAMAGE TO THE INSTRUMENT.

CAUTION

AVOID THE USE OF CHEMICAL CLEANING AGENTS WHICH MIGHT DAMAGE THE PLASTICS USED IN THIS UNIT. DO NOT APPLY ANY SOLVENT CONTAINING KETONES, ESTERS, OR HALOGENATED HYDROCARBONS. TO CLEAN, USE ONLY WATER SOLUBLE DETERGENTS, ETHYL, METHYL, OR ISOPROPYL ALCOHOL.

CAUTION

DO NOT USE AN OHMMETER SCALE THAT HAS A HIGH INTERNAL CURRENT. HIGH CURRENTS MAY DAMAGE THE DIODES UNDER TEST.

DANGER

THE VIDEO CIRCUITRY CONTAINS DANGEROUSLY HIGH VOLTAGE. EXERCISE EXTREME CARE TO AVOID POSSIBLE ELECTRIC SHOCK WHICH MAY RESULT IN SEVERE INJURY OR DEATH.

S.4 The following WARNING labels appear on the instrument, see Figure S-1 for their locations.

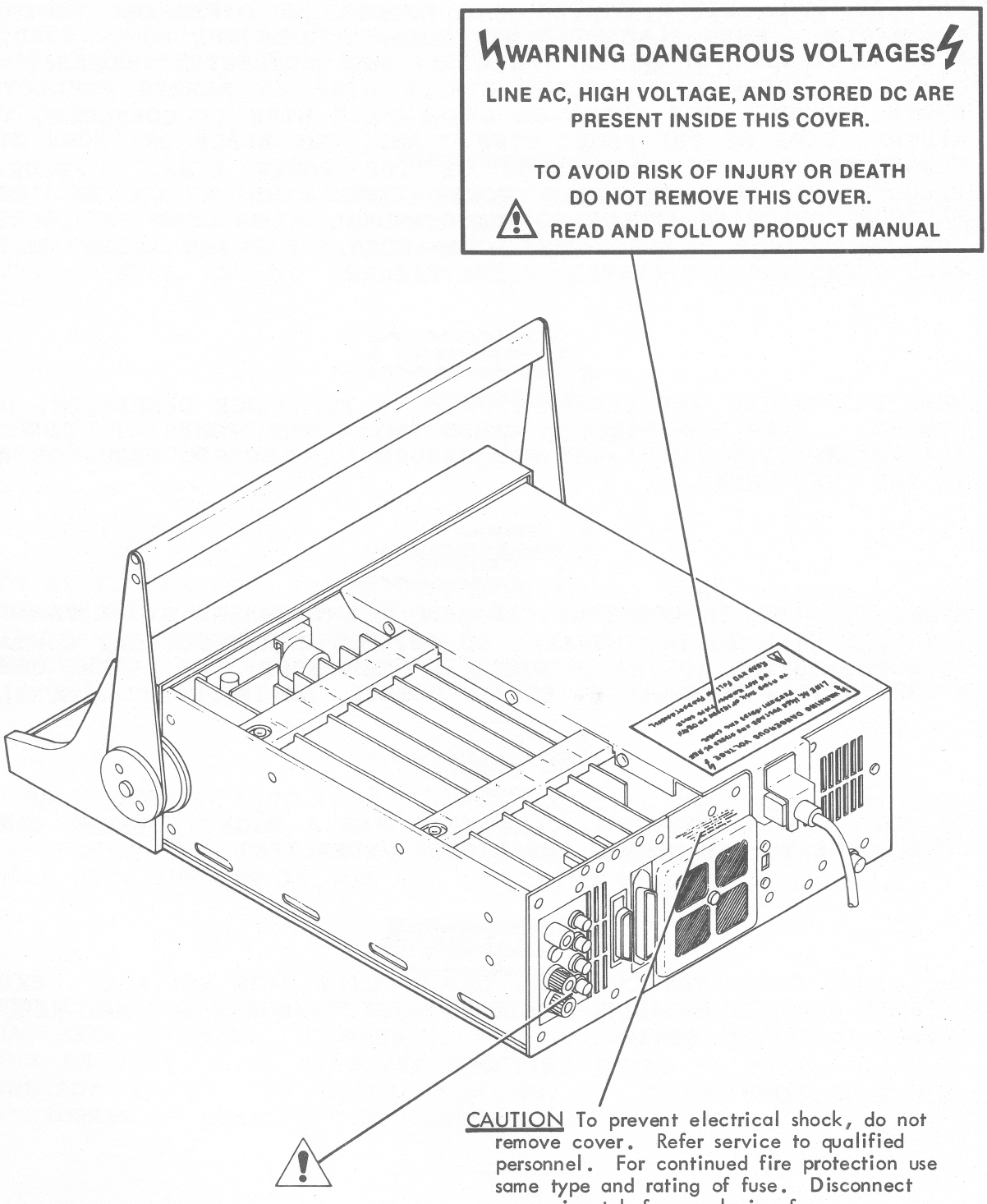

Figure S-1. Warning Label Locations

SECTION 1
DESCRIPTION

1.1 INTRODUCTION

ESI's Model 2100/2110 Auto LRC Meters are two extremely versatile impedance measuring instruments. They feature variable test frequencies (≈3000), programmable test-signal levels, component sorting, and CRT displays. They measure inductors (L), resistors (R), capacitors (C), and display up to 10 impedance characteristics in 26 different combinations. Basic accuracy of 0.05% added to the widest ranges available for passive component measurements make the 2100/2110 the most informative impedance measuring instruments available today.

Mass storage for test parameter setups and measurement results is the feature that set the Model 2110 apart from the Model 2100. The 2110 has a cassette tape loader that uses mini-cassette tapes for storing and reloading test parameter programs.

The 2100/2110 measurement system is basically composed of a frequency selectable, digital sinewave generator, a test-level regulator, precision range resistors, a phase-sensitive voltmeter, and a charge balancing analog-to-digital converter. All measurements, calculations, and displays take place under the watchful eye of the 2100/2110's Z80 microcomputer.

The level regulator's sinewave output is imposed across both the device-under-test and a selected precision, standard range resistor. The resulting voltage-drops are measured in both phase and amplitude by the phase-sensitive voltmeter. The phase-sensitive voltmeter produces four voltage outputs labeled:

$V_{\emptyset}$ or V unknown $\emptyset°$
V_1 or V unknown $90°$
V_2 or V standard $\emptyset°$
V_3 or V standard $90°$

These voltages are serially processed by the A/D converter with resistance (R) and reactance (X), when in the mA mode, or conductance (G) and susceptance (B), when in the mV mode, computed by the Z8Ø CPU.

mV MODE

$$G_{unknown} = \frac{V_{\emptyset} V_2 + V_1 V_3}{(V_{\emptyset})^2 + (V_1)^2} \times R_{standard}$$

$$B_{unknown} = \frac{V_{\emptyset} V_3 - V_1 V_2}{(V_{\emptyset})^2 + (V_1)^2} \times R_{standard}$$

mA MODE

$$R_{unknown} = \frac{V_{\emptyset} V_2 + V_1 V_3}{(V_2)^2 + (V_3)^2} \times R_{standard}$$

$$X_{unknown} = \frac{V_1 V_2 - V_{\emptyset} V_3}{(V_2)^2 + (V_3)^2} \times R_{standard}$$

All other impedance parameters are computed using the results of these measurements, the test frequency, and the formulas in Figure 1-1.

MILLIAMPERE MODE WITH SHORT CIRCUIT CORRECTION (RANGE 0 → 3)	MILLIVOLT MODE WITH OPEN CIRCUIT CORRECTION (RANGE 4 → 8)
$R_s = (R_s)m - (R_s)_0$	$G_p = (G_p)m - (G_p)_0$
$X_s = (X_s)m - (X_s)_0$	$B_p = (B_p)m - (B_p)_0$
$D = \frac{R_s}{\lvert X_s \rvert}$	$D = \frac{G_p}{\lvert B_p \rvert}$
$Q = \frac{\lvert X_s \rvert}{R_s}$	$Q = \frac{\lvert B_p \rvert}{G_p}$
$L_s = \frac{X_s}{2\pi f}$	$L_s = \frac{-B_p}{2\pi f(G_p^2 + B_p^2)}$
$L_p = \frac{R_s^2 + X_s^2}{2\pi f X_s}$	$L_p = \frac{-1}{2\pi f B_p}$
$C_s = \frac{-1}{2\pi f X_s}$	$C_s = \frac{G_p^2 + B_p^2}{2\pi f B_p}$
$C_p = \frac{-X_s}{2\pi f(R_s^2 + X_s^2)}$	$C_p = \frac{B_p}{2\pi f}$
$B_p = \frac{-X_s}{R_s^2 + X_s^2}$	$X_s = \frac{-B_p}{G_p^2 + B_p^2}$
$G_p = \frac{R_s}{R_s^2 + X_s^2}$	$R_s = \frac{G_p}{G_p^2 + B_p^2}$
$\lvert Z \rvert = \sqrt{R_s^2 + X_s^2}$	$\lvert Z \rvert = \frac{1}{\sqrt{G_p^2 + B_p^2}}$
$\lvert Y \rvert = \frac{1}{\sqrt{R_s^2 + X_s^2}}$	$\lvert Y \rvert = \sqrt{G_p^2 + B_p^2}$

R = Resistance
s = Series Measurement
m = Measured value
0 = Zero correction value
G = Conductance
p = Parallel measured
X = Reactance
B = Susceptance
D = Dissipation factor
Q = Quality factor
L = Inductance
f = Frequency
C = Capacitance
Z = Impedance
Y = Admittance

Figure 1-1. Model 2100/2110 Impedance Formulas

The 2100/2110 also offers a wide variety of test conditions: ≈3000 test frequencies (between 20Hz and 20kHz), test signal levels (10mV to 1500mV or 1mA to 100mA), settling times to 1500ms, integration time to 600ms or choose from 3 preset combinations of settling time, integration time, and number of measurements averaged are programmed for FAST, MEDIUM, or SLOW operation, and select up to 20 measurements for averaging.

Special measurement features built into the instruments include: displayed deviations from a nominal value in either absolute or percentage terms: component sorting mode that characterizes components into 10 tolerance categories or as a reject while counting the number of components that fall into each category; and automatic zero calibration for test-lead or test-fixture impedances.

Communication interfacing -- the meaningful transfer of information between instrument and its operator is the reason for the cathode-ray tube (CRT) display. The 5-inch CRT provides two levels of information and two display formats. In the direct display format, the CRT provides large easy-to-read alphanumeric characters to highlight up to 6-digits of measurement information, and small alphanumeric characters to display the settings for frequency, nominal value, measurement mode, test signal level, settling time, integration time, and number of measurements averaged. The versatility of the instrument is again exemplified by the CRT's display of component sorting information. It simultaneously displays + and - limits for all component tolerance bins, and their component counters capable of up to 64000 counts for each bin.

Three, four, five, or six digits of measurement information can be displayed on the CRT. The number of digits displayed is related to the resolution contained in the A/D conversion process. More commonly, the number of digits displayed is a product of integration time and the number of measurements averaged. Three digits are displayed when integration time is 4ms or less. Integration times greater than 4ms displays four digits, while MEDium measurement speed (50ms integration time) provides five displayed digits. A full six digits are displayed anytime the product of integration time and measurements averaged is ≥500ms (50ms integration time and 10 averages, or 25ms integration time and 20 averages).

The Model 2100/2110 offers maximum flexibility with a wide range of options. All options are field installable and are designed to tailor instrument operation to specific testing requirements. They operate as stand-alone benchtop testers or can be used with auxiliary handling equipment and easily fits into sophisticated automatic testing systems.

(BLANK)

1.2 SPECIFICATIONS

1.2.1 Electrical Specifications

Measurement Functions:

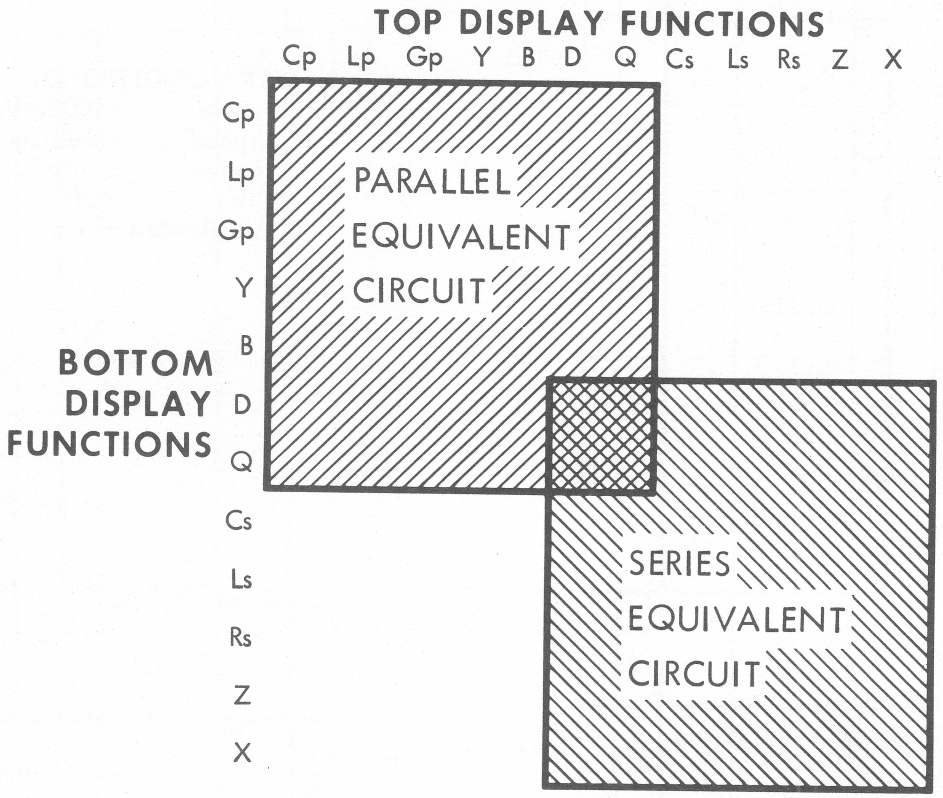

NOTE: Any top display can be displayed with any bottom display within the shaded areas.

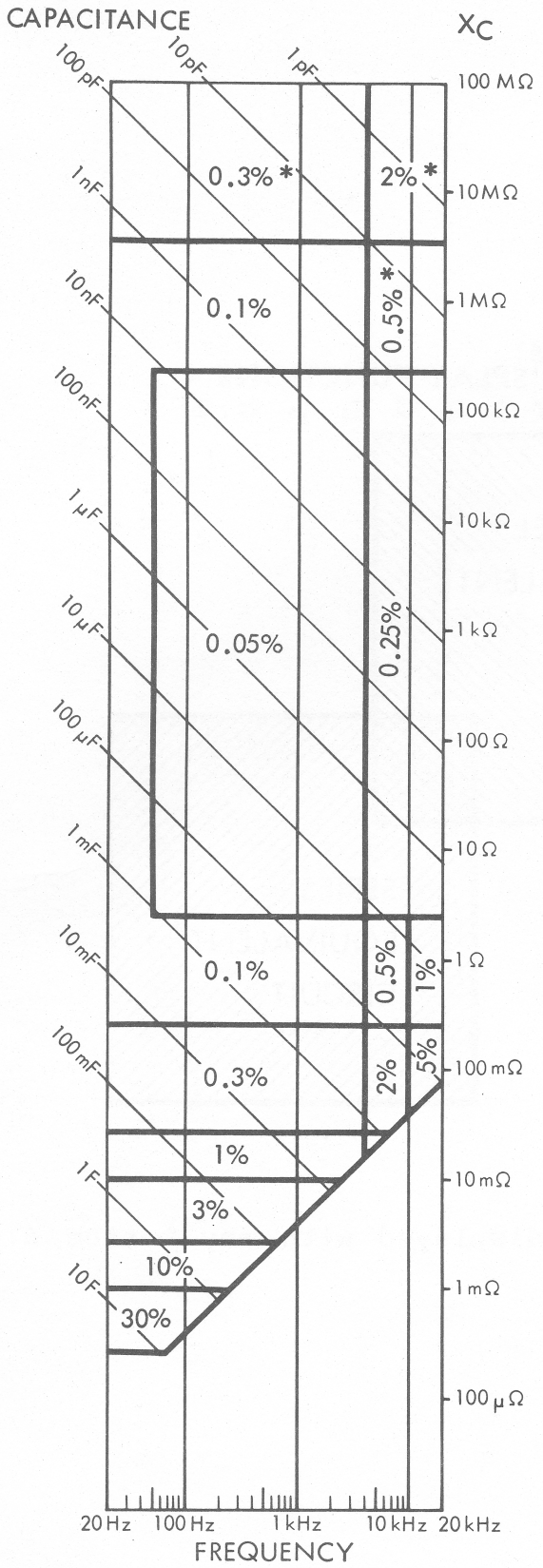

$$* + \left(\frac{0.01\ \text{pF}}{f(\text{kHz})} + 0.01\ \text{pF} \right)$$

If $D > 1$, add $\left[0.05\% \left(1 + 0.3D^2\right)\right]$ to accuracies shown

TEST CONDITIONS:

Level	-1000 mV/100 mA
Speed	-Medium
Range	-Auto
Bias	-Off
Calibrated	-Zero

V_{test} = 800 mV to 1500 mV
I_{test} = 50 mA to 100 mA

For V_{test} <800 mV Multiply Basic Accuracy by $\left(1 + \frac{300}{\text{mV}}\right)\left(1 + \frac{\text{kHz}}{10}\right)$

For I_{test} <50 mA Multiply Basic Accuracy ($Z > 16\Omega$) by $\left(1 + \frac{300}{\text{mA} \times Z(\Omega)}\right)$

For I_{test} <50 mA Multiply Basic Accuracy ($Z \leq 16\Omega$) by $\left(1 + \frac{30}{\text{mA}}\right)$

Table 1-1. Capacitance Measurement Accuracy

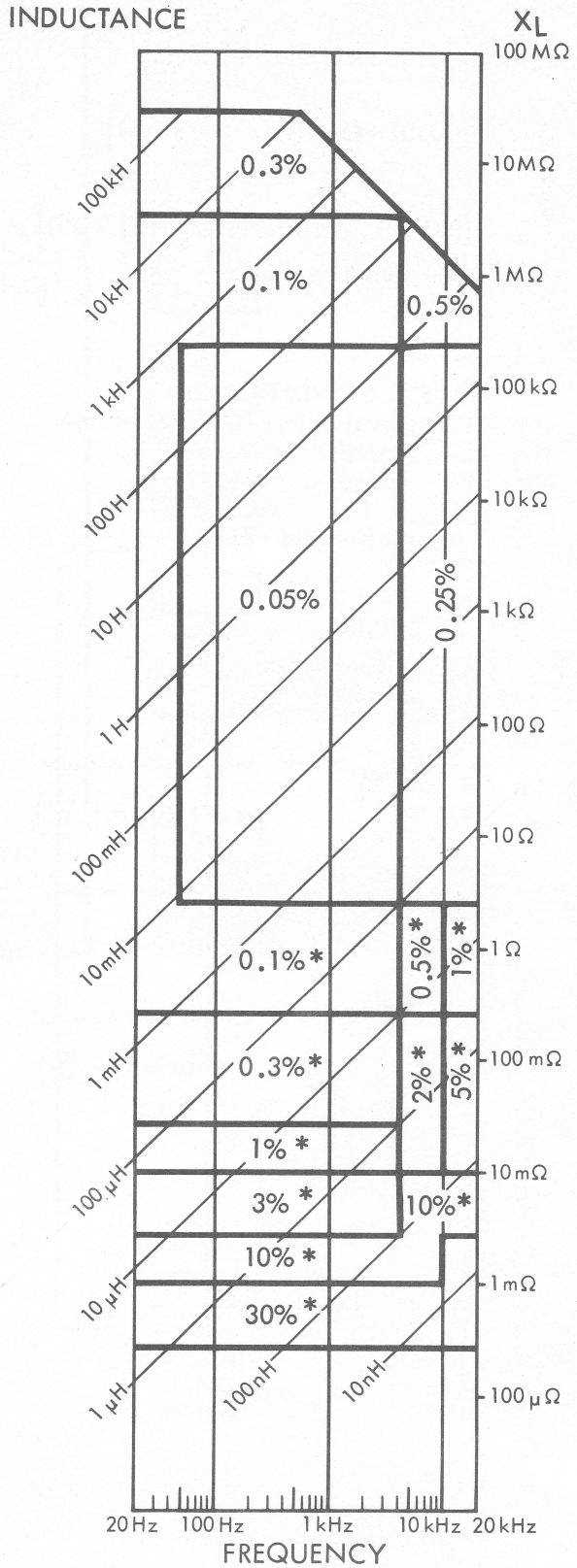

$$* + \left(\frac{0.01\mu H}{f(kHz)} + 0.01\mu H \right)$$

If $D > 1$, add $\left[0.1\% \ (1+0.3D^2)\right]$ to accuracies shown

TEST CONDITIONS:

Level	-1000 mV/100 mA
Speed	-Medium
Range	-Auto
Bias	-Off
Calibrated	-Zero

V_{test} = 800 mV to 1500 mV
I_{test} = 50 mA to 100 mA

For V_{test} <800 mV Multiply Basic Accuracy by $\left(1 + \frac{300}{mV}\right)\left(1 + \frac{kHz}{10}\right)$

For I_{test} <50 mA Multiply Basic Accuracy ($Z > 16\Omega$) by $\left(1 + \frac{300}{mA \times Z(\Omega)}\right)$

For I_{test} <50 mA Multiply Basic Accuracy ($Z \leq 16\Omega$) by $\left(1 + \frac{30}{mA}\right)$

Table 1-2. Inductance Measurement Accuracy

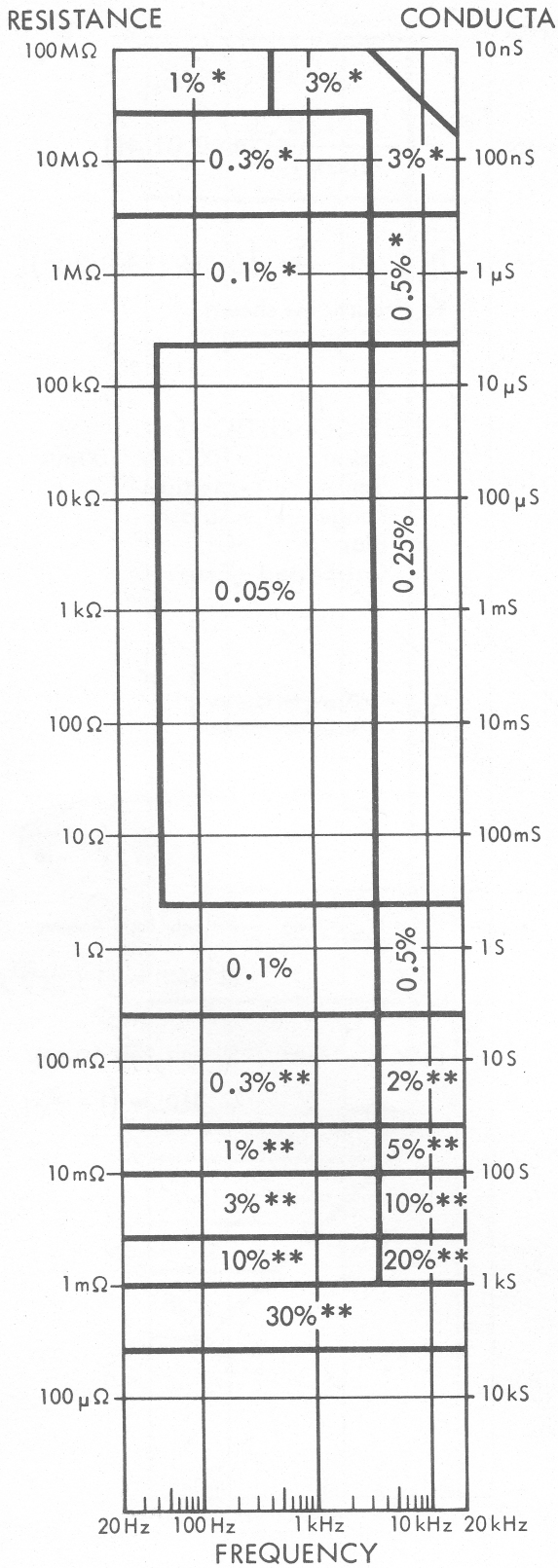

$*+\left[0.1\,nS \times f(kHz) + 0.5\,nS\right]$

$**+\left[0.01\,m\Omega \times f(kHz) + 0.1\,m\Omega\right]$

If $Q > 1$, add $\left[0.1\%\ (1+0.3Q^2)\right]$ to accuracies shown

TEST CONDITIONS:

Level	-1000mV/100mA
Speed	-Medium
Range	-Auto
Bias	-Off
Calibrated	-Zero

V_{test} = 800mV to 1500mV
I_{test} = 50mA to 100mA

For V_{test} <800mV Multiply Basic Accuracy by $\left(1 + \frac{300}{mV}\right)\left(1 + \frac{kHz}{10}\right)$

For I_{test} <50mA Multiply Basic Accuracy ($Z > 16\Omega$) by $\left(1 + \frac{300}{mA \times Z(\Omega)}\right)$

For I_{test} <50mA Multiply Basic Accuracy ($Z \leq 16\Omega$) by $\left(1 + \frac{30}{mA}\right)$

Table 1-3. Resistance/Conductance Measurement Accuracy

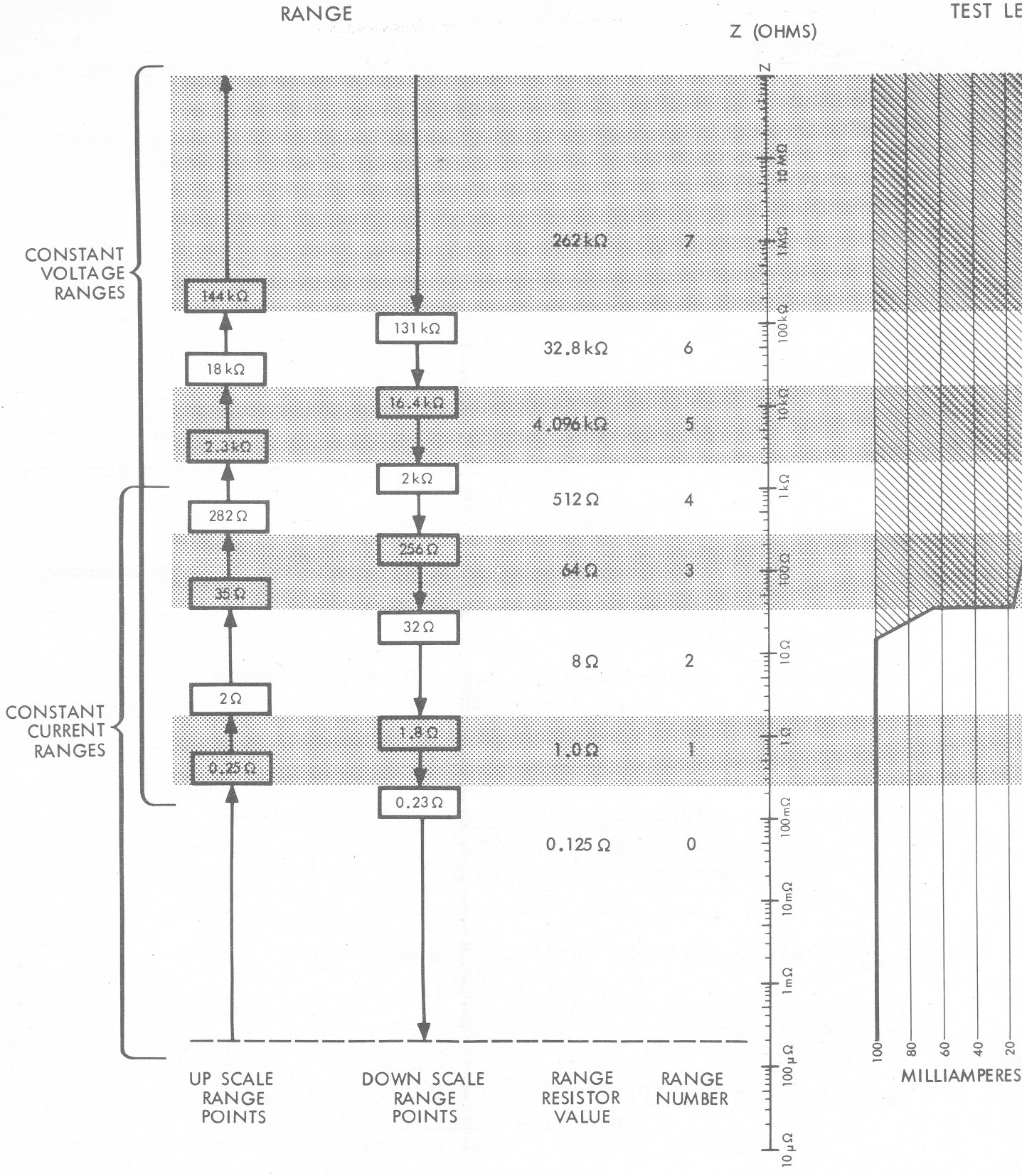
RANGE
Z (OHMS)
TEST LE
CONSTANT VOLTAGE RANGES
CONSTANT CURRENT RANGES
144 kΩ
18 kΩ
2.3 kΩ
282 Ω
35 Ω
2 Ω
0.25 Ω
131 kΩ
16.4 kΩ
2 kΩ
256 Ω
32 Ω
1.8 Ω
0.23 Ω
262 kΩ
32.8 kΩ
4.096 kΩ
512 Ω
64 Ω
8 Ω
1.0 Ω
0.125 Ω
7
6
5
4
3
2
1
0
10 MΩ
1 MΩ
100 kΩ
10 kΩ
1 kΩ
100 Ω
10 Ω
1 Ω
100 mΩ
10 mΩ
1 mΩ
100 µΩ
10 µΩ
100
80
60
40
20
MILLIAMPERES
UP SCALE RANGE POINTS
DOWN SCALE RANGE POINTS
RANGE RESISTOR VALUE
RANGE NUMBER

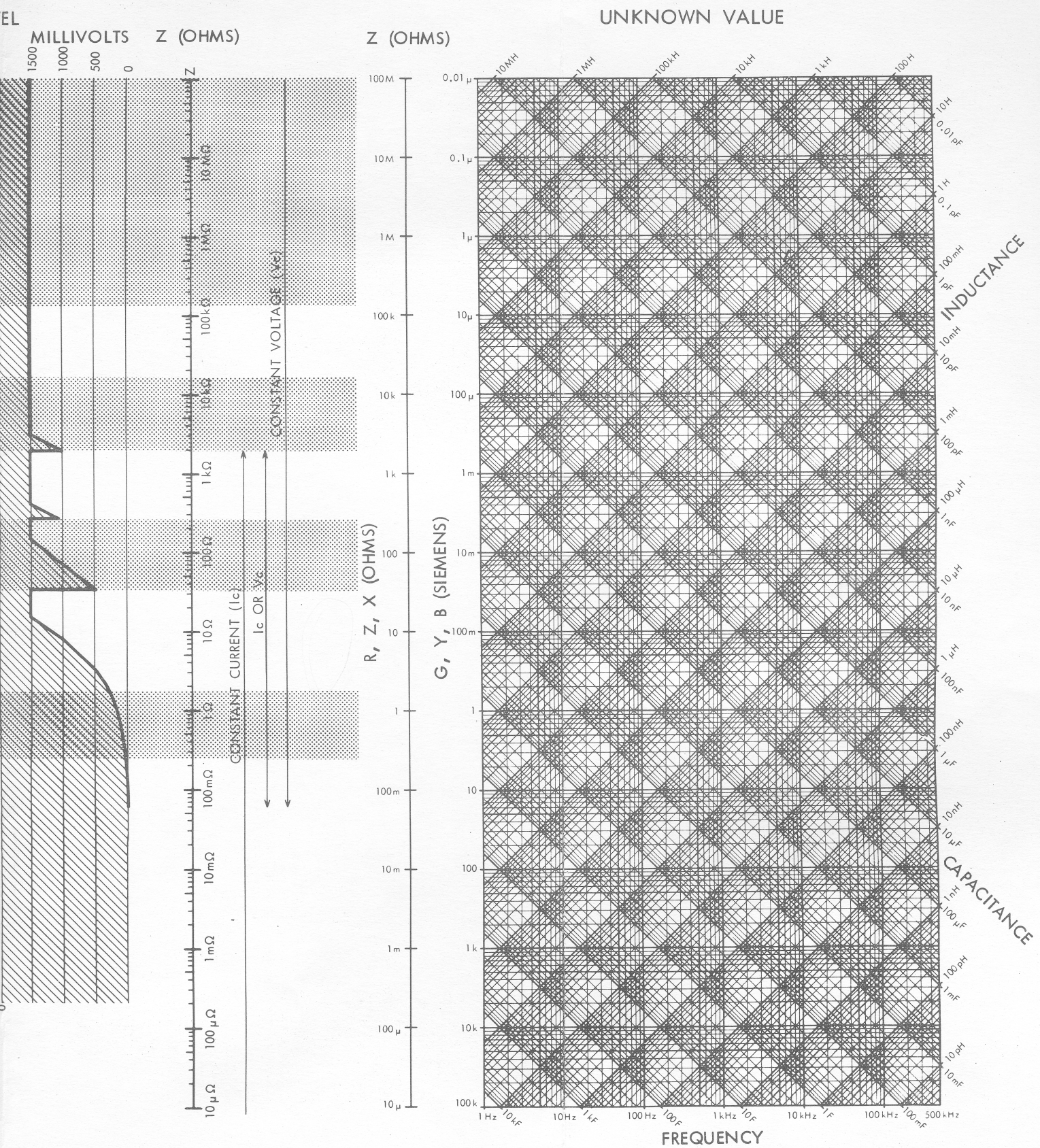

Table 1-4. Impedance Ranges vs. Test Signal Level

BASIC D ACCURACY

Capacitance: $\pm$ Ø.ØØØ25 $(1+D^2)$*

Inductance: $\pm$ Ø.ØØØ35 $(1+D^2)$*

BASIC Q ACCURACY

All Components $\pm$ Ø.Ø35 * $\left(Q + \frac{1}{Q}\right)$%*

*Correction Factors

For HI Z ($Z \geq 10M\Omega$) add $\left[Ø.ØØØ5 \left(\frac{Z(M\Omega)}{10M\Omega}\right)\right]$ to basic D or Q accuracy

For LO Z ($Z \leq 1\Omega$) add $\left[Ø.ØØØ5 \left(\frac{1\Omega}{Z(\Omega)}\right)\right]$ to basic D or Q accuracy

For Frequencies > 1ØØØHz multiply basic D or Q accuracy by $\left(1 + \frac{Hz}{3ØØØ}\right)$

For Frequencies < 2ØØHz multiply basic D or Q accuracy by $\left(1 + \frac{6Ø}{Hz}\right)$

For V_{test} < 8ØØmV multiply basic D or Q accuracy by $\left(1 + \frac{3ØØ}{mV}\right)$

For $I_{test} \leq$ 1ØØmA multiply basic D or Q accuracy by $\left(1 + \frac{3ØØ}{mA \times Z(\Omega)}\right)$

TEST SIGNALS

Frequency	≈ 2998 programmable between 20Hz and 20kHz. f = 60kHz/N Where: N is an integer 3 ≤ N ≤ 3000
Accuracy	±0.01%

Level Set

Voltage Level	10mV to 1500mV RMS in 10mV steps
Accuracy	±(4% + 10mV), Z > 2Ω ±(4% + 2mV), Z < 2Ω
Current Level	1mA to 100mA RMS in 1mA steps
Accuracy	±(4% + 1mA), Z < 32Ω ±(4% + 0.2mA), Z > 32Ω

MEASUREMENT SPEED

	SETL	I.T.	AVG
Fast	5ms	10ms	1
Medium	50ms	50ms	1
Slow	50ms	50ms	5

OR

Integration time (I.T.)	$n(\frac{1}{f})$ Where: n = integer between 1 and 256 f = Test Frequency
Settling Time (SETL)	2ms to 1500ms in 1ms steps
Measurement Averaging (AVG)	1 to 20 measurements

BIAS

Voltage	+50VDC maximum
Fuse	0.5A, 250V, 3AG Fast Blow

1.2.2 Environmental Specifications

HUMIDITY

Operating	20% to 80% Relative
Storage	0% to 90% Non-Condensing

TEMPERATURE

Operating	10°C to 45°C (50°F to 113°F)
Storage	-40°C to 71.1°C (-40°F to 160°F)

1.2.3 General Specifications

POWER REQUIREMENTS

Line power	115VAC +15% -22% 48/66Hz 230VAC + 9% -22% 48/66Hz
Powerline Fuse	2A, 250V, Slow Blow for 115VAC operation, and 1A, 250V Slow Blow for 230V operation
Power Consumption	≈100W

DIMENSIONS

Height	133mm (5.25 in)
Width	324mm (12.75 in)
Length	464mm (18.25 in)
Weight	28 lb

1.3 CASSETTE RECORDER SPECIFICATIONS

Tape Cassette Type:	Braemar Computer Devices Type CMC-50 (50 ft. long)
File Storage Information:	All displayed measurement parameters, binning limits, and bin counter information.
Storage Capacity:	30 files total (15 files per side)

1.4 OPTIONS AND ACCESSORIES

1.4.1 Accessories (available when ordered)

	ESI Part No.
Model 2003 Sorting Fixture, 4-terminal (requires 4 cables).	32003
Model 2004 Zero Insertion Force Sorting Fixture, 4-Terminal (requires 4 cables).	32004
Model 2005 Tweezers, 4-Terminal (for chip capacitors).	32005
BNC to KELVIN KLIPS® cable assembly (comes with all Model 2100's and 2110's).	47454

1.4.2 Options (field installable)

	ESI Part No.
General Purpose Interface Bus (IEEE-488)	46725
RS232 Interface (2100 only)	TBA
Handler Interface Options*	
1. For interfacing to the Engineered Automation Autosort handler	47895
2. For interfacing to the Daymarc Type 147 and 149 handlers.	47896
3. For interfacing to Browne handlers	47897

*Consult factory for interface to specific handlers