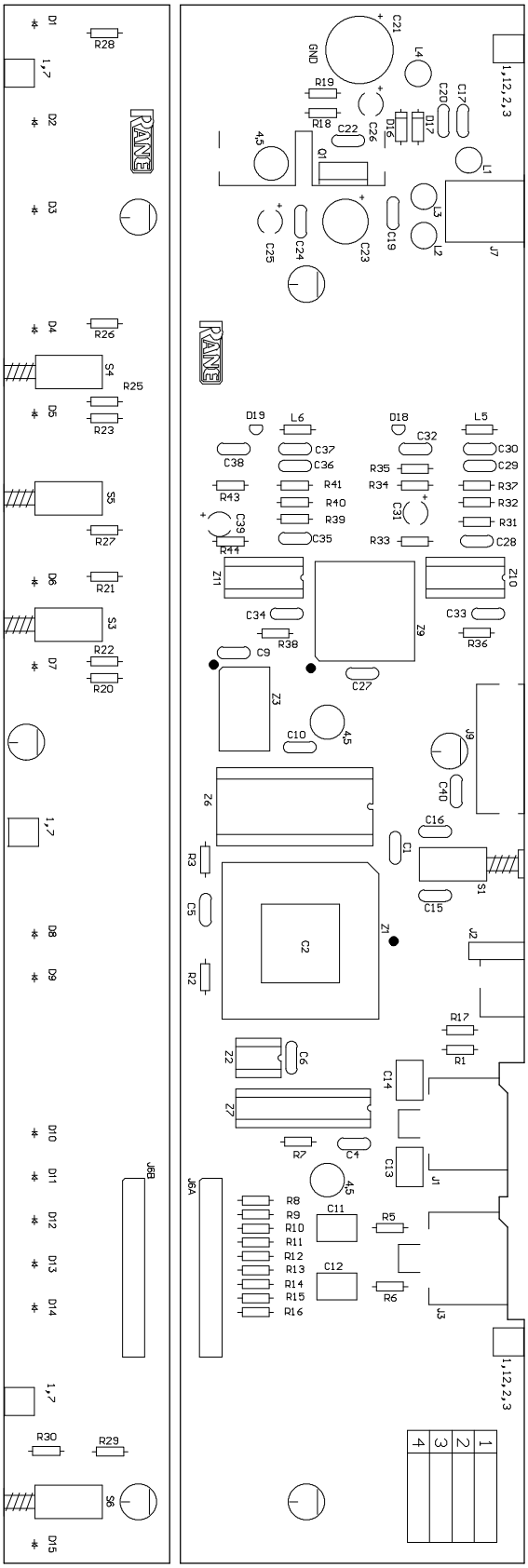

2-Sep-1997 R. HARRISON 522-253 RC 24A ASSY: REV A ACTION: NEW PRODUCT
H:\RC24A\161-075.PCB

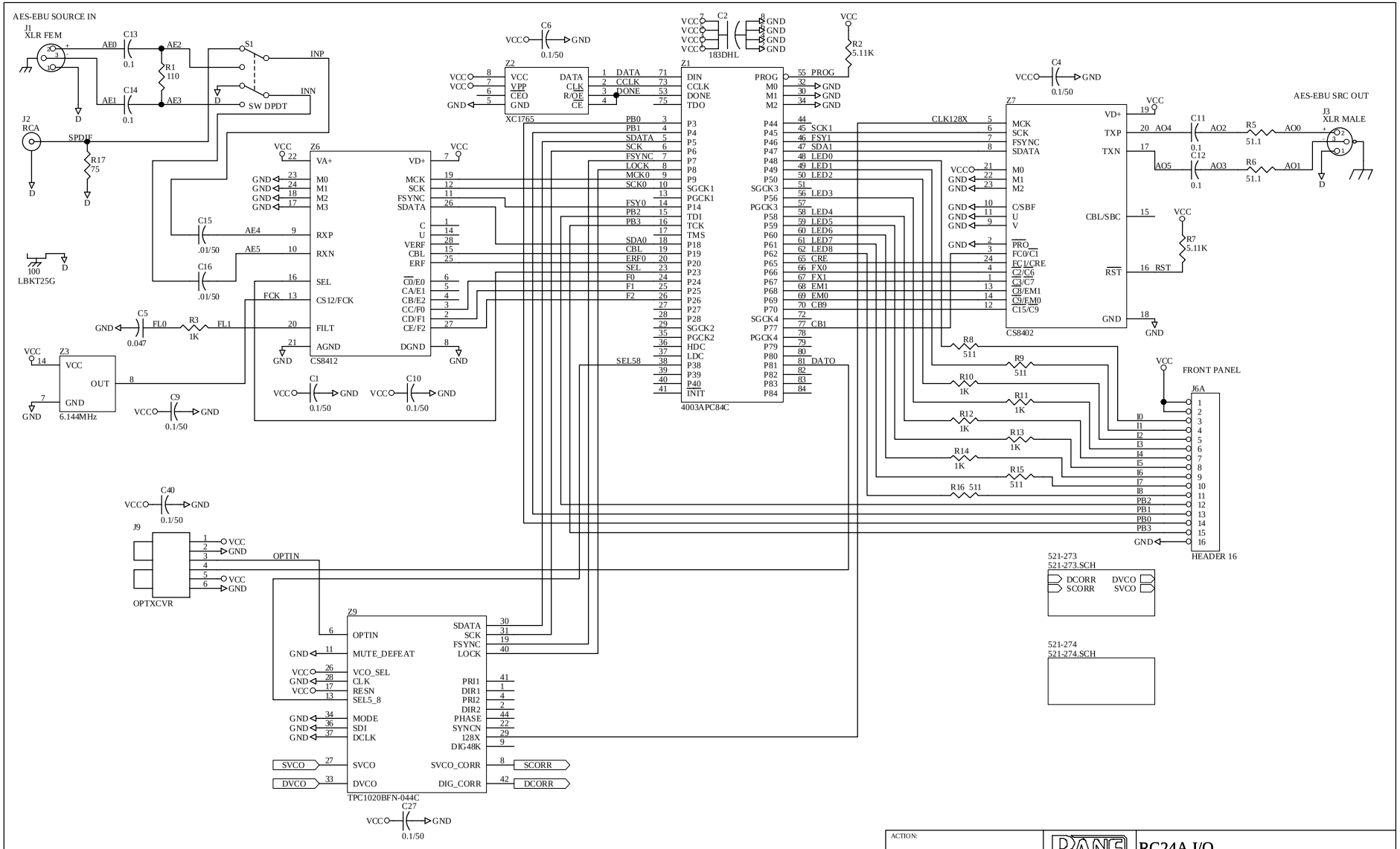
AES-EBU SOURCE IN
J1
XLR FEM
C13
0.1
C14
0.1
R1
110
S1
SW DPDT
INP
INN
J2
RCA
SPDIF
R17
75
LBKT25G
100
Z6
CS8412
VA+
VD+
M0
M1
M2
M3
RXP
RXN
SEL
CS12/FCK
FILT
AGND
DGND
MCK
SCK
FSYNC
SDATA
C
U
VERF
CBL
ERF
C0/E0
CA/E1
CB/E2
CC/F0
CD/F1
CE/F2
C15
.01/50
C16
.01/50
C5
0.047
R3
1K
Z3
6.144MHz
OUT
C1
0.1/50
C10
0.1/50
C9
0.1/50
C6
0.1/50
Z2
XC1765
DATA
CCLK
VPP
CEO
R/OE
CE
DONE
C2
183DHL
Z1
4003APC84C
DIN
CCLK
DONE
TDO
PROG
M0
M1
M2
SGCK1
PGCK1
TDI
TCK
TMS
SGCK2
PGCK2
HDC
LDC
INIT
SGCK3
PGCK3
SGCK4
PGCK4
DATO
R2
5.11K
C4
0.1/50
Z7
CS8402
MCK
SCK
FSYNC
SDATA
TXP
TXN
CBL/SBC
RST
C/SBF
U
V
PRO
FC0/C1
FC1/CRE
C2/C6
C3/C7
C8/EM1
C9/EM0
C15/C9
C11
0.1
C12
0.1
R5
51.1
R6
51.1
AES-EBU SRC OUT
J3
XLR MALE
R7
5.11K
R8
511
R9
511
R10
1K
R11
1K
R12
1K
R13
1K
R14
1K
R15
511
R16 511
FRONT PANEL
J6A
HEADER 16
C40
0.1/50
J9
OPTXCVR
OPTIN
Z9
TPC1020BFN-044C
OPTIN
MUTE_DEFEAT
VCO_SEL
CLK
RESN
SEL5_8
MODE
SDI
DCLK
SVCO
DVCO
SDATA
SCK
FSYNC
LOCK
PRI1
DIR1
PRI2
DIR2
PHASE
SYNCN
128X
DIG48K
SVCO_CORR
DIG_CORR
SCORR
DCORR
C27
0.1/50
521-273
521-273.SCH
DCORR
SCORR
DVCO
SVCO
521-274
521-274.SCH
ACTION:
DRAWN: CHUCK
CHECKED: BOB
RANE
10802 47th Avenue West
Mukilteo WA 98275-5098
RC24A I/O
SHEET: 1 of 3
521-272
C
H:\RC24A\521-272.PRJ
2-Sep-1997

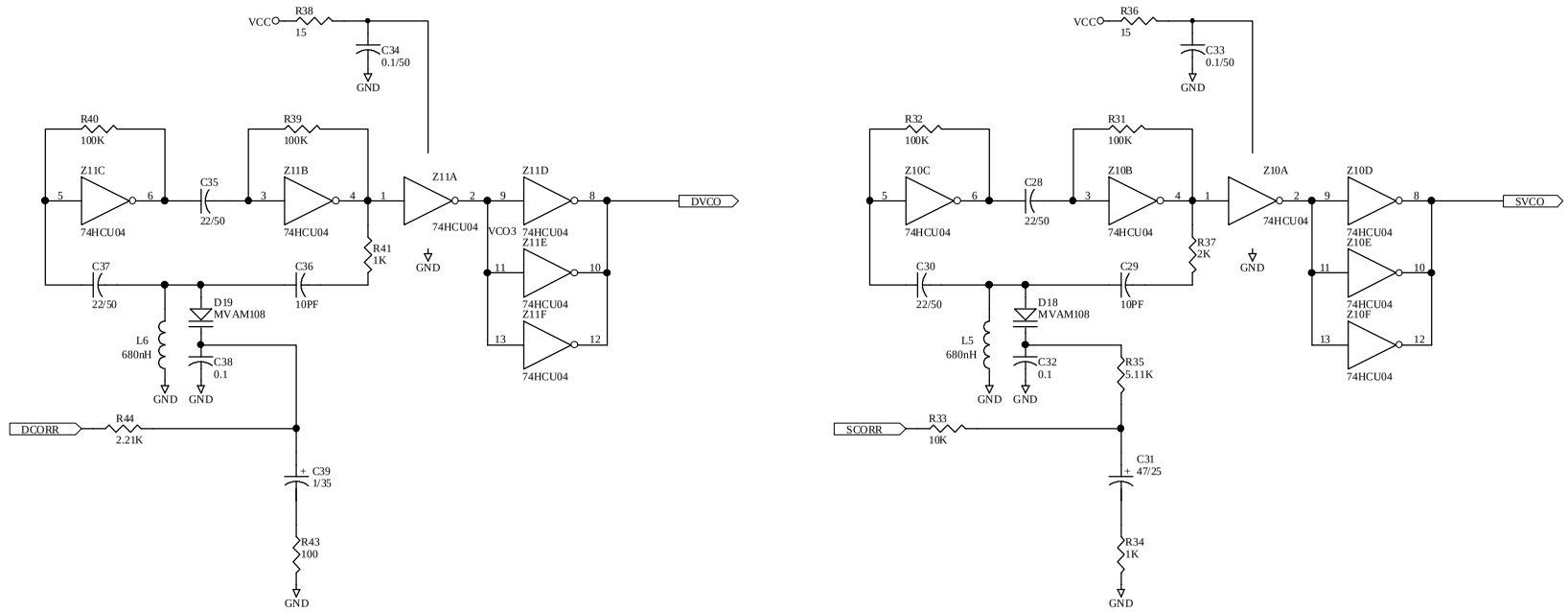

ACTION:		RANE 10802 47th Avenue West Mukilteo WA 98275-5098	RC24A VCO
DRAWN: CHUCK	CHECKED: BOB	SHEET: 2 of 3	521-273 B

H:\RC24A\521-273.SCH 2-Sep-1997

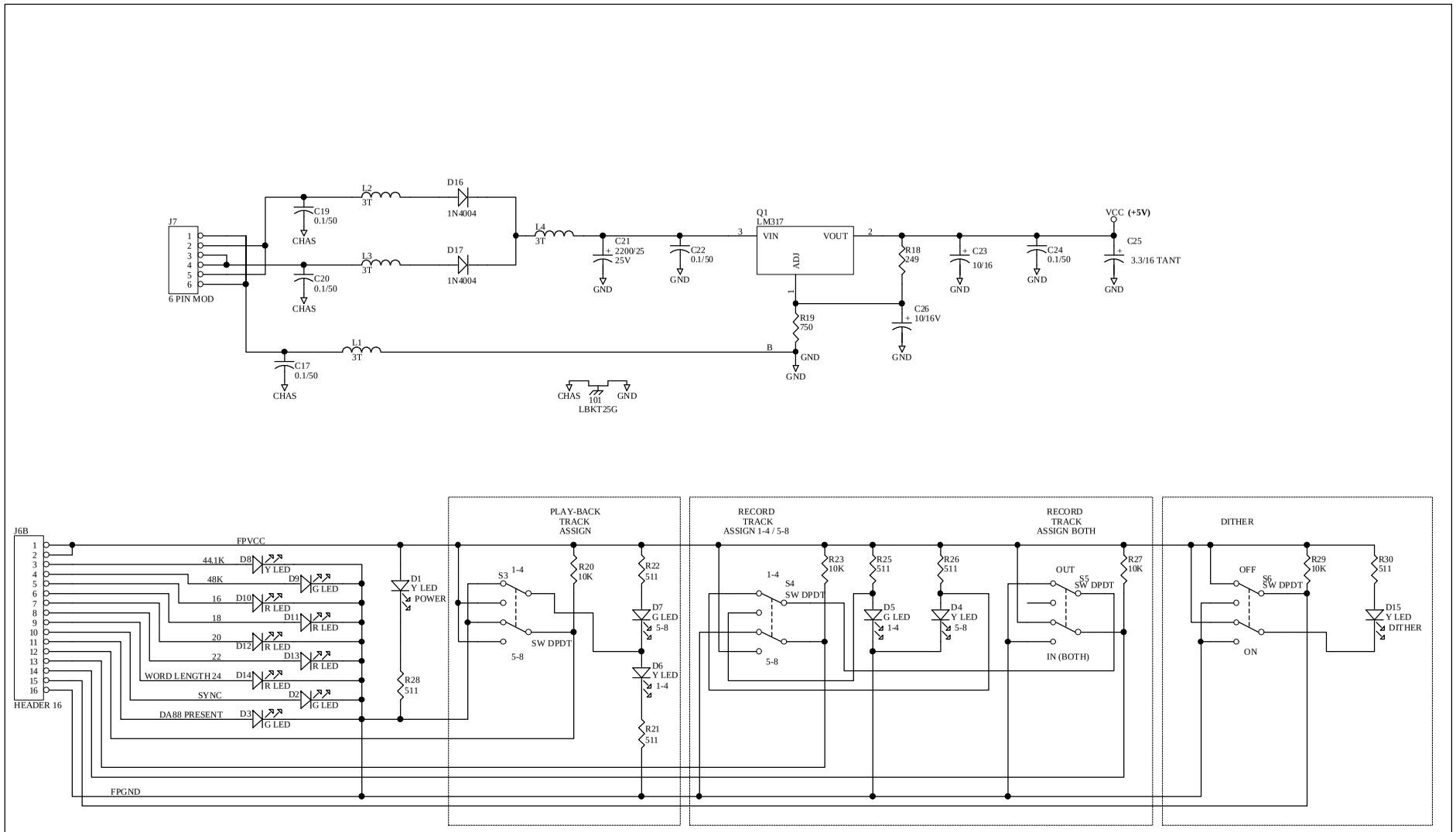

ACTION:		RANE 10802 47th Avenue West Mukilteo WA 98275-5098	RC24A FRONT/POWER
DRAWN: CHUCK	CHECKED: BOB		SHEET: 3 of 3 — 521-274 — B

H:\RC24A\521-274.SCH 2-Sep-1997