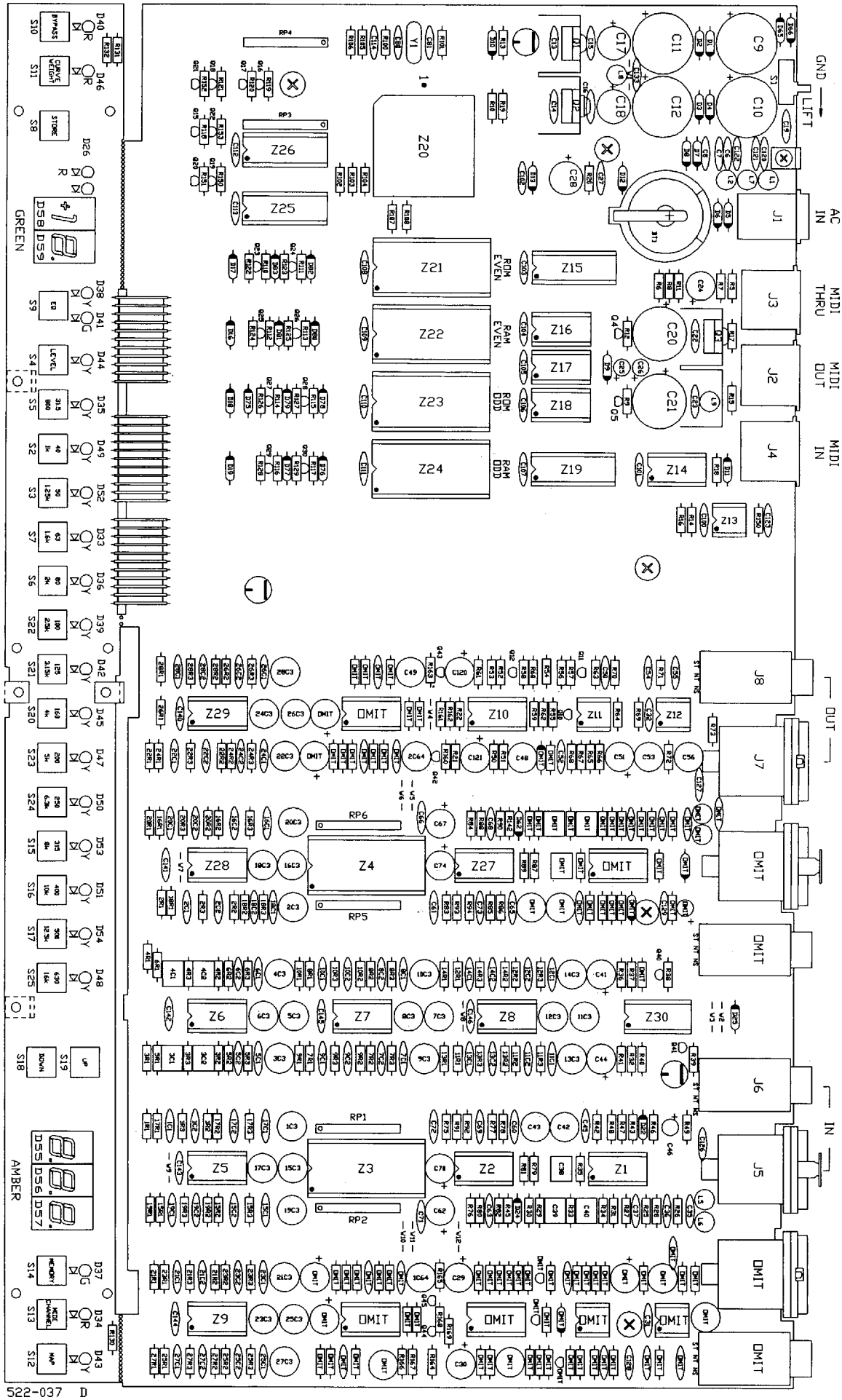
GND
LIFT
AC IN
MIDI THRU
MIDI OUT
MIDI IN
OUT
IN
GREEN
AMBER
ROM EVEN
RAM EVEN
ROM ODD
RAM ODD
OMIT
BYPASS
CURVE WEIGHT
STORE
LEVEL
MEMORY
MIDI CHANNEL
MAP
UP
DOWN

522-037 D

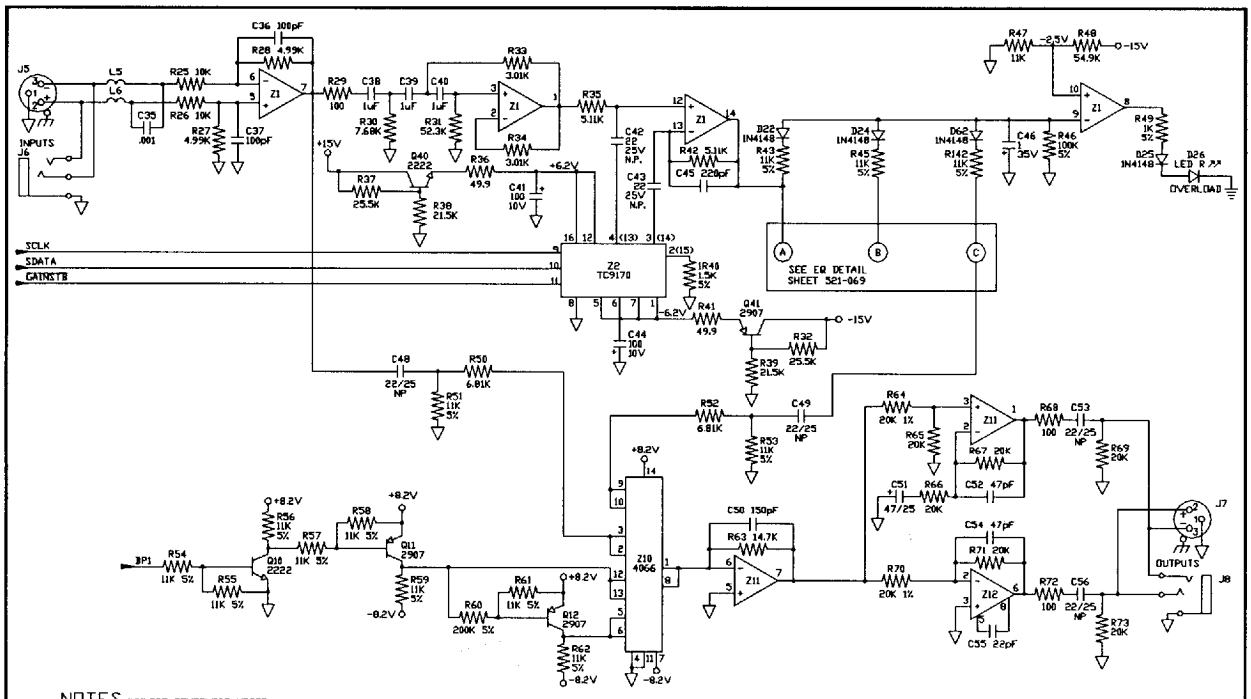


NOTES (UNLESS OTHERWISE NOTED)

1. ALL RES 1/4W, 1% METAL FILM
2. POWER SUPPLY CONNECTIONS:

| | POS SUP | NEG SUP |
|---|---|---|
| SING | 7 | 4 |
| DUAL | 8 | 4 |
| QUAD | 4 | 11 |

3. ALL SWs SHOWN IN THEIR "OUT" OR "OFF" POSITION
4. ALL CMOS ICS ARE DECOUPLED BY .01 CAPS.
5. IC'S: 4741 = Z1, Z2, Z4, Z5, Z6, Z7, Z8, Z9
   4570 = Z11
   5534 = Z12

| REVISIONS | REV. B | ACTION REPLACED ZENER SUPPLIES | DATE 30JAN91 | APPROVED AVC |
|---|---|---|---|---|
| DRAWN S. TURNIDGE | DATE 31AUG89 | CHECKED A CLAXTON DATE 8SEP89 | SHEET 1 OF 5 | DO NOT SCALE DRAWING |

RANE
Corp. 10802 47th Avenue West, Everett WA 98204-3400 (206) 355-6000

TITLE MPE 28 I/O

DRW. NO. 521-068 REV. B

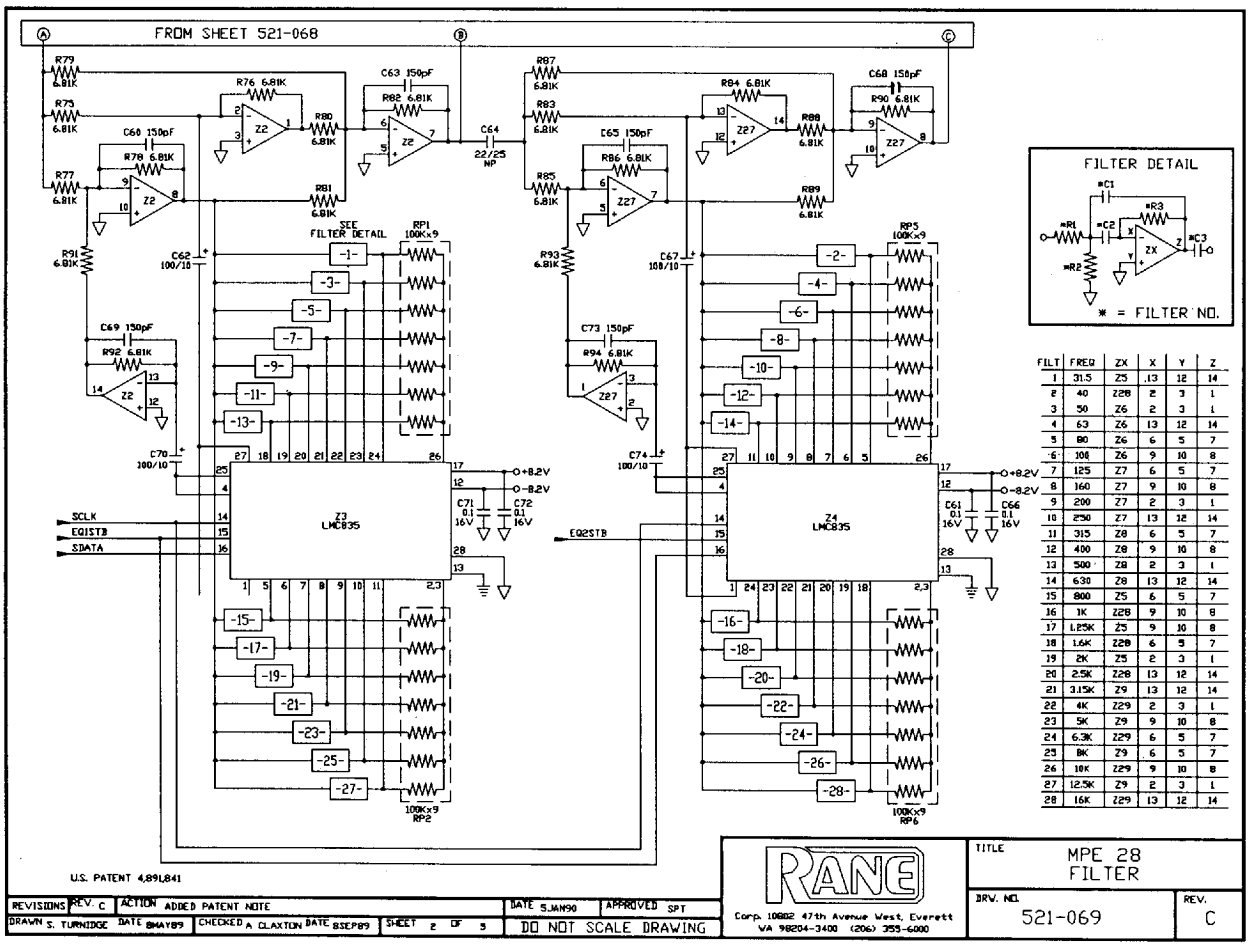


| FILT | FREQ | ZX | X | Y | Z |
|---|---|---|---|---|---|
| 1 | 31.5 | Z5 | .13 | 12 | 14 |
| 2 | 40 | Z28 | 2 | 3 | 1 |
| 3 | 50 | Z6 | 2 | 3 | 1 |
| 4 | 63 | Z6 | 13 | 12 | 14 |
| 5 | 80 | Z6 | 6 | 5 | 7 |
| 6 | 100 | Z6 | 9 | 10 | 8 |
| 7 | 125 | Z7 | 6 | 5 | 7 |
| 8 | 160 | Z7 | 9 | 10 | 8 |
| 9 | 200 | Z7 | 2 | 3 | 1 |
| 10 | 250 | Z7 | 13 | 12 | 14 |
| 11 | 315 | Z8 | 6 | 5 | 7 |
| 12 | 400 | Z8 | 9 | 10 | 8 |
| 13 | 500 | Z8 | 2 | 3 | 1 |
| 14 | 630 | Z8 | 13 | 12 | 14 |
| 15 | 800 | Z5 | 6 | 5 | 7 |
| 16 | 1K | Z28 | 9 | 10 | 8 |
| 17 | 1.25K | Z5 | 9 | 10 | 8 |
| 18 | 1.6K | Z28 | 6 | 5 | 7 |
| 19 | 2K | Z5 | 2 | 3 | 1 |
| 20 | 2.5K | Z28 | 13 | 12 | 14 |
| 21 | 3.15K | Z9 | 13 | 12 | 14 |
| 22 | 4K | Z29 | 2 | 3 | 1 |
| 23 | 5K | Z9 | 9 | 10 | 8 |
| 24 | 6.3K | Z29 | 6 | 5 | 7 |
| 25 | 8K | Z9 | 6 | 5 | 7 |
| 26 | 10K | Z29 | 9 | 10 | 8 |
| 27 | 12.5K | Z9 | 2 | 3 | 1 |
| 28 | 16K | Z29 | 13 | 12 | 14 |

U.S. PATENT 4,891,841

| REVISIONS | REV. C | ACTION ADDED PATENT NOTE | DATE 5JAN90 | APPROVED SPT |
|---|---|---|---|---|
| DRAWN S. TURNIDGE | DATE 8MAY89 | CHECKED A CLAXTON DATE 8SEP89 | SHEET 2 OF 5 | DO NOT SCALE DRAWING |

RANE
Corp. 10802 47th Avenue West, Everett WA 98204-3400 (206) 355-6000

TITLE MPE 28 FILTER

DRW. NO. 521-069 REV. C

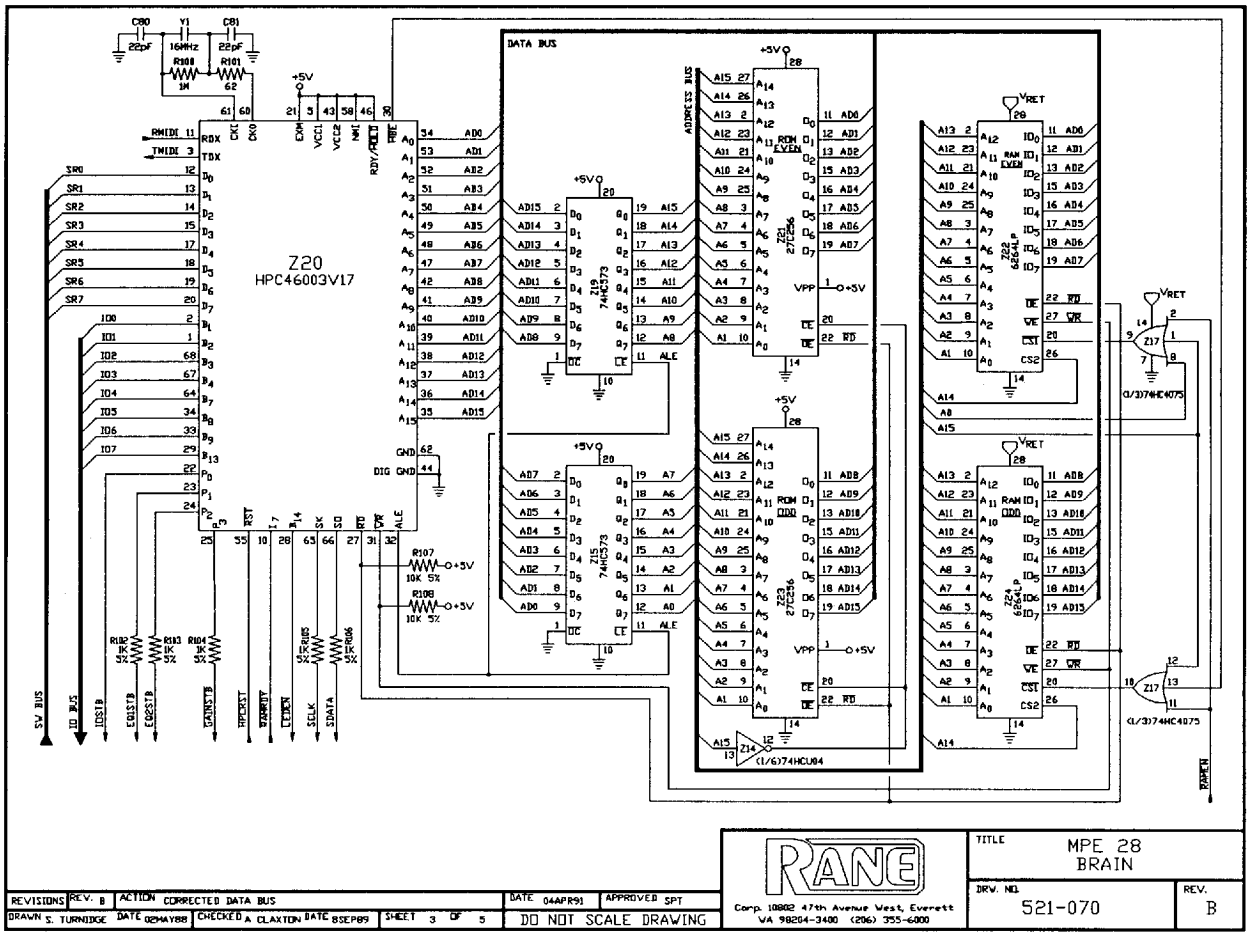
Z20
HPC46003V17
DATA BUS
ADDRESS BUS
ROM EVEN
ROM ODD
RAM EVEN
RAM ODD
Z19 74HC573
Z15 74HC573
Z21 27C256
Z23 27C256
Z22 6264LP
Z24 6264LP
Z17 (1/3)74HC4075
Z14 (1/6)74HCU04
RP3 10Kx9
R107 10K 5%
R108 10K 5%
SV BUS
IO BUS
IOSTB
EDRSTB
EDWSTB
CARSTB
HPCRST
TRANSMIT
LEDEN
SCLK
SDATA
RAMEN
REVISIONS REV. B ACTION CORRECTED DATA BUS
DATE 04APR91 APPROVED SPT
DRAWN S. TURNIDGE DATE 02MAY88 CHECKED A. CLAXTON DATE 8SEP89 SHEET 3 OF 5
DO NOT SCALE DRAWING
RANE
Corp. 10802 47th Avenue West, Everett WA 98204-3400 (206) 355-6000
TITLE MPE 28 BRAIN
DRW. NO. 521-070
REV. B

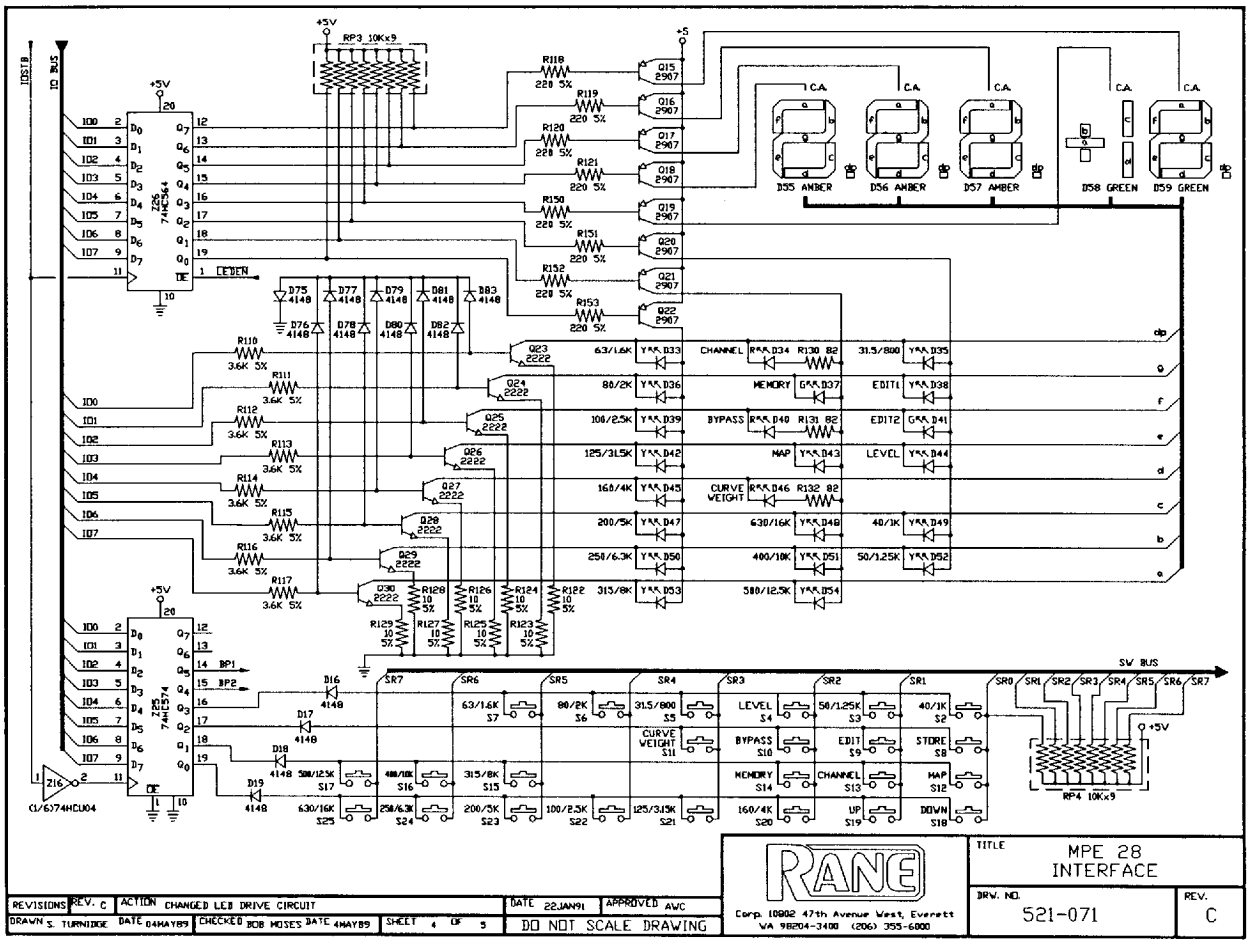
RP3 10Kx9
Z26 74HC564
Z25 74HC574
Z16 (1/6)74HCU04
LEDEN
D55 AMBER
D56 AMBER
D57 AMBER
D58 GREEN
D59 GREEN
63/1.6K
80/2K
100/2.5K
125/3.15K
160/4K
200/5K
250/6.3K
315/8K
400/10K
500/12.5K
630/16K
31.5/800
40/1K
50/1.25K
CHANNEL
MEMORY
BYPASS
MAP
CURVE WEIGHT
EDIT1
EDIT2
LEVEL
STORE
UP
DOWN
SV BUS
RP4 10Kx9
REVISIONS REV. C ACTION CHANGED LED DRIVE CIRCUIT
DATE 22JAN91 APPROVED AWC
DRAWN S. TURNIDGE DATE 04MAY89 CHECKED BOB MOSES DATE 4MAY89 SHEET 4 OF 5
DO NOT SCALE DRAWING
RANE
Corp. 10802 47th Avenue West, Everett WA 98204-3400 (206) 355-6000
TITLE MPE 28 INTERFACE
DRW. NO. 521-071
REV. C

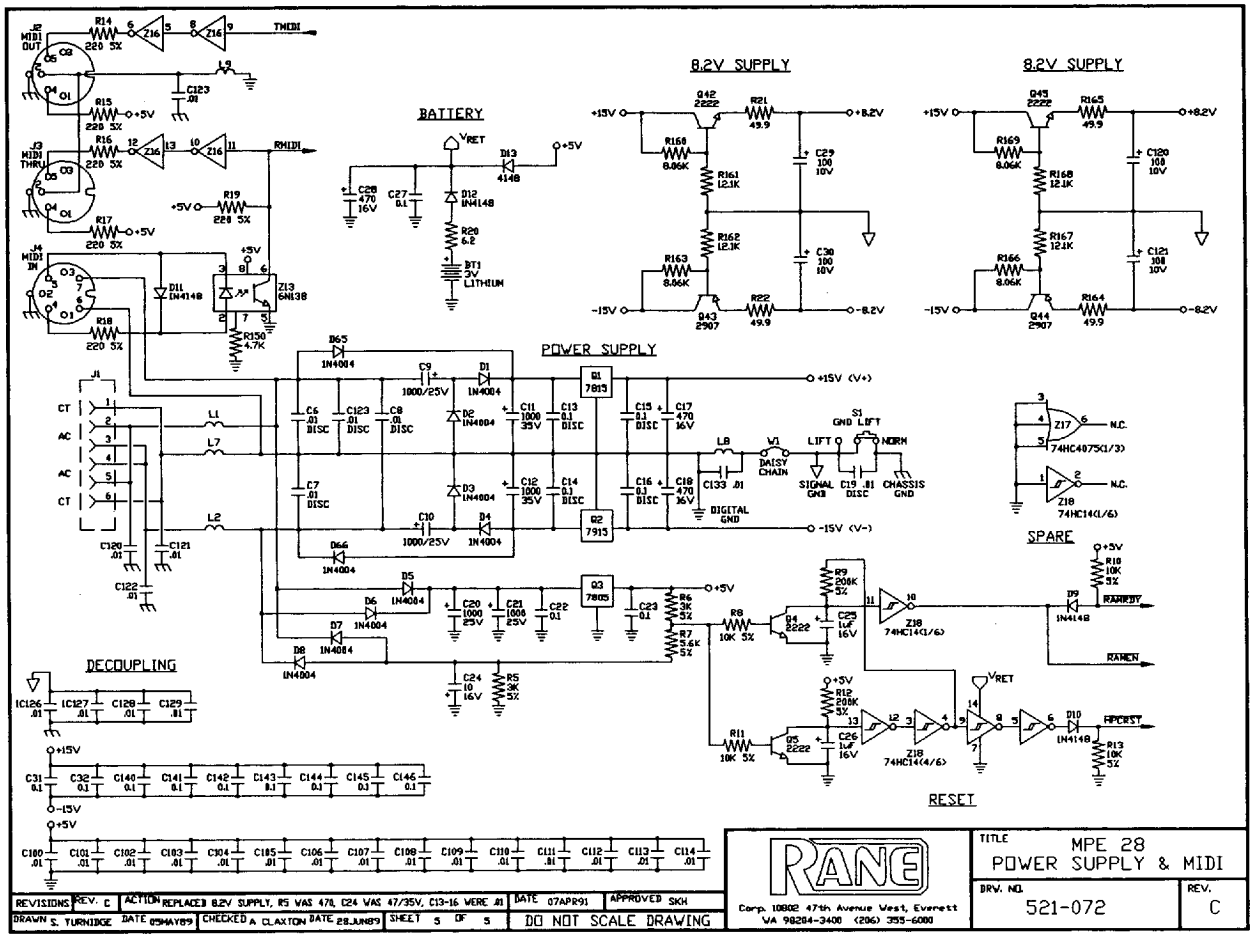
BATTERY
8.2V SUPPLY
8.2V SUPPLY
POWER SUPPLY
SPARE
DECOUPLING
RESET
RANE
Corp. 10802 47th Avenue West, Everett WA 98204-3400 (206) 355-6000
TITLE MPE 28 POWER SUPPLY & MIDI
DRW. NO. 521-072
REV. C
REVISIONS REV. C ACTION REPLACED 8.2V SUPPLY, R5 WAS 470, C24 WAS 47/35V, C13-16 WERE .01 DATE 07APR91 APPROVED SKH
DRAWN S. TURNIDGE DATE 05MAY89 CHECKED A. CLAXTON DATE 28JUN89 SHEET 5 OF 5
DO NOT SCALE DRAWING

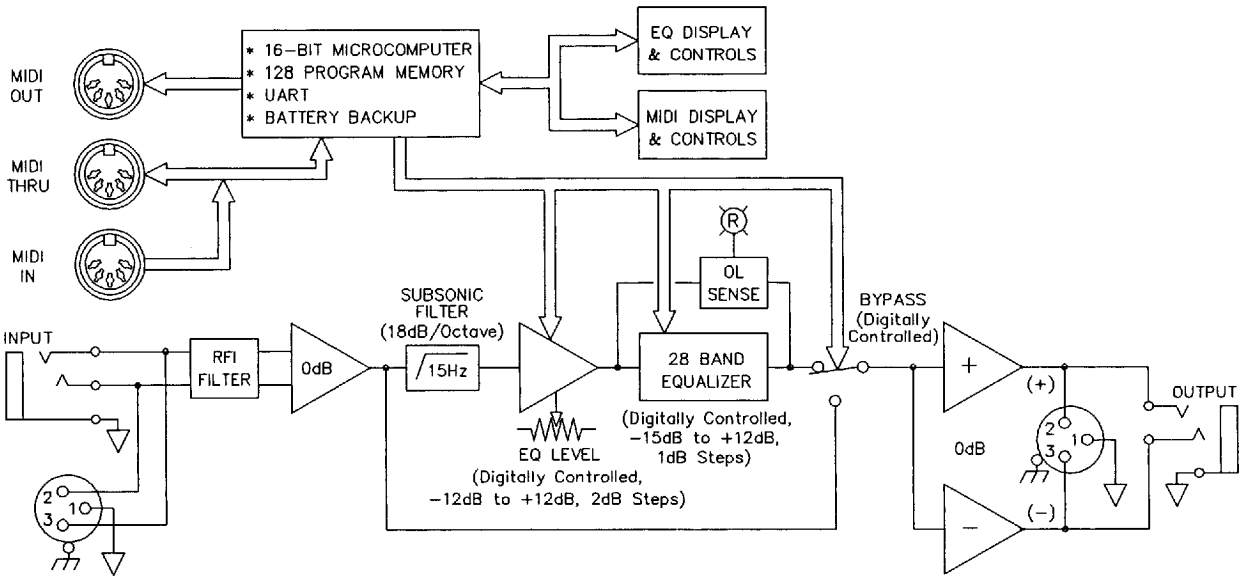
MIDI OUT
MIDI THRU
MIDI IN
* 16-BIT MICROCOMPUTER
* 128 PROGRAM MEMORY
* UART
* BATTERY BACKUP
EQ DISPLAY & CONTROLS
MIDI DISPLAY & CONTROLS
OL SENSE
INPUT
RFI FILTER
0dB
SUBSONIC FILTER (18dB/Octave)
15Hz
EQ LEVEL (Digitally Controlled, −12dB to +12dB, 2dB Steps)
28 BAND EQUALIZER (Digitally Controlled, −15dB to +12dB, 1dB Steps)
BYPASS (Digitally Controlled)
0dB
(+)
(−)
OUTPUT