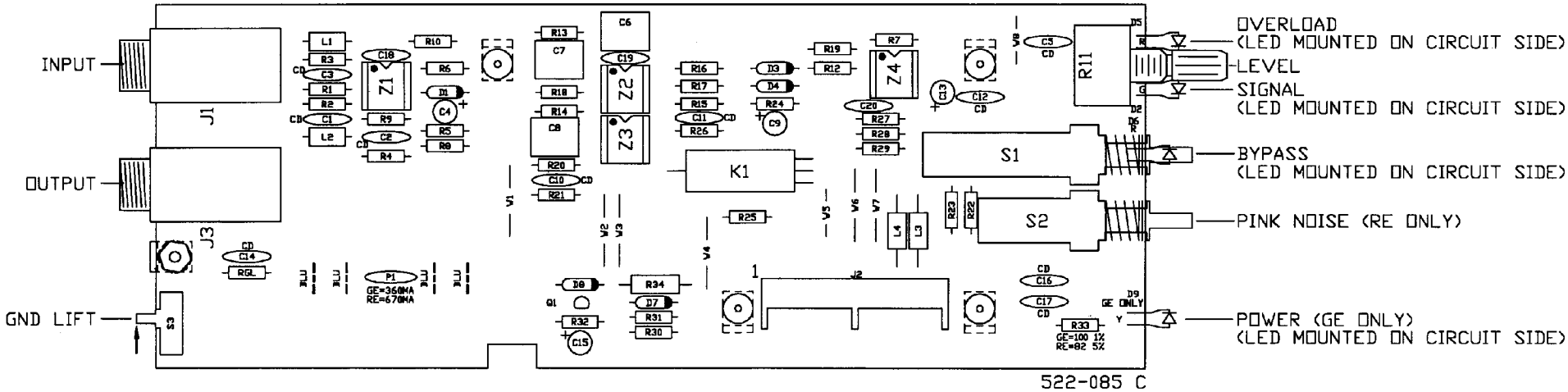
INPUT
OUTPUT
GND LIFT
J1
J3
OVERLOAD
(LED MOUNTED ON CIRCUIT SIDE)
LEVEL
SIGNAL
(LED MOUNTED ON CIRCUIT SIDE)
BYPASS
(LED MOUNTED ON CIRCUIT SIDE)
PINK NOISE (RE ONLY)
POWER (GE ONLY)
(LED MOUNTED ON CIRCUIT SIDE)
522-085 C

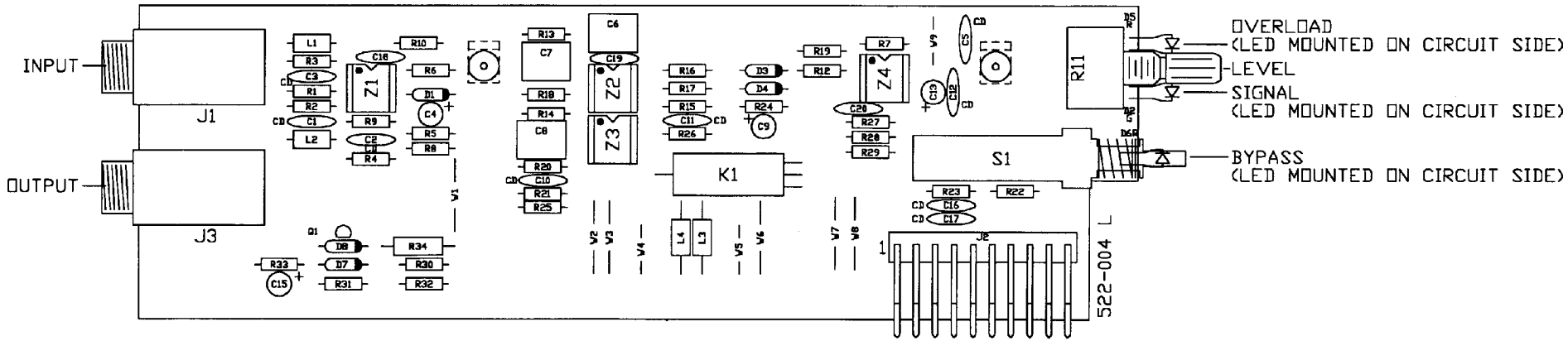
INPUT
OUTPUT
J1
J3
OVERLOAD
(LED MOUNTED ON CIRCUIT SIDE)
LEVEL
SIGNAL
(LED MOUNTED ON CIRCUIT SIDE)
BYPASS
(LED MOUNTED ON CIRCUIT SIDE)
522-004 L

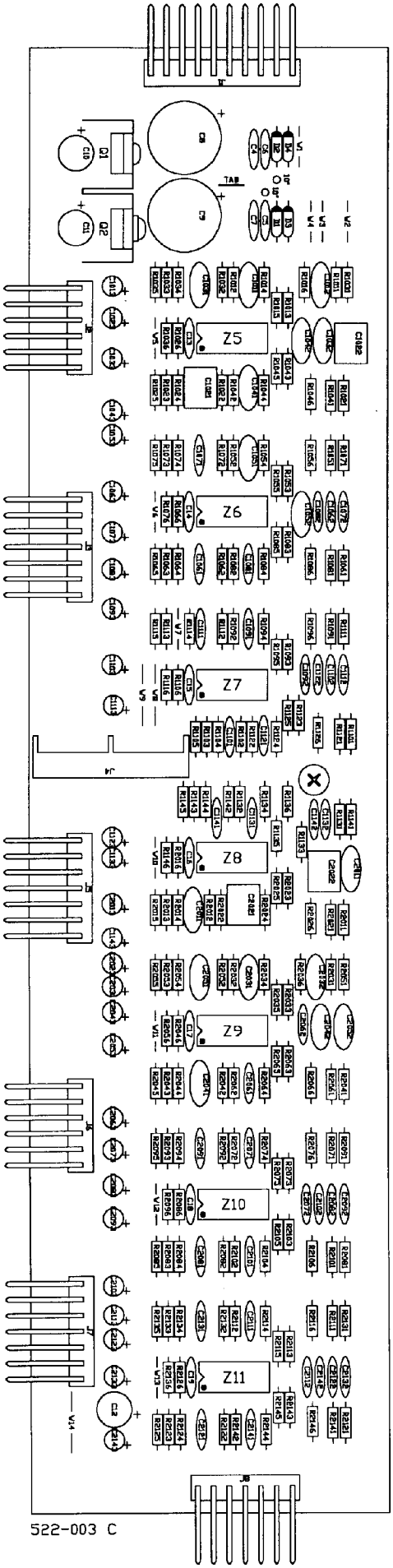

522-003 C

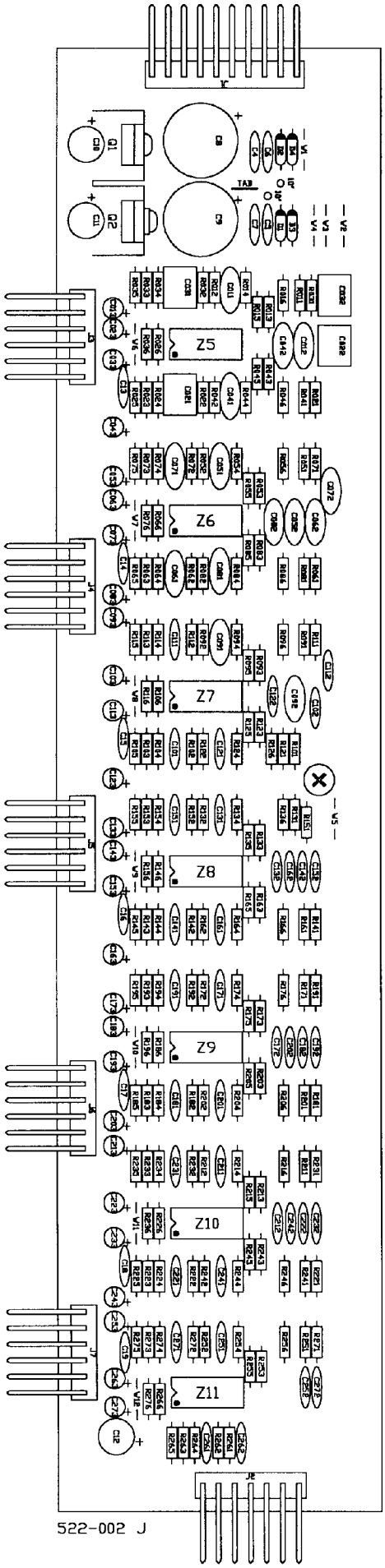

522-002 J

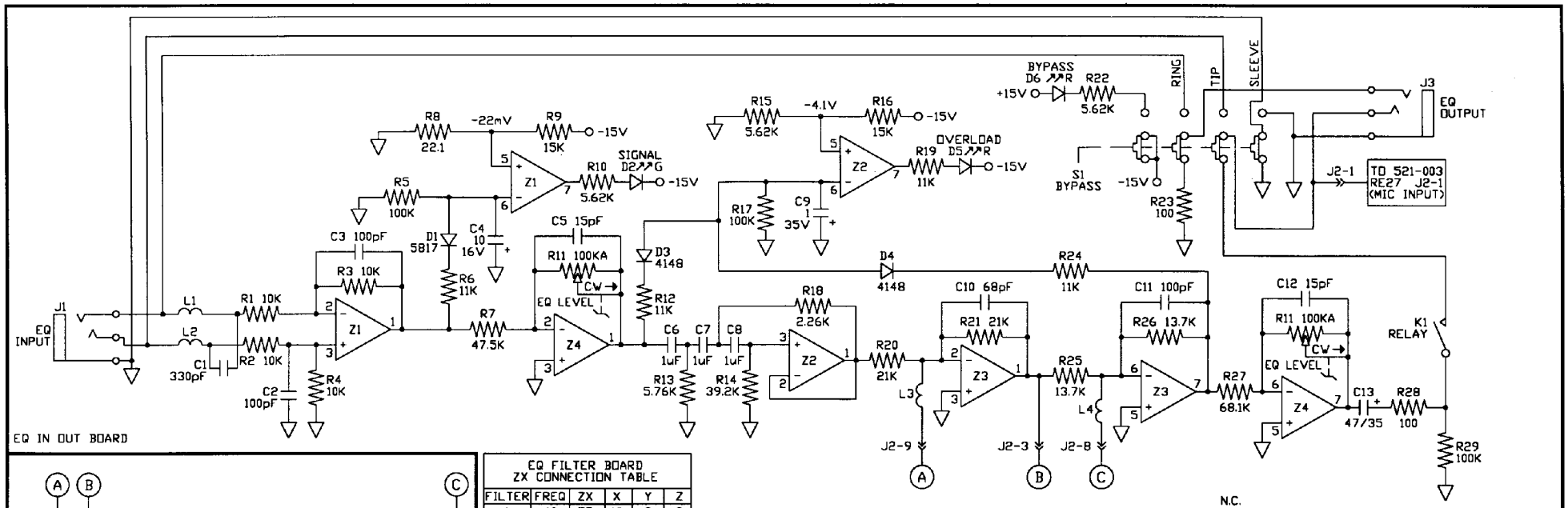

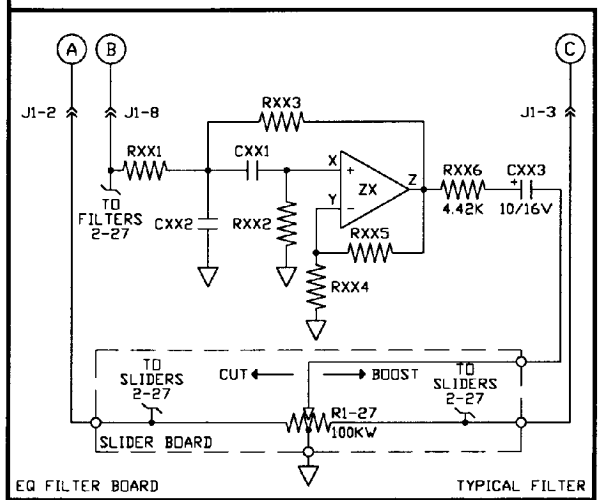

EQ FILTER BOARD ZX CONNECTION TABLE					
FILTER	FREQ	ZX	X	Y	Z
1	40	Z5	10	9	8
2	50	Z5	3	2	1
3	63	Z5	12	13	14
4	80	Z5	5	6	7
5	100	Z6	10	9	8
6	125	Z6	3	2	1
7	160	Z6	12	13	14
8	200	Z6	5	6	7
9	250	Z7	10	9	8
10	315	Z7	3	2	1
11	400	Z7	12	13	14
12	500	Z7	5	6	7
13	630	Z8	10	9	8
14	800	Z8	3	2	1
15	1K	Z8	12	13	14
16	1.25K	Z8	5	6	7
17	1.6K	Z9	10	9	8
18	2K	Z9	3	2	1
19	2.5K	Z9	12	13	14
20	3.15K	Z9	5	6	7
21	4K	Z10	10	9	8
22	5K	Z10	3	2	1
23	6.3K	Z10	12	13	14
24	8K	Z10	5	6	7
25	10K	Z11	10	9	8
26	12.5K	Z11	3	2	1
27	16K	Z11	12	13	14

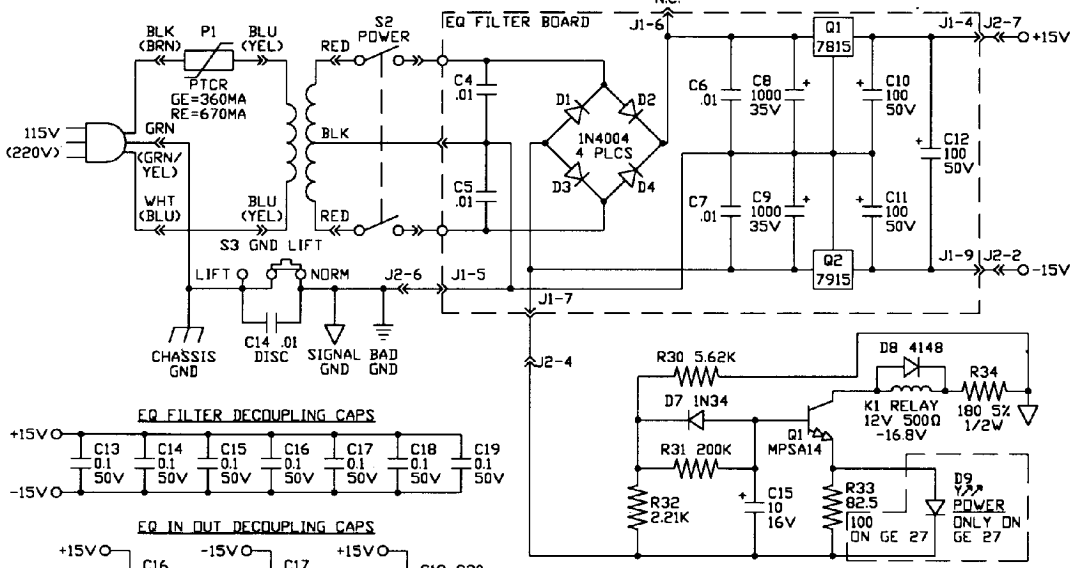

EQ FILTER DECOUPLING CAPS

EQ IN OUT DECOUPLING CAPS

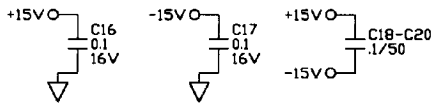

NOTES (UNLESS OTHERWISE NOTED)

1. ALL RESISTORS 1/4W, 1% METAL FILM.
2. ALL CAPS 100V POLY
3. POWER SUPPLY CONNECTIONS:

	POS SUP	NEG SUP
SING	7	4
DUAL	8	4
QUAD	4	11

4. ALL SWs SHOWN IN THEIR "OUT" OR "OFF" POSITION
5. OP AMPS: ALL 4156 OR EQUAL
   EXCEPT: Z1, Z2, Z4=4072, Z3=4570
6. FILTER DESIGNATION SCHEME:
   X XX X
   - DESIGNATOR
   - FILTER NUMBER (01-27)
   - COMPONENT TYPE

   EXAMPLE: R012
   RESISTOR, FILTER 1 (40Hz), NUMBER 2

REVISIONS	REV. U	ACTION ADDED C18-C20,GE PTCR WAS 150mA,CHANGED 5% RESISTORS TO 1%	DATE 05NOV93	APPROVED
DRAWN S. TURNIDGE	DATE 23DEC87	CHECKED A. CLAXTON	DATE 23DEC87	SHEET 1 OF 1

DO NOT SCALE DRAWING

RANE
Corp. 10802 47th Avenue West, Mukilteo
WA 98275-5098 (206) 355-6000

TITLE RE/GE 27 SCHEMATIC

DRW. NO. 521-002

REV. U