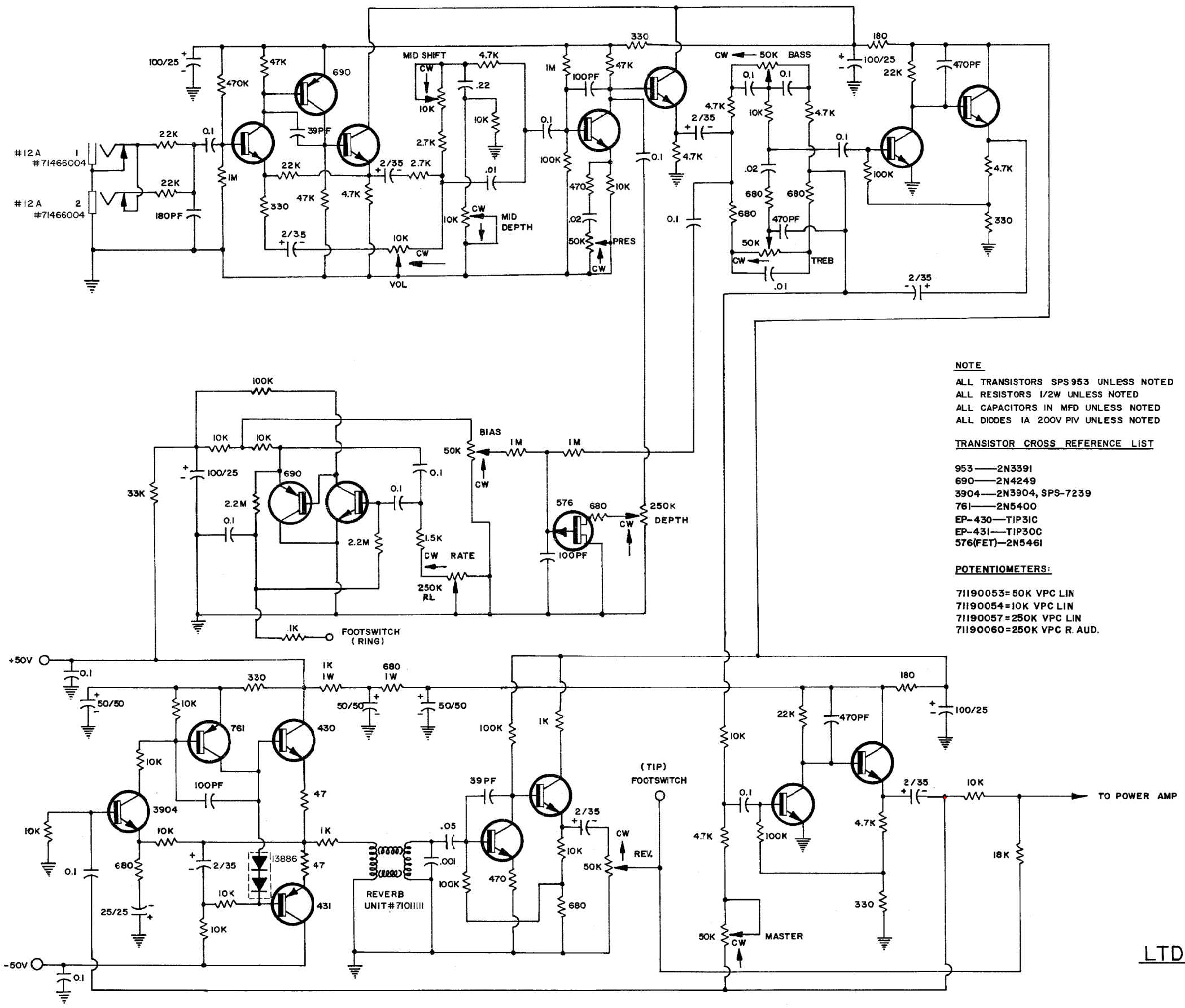

NOTE

ALL TRANSISTORS SPS 953 UNLESS NOTED
ALL RESISTORS 1/2W UNLESS NOTED
ALL CAPACITORS IN MFD UNLESS NOTED
ALL DIODES 1A 200V PIV UNLESS NOTED

TRANSISTOR CROSS REFERENCE LIST

953——2N3391
690——2N4249
3904—2N3904, SPS-7239
761——2N5400
EP-430—TIP31C
EP-431—TIP30C
576(FET)—2N5461

POTENTIOMETERS:

71190053=50K VPC LIN
71190054=10K VPC LIN
71190057=250K VPC LIN
71190060=250K VPC R. AUD.

LTD/SESSION® 400 PREAMP

P/N 81505165

PEAVEY® ELECTRONICS CORP. MERIDIAN, MS	
DRAWN BY: RMH	DATE 10-24-74
CHECKED BY: J.C.L.	
APPROVED BY: H.D.P.	

COPYRIGHT 1974 PEAVEY ELECTRONICS CORP. PRINTED IN U.S.A.

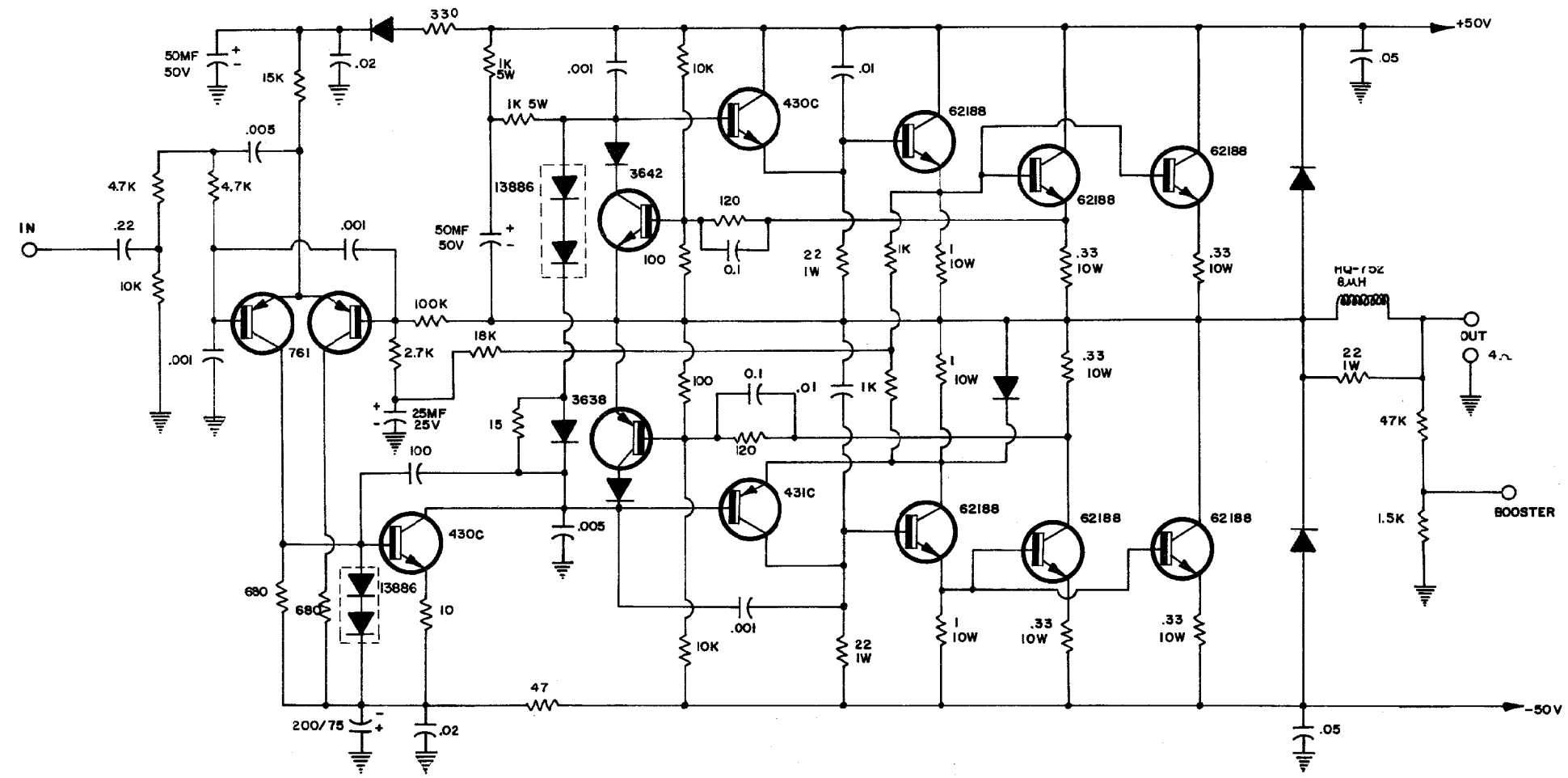

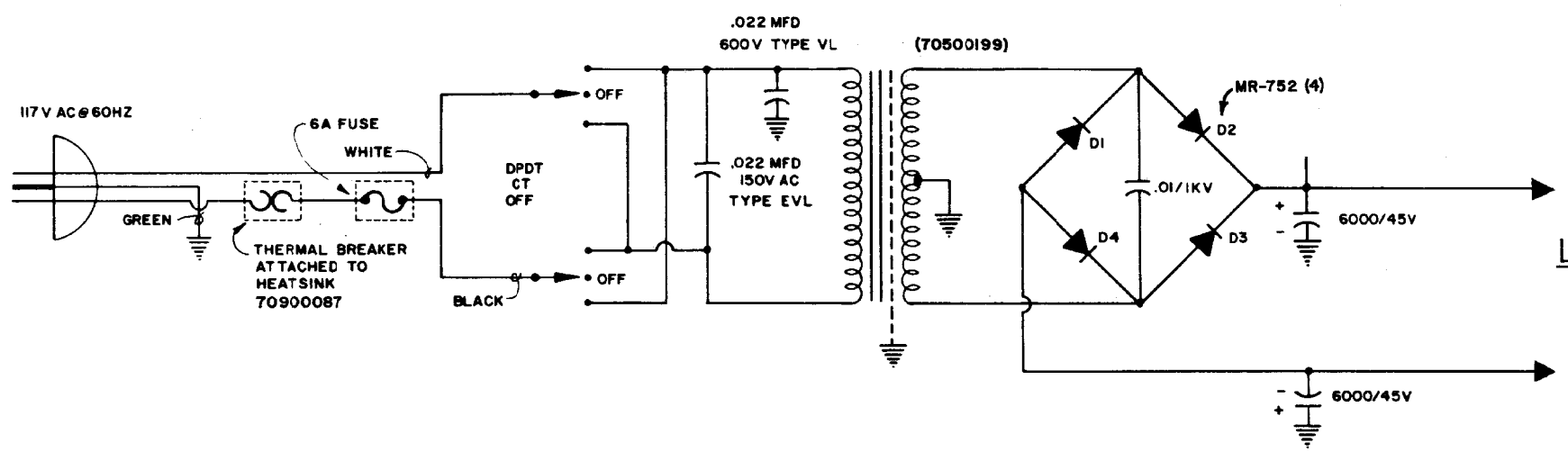

TRANSISTOR CROSS REFERENCE LIST

761——2N5400
3642——2N3642
3638——2N3638
EP-430——TIP 31C
EP-431——TIP 30C
62188——2N3773
13886——MZ2361

LTD/SESSION®400 POWER AMP

(200 WATTS RMS)

PEAVEY® ELECTRONICS CORP.
MERIDIAN, MS

DRAWN BY: RMH DATE 10-24-74
CHECKED BY: JCJ
APPROVED BY: HDP

COPYRIGHT 1974 PEAVEY ELECTRONICS CORP. PRINTED IN U.S.A.