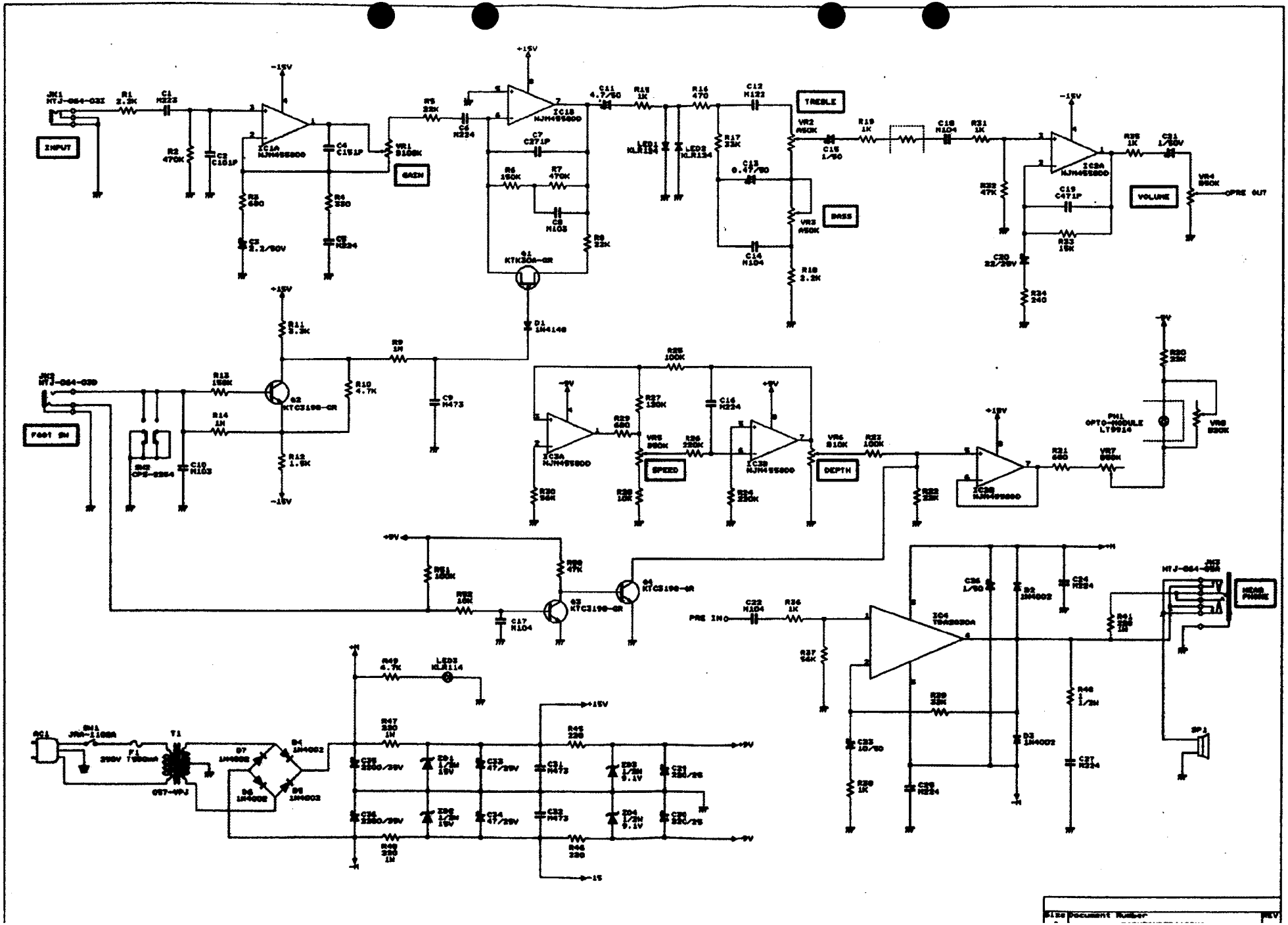
INPUT
GAIN
TREBLE
BASS
VOLUME
PRE OUT
FOOT SW
SPEED
DEPTH
PRE IN
HEAD PHONE
SPK
IC1A NJM4558D
IC1B NJM4558D
IC2A NJM4558D
IC2B NJM4558D
IC3A NJM4558D
IC3B NJM4558D
IC4 TDA2030A
Q1 KTK30A-GR
Q2 KTC3198-GR
Q3 KTC3198-GR
Q4 KTC3198-GR
D1 1N4148
D2 1N4002
D3 1N4002
D4 1N4002
D5 1N4002
D6 1N4002
D7 1N4002
LED1 HLR134
LED2 HLR134
LED3 HLR114
PH1 OPTO-MODULE LTP914
T1
F1 T800mA
SW1 JRA-1108A
SW2 CPS-2254
+15V
-15V
+9V
-9V