VOX

NO. V-1-1

MODEL AC-4 AMPLIFIER
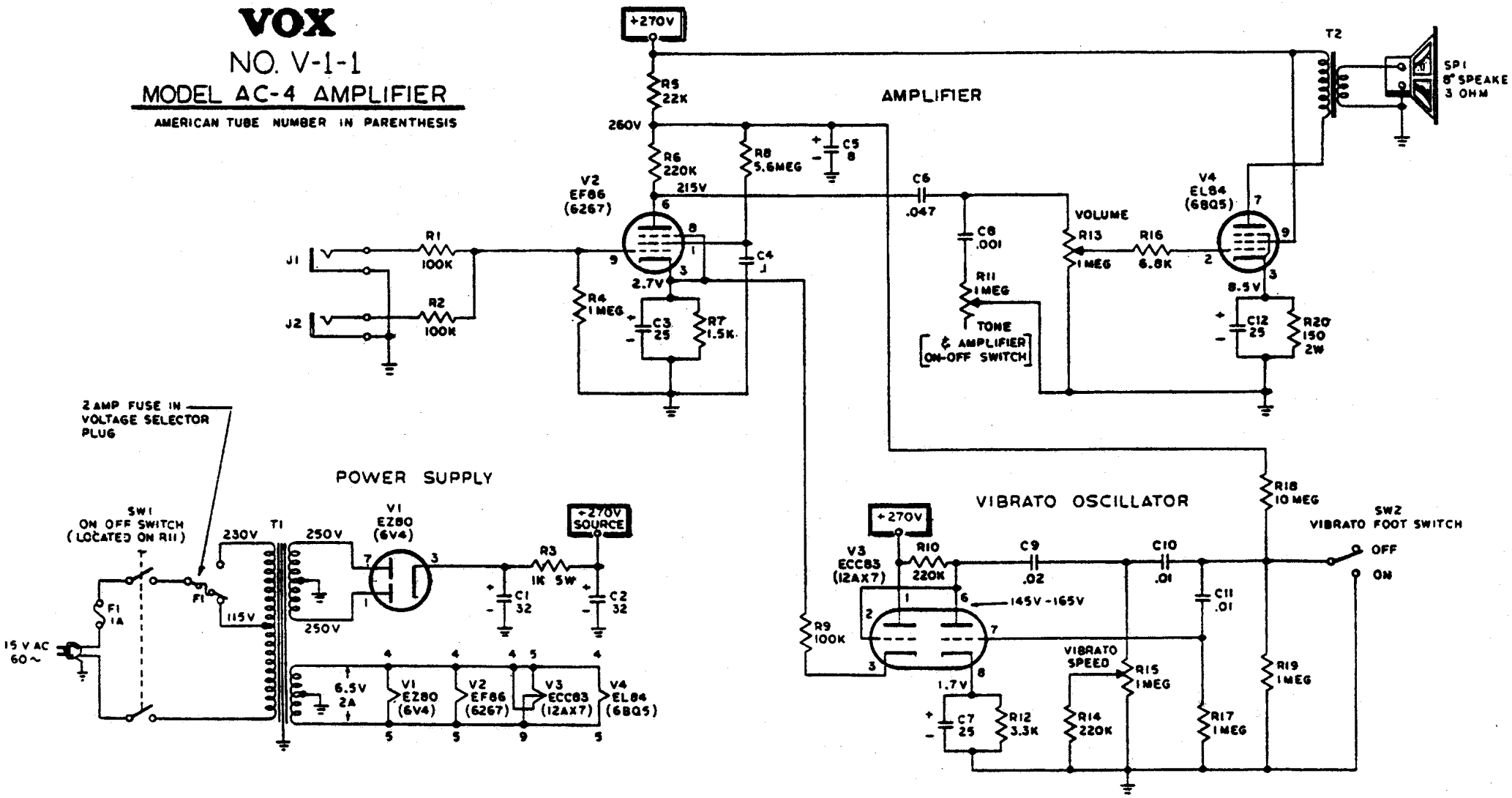
AMERICAN TUBE NUMBER IN PARENTHESIS