VOX AC-30
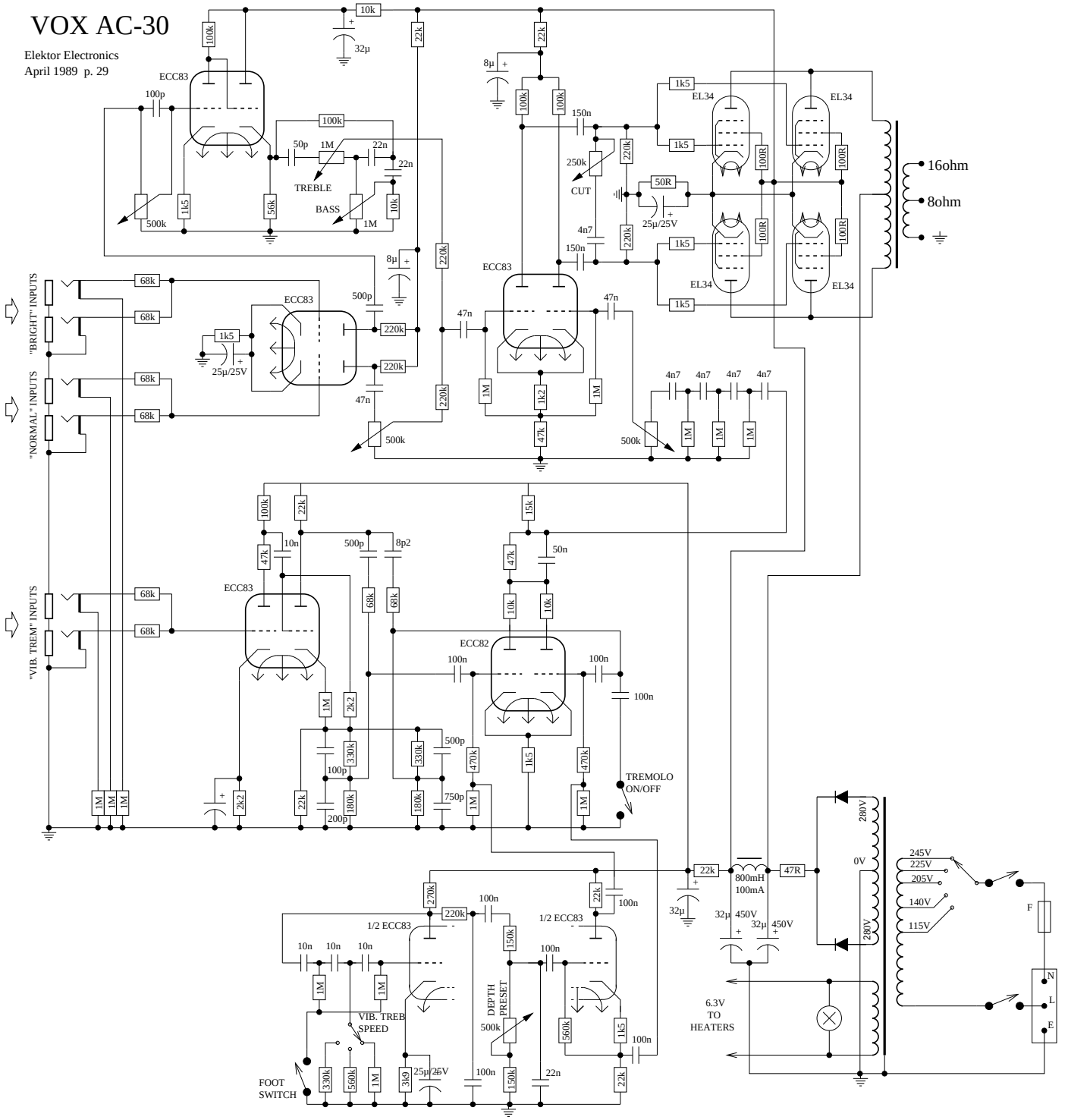
Elektor Electronics
April 1989 p. 29