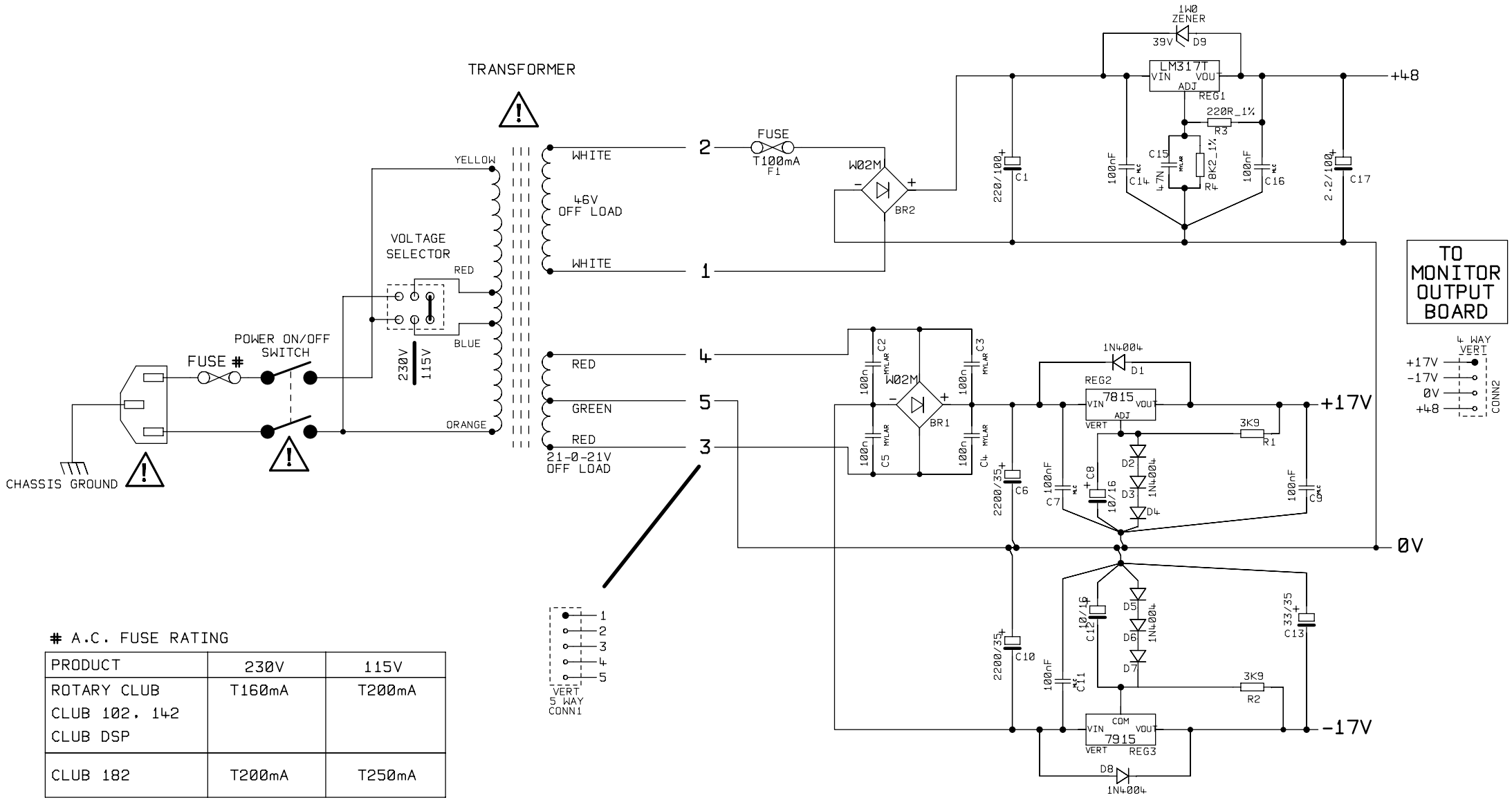

A.C. FUSE RATING

PRODUCT	230V	115V
ROTARY CLUB CLUB 102, 142 CLUB DSP	T160mA	T200mA
CLUB 182	T200mA	T250mA

NOTE: ALL FUSE TYPES ARE 20x5mm 250V

WARNING ⚠ INDICATES SAFTEY CRITICAL COMPONENTS.
REPLACE ONLY WITH STUDIOMASTER RECOMMENDED PARTS.

STUDIOMASTER DIAMOND LTD

PRODUCT	MODEL
LOGIC 12	ALL
CLUB2000	ALL
CLUBDSP	ALL

TITLE	PSU BOARD CIRCUIT		
PART 1 OF 1			
DRN BY	P.A.	DATE	28-04-98

FILE NAME R7C6-1.DGM
ISSUE No 9607049-1
REV 2