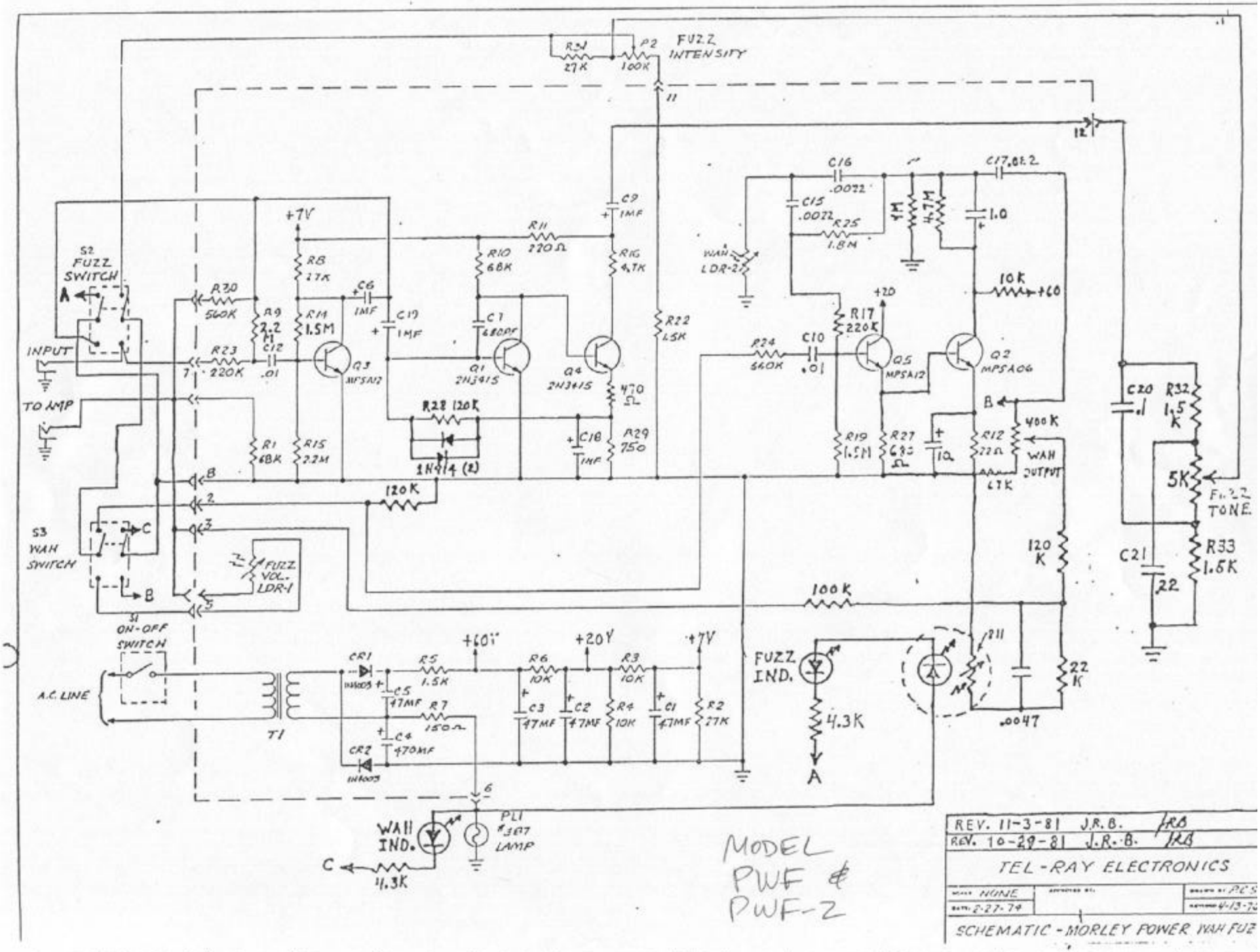
FUZZ INTENSITY
P2 100K
R34 27K
S2 FUZZ SWITCH
INPUT
TO AMP
R30 560K
R23 220K
R9 2.2
C12 .01
R8 27K
R14 1.5M
Q3 MPSA12
C6 1MF
C19 1MF
R1 68K
R15 2.2M
R28 120K
1N914 (2)
R10 68K
C7 680PF
Q1 2N3415
R11 220Ω
Q4 2N3415
C9 1MF
R16 4.7K
470 Ω
C18 1MF
R29 750
R22 1.5K
120K
S3 WAH SWITCH
FUZZ VOL. LDR-1
S1 ON-OFF SWITCH
A.C. LINE
T1
CR1 1N4003
CR2 1N4003
C5 47MF
R5 1.5K
R7 150Ω
C4 470MF
+60V
+20V
+7V
R6 10K
R3 10K
C3 47MF
C2 47MF
R4 10K
C1 47MF
R2 27K
WAH IND.
PL1 #327 LAMP
4.3K
FUZZ IND.
4.3K
C16 .0022
C15 .0022
R25 1.8M
WAH LDR-2
C17 .0022
1.0
10K
+60
R17 220K
R24 560K
C10 .01
Q5 MPSA12
Q2 MPSA06
R19 1.5M
R27 680Ω
10
R12 22Ω
400K
WAH OUTPUT
47K
100K
120 K
22 K
.0047
C20 .1
R32 1.5 K
5K
FUZZ TONE
C21 22
R33 1.6K
MODEL PWF & PWF-2
REV. 11-3-81 J.R.B.
REV. 10-29-81 J.R.B.
TEL-RAY ELECTRONICS
SCHEMATIC - MORLEY POWER WAH FUZ