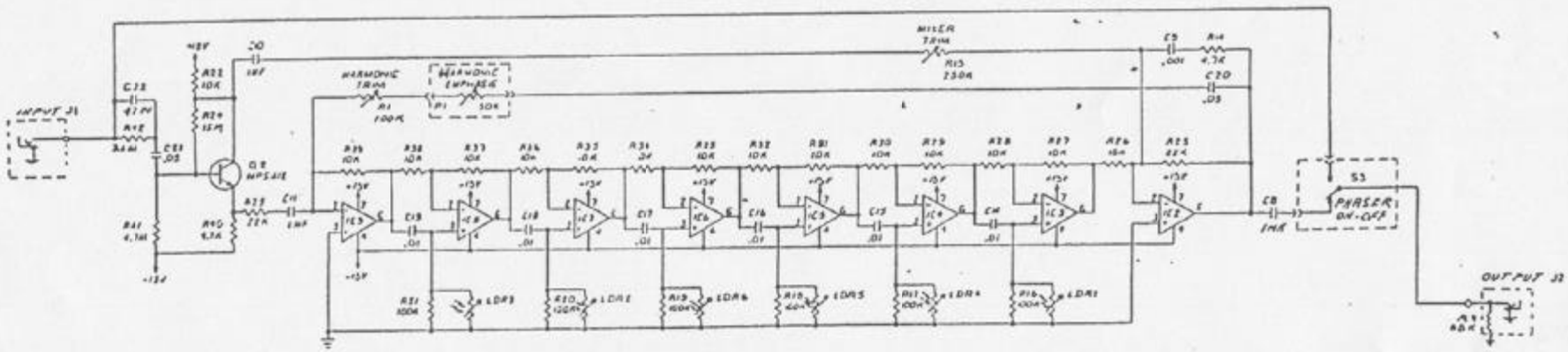

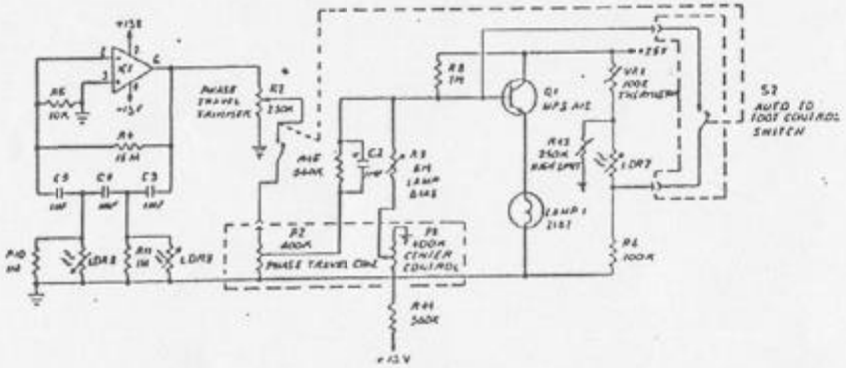

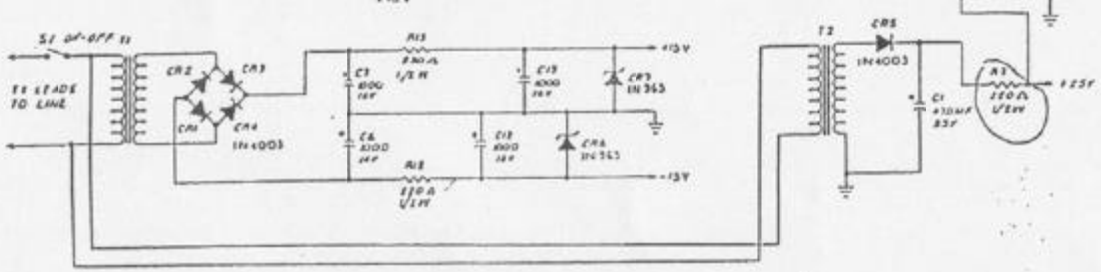

NOTES:

1. ALL VALUES OF RESISTANCE ARE IN OHMS.
2. ALL VALUES OF CAPACITANCE ARE IN MICROFARADS. UNLESS SPECIFIED.
3. LAST DESIGNATION USED R46 - P3 - T2 - CR7 - LDR9 - VT1 IC9 - Q2 - S3 - J2
4. ALL IC'S ARE 741.

LAMP 1 = 2187 28V 40mA

LAMP 2 = 387 28V 40mA

SCHEMATIC BOARD NO. PFA	TEL-RAY ELECTRONICS		