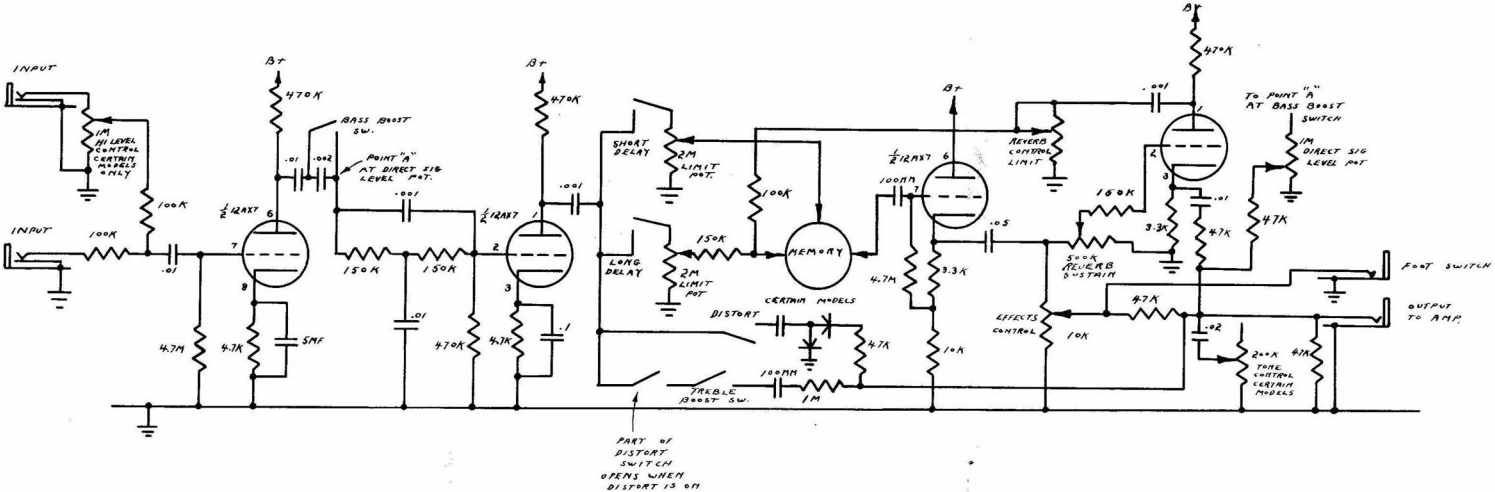

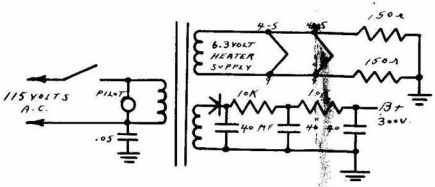

SCHEMATIC DIAGRAM