SCHMCLW1.DWG

9-11-02

ENGINEERING

REVISIONS				
ZONE	REV	DESCRIPTION	DATE	APPROVED

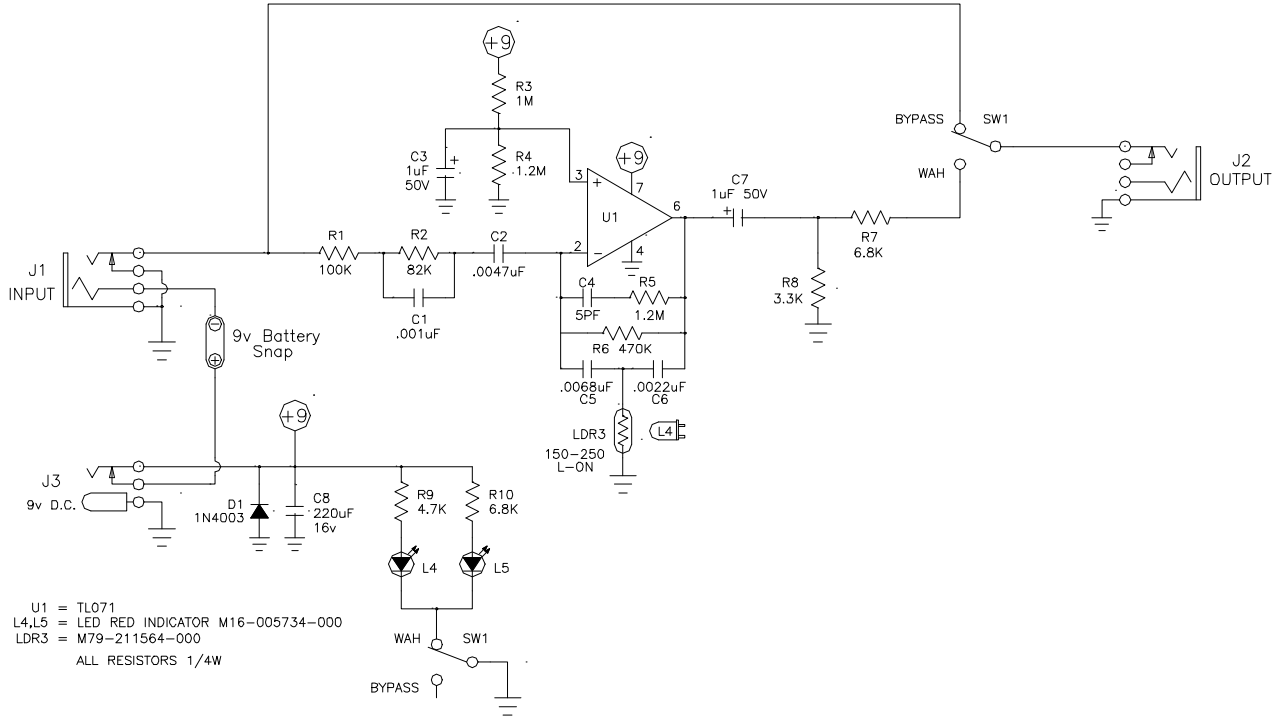

U1 = TL071
L4,L5 = LED RED INDICATOR M16-005734-000
LDR3 = M79-211564-000
ALL RESISTORS 1/4W

THIS PRINT
HAS BEEN APPROVED
FOR PRODUCTION

APPROVED: S.F. DATE: 1/25/02

UNLESS OTHERWISE SPECIFIED:

ALL RESISTORS 1/4 WATT
ALL RESISTORS 5 %

MORLEY

SOUND ENHANCEMENTS, INC.
185 DETROIT ST., CARY IL. 60013
(847) 639-4646

CLASSIC WAH (CLW)

This drawing and the information contained herein is the exclusive property of Sound Enhancements Inc. Reproduction or use of this information in any form, without our prior written approval, is prohibited.

DRAWN	SCOTT FLESHER	SIZE	FSCM NO.	FILE NAME	REV
Part No.	201-000102-000	A		schmclw1.dwg	A
DATE	1-25-02	SCALE N.T.S.		STATUS CURRENT	