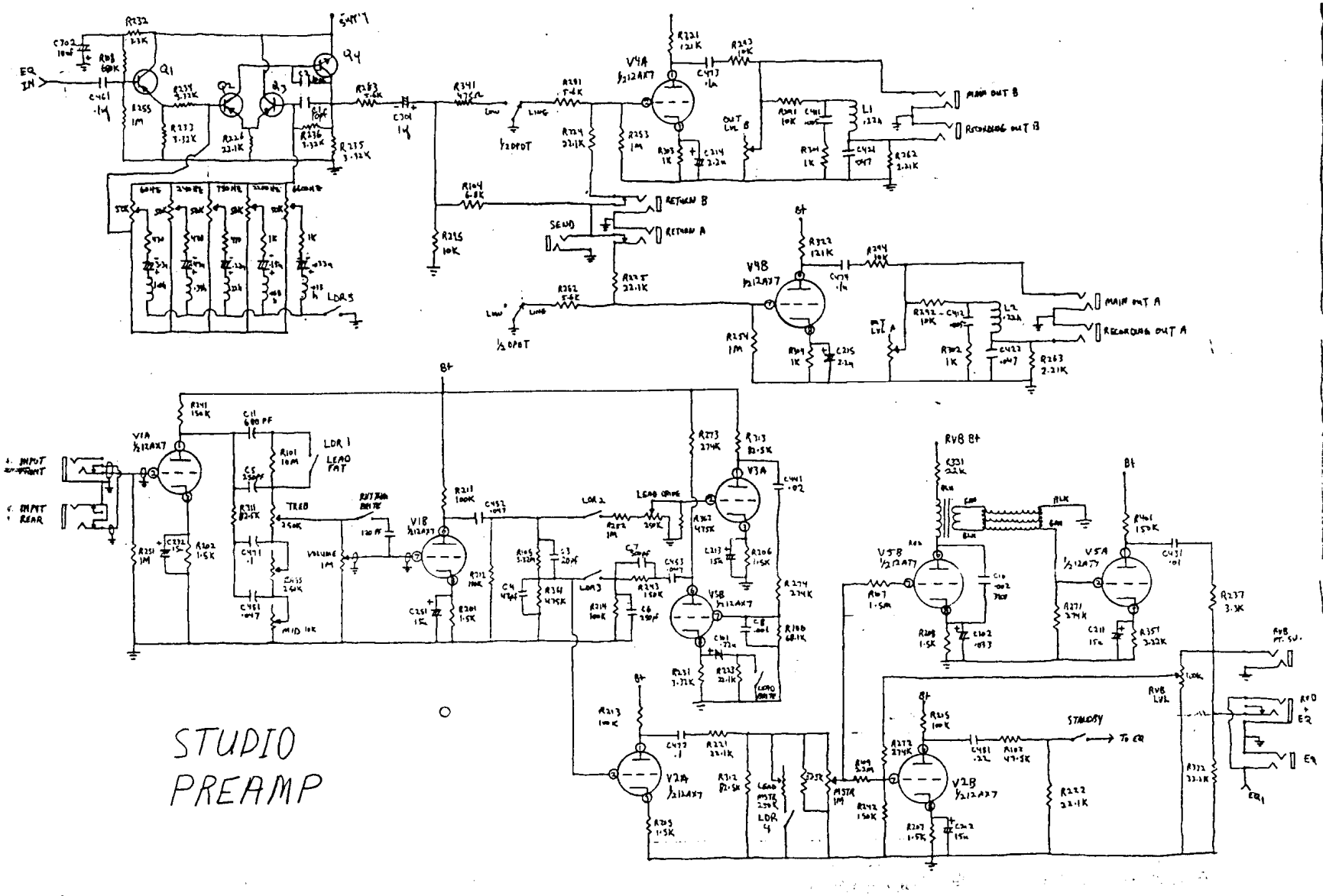

V5
B A
V5 B: rev. send
V5 A: rev. recieve

V4
B A
main outs

V3
B A
lead overdrive tube

V2b
reverb mix
EQ send

V2
B A
V2a: 3rd triode (rhythm)
4th triode (after V3, lead)

V1
B A
input + tone

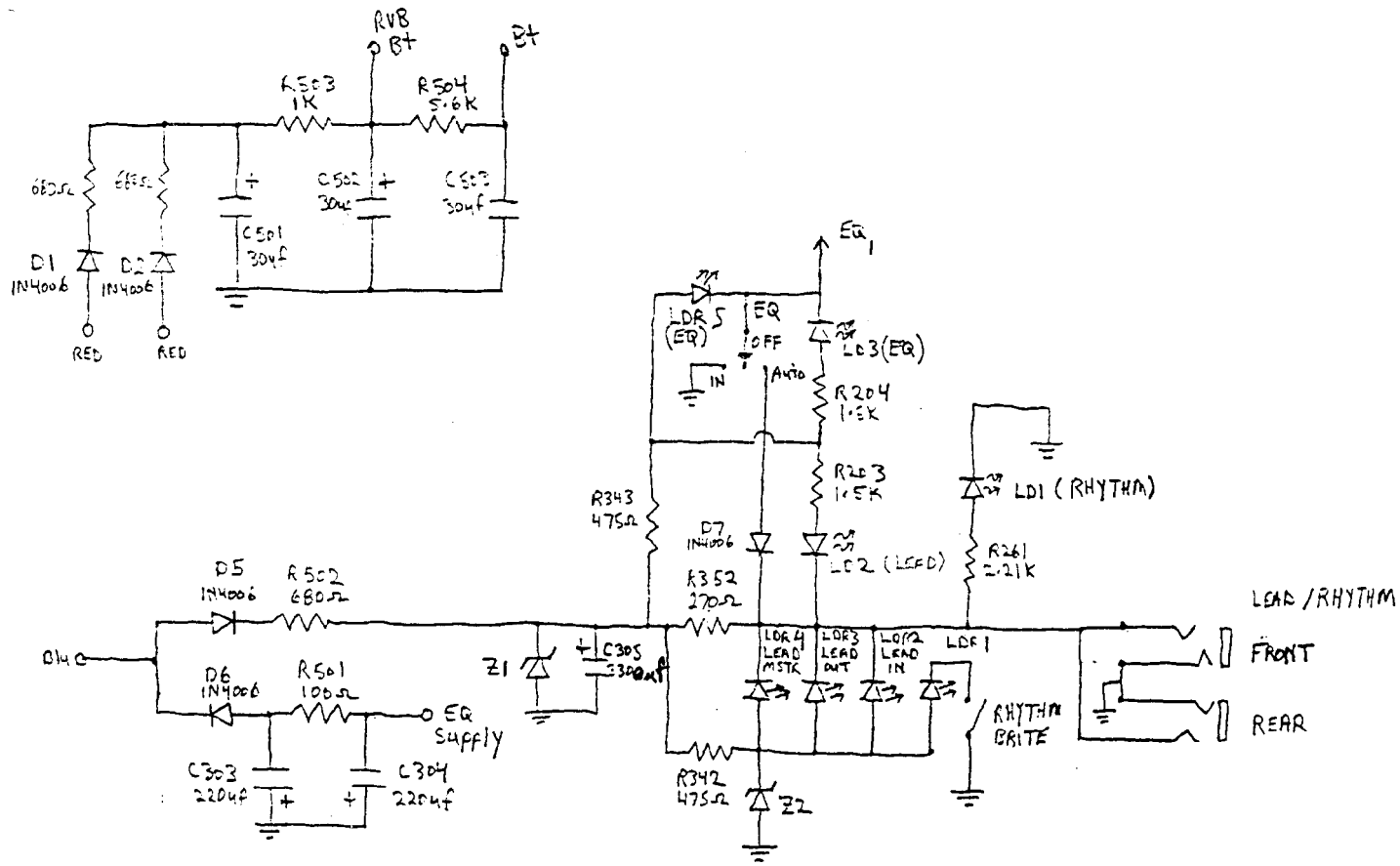
RVB
B+
B+
R503
1K
R504
5.6K
C501
30uf
C502
30uf
C503
30uf
D1
1N4006
D2
1N4006
RED
RED
EQ
LDR5
(EQ)
OFF
IN
AUTO
LD3(EQ)
R204
1.5K
R203
1.5K
R343
475Ω
D7
1N4006
LD2 (LEAD)
LD1 (RHYTHM)
R261
2.21K
D5
1N4006
R502
680Ω
R352
270Ω
LEAD /RHYTHM
BLK
D6
1N4006
R501
100Ω
Z1
C305
330uf
LDR4
LEAD
MSTR
LDR3
LEAD
OUT
LDR2
LEAD
IN
LDR1
FRONT
REAR
EQ
Supply
RHYTHM
BRITE
C303
220uf
C304
220uf
R342
475Ω
Z2

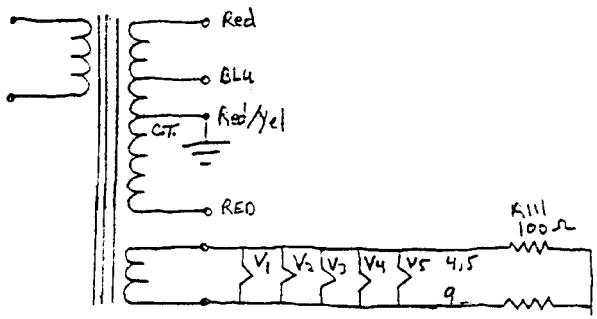
Red
BLK
Red/Yel
CT
RED
R111
100Ω
V1
V2
V3
V4
V5
4.5
9