Marshall Guv´nor

Drawn by Michael Burgundy - 22/6/99
http:/www.oli.tudelft.nl/burgundy

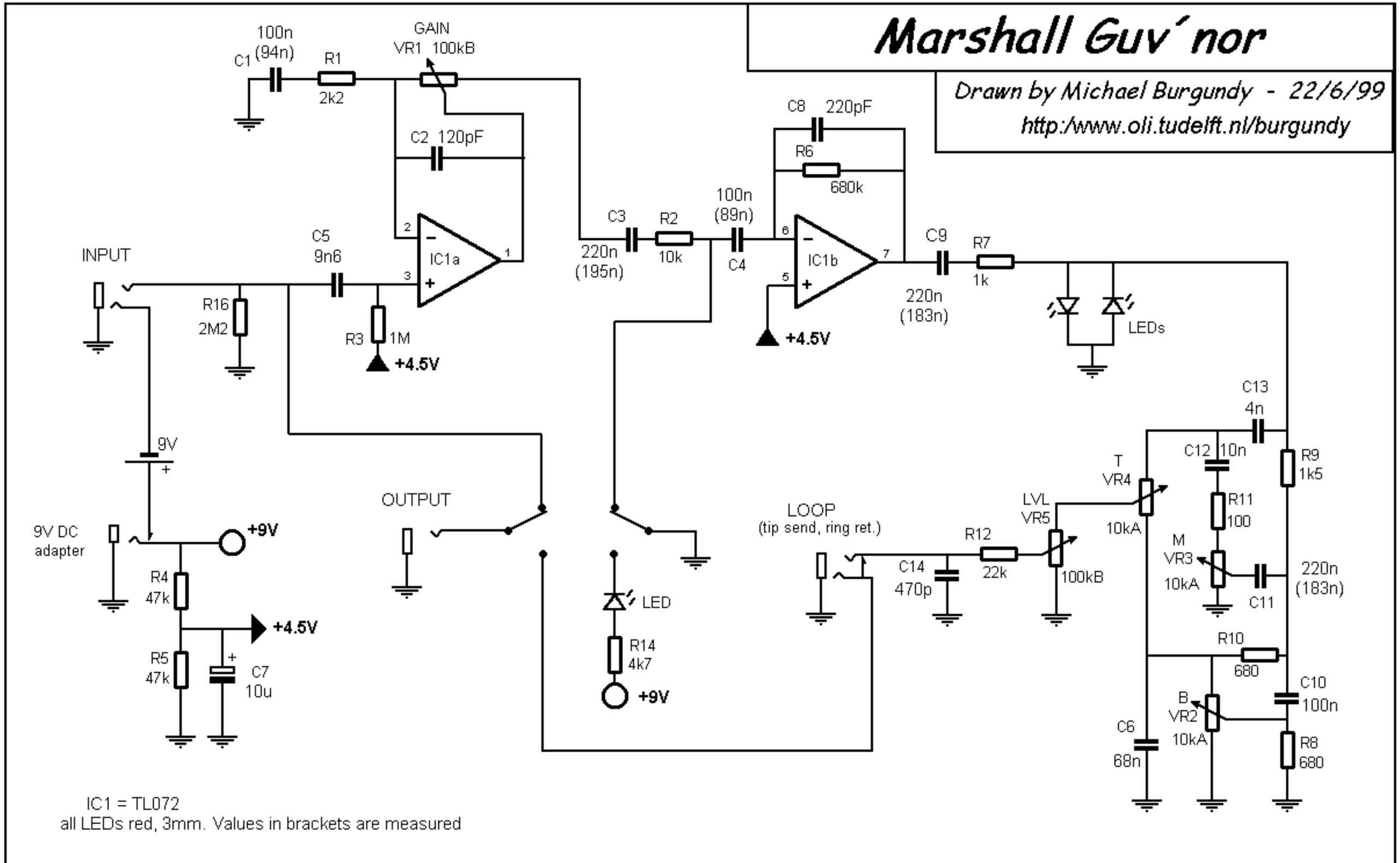

IC1 = TL072
all LEDs red, 3mm. Values in brackets are measured