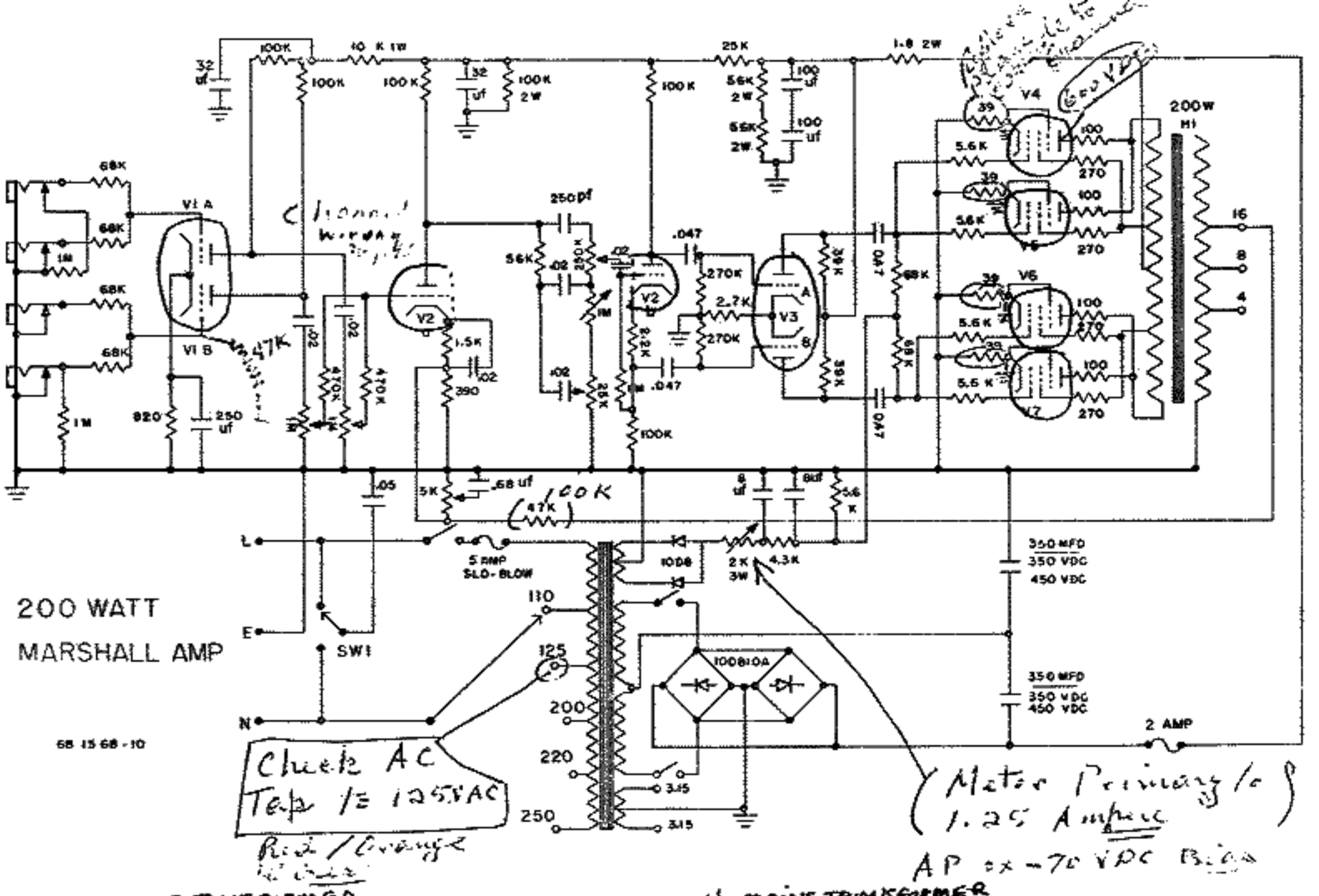

200 wt OUTPUT TRANSFORMER

Primary

Anodes- black
Screen - brown
C.T. - yellow & white
or yellow
Screen - blue
Anode - orange

Secondary

0 - red
4 ohm - black
8 ohm - yellow

16 ohm - green

200 wt. MAINS TRANSFORMER

Primary

0 - orange
110 - white
120 - red
200 - brown
225 - blue
245 - violet

Secondary

H.T. - red - red
C.T. - black
Bias - blue - blue
C.T. - yellow
Heaters - black - black
C.T. - green
Screen - green