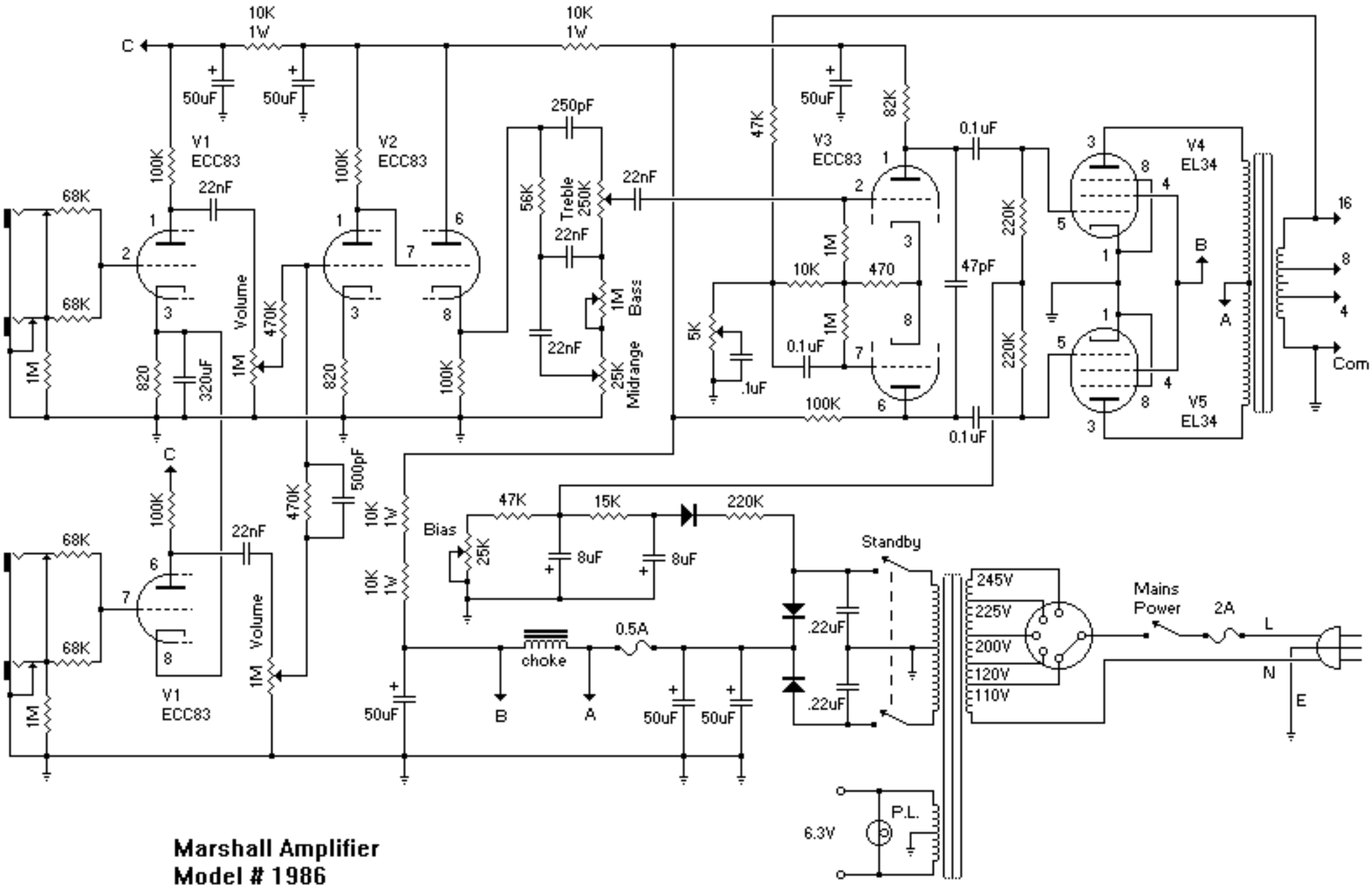

Marshall Amplifier
Model # 1986
Drawn By: Joe Piazza
1 / 9 / 97

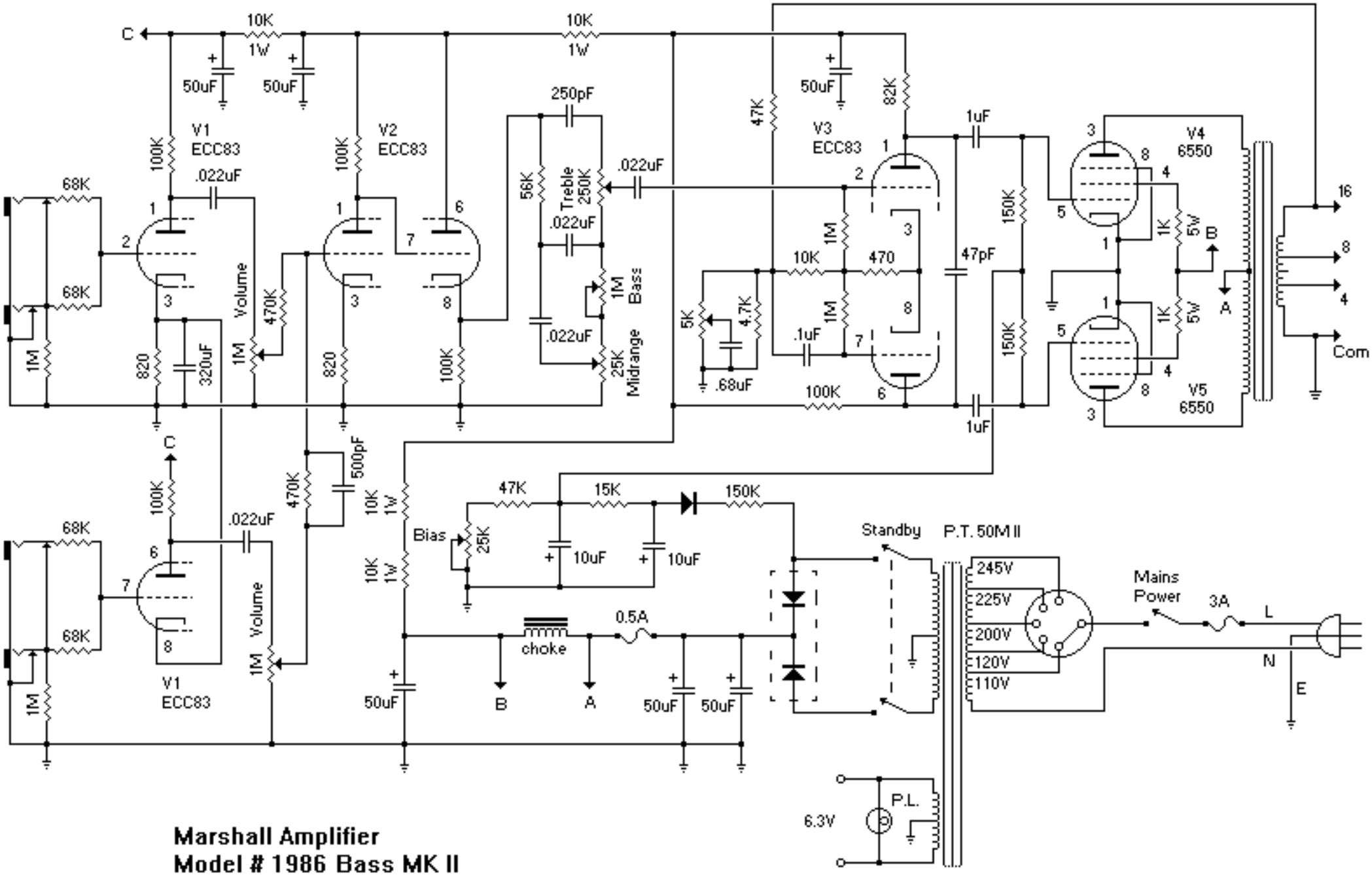

Marshall Amplifier
Model # 1986 Bass MK II

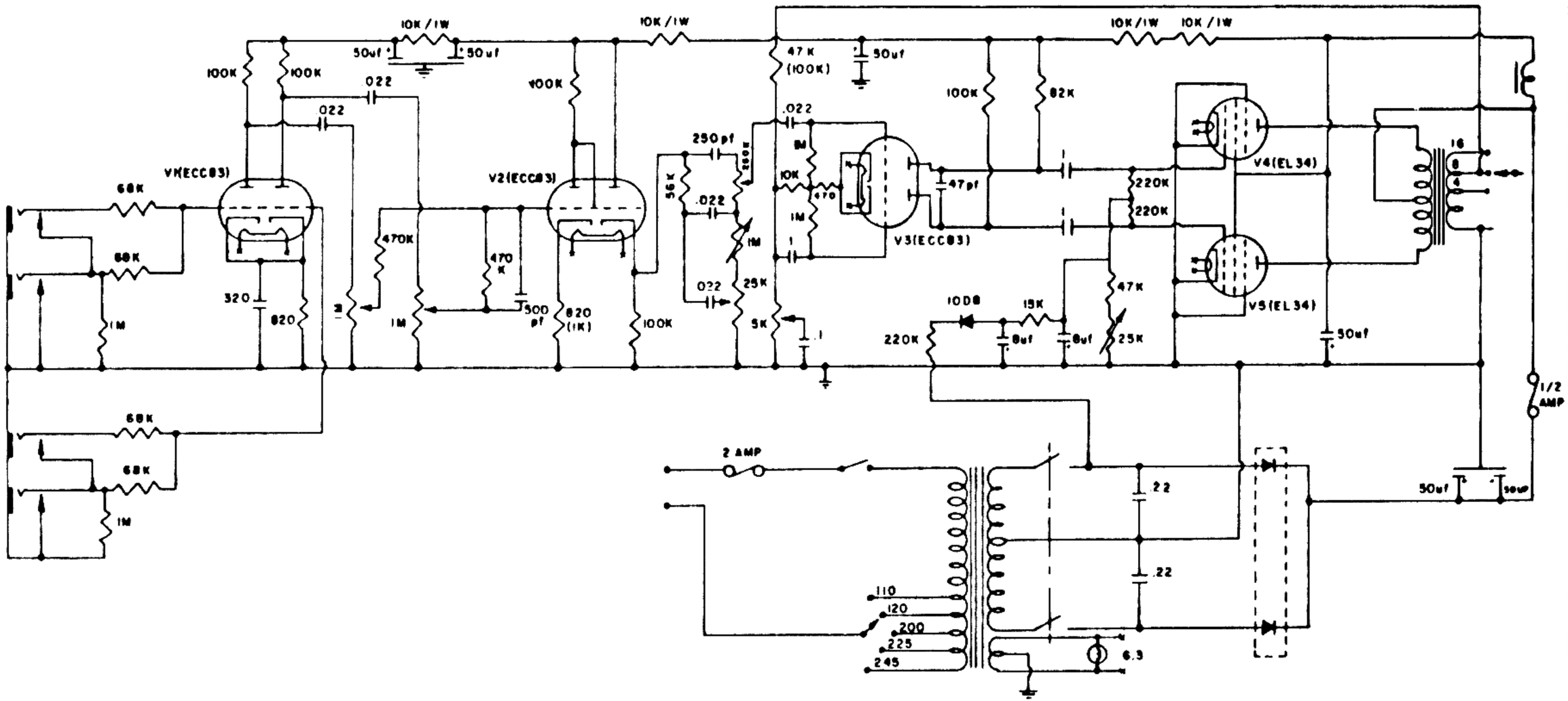

MARSHALL
1986

GW
UNICORD INCORPORATED
75 FROST STREET WESTBURY, N Y 11590

70-23-11

SCALE:

JULY 70