MODEL 257 AMPLIFIER

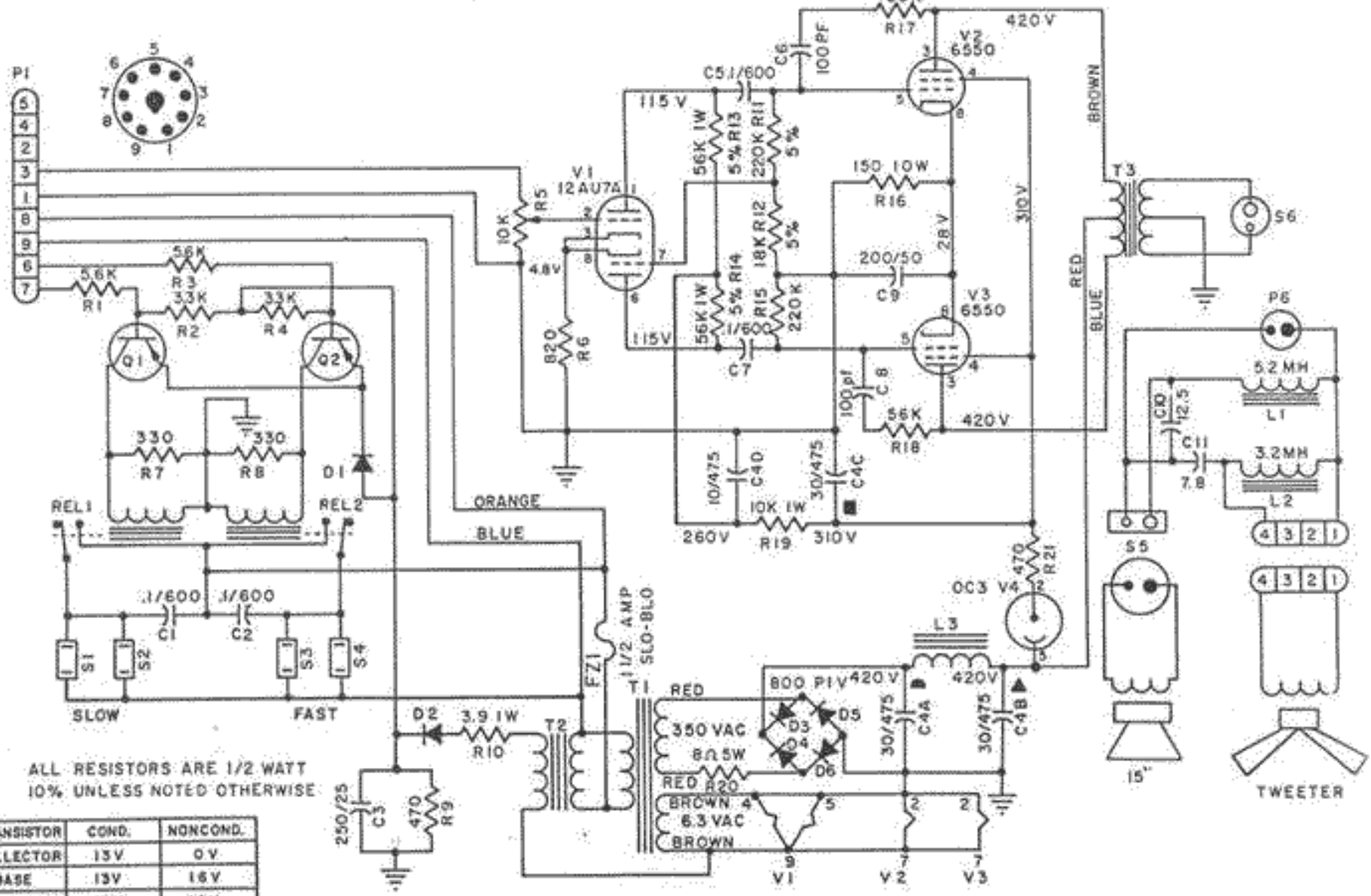

ALL RESISTORS ARE 1/2 WATT
10% UNLESS NOTED OTHERWISE

TRANSISTOR	COND.	NONCOND.
COLLECTOR	13V	0V
BASE	13V	16V
EMITTER	13V	16V