FENDER MODEL

"VIBRO-CHAMP AMP AB764" SCHEMATIC

THIS PRODUCT MANUFACTURED UNDER ONE OR MORE OF THE FOLLOWING U.S. PATENTS - #2817708, # 2973681, 192859 / PATENTS PENDING.

1-FD

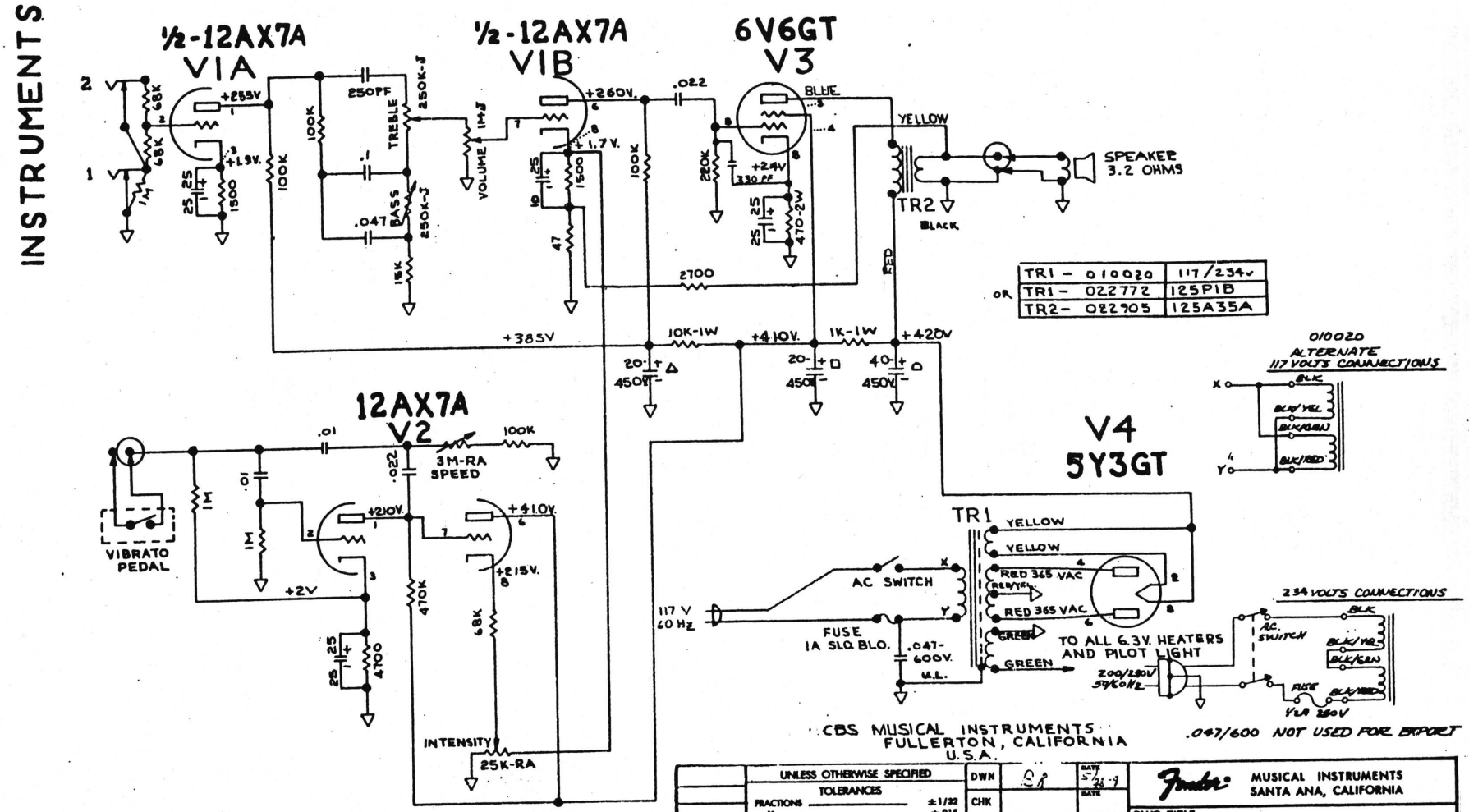

5. CBS P/N FOR CONTROLS INDICATED
4. WIRE COLORS SUBJECT TO CHANGE
3. ALL CAPACITORS AT LEAST 600V RATING IF NOT SPECIFIED
2. ALL RESISTORS 1/2 W ± 10 %, IF NOT SPECIFIED
1. VOLTAGES READ TO GROUND WITH V.T.V.M. WITH VIBRATO-
GROUNDED (EXCEPT V2) - NO INPUT SIGNAL

NOTES: UNLESS OTHERWISE SPECIFIED

A	ADDED ALTERNATE TRANS-FORMER CONNECTIONS ECO 2939	6-7-71

USED ON

UNLESS OTHERWISE SPECIFIED
TOLERANCES
FRACTIONS ±1/32
.X ±.015
.XX ±.010
.XXX ±.005
ANGLES ±½°
FRACTIONAL WOOD ±1/16
HOLES - CORED +.005 -.000
HOLES - DRILLED +.003 -.000

UNMARKED ANGLES ARE 90°
ALL DIMENSIONS ARE IN INCHES
DO NOT SCALE DRAWING

DWN — DATE 5-21-71
CHK — DATE
APPD M.E. — DATE
APPD E.E. — DATE 3-24-71
MATERIAL:
FINISH:

Fender MUSICAL INSTRUMENTS SANTA ANA, CALIFORNIA

DWG. TITLE
SCHEMATIC & WIRING DIAGRAM (DOMESTIC & EXPORT)
VIBRO CHAMP AMP

REL. NO. — SIZE D — DWG NO. 045401 — REV A
SCALE — MODEL VIBRO CHAMP TUBE — SHEET 1 OF 2

FENDER MODEL "VIBRO-CHAMP-AMP AB764" LAYOUT

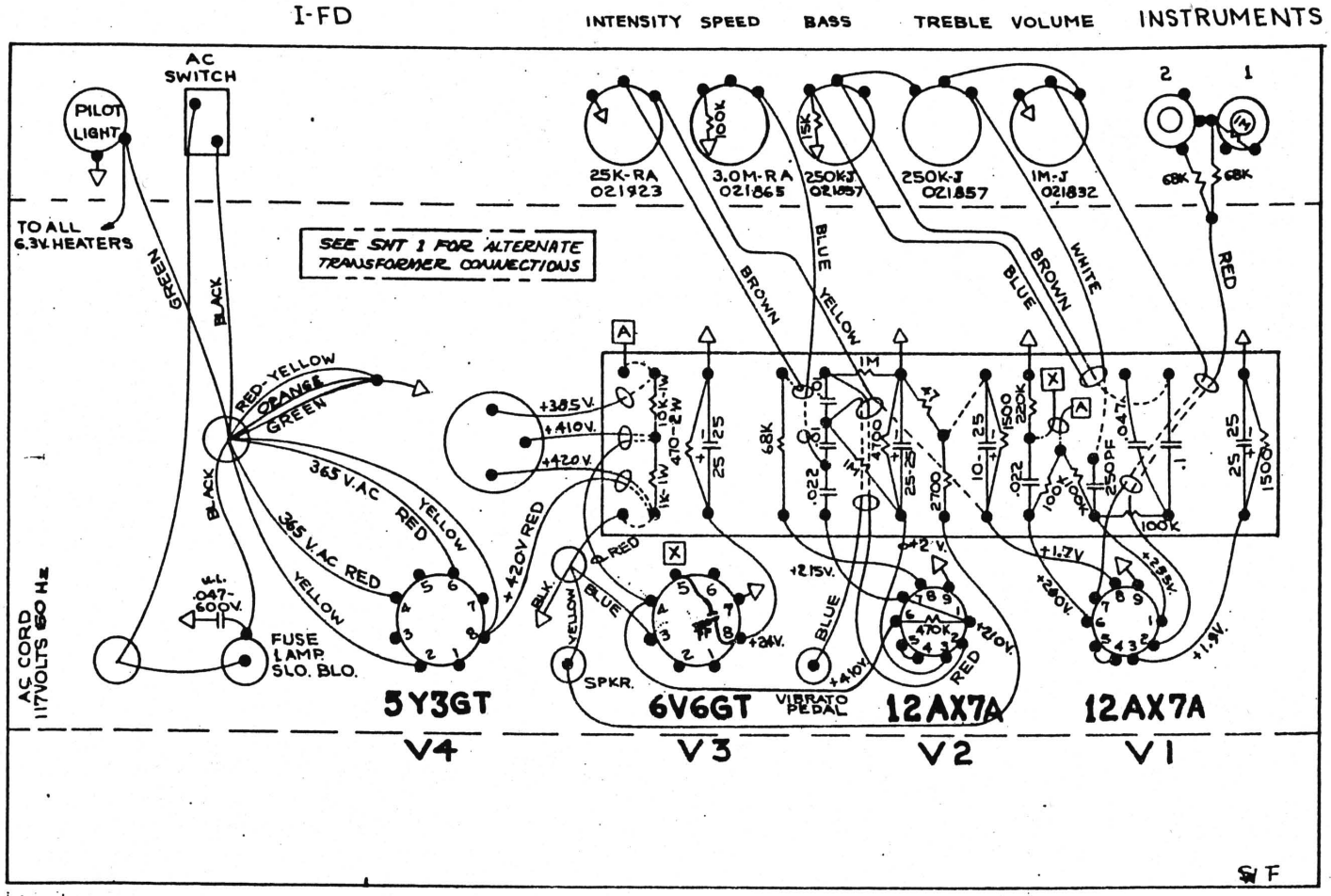

CBS MUSICAL INSTRUMENTS
FULLERTON, CALIFORNIA
U.S.A.

A	ADDED ALTERNATE TRANSFORMER CONNECTIONS ECO 2929	6-1-71	

UNLESS OTHERWISE SPECIFIED

TOLERANCES

FRACTIONS	±1/32
.X	±.015
.XX	±.010
.XXX	±.005
ANGLES	±½°
FRACTIONAL WOOD	±1/16
HOLES - CORED	+.005 −.000
HOLES - DRILLED	+.003 −.000

UNMARKED ANGLES ARE 90°
ALL DIMENSIONS ARE IN INCHES
DO NOT SCALE DRAWING

		DATE
DWN	B.R.	5/28-71
CHK		DATE
APPD M.E.		DATE
APPD E.E.		DATE 3-29-71

MATERIAL:

FINISH:

Fender MUSICAL INSTRUMENTS SANTA ANA, CALIFORNIA

DWG. TITLE
SCHEMATIC & WIRING DIAGRAM (DOMESTIC & EXPORT)
VIBRO CHAMP AMP

REL. NO.	SIZE	DWG NO.	REV
	D	045401	A
SCALE	MODEL VIBRO CHAMP	SHEET 2 OF 2	