STRONMBERG-CARLSON
APH1050 50 WATT AMPLIFIER

Original

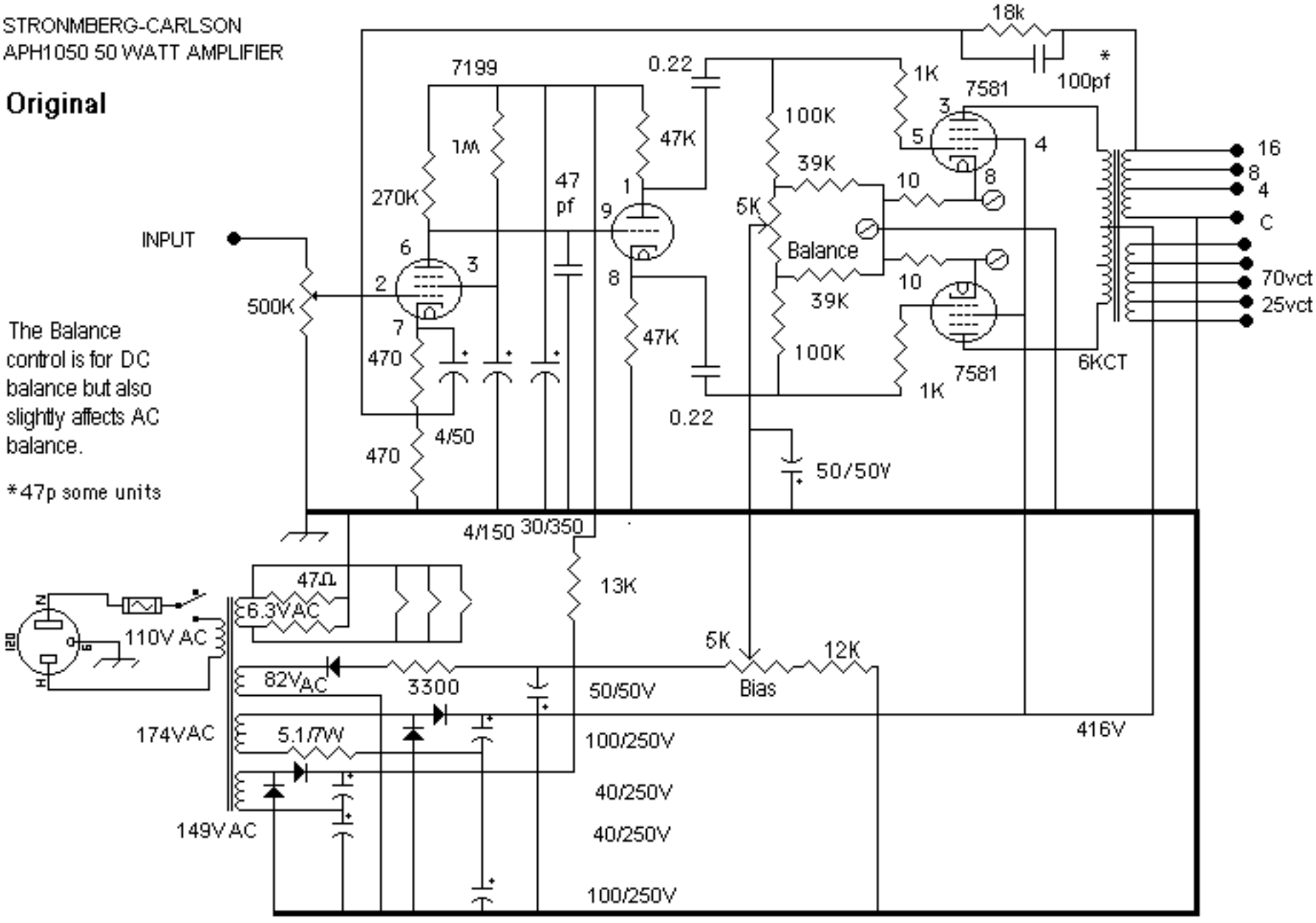

The Balance control is for DC balance but also slightly affects AC balance.

*47p some units

STRONMBERG-CARLSON
APH1050 50 WATT AMPLIFIER

AS MODIFIED BY
PATRICK JANKOWIAK
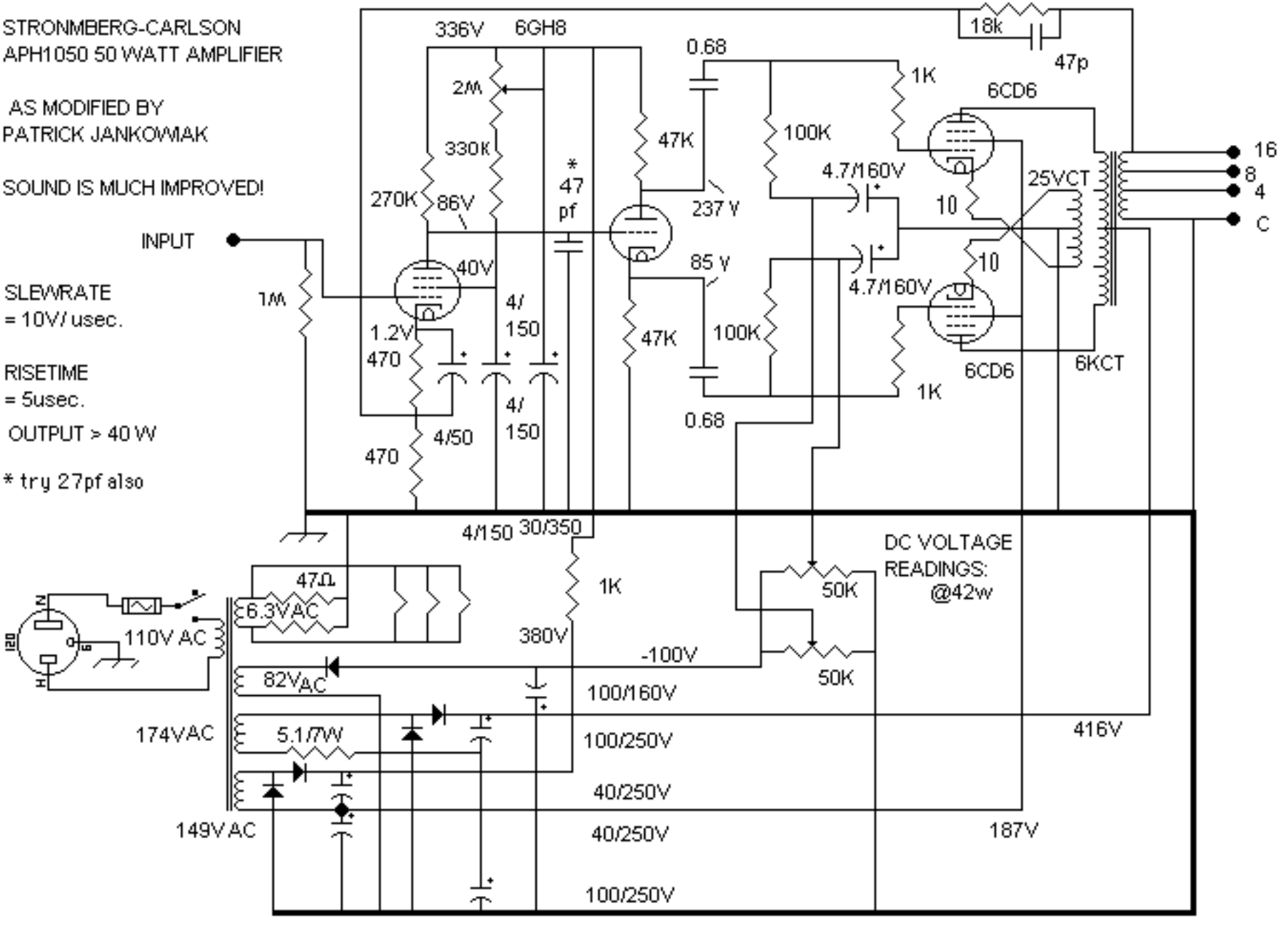
SOUND IS MUCH IMPROVED!