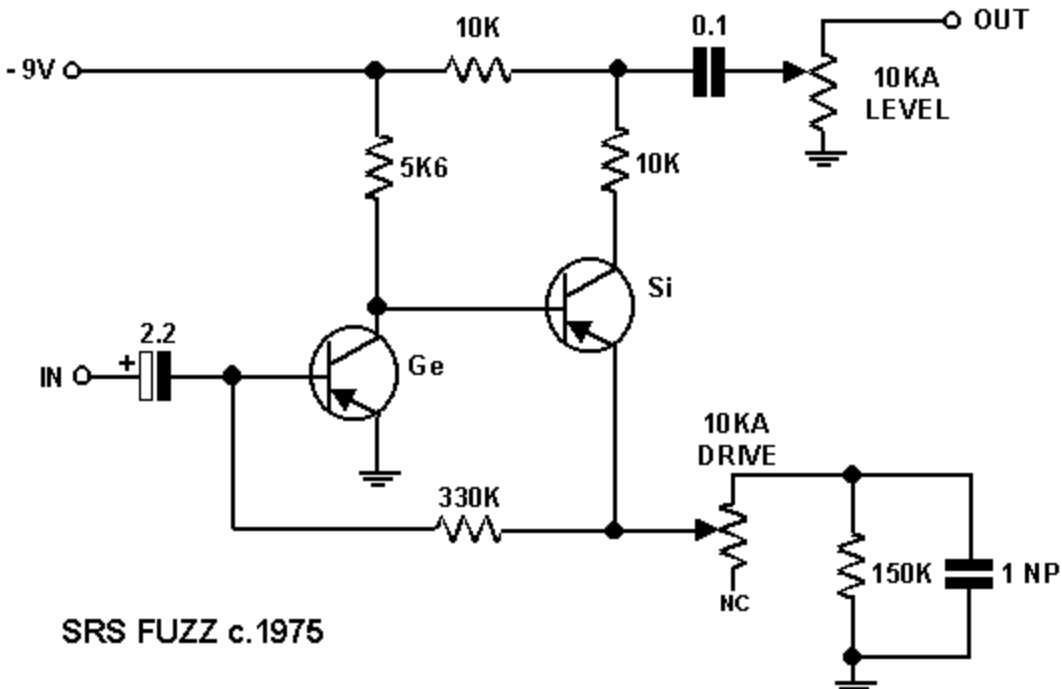

SRS FUZZ c.1975