FENDER MODEL "DELUXE REVERB-AMP SCHEMATIC

THIS PRODUCT MANUFACTURED UNDER ONE OR MORE OF THE FOLLOWING U.S. PATENTS
CIRCUIT PATENT #2817708, #2973681
DESIGN PATENT #192859

NOTICE

1. - VOLTAGES READ TO GROUND WITH ELECTRONIC VOLTMETER VALUES SHOWN + OR - 10%
2. - ALL RESISTORS ½ WATT 10% TOLERANCE IF NOT SPECIFIED
3. - ALL CAPACITORS AT LEAST 400 VOLT RATING IF NOT SPECIFIED
4. 010877 USED IN SOME VERSIONS

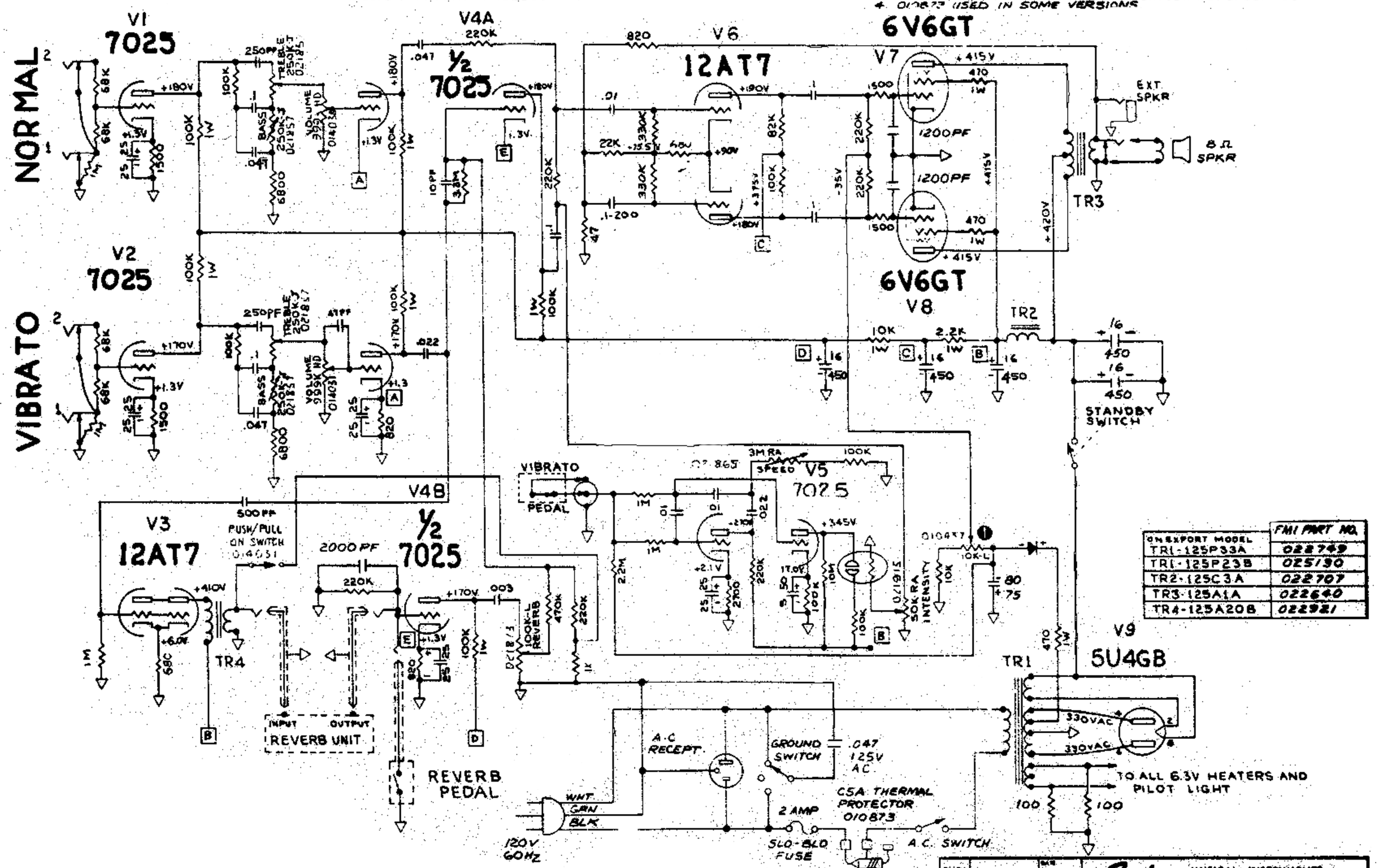

ON EXPORT MODEL	FMI PART NO.
TR1-125P33A	022749
TR1-125P23B	025130
TR2-125C3A	022707
TR3-125A1A	022640
TR4-125A20B	022921

DWN.	RON DICO	DATE 10-6-77	Fender MUSICAL INSTRUMENTS SANTA ANA, CALIFORNIA
CHK.			DWG. TITLE SCHEMATIC & WIRING DIAGRAM DELUXE REV-AMP W/ VOLUME BOOST
APPD.			
APPD.			
APPD.		10/6/77	
APPROVAL—			REL. NO. 10/6-7 · SIZE C · DWG. NO. 014641 · REV. —
APPROVAL—			SCALE · MODEL DELUXE REV-AMP · SHEET 1 OF 1