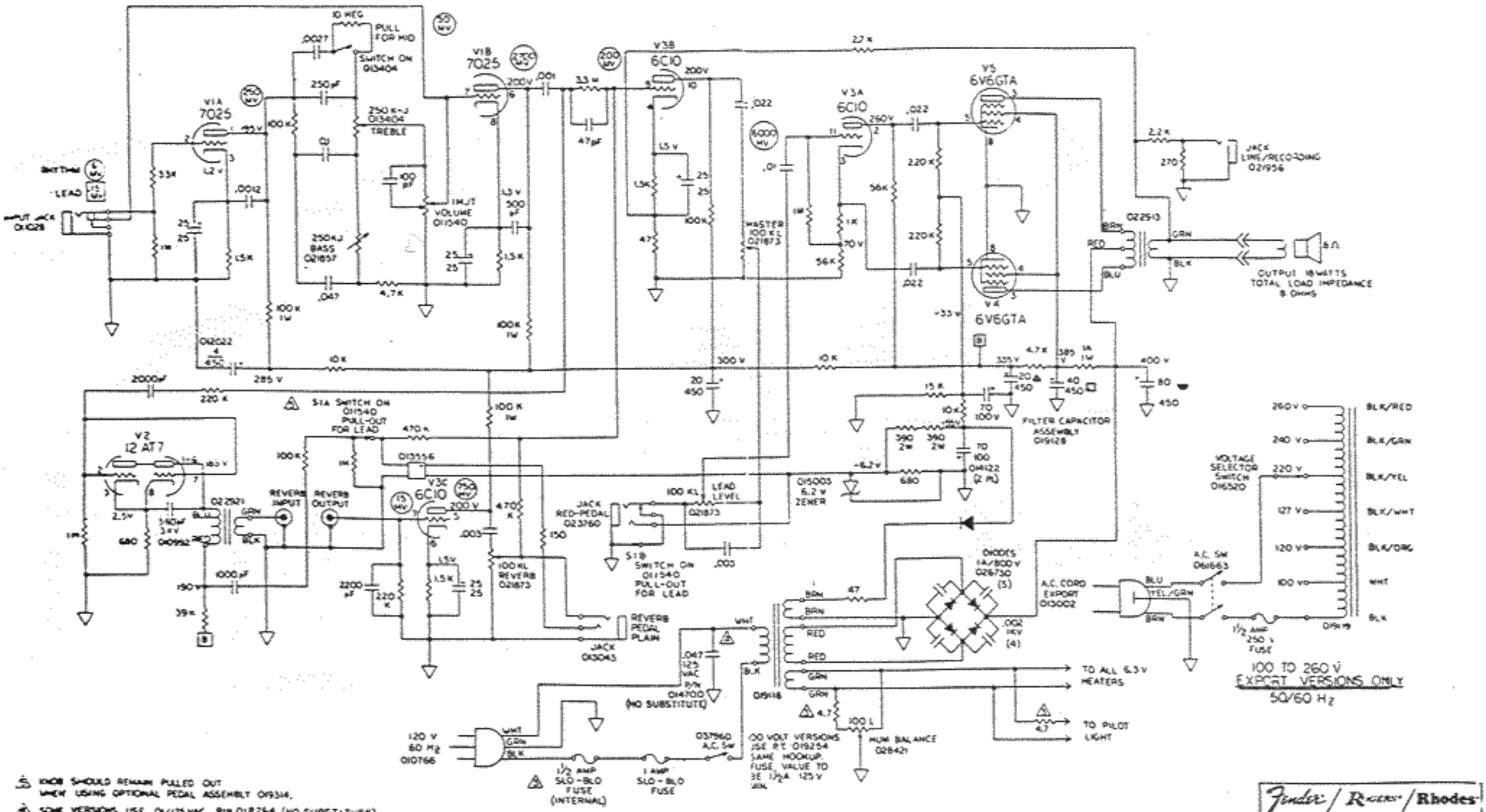

1. KNOB SHOULD REMAIN PULLED OUT WHEN USING OPTIONAL PEDAL ASSEMBLY 019314.
2. SOME VERSIONS USE .01/125 VAC, P/N 018764 (NO SUBSTITUTE)
3. USED IN SOME VERSIONS.
2. ALL CAPACITORS 600 V. MIN.
1. ALL RESISTORS ½ WATT ±10%.

(MV) DENOTES TYPICAL 1KHz SIGNAL REQUIRED FOR 1 WATT RMS OUTPUT AND 500 MV REVERB LOAD DRIVE IN RHYTHM MODE ALL CONTROLS MAX. AND BOOSTS OFF.

NOTE: UNLESS OTHERWISE SPECIFIED

Fender / Rogers / Rhodes

SCHEMATIC, SUPER CHAMP DOMESTIC, CSA, EXPORT & JAPAN 18 WATT REVERB AMP W/BOOST PEDAL

5 in 83	D	019130	A
SCALE NONE	MODEL NO. SUPER CHAMP		