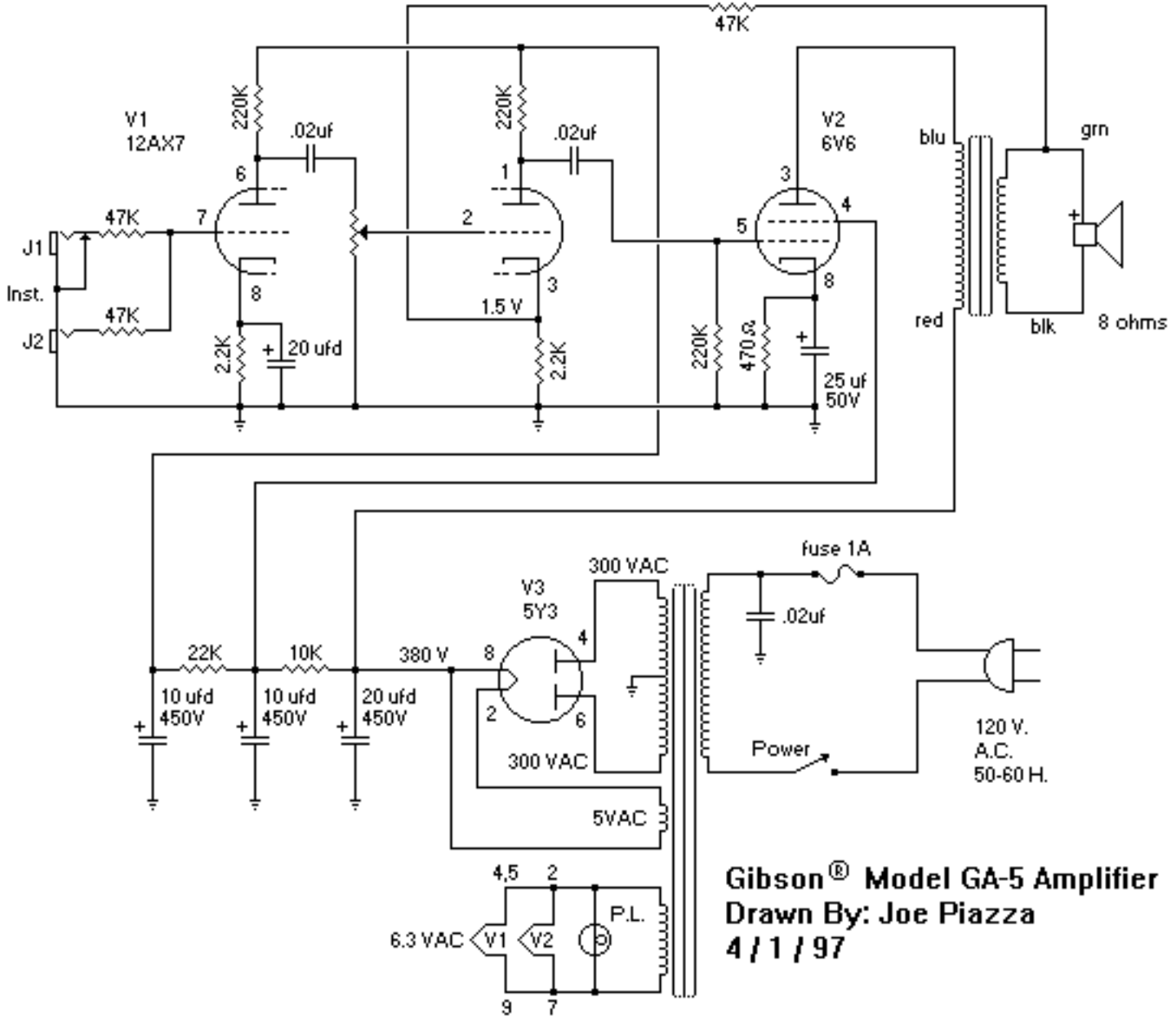
47K
V1
12AX7
220K
.02uf
220K
.02uf
V2
6V6
blu
grn
6
1
3
4
7
2
5
47K
J1
Inst.
47K
J2
8
3
8
1.5 V
red
blk
8 ohms
2.2K
20 ufd
2.2K
220K
470Ω
25 uf
50V
fuse 1A
300 VAC
V3
5Y3
.02uf
22K
10K
380 V
8
4
10 ufd
450V
10 ufd
450V
20 ufd
450V
2
6
300 VAC
Power
120 V.
A.C.
50-60 H.
5VAC
4,5
2
P.L.
6.3 VAC
V1
V2
9
7
Gibson® Model GA-5 Amplifier
Drawn By: Joe Piazza
4 / 1 / 97