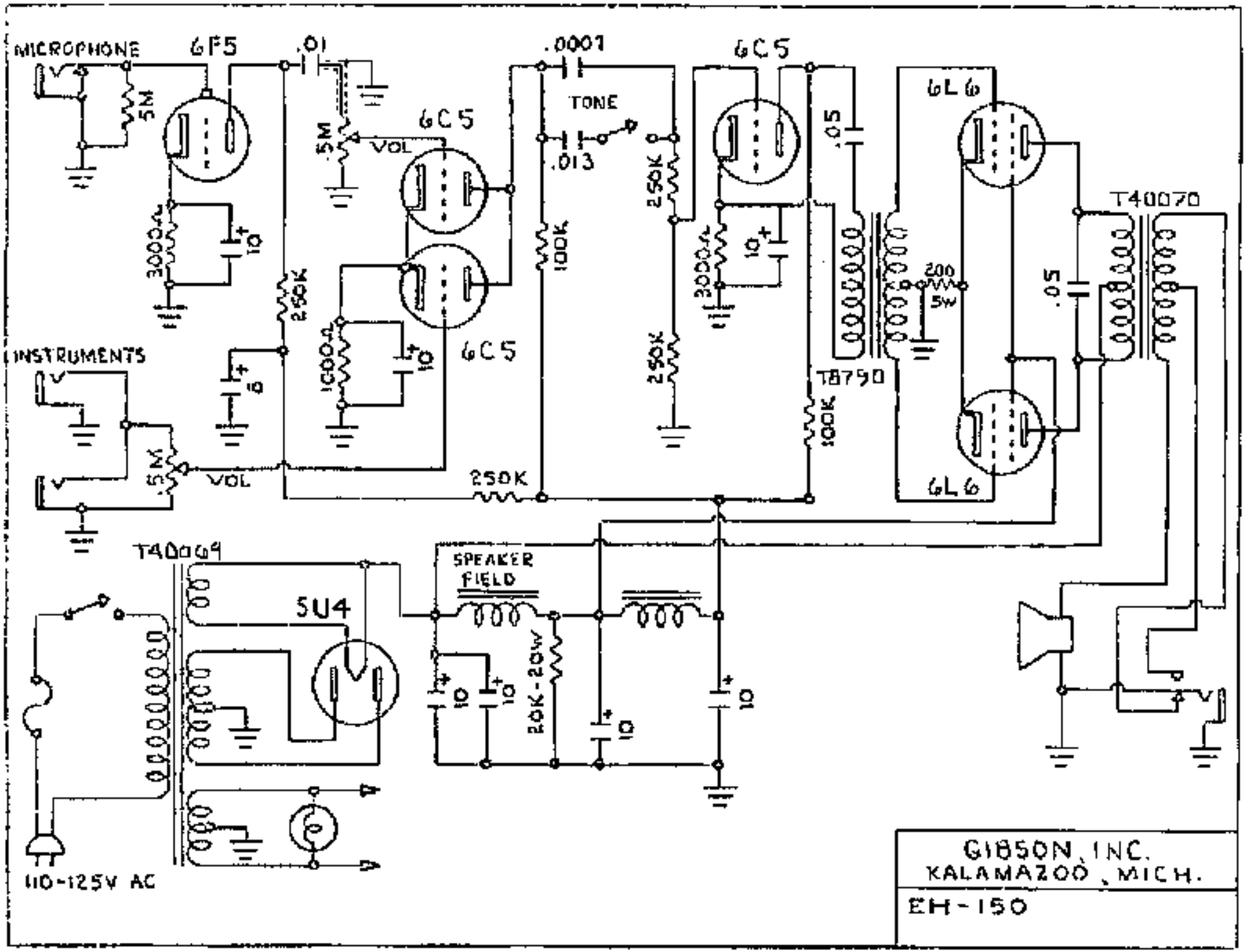
MICROPHONE
6F5
.01
.0001
6C5
TONE
6L6
5M
5M
VOL
6C5
.013
250K
T40070
3000Ω
10
250K
100K
3000Ω
10
200
5W
.05
.05
1000Ω
10
6C5
INSTRUMENTS
10
250K
T8790
100K
5M
VOL
250K
6L6
T40069
SPEAKER
FIELD
5U4
10
10
20K-20W
10
10
110-125V AC
GIBSON, INC.
KALAMAZOO, MICH.
EH-150