VOLTAGES MEASURED TO CHASSIS WITH V.T.V.M.

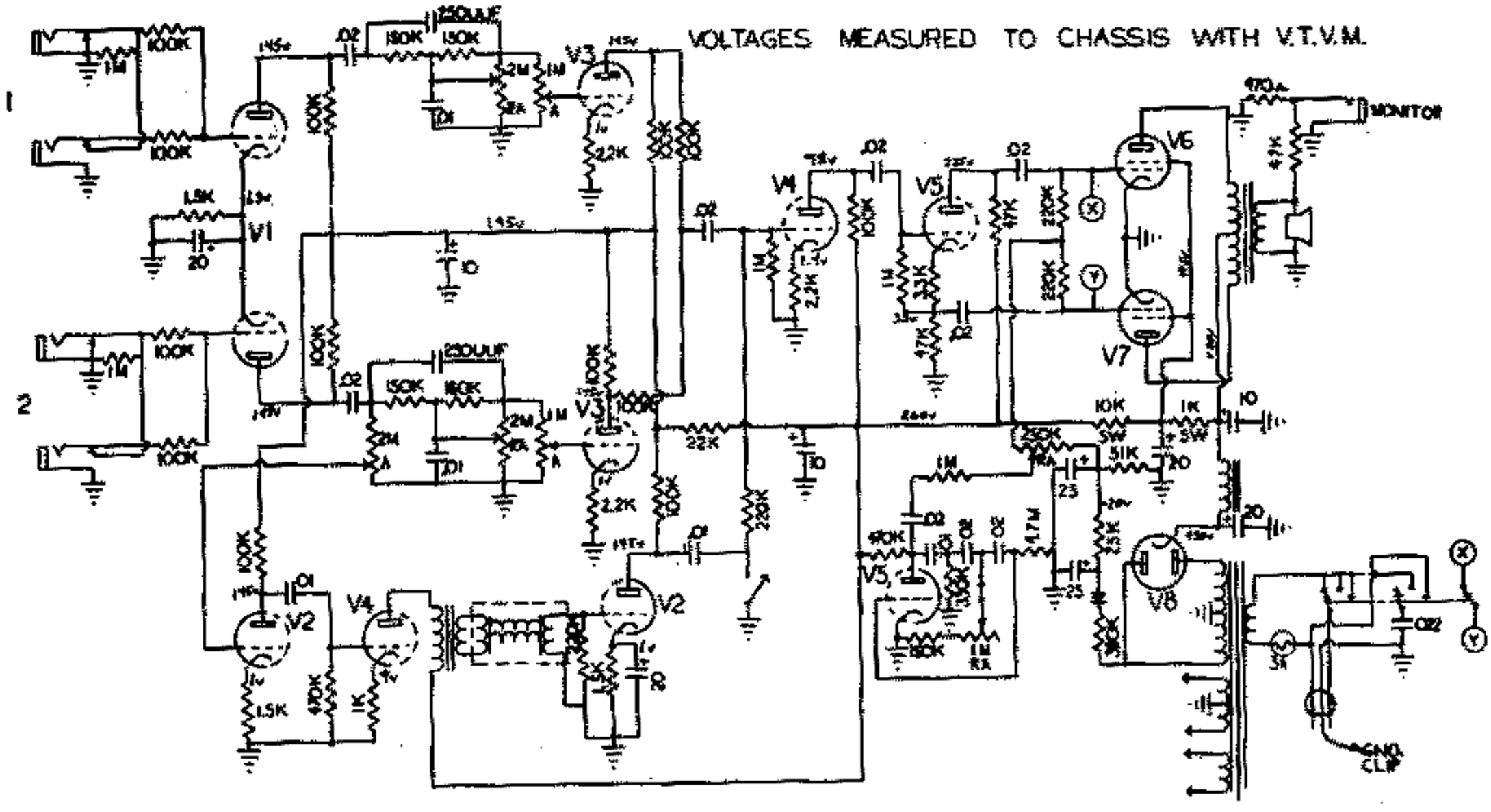

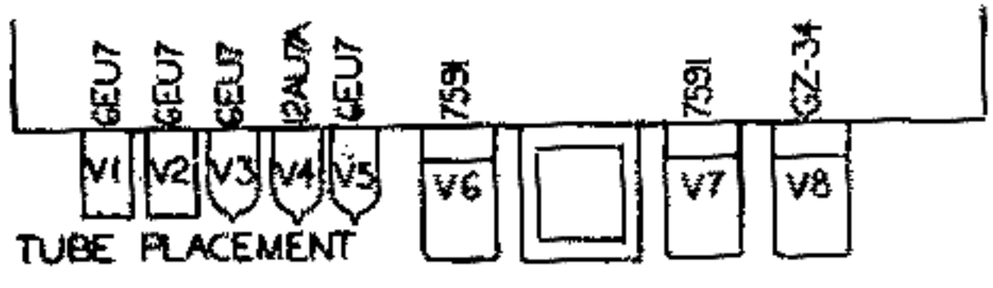

TUBE PLACEMENT

Gibson Model EA-12RVT.