FENDER MODEL "DELUXE REVERB-AMP AB763" SCHEMATIC

THIS PRODUCT MANUFACTURED UNDER ONE OR MORE OF THE FOLLOWING U.S. PATENTS
CIRCUIT PATENT #2817708, #2973681
DESIGN PATENT #192859

C-FD

NOTICE

1 - VOLTAGES READ TO GROUND WITH ELECTRONIC VOLTMETER VALUES SHOWN + OR - 20%
2 - ALL RESISTORS 1/2 WATT 10% TOLERANCE IF NOT SPECIFIED
3 - ALL CAPACITORS AT LEAST 400 VOLT RATING IF NOT SPECIFIED

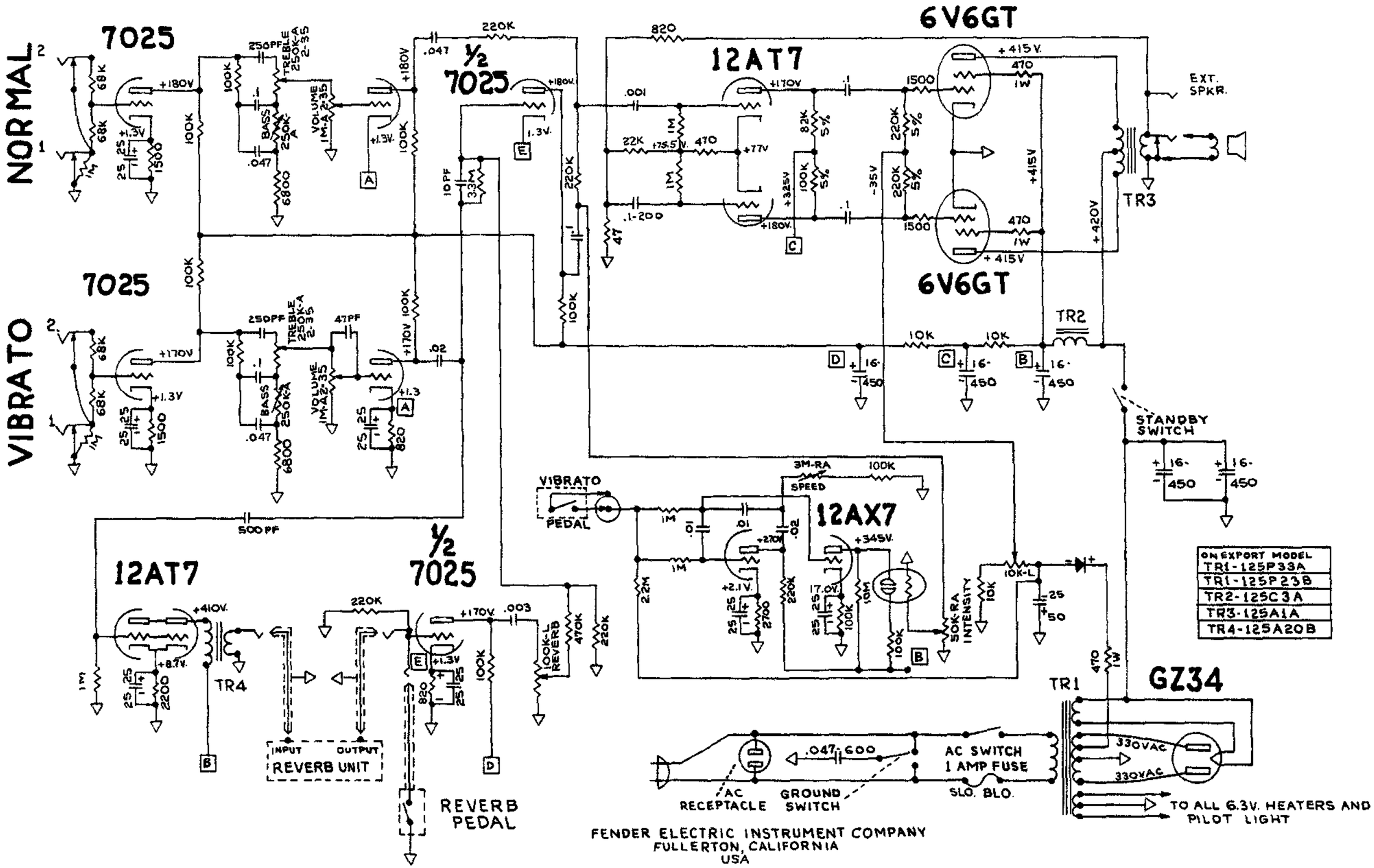

FENDER MODEL "DELUXE REVERB-AMP AB763" LAYOUT

C-FD

NOTICE
VOLTAGES READ TO GROUND WITH ELECTRONIC VOLTMETER VALUES SHOWN + OR − 20%

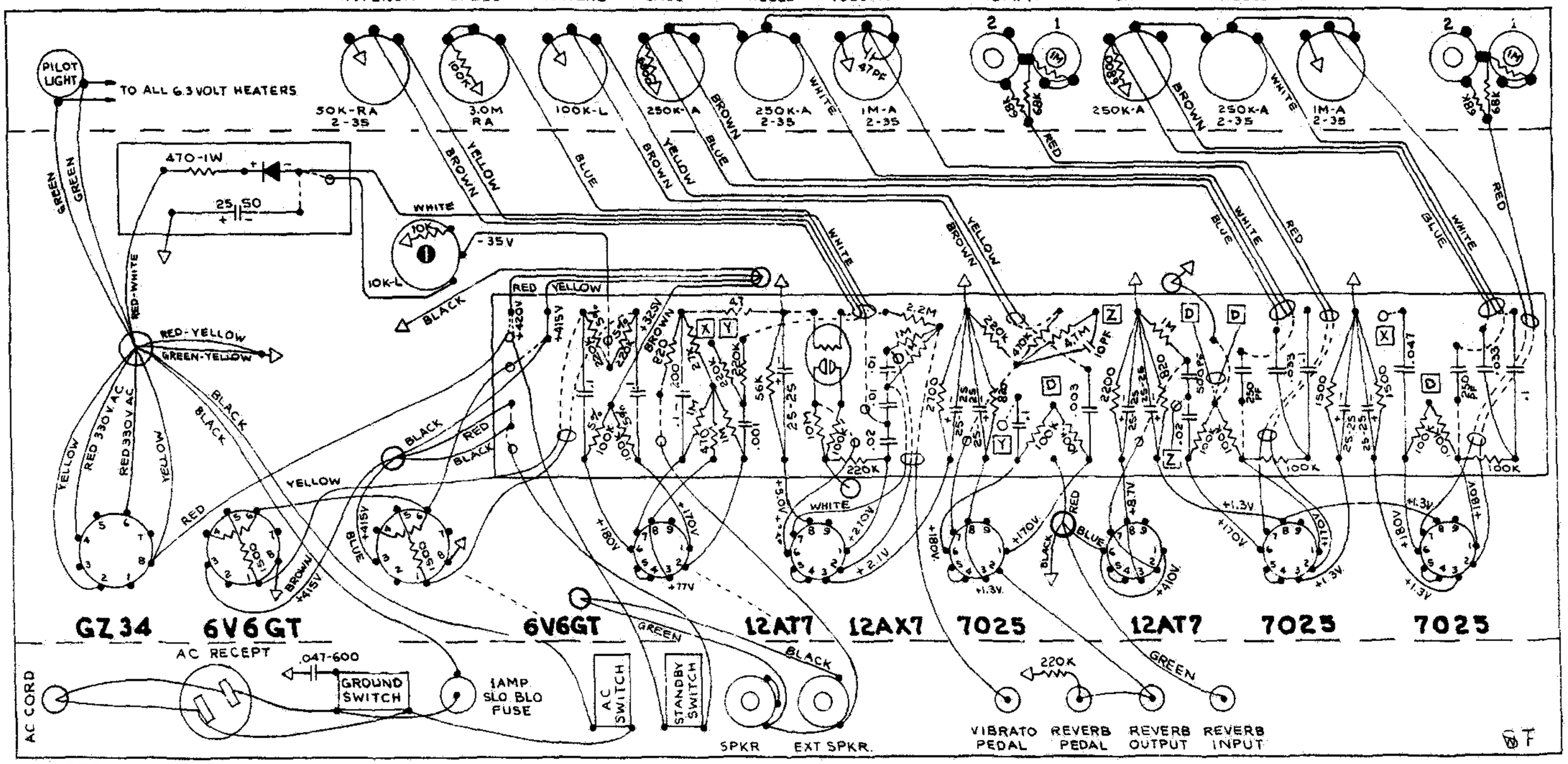

NOTE: ALL RESISTORS 1/2 WATT 10% TOLERANCE, IF NOT SPECIFIED.

NOTE: ALL CAPACITORS AT LEAST 400 VOLT RATING IF NOT SPECIFIED.

FENDER ELECTRIC INSTRUMENT COMPANY,
FULLERTON, CALIFORNIA