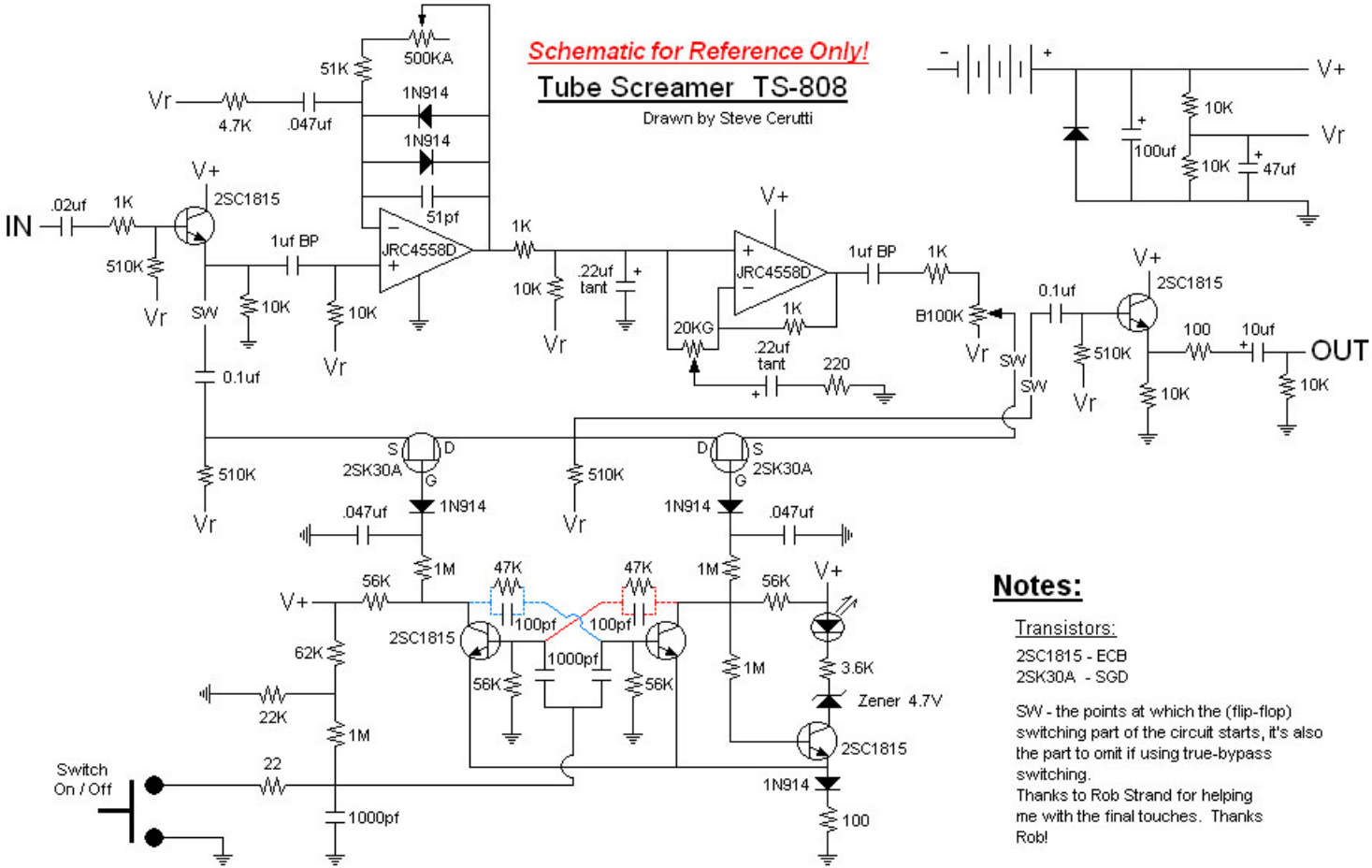
Schematic for Reference Only!
Tube Screamer TS-808
Drawn by Steve Cerutti
IN
OUT
V+
Vr
SW
2SC1815
JRC4558D
2SK30A
1N914
500KA
51K
4.7K
.047uf
.02uf
1K
510K
1uf BP
10K
0.1uf
51pf
.22uf tant
20KG
220
B100K
100
10uf
47uf
100uf
56K
47K
100pf
1000pf
1M
62K
22K
22
Switch On / Off
3.6K
Zener 4.7V
Notes:
Transistors:
2SC1815 - ECB
2SK30A - SGD
SW - the points at which the (flip-flop) switching part of the circuit starts, it's also the part to omit if using true-bypass switching.
Thanks to Rob Strand for helping me with the final touches. Thanks Rob!