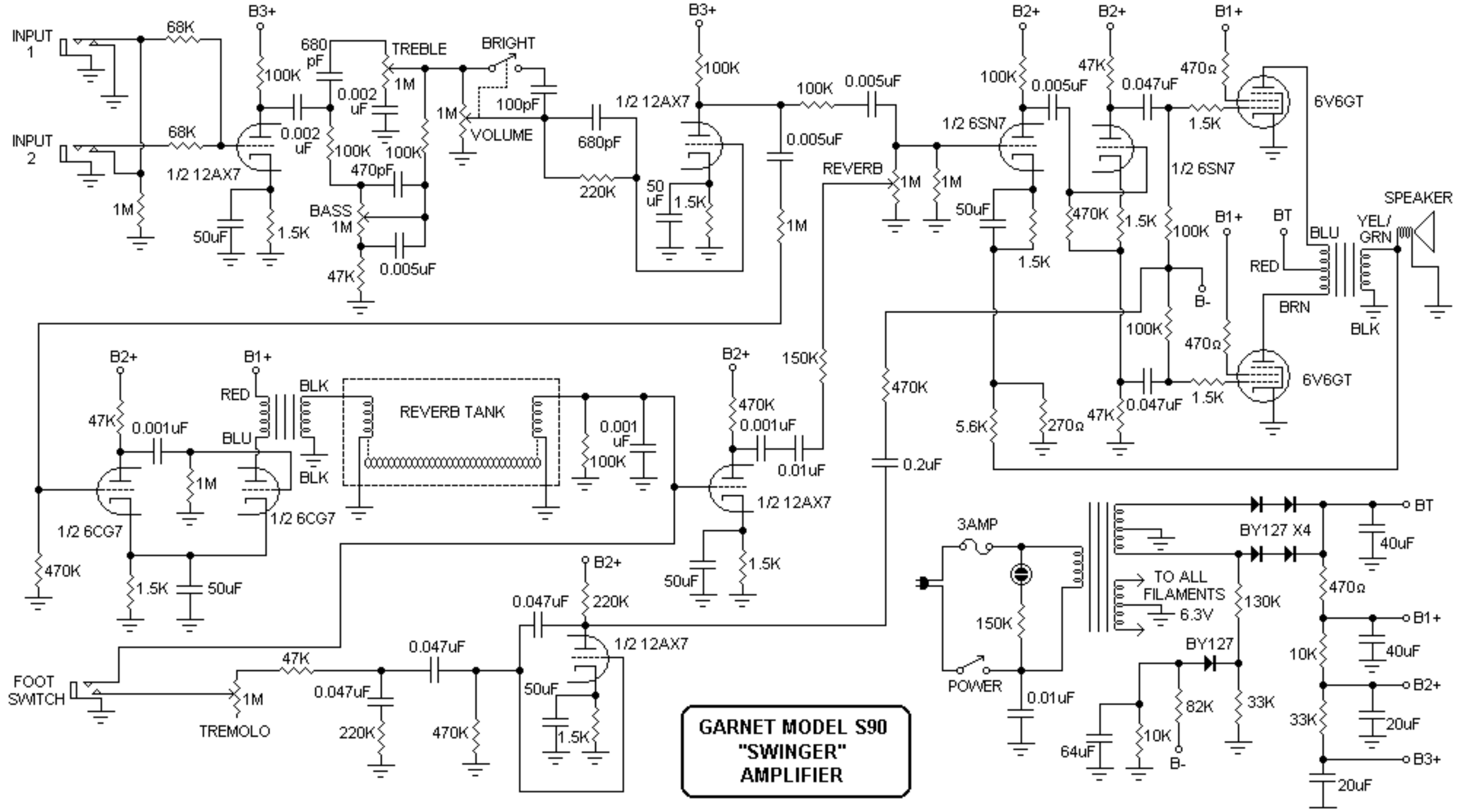

GARNET MODEL S90 "SWINGER" AMPLIFIER