DOD Compressor 280A

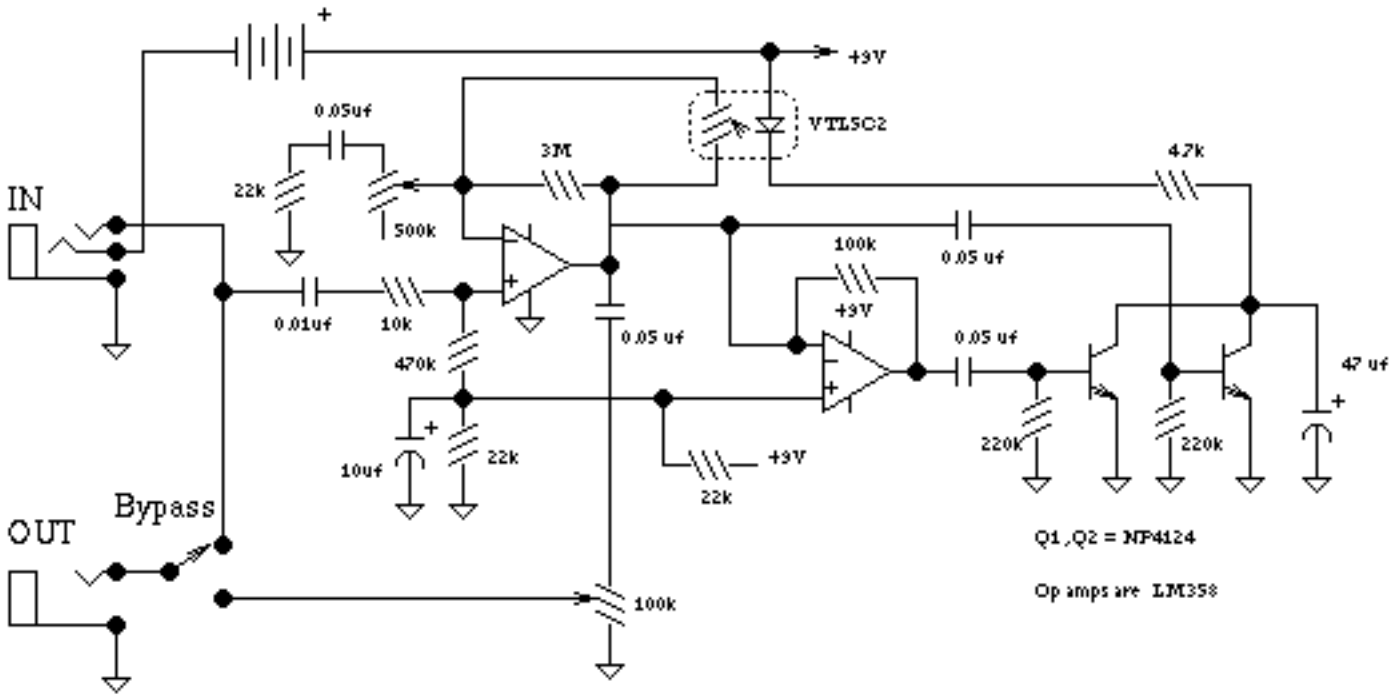
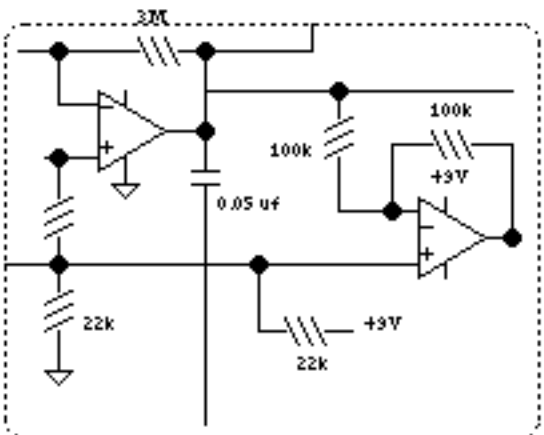
This is the original schematic, but it looks funny to me. I think that there should be a 100k resistor at the (-) input of the second opamp to make it a pure inverter. As it is, that stage would have a very large voltage gain, unbalancing what I think works as a full wave rectifier/current source for the LED in the compression feedback loop. I would expect that the proper circuit is as shown in the fragment below. I think the VTL5C2 LED/LDR module could be replaced with a CLM6000 if you could find one of those.