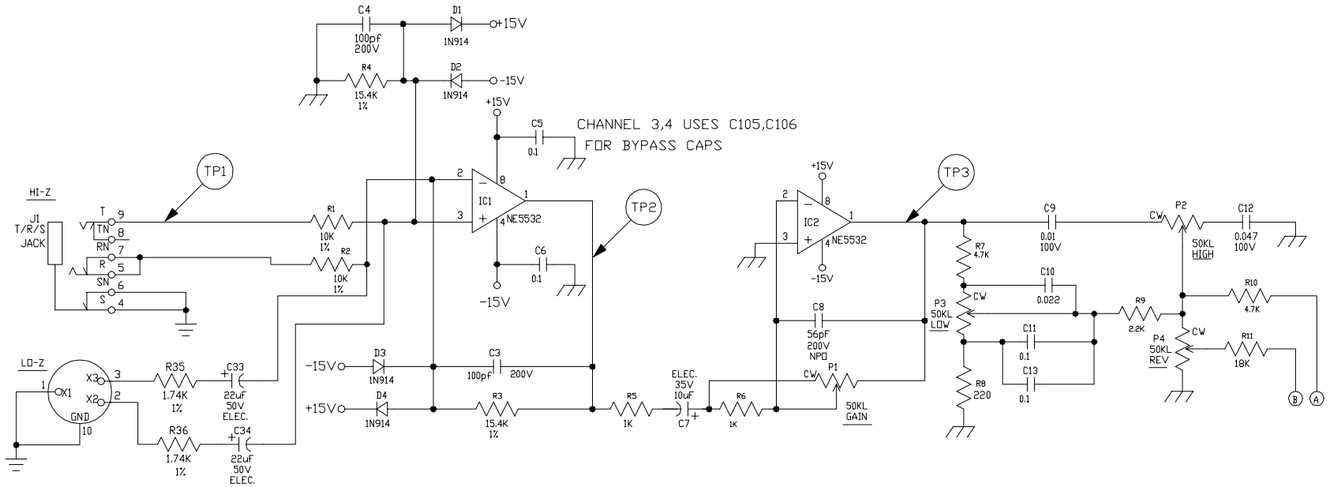

THIS SECTION OF THE SCHEMATIC REFLECTS CHANNEL 1. CHANNELS 2, 3, & 4 ARE THE SAME AS CHANNEL 1 WITH DESIGNATORS INCREMENTED BY 100.

CHANNEL 1 USES IC1-A AND IC2-A
CHANNEL 2 USES IC1-B AND IC2-B
CHANNEL 3 USES IC101-A AND IC102-A
CHANNEL 4 USES IC101-B AND IC102-B

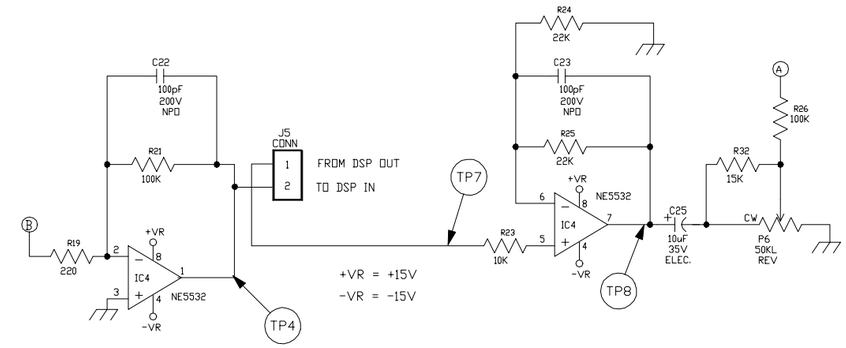

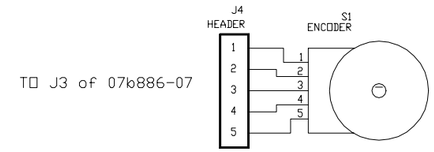

TO J3 of 07b886-07

NOTES

1) CAUTION: SHOCK HAZARD!!
THIS UNIT CONTAINS HAZARDOUS VOLTAGE. DISCONNECT POWER AND BE SURE POWER SUPPLY IS DISCHARGED BEFORE TOUCHING INTERNAL PARTS.
2) UNLESS NOTED, RESISTOR VALUES IN OHMS, 1/4W-5% TOL. CAPACITOR VALUES IN MICROFARADS, 50V-10% TOL.
3) VOLTAGES ARE MEASURED WITH 1 MEGOHM OSCILLOSCOPE AND 10 MEGOHM DIGITAL VOLTMETER.
4) PREAMP GND LED GND CHASSIS GROUND

TEST POINTS	VOLTAGE (rms)	WAVE FORM	VOLTAGE (DC)
1	10mV	∿	—
2	16mV	∿	—
3	.81V	∿	—
4	1V	∿	—
5	1V	∿	—
6	.7V	∿	—
7	.57V	∿	—
8	1.15V	∿	—
9	.2V	∿	—
10	—	—	-15V
11	—	—	+15V

CONDITIONS
1KHz SINE WAVE WITH ALL CONTROLS @ "5" EXCEPT CHANNEL GAIN , REVERB SEND, LEVEL. & REVERB RETURN @ "10"

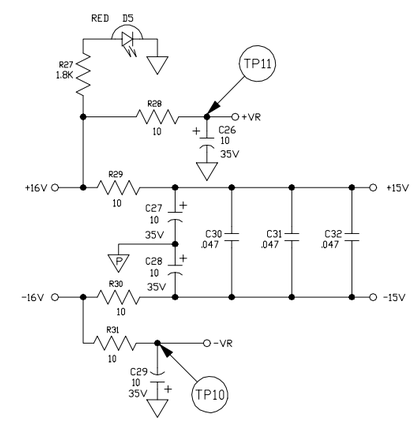

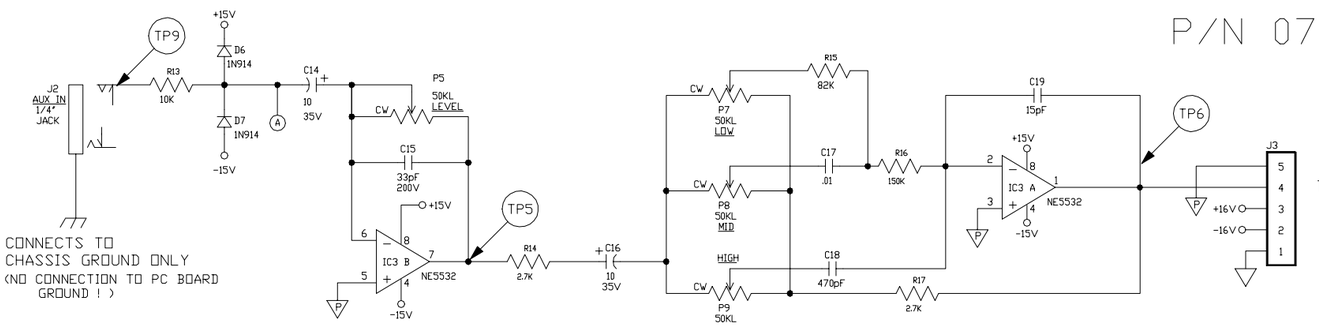

CONNECTS TO CHASSIS GROUND ONLY
(NO CONNECTION TO PC BOARD GROUND !)

TO J1 of 07-481-02

P/N 07-506-01

REV:	DATE:	DESCRIPTION	ECR/ECN NO:	CHNG'D BY:	APPR'D BY:	DATE:
0	6-12-00	CONTROL SSUE				
B	3/23/00	INITIAL ISSUE				

THE INFORMATION CONTAINED ON THIS DRAWING IS PROPRIETARY TO ST. LOUIS MUSIC, INC.

SIGNATURES:		DATE:
DRAWN:	REM	12/22/99
CHK'D:		
RLS'D		

TOLERANCES:

DRAWING SIZE: D
DRAWING TYPE: SCHEMO
CLASS CODE:
SCALE: NONE SHEET: 1 OF 1

SLM Electronics
11880 Borman Dr.
St. Louis, Missouri
63146

FIRST USED ON: PA4FXa

DRAWING TITLE: PWA - BOX MIXER

DRAWING NO.: 07S506-XX