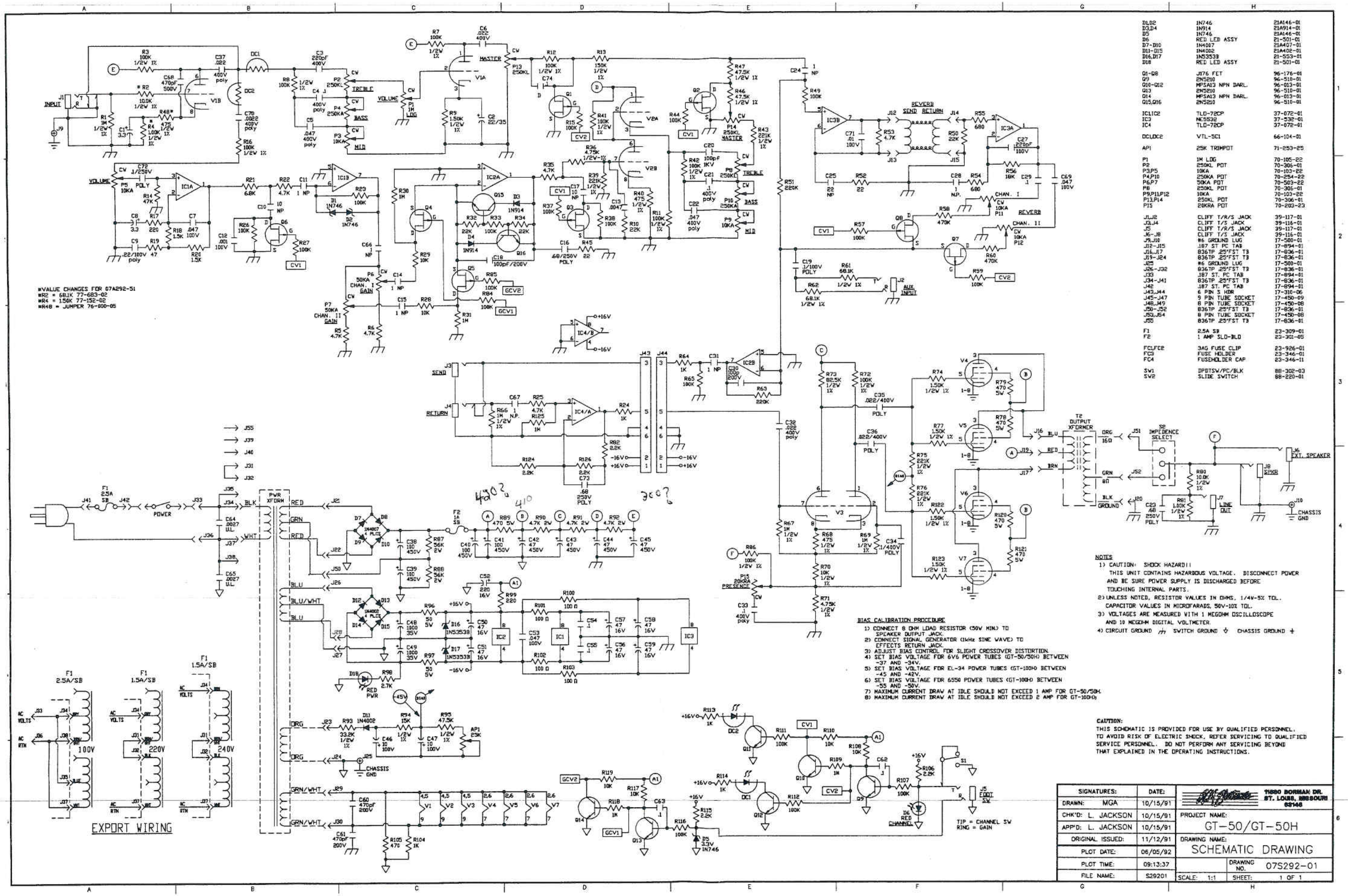

*VALUE CHANGES FOR 07A292-51
*R2 = 68.1K 77-683-02
*R4 = 1.50K 77-152-02
*R48 = JUMPER 76-800-05

D1,D2	1N746	21A146-01
D3,D4	1N914	21A914-01
D5	1N746	21A146-01
D6	RED LED ASSY	21-501-01
D7-D10	1N4007	21A407-01
D11-D15	1N4002	21A402-01
D16,D17	1N5353B	21-553-01
D18	RED LED ASSY	21-501-01
Q1-Q8	J176 FET	96-176-01
Q9	2N5210	96-510-01
Q10-Q12	MPSA13 NPN DARL.	96-013-01
Q13	2N5210	96-510-01
Q14	MPSA13 NPN DARL.	96-013-01
Q15,Q16	2N5210	96-510-01
IC1,IC2	TLO-72CP	37-072-01
IC3	NE5532	37-532-01
IC4	TLO-72CP	37-072-01
DC1,DC2	VTL-5C1	66-104-01
AP1	25K TRIMPOT	71-253-25
P1	1M LOG	70-105-22
P2	250KL POT	70-306-01
P3,P5	10KA	70-103-22
P4,P10	250KA POT	70-254-22
P6,P7	50KA POT	70-503-22
P8	250KL POT	70-306-01
P9,P11,P12	10KA	70-103-22
P13,P14	250KL POT	70-306-01
P15	20KRA POT	70-203-23
J1,J2	CLIFT T/R/S JACK	39-117-01
J3,J4	CLIFT T/S JACK	39-116-01
J5	CLIFT T/R/S JACK	39-117-01
J6-J8	CLIFT T/S JACK	39-116-01
J9,J10	#6 GROUND LUG	17-500-01
J11-J15	.187 ST PC TAB	17-894-01
J16,J17	836TP .25"FST TB	17-836-01
J19-J24	836TP .25"FST TB	17-836-01
J25	#6 GROUND LUG	17-500-01
J26-J32	836TP .25"FST TB	17-836-01
J33	.187 ST. PC TAB	17-894-01
J34-J41	836TP .25"FST TB	17-836-01
J42	.187 ST. PC TAB	17-894-01
J43,J44	6 PIN S HDR	17-310-06
J45-J47	9 PIN TUBE SOCKET	17-450-09
J48,J49	8 PIN TUBE SOCKET	17-450-08
J50-J52	836TP .25"FST TB	17-836-01
J53,J54	8 PIN TUBE SOCKET	17-450-08
J55	836TP .25"FST TB	17-836-01
F1	2.5A SB	23-309-01
F2	1 AMP SLO-BLO	23-301-05
FC1,FC2	3AG FUSE CLIP	23-926-01
FC3	FUSE HOLDER	23-346-01
FC4	FUSEHOLDER CAP	23-346-11
SW1	DPDTSW/PC/BLK	88-302-03
SW2	SLIDE SWITCH	88-220-01

NOTES

1) CAUTION: SHOCK HAZARD!! THIS UNIT CONTAINS HAZARDOUS VOLTAGE. DISCONNECT POWER AND BE SURE POWER SUPPLY IS DISCHARGED BEFORE TOUCHING INTERNAL PARTS.
2) UNLESS NOTED, RESISTOR VALUES IN OHMS, 1/4W-5% TOL. CAPACITOR VALUES IN MICROFARADS, 50V-10% TOL.
3) VOLTAGES ARE MEASURED WITH 1 MEGOHM OSCILLOSCOPE AND 10 MEGOHM DIGITAL VOLTMETER.
4) CIRCUIT GROUND ⏚ SWITCH GROUND ⏚ CHASSIS GROUND ⏚

BIAS CALIBRATION PROCEDURE

1) CONNECT 8 OHM LOAD RESISTOR (50W MIN.) TO SPEAKER OUTPUT JACK.
2) CONNECT SIGNAL GENERATOR (1kHz SINE WAVE) TO EFFECTS RETURN JACK.
3) ADJUST BIAS CONTROL FOR SLIGHT CROSSOVER DISTORTION.
4) SET BIAS VOLTAGE FOR 6V6 POWER TUBES (GT-50/50H) BETWEEN -37 AND -34V.
5) SET BIAS VOLTAGE FOR EL-34 POWER TUBES (GT-100H) BETWEEN -45 AND -42V.
6) SET BIAS VOLTAGE FOR 6550 POWER TUBES (GT-100H) BETWEEN -55 AND -50V.
7) MAXIMUM CURRENT DRAW AT IDLE SHOULD NOT EXCEED 1 AMP FOR GT-50/50H.
8) MAXIMUM CURRENT DRAW AT IDLE SHOULD NOT EXCEED 2 AMP FOR GT-100H.

CAUTION:
THIS SCHEMATIC IS PROVIDED FOR USE BY QUALIFIED PERSONNEL. TO AVOID RISK OF ELECTRIC SHOCK, REFER SERVICING TO QUALIFIED SERVICE PERSONNEL. DO NOT PERFORM ANY SERVICING BEYOND THAT EXPLAINED IN THE OPERATING INSTRUCTIONS.

SIGNATURES:		DATE:
DRAWN:	MGA	10/15/91
CHK'D:	L. JACKSON	10/15/91
APP'D:	L. JACKSON	10/15/91
ORIGINAL ISSUED:		11/12/91
PLOT DATE:		06/05/92
PLOT TIME:		09:13:37
FILE NAME:		S29201

11680 BORMAN DR.
ST. LOUIS, MISSOURI
63146

PROJECT NAME: GT-50/GT-50H

DRAWING NAME: SCHEMATIC DRAWING

DRAWING NO. 07S292-01

SCALE: 1:1 SHEET: 1 OF 1

NOTE *
(SEE SHT. 2) PARTS LIST

AS SHOWN GT-50 PICTORIAL	R48 BECOMES JW45. R2 FROM 10K TO 68K, 1K, R4 FROM 1K TO 1.5K GT-50H PICTORIAL

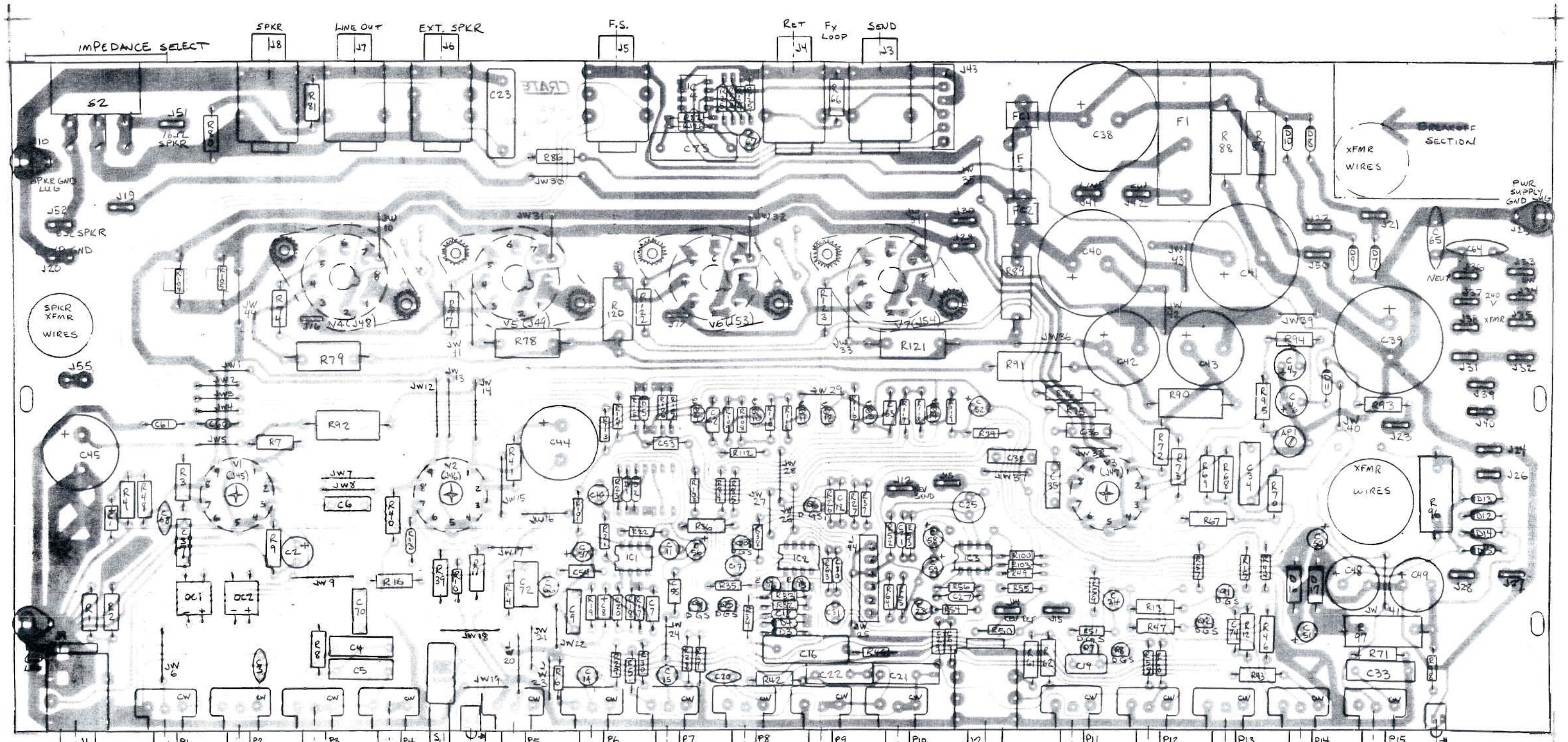

REV 3 MOVED J16 & J17

REV 2: ART to REV "3" - ADDED JW44, DELETED 4 SPACERS UNDER R104 + R105

REV 1: ART to REV "2" - CAN BE ASSY 50, 50H, 100H

TOLERANCES (EXCEPT AS NOTED)	REVISIONS NO	DATE	BY	GT-50 PICTORIAL GT-50H "	SHT 1 OF 2
DECIMAL ±	1	12-20-91	RJM	SLM ELECTRONICS 63133	
FRACTIONAL ±	0	4-22-92	D.H.	1400 SERGUSON AVE ST. LOUIS	
ANGULAR ±	3	6/19/92	SWR	DRAWN RJM SCALE 2x	MATERIAL
	4			CHK'D DATE 10-9-91	DRAWING NO 07P29251
	5			TRACED APP'D	