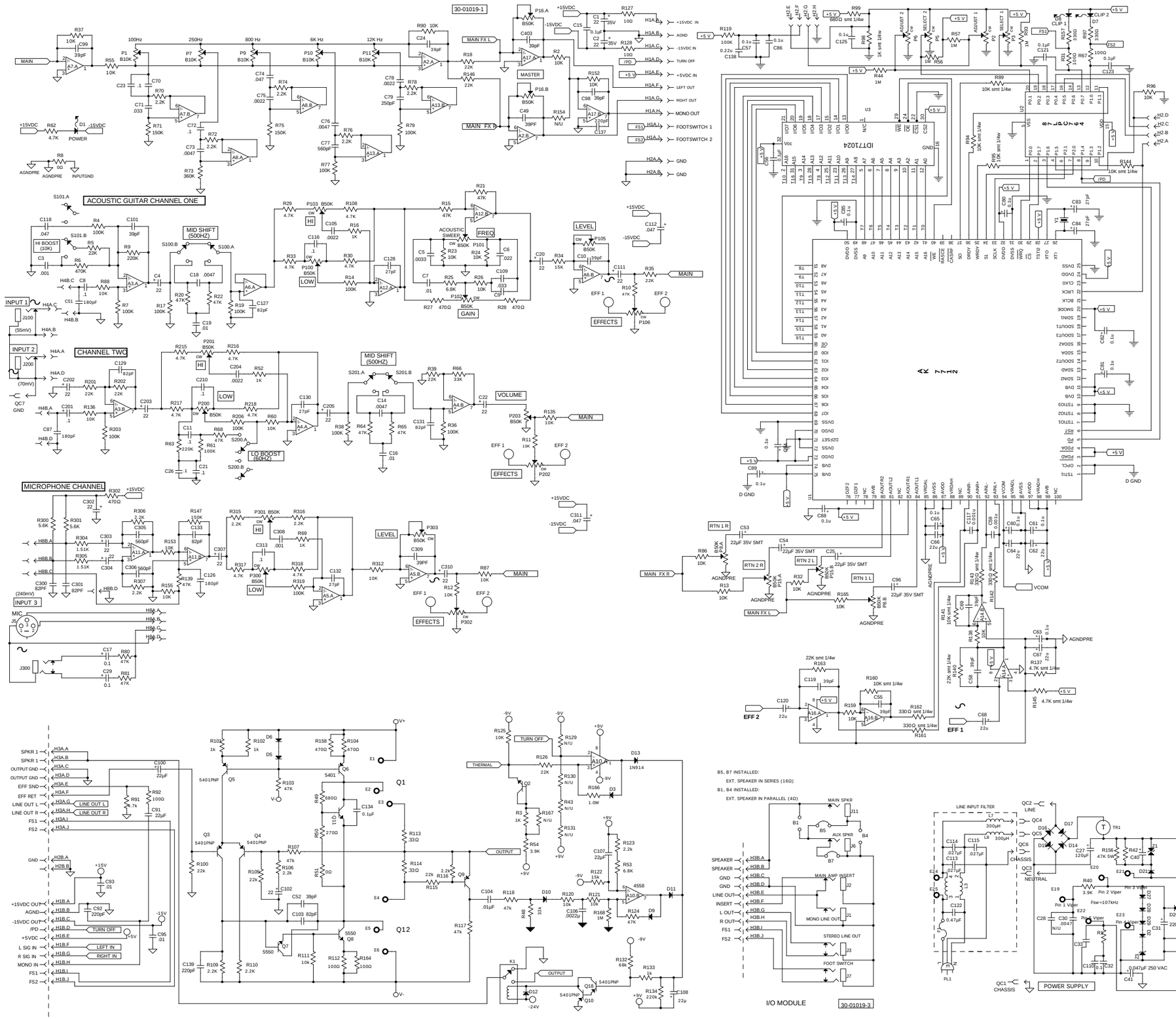

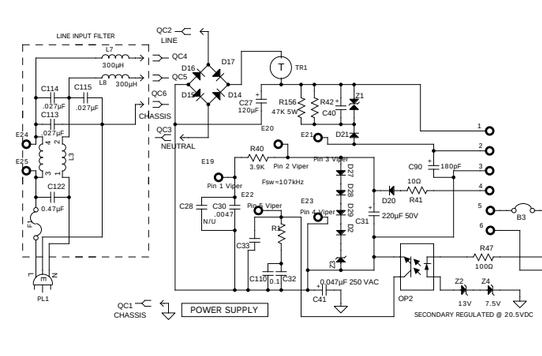

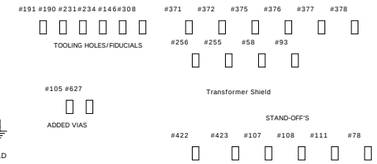

6. LABEL "B" INDICATES A JUMPER WIRE.
5. ALL OP AMPS ARE TYPE 4558, EXCEPT AS NOTED.
4. ALL RESISTORS IN OHMS.
3. ALL CAPACITORS IN MICROFARADS, EXCEPT AS NOTED.
2. ALL DIODES ARE TYPE 1N914, EXCEPT AS NOTED
1. ALL GROUNDS ARE A EXCEPT AS NOTED.

NOTES UNLESS OTHERWISE SPECIFIED

CARVIN
12340 World Trade Drive
San Diego, CA 92128
(858) 487-1600
FAX 487-6629

AG100D
SYSTEM MASTER

DRAWN BY:	M. OTAVKA	DATE:	24MAY01
APPROVED:		DATE:	
PCB NO:	30- 01019	REV:	I
ASSY. NO:	80- 01019	REV:	K
REVISED BY:		DATE:	

CHANGES FROM REV J:

1. ADDED R168