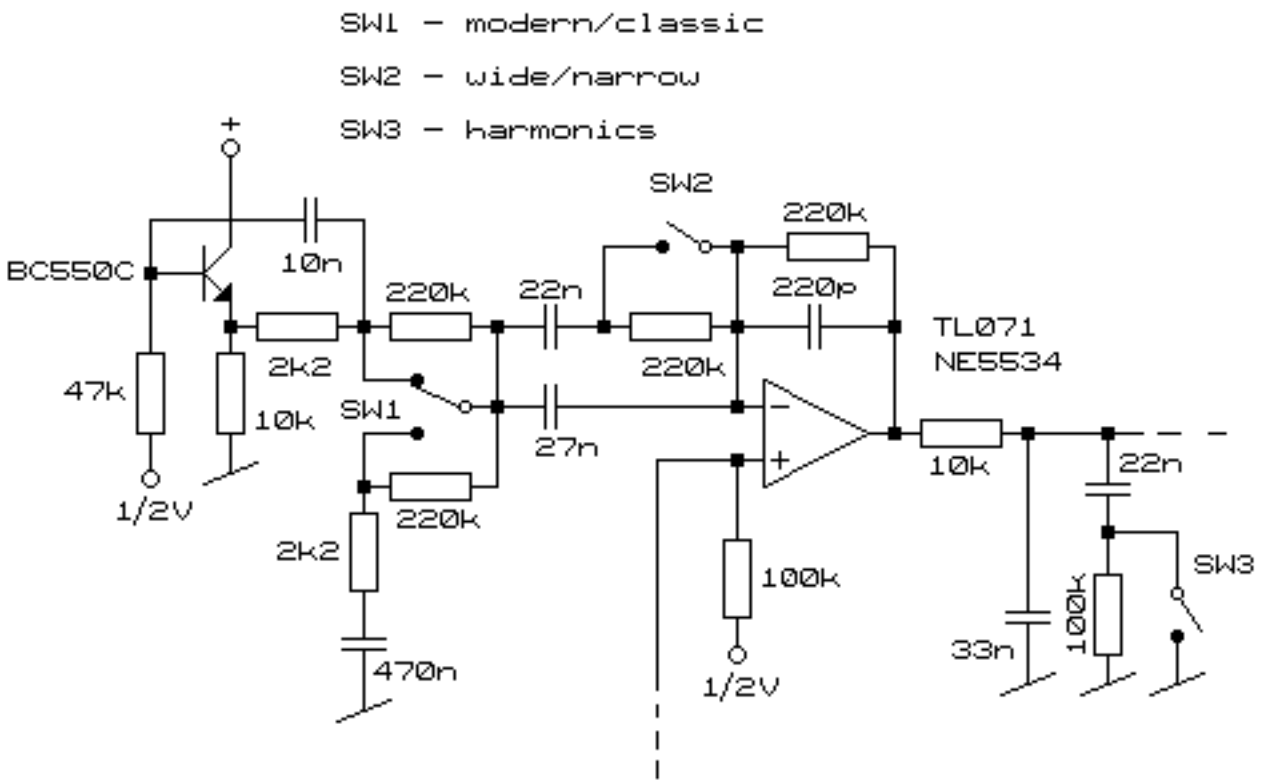
SW1 - modern/classic
SW2 - wide/narrow
SW3 - harmonics
+
BC550C
10n
47k
10k
1/2V
2k2
220k
22n
SW1
27n
220k
2k2
470n
SW2
220k
220p
220k
TL071
NE5534
100k
1/2V
10k
22n
33n
100k
SW3

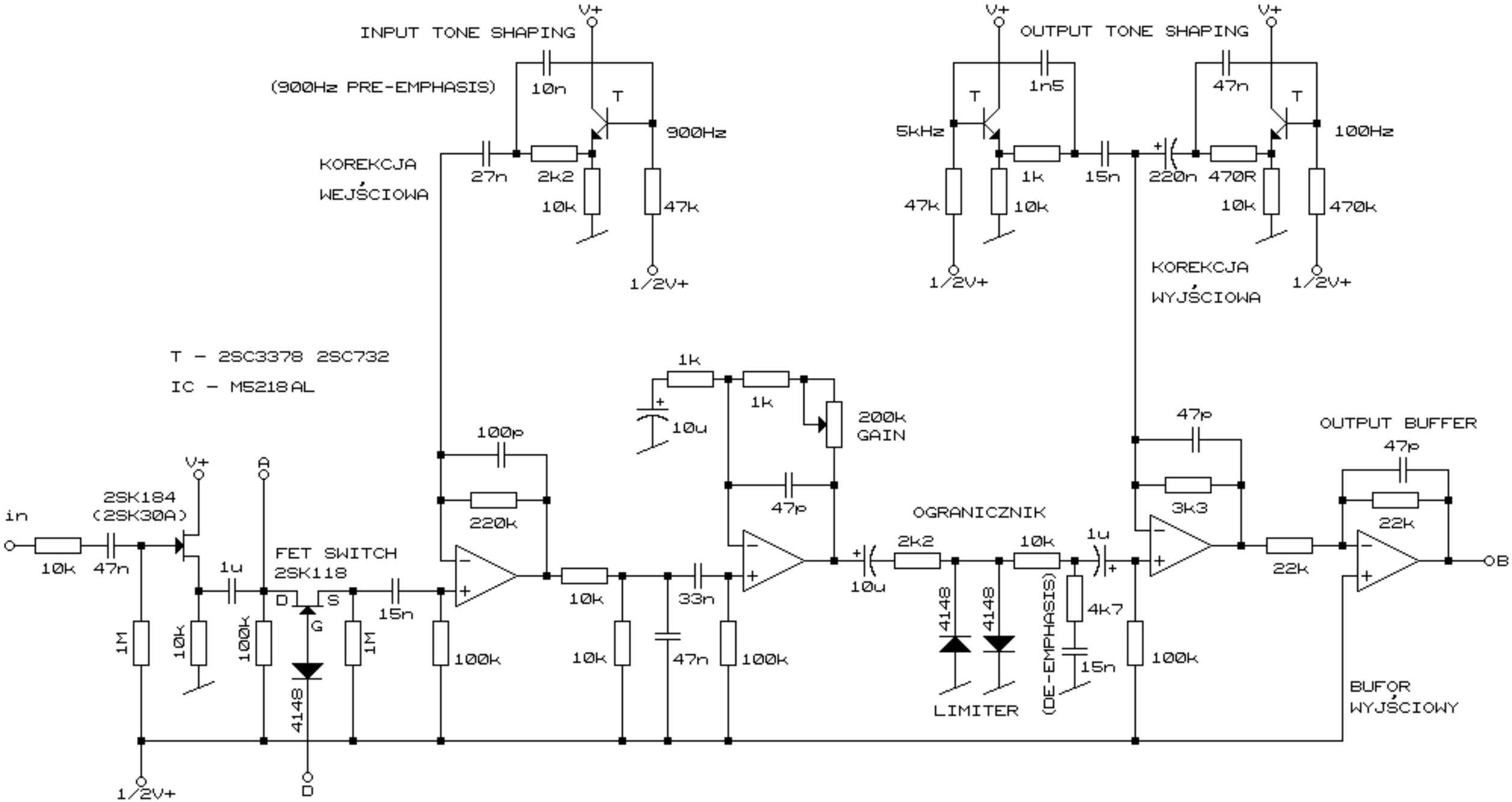
INPUT TONE SHAPING
(900Hz PRE-EMPHASIS)
V+
10n
T
900Hz
KOREKCJA
WEJŚCIOWA
27n
2k2
10k
47k
1/2V+
OUTPUT TONE SHAPING
1n5
47n
5kHz
100Hz
1k
15n
220n
470R
470k
KOREKCJA
WYJŚCIOWA
T - 2SC3378 2SC732
IC - M5218AL
1k
10u
200k
GAIN
100p
220k
47p
3k3
22k
OUTPUT BUFFER
in
2SK184
(2SK30A)
10k
47n
1u
FET SWITCH
2SK118
D
S
G
15n
1M
100k
4148
33n
OGRANICZNIK
2k2
10k
4k7
(DE-EMPHASIS)
LIMITER
BUFOR
WYJŚCIOWY
B
D

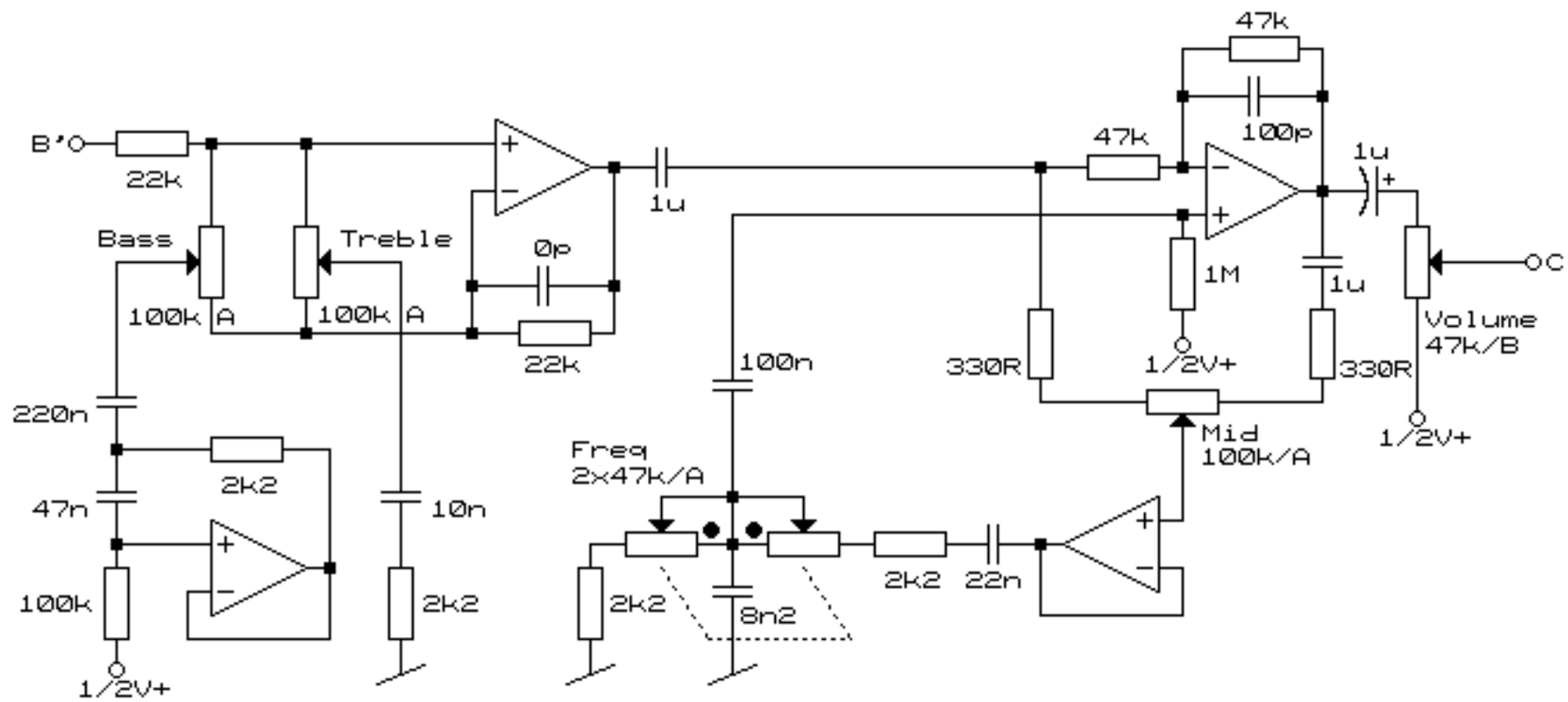
B'
22k
Bass
100k
A
Treble
100k
A
0p
22k
1u
220n
2k2
47n
100k
1/2V+
100n
10n
2k2
Freq
2x47k/A
2k2
8n2
2k2
22n
Mid
100k/A
330R
1/2V+
1M
47k
100p
47k
1u
1u
330R
Volume
47k/B
C
1/2V+

FET SWITCH

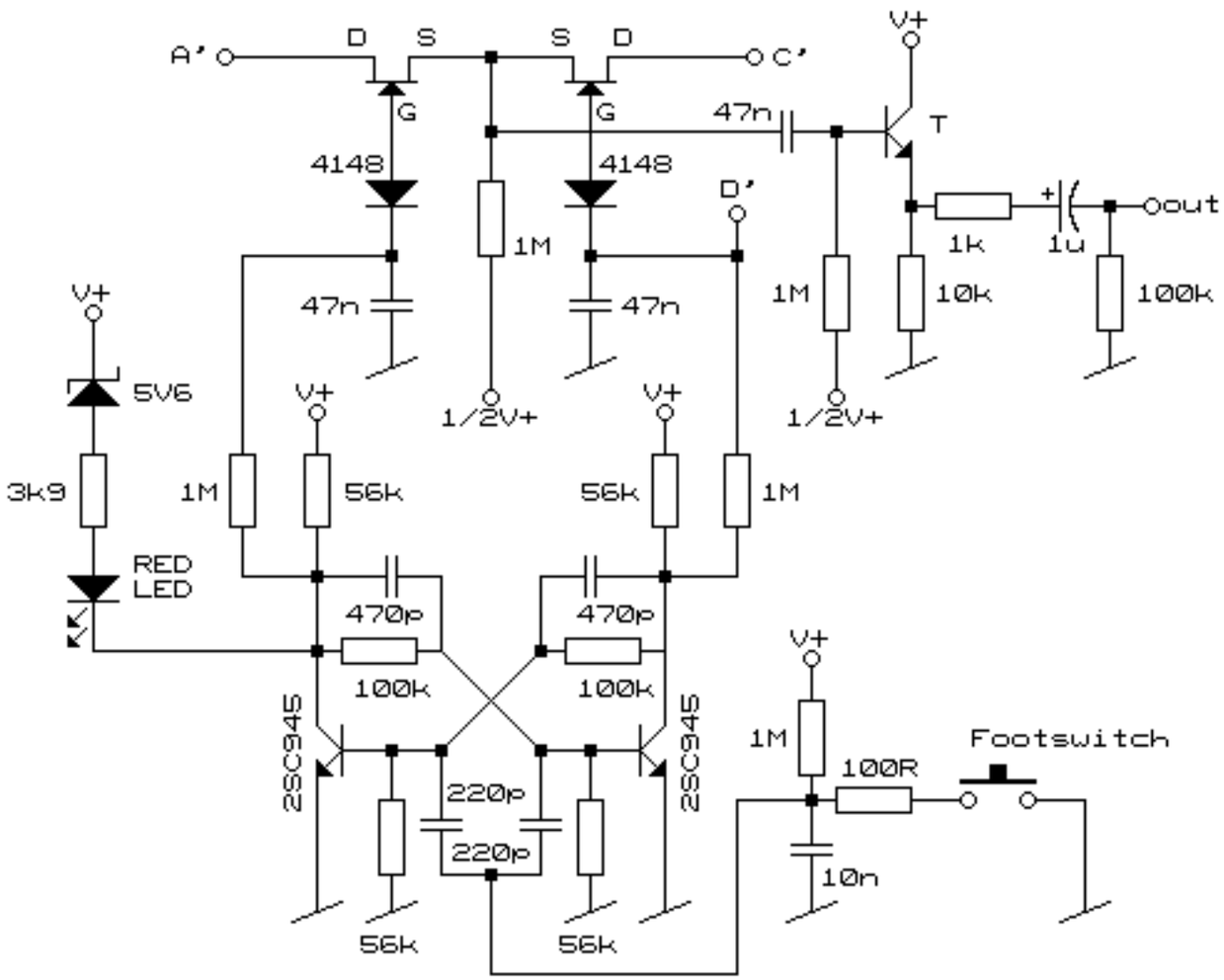
A'
D
S
S
D
C'
G
G
4148
4148
47n
T
V+
D'
1M
1k
1u
out
47n
47n
1M
10k
100k
1/2V+
1/2V+
V+
5V6
3k9
RED
LED
1M
56k
56k
1M
470p
470p
100k
100k
2SC945
2SC945
220p
220p
56k
56k
1M
100R
Footswitch
10n

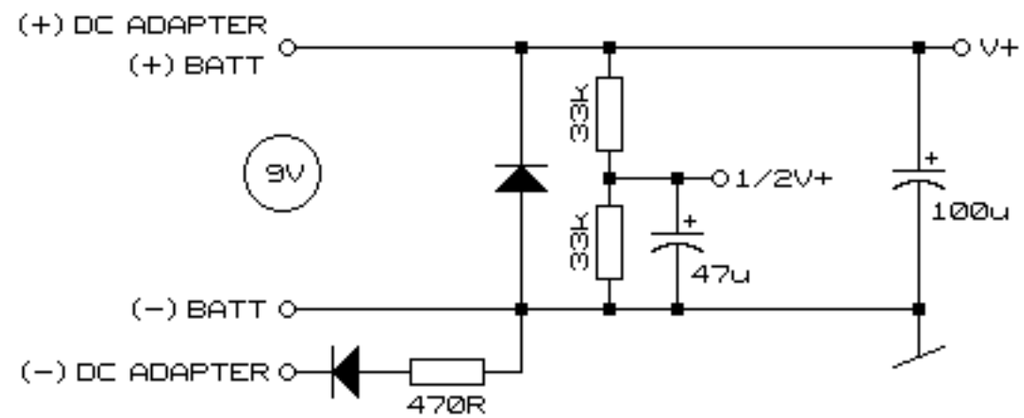
(+) DC ADAPTER
(+) BATT
V+
9V
33k
1/2V+
100u
33k
47u
(-) BATT
(-) DC ADAPTER
470R