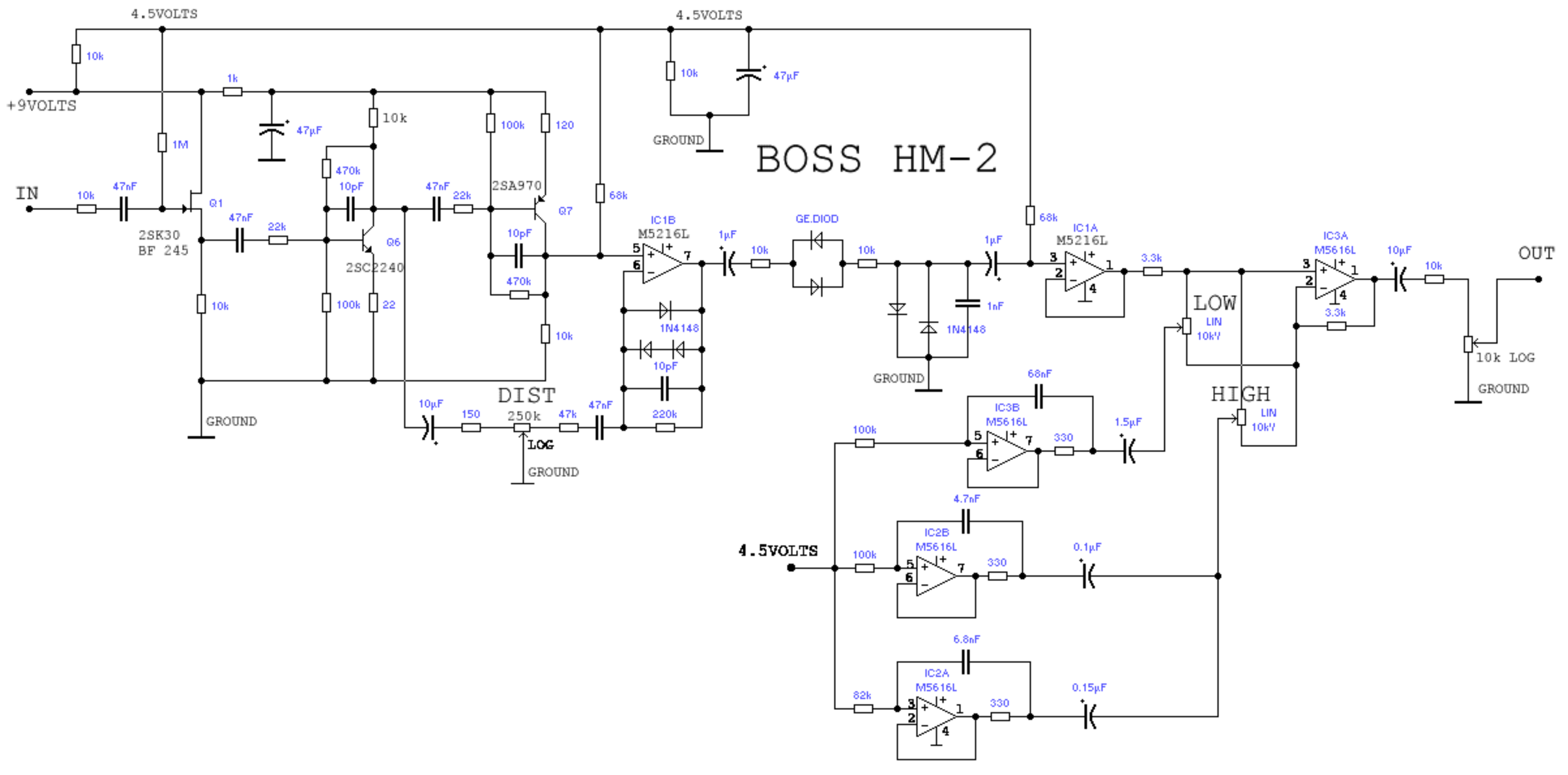
BOSS HM-2
4.5VOLTS
+9VOLTS
IN
OUT
GROUND
10k
1k
1M
47µF
47nF
22k
470k
10pF
100k
120
68k
150
250k
LOG
47k
220k
22
2SK30
BF 245
Q1
2SC2240
Q6
2SA970
Q7
DIST
IC1B
M5216L
IC1A
M5216L
IC3A
M5616L
IC3B
M5616L
IC2B
M5616L
IC2A
M5616L
1µF
10µF
GE.DIOD
1N4148
1nF
3.3k
LOW
HIGH
LIN
10k'V
10k LOG
68nF
1.5µF
330
4.7nF
0.1µF
6.8nF
0.15µF
82k