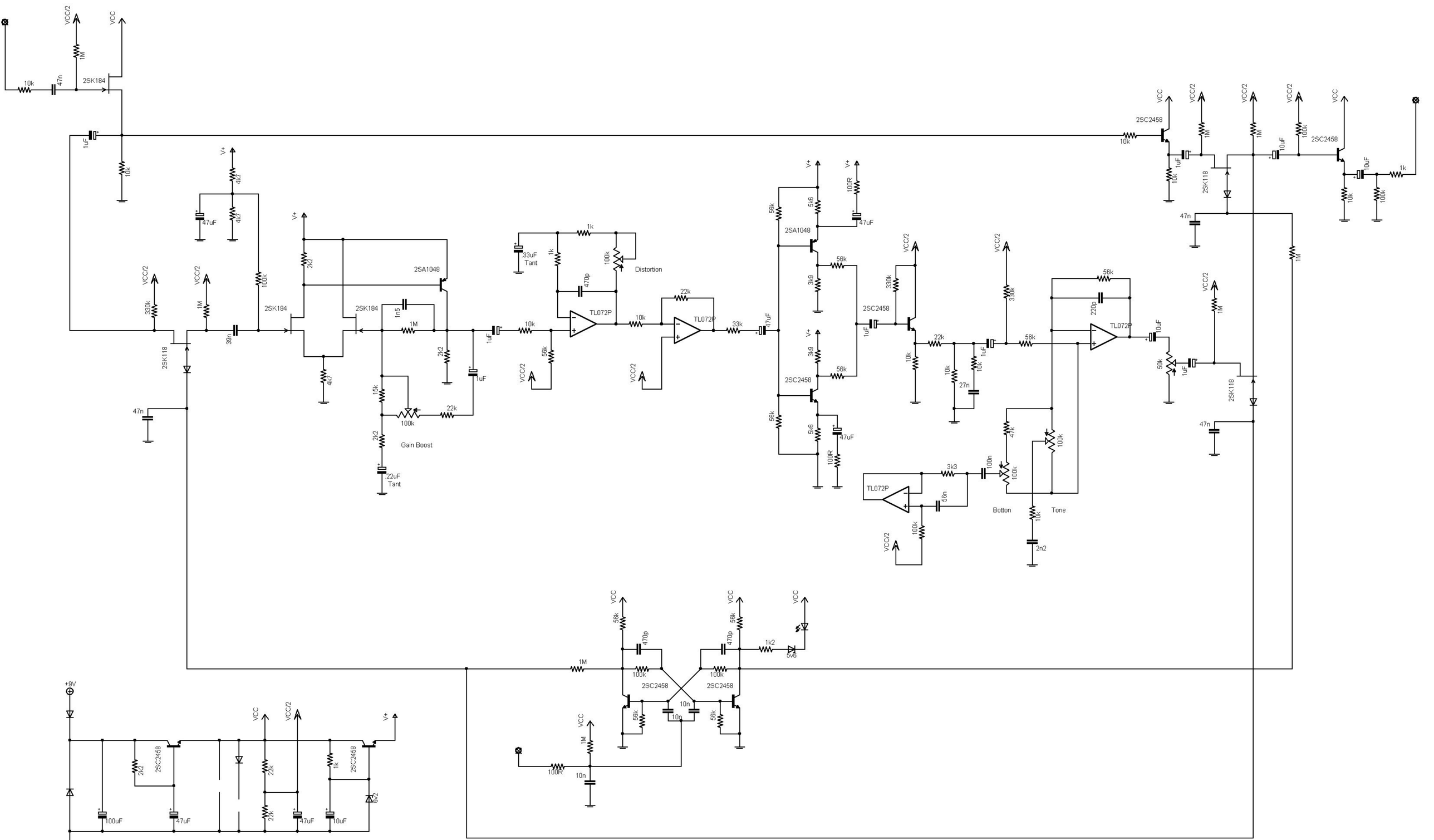
VCC/2
VCC
1M
10k
47n
2SK184
1uF
10k
V+
4k7
47uF
4k7
100k
VCC/2
330k
VCC/2
1M
39n
2SK118
47n
V+
2k2
2SA1048
2SK184
2SK184
1n5
1M
2k2
4k7
1uF
15k
100k
22k
2k2
Gain Boost
.22uF
Tant
33uF
Tant
1k
1k
470p
100k
Distortion
TL072P
10k
56k
VCC/2
22k
TL072P
VCC/2
33k
47uF
10k
56k
5k6
100R
47uF
2SA1048
56k
3k9
3k9
56k
2SC2458
5k6
47uF
100R
330k
VCC/2
2SC2458
1uF
22k
10k
10k
27n
1uF
10k
VCC/2
330k
56k
220p
56k
TL072P
10uF
50k
1uF
VCC/2
1M
2SK118
47n
47k
100k
3k3
100n
100k
TL072P
56n
Botton
Tone
10k
2n2
100k
VCC/2
VCC
2SC2458
10k
1uF
2SC2458
10uF
100k
2SC2458
10uF
1k
10k
100k
2SK118
47n
1M
VCC
56k
470p
1M
100k
2SC2458
10n
10n
56k
VCC
56k
470p
100k
2SC2458
1k2
5v6
VCC
1M
100R
10n
+9V
2k2
2SC2458
100uF
47uF
VCC
22k
22k
VCC/2
47uF
1k
2SC2458
10uF
6v2
V+