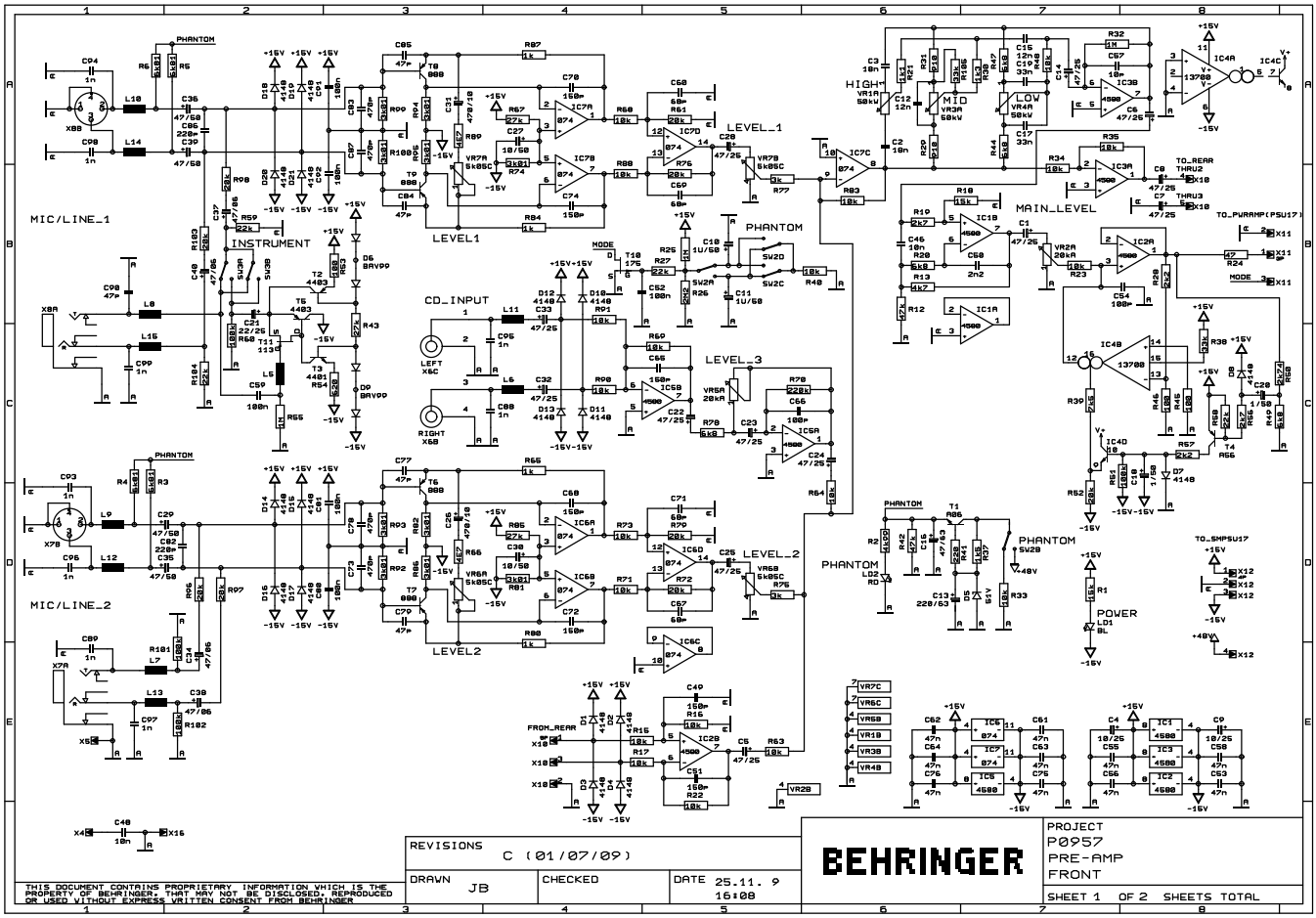
MIC/LINE_1
MIC/LINE_2
INSTRUMENT
CD_INPUT
LEFT X6C
RIGHT X6B
LEVEL1
LEVEL2
LEVEL_1
LEVEL_2
LEVEL_3
HIGH
MID
LOW
MAIN_LEVEL
PHANTOM
POWER
FROM_REAR
TO_REAR THRU2
TO_PVRAMP(PSU17)
TO_SMPSU17
REVISIONS
C (01/07/09)
DRAWN JB
CHECKED
DATE 25.11. 9 16:08
BEHRINGER
PROJECT P0957 PRE-AMP FRONT
SHEET 1 OF 2 SHEETS TOTAL
THIS DOCUMENT CONTAINS PROPRIETARY INFORMATION WHICH IS THE PROPERTY OF BEHRINGER, THAT MAY NOT BE DISCLOSED, REPRODUCED OR USED WITHOUT EXPRESS WRITTEN CONSENT FROM BEHRINGER

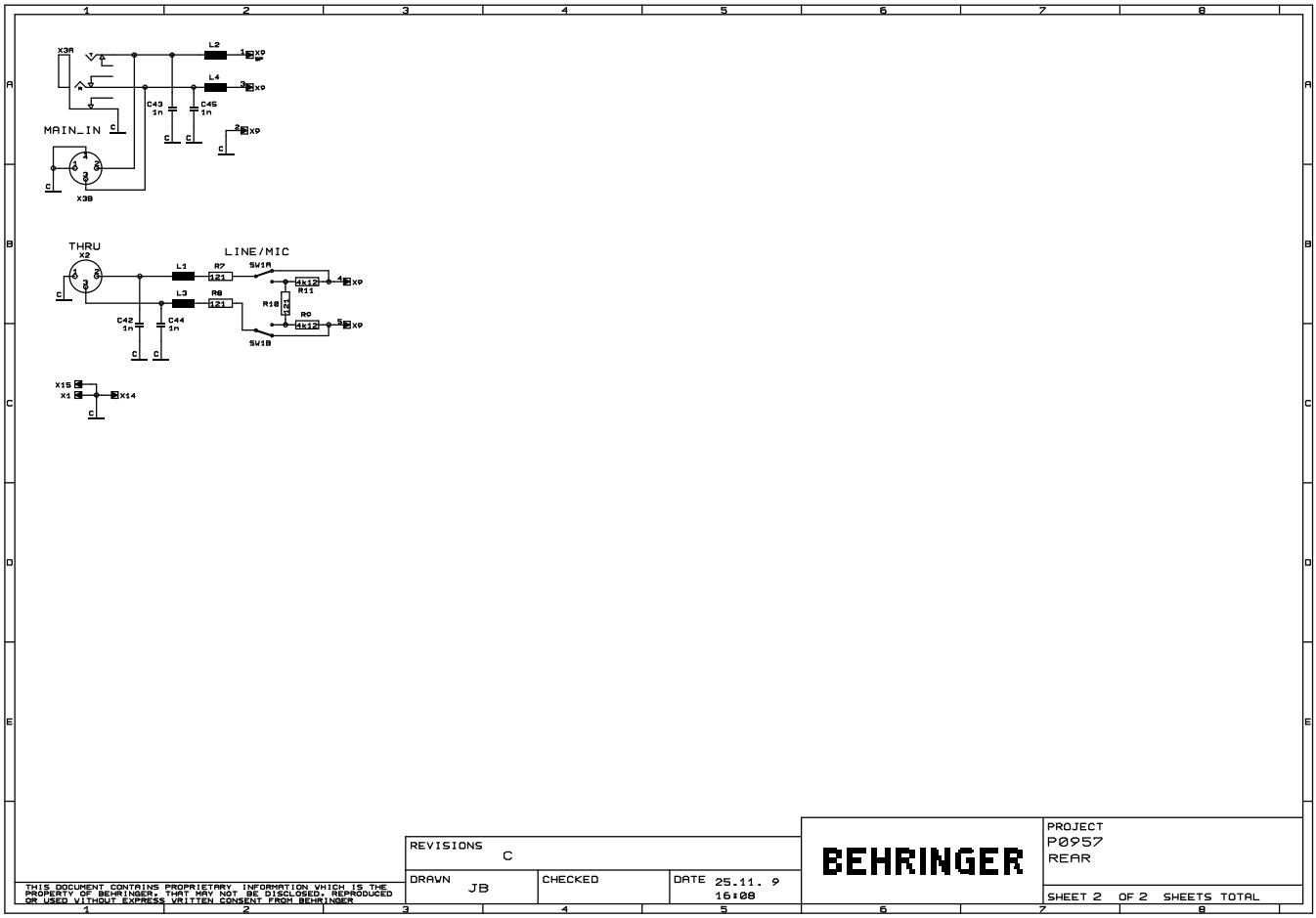
X3A
L2
L4
C43
1n
C45
1n
MAIN_IN
X3B
THRU
X2
LINE/MIC
L1
L3
R7
R8
121
SW1A
SW1B
R10
R9
4k12
R11
C42
1n
C44
1n
X15
X3
X14
REVISIONS
C
DRAWN
JB
CHECKED
DATE
25.11. 9
16:08
BEHRINGER
PROJECT
P0957
REAR
SHEET 2 OF 2 SHEETS TOTAL
THIS DOCUMENT CONTAINS PROPRIETARY INFORMATION WHICH IS THE PROPERTY OF BEHRINGER, THAT MAY NOT BE DISCLOSED, REPRODUCED OR USED WITHOUT EXPRESS WRITTEN CONSENT FROM BEHRINGER

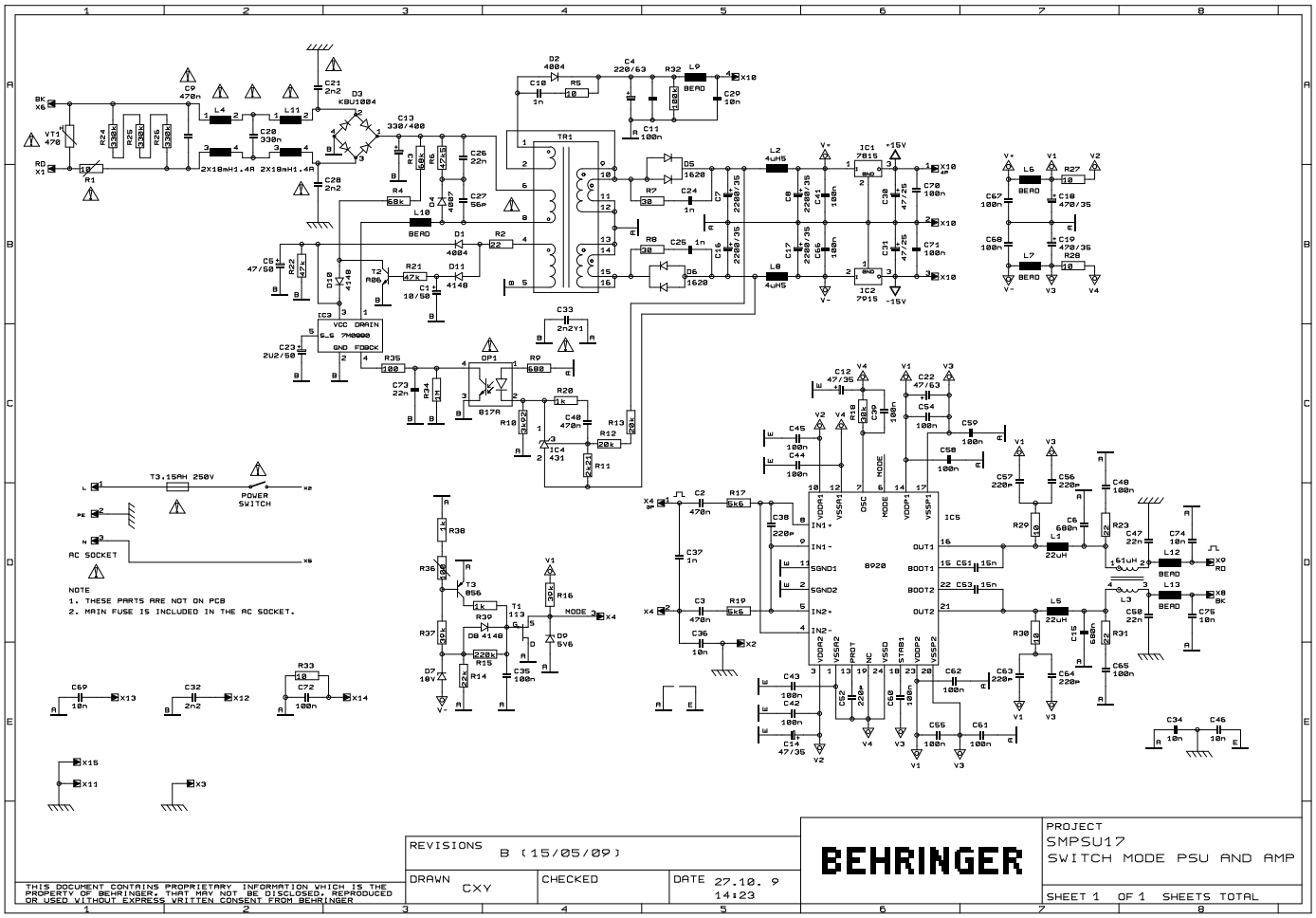
T3.15AH 250V
POWER SWITCH
AC SOCKET
NOTE
1. THESE PARTS ARE NOT ON PCB
2. MAIN FUSE IS INCLUDED IN THE AC SOCKET.
REVISIONS B (15/05/09)
DRAWN CXY
CHECKED
DATE 27.10. 9 14:23
THIS DOCUMENT CONTAINS PROPRIETARY INFORMATION WHICH IS THE PROPERTY OF BEHRINGER. THAT MAY NOT BE DISCLOSED, REPRODUCED OR USED WITHOUT EXPRESS WRITTEN CONSENT FROM BEHRINGER
BEHRINGER
PROJECT
SMPSU17
SWITCH MODE PSU AND AMP
SHEET 1 OF 1 SHEETS TOTAL