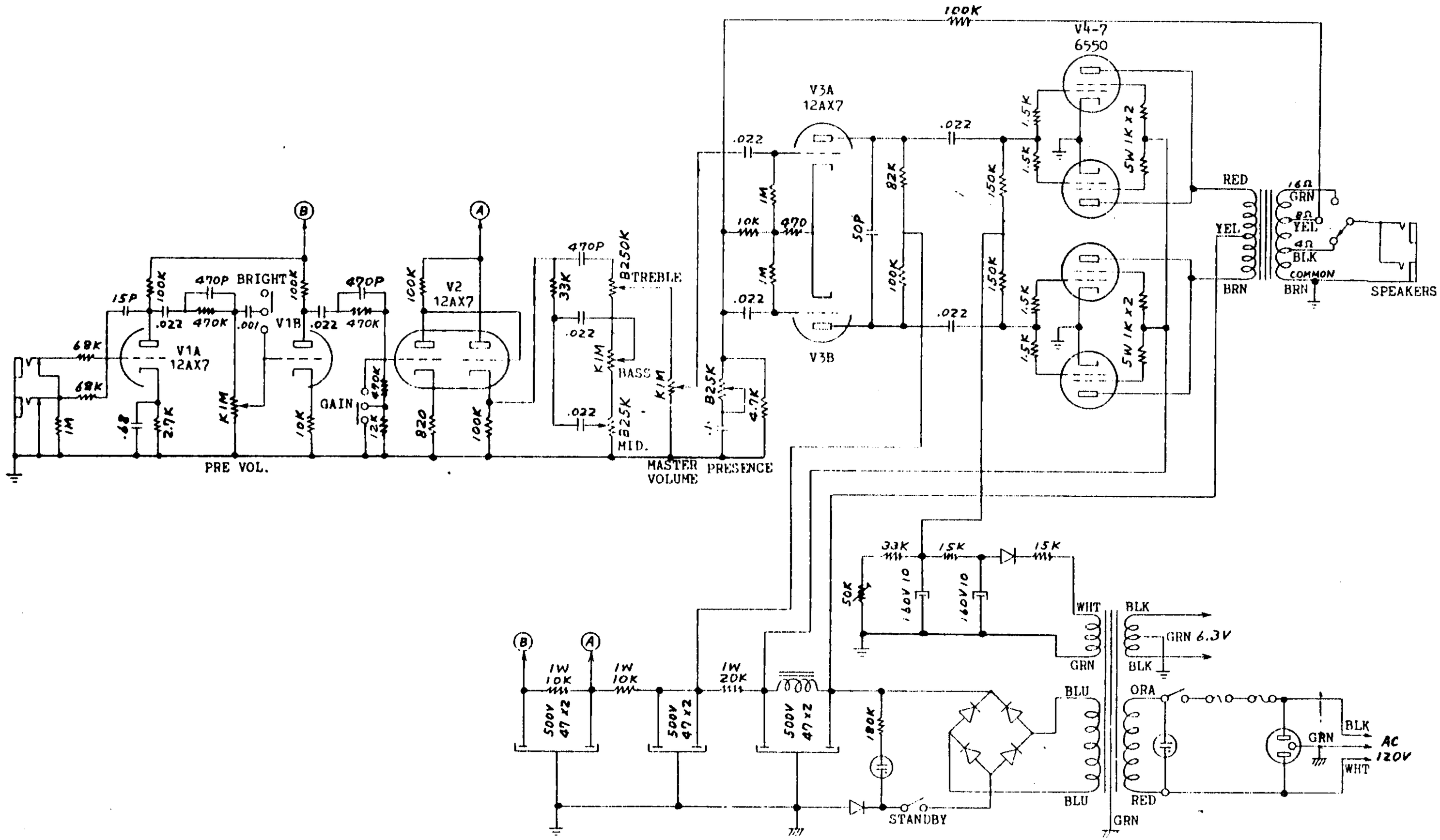

MODEL V5

ampeg

the legend begins again

Ampeg, 105 Fifth Ave., Garden City Park, N.Y. 11040