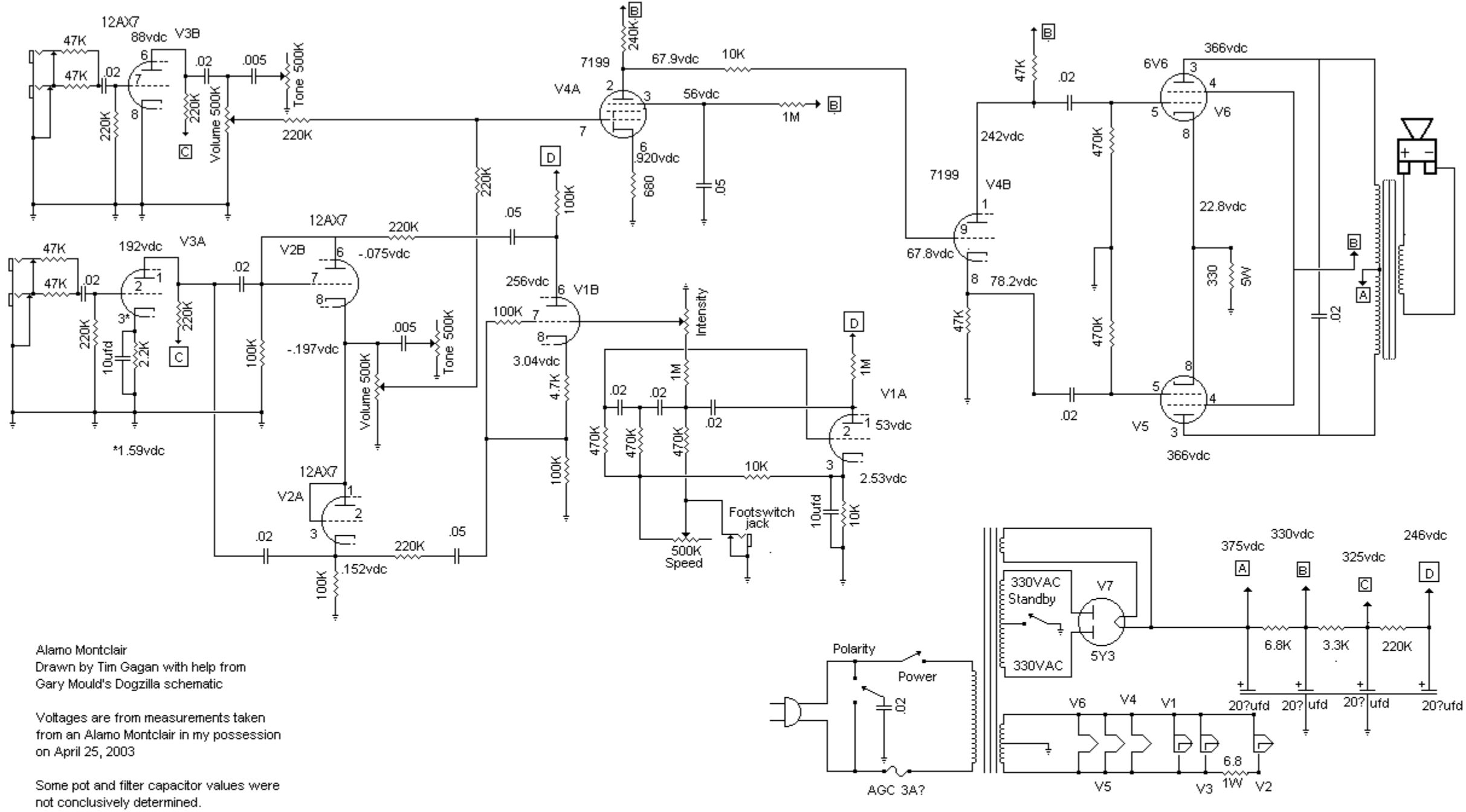

Alamo Montclair
Drawn by Tim Gagan with help from
Gary Mould's Dogzilla schematic

Voltages are from measurements taken
from an Alamo Montclair in my possession
on April 25, 2003

Some pot and filter capacitor values were
not conclusively determined.