Downloaded by
Amateur Radio Directory

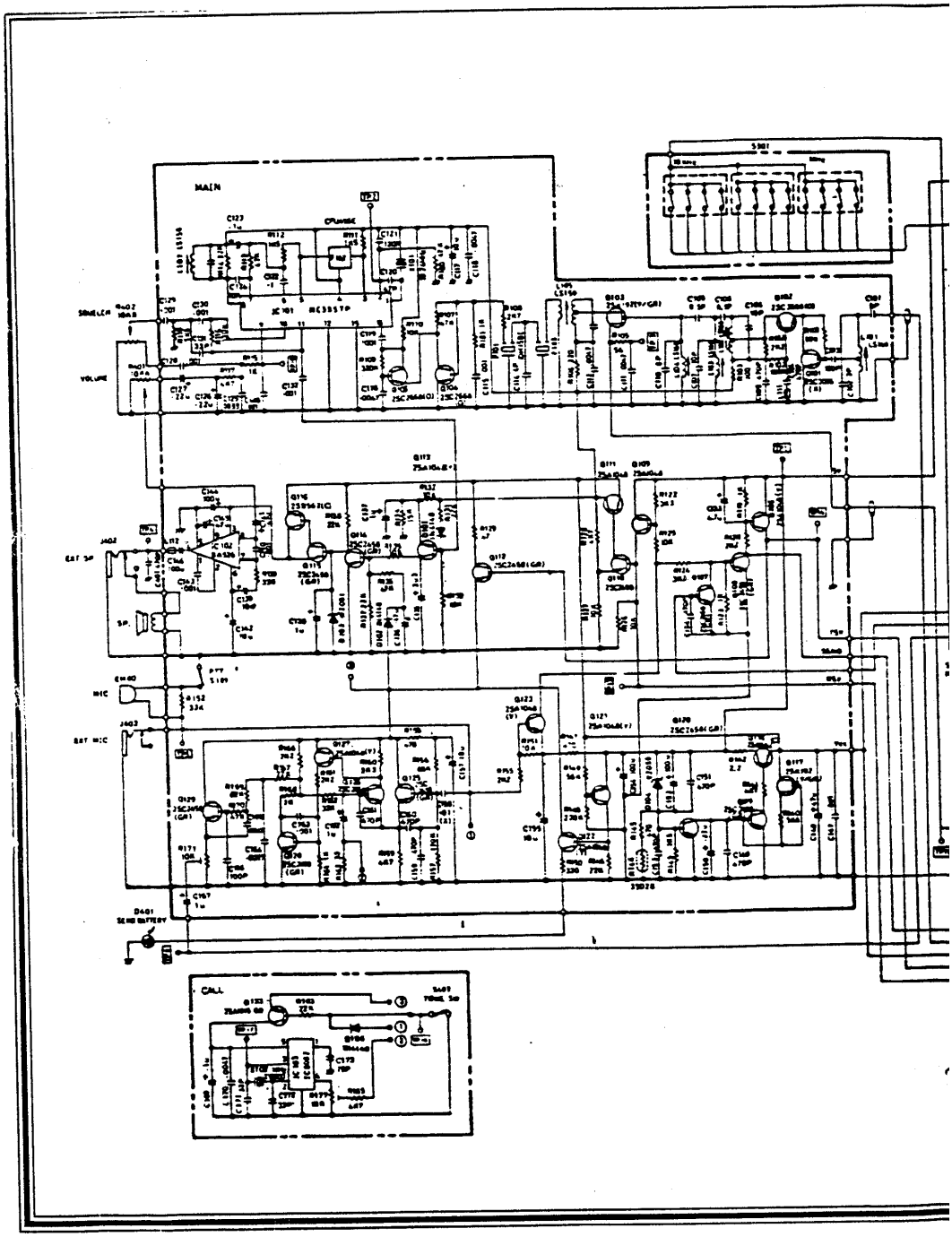

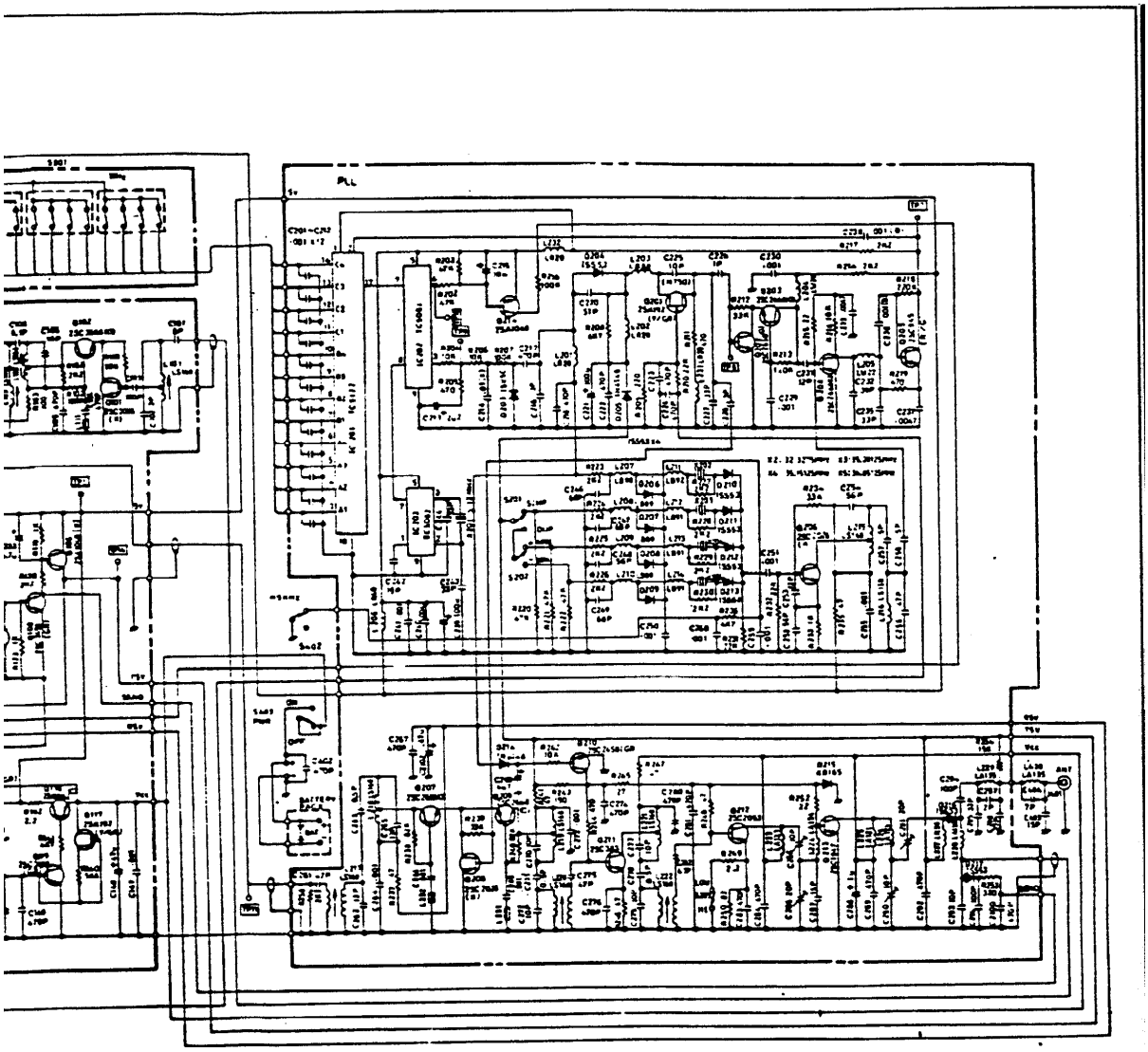

CT 1600

SCHEMA A BLOCCHI