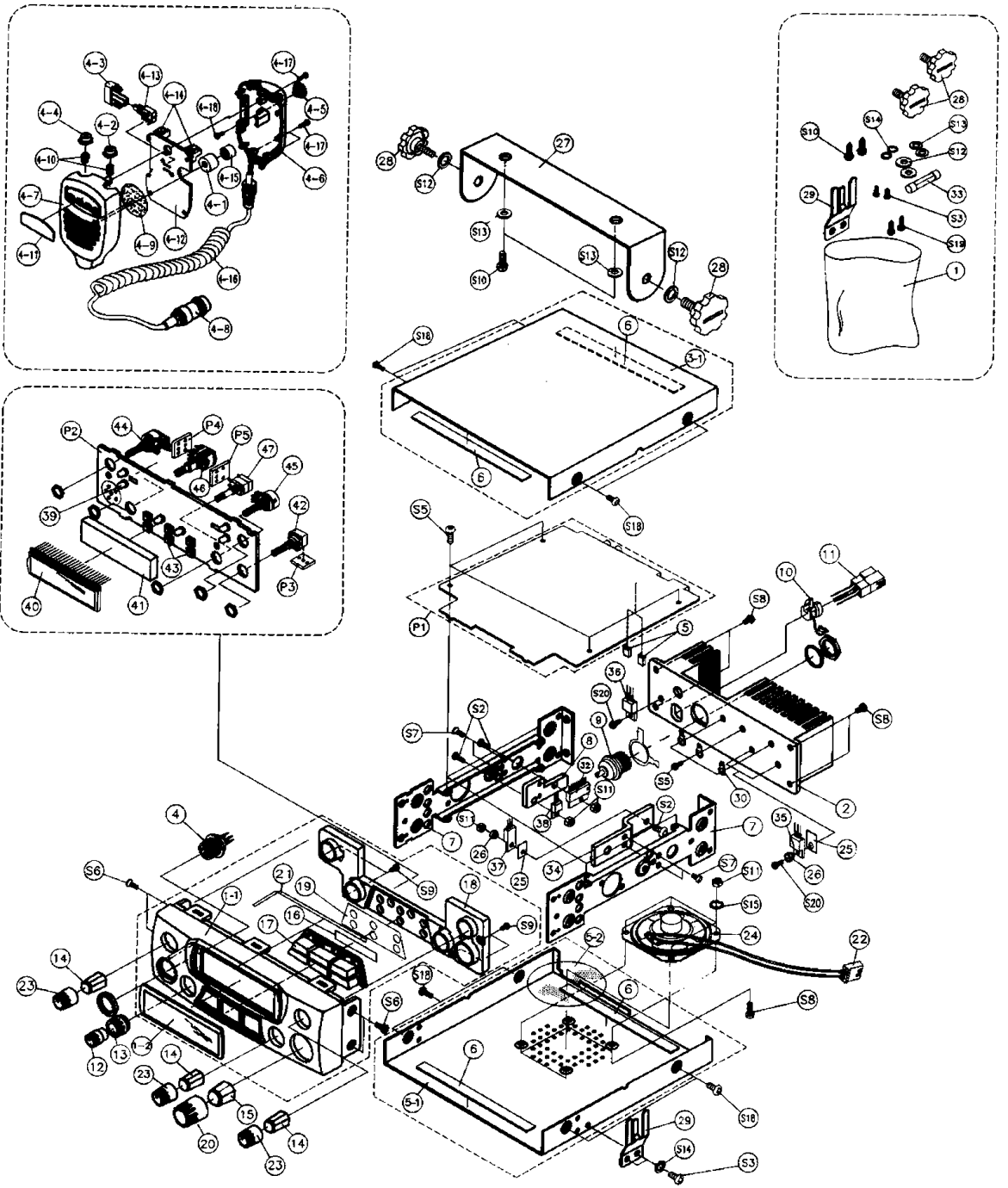MODEL HTX-10
10 METER TRANSCEIVER
EXPLODED VIEW (190-1110)
FAXBACK DOC # 25247