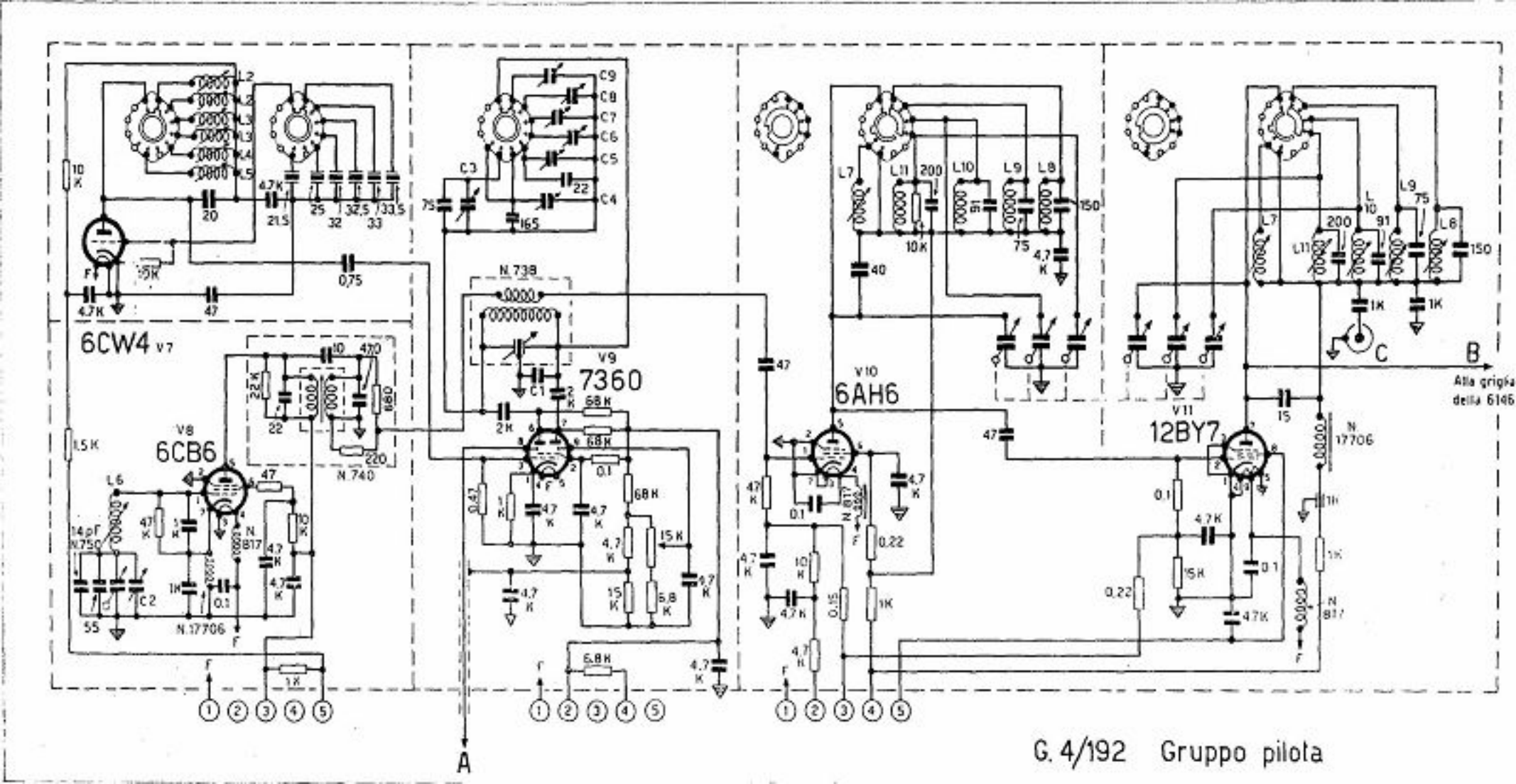

G. 4/192 Gruppo pilota

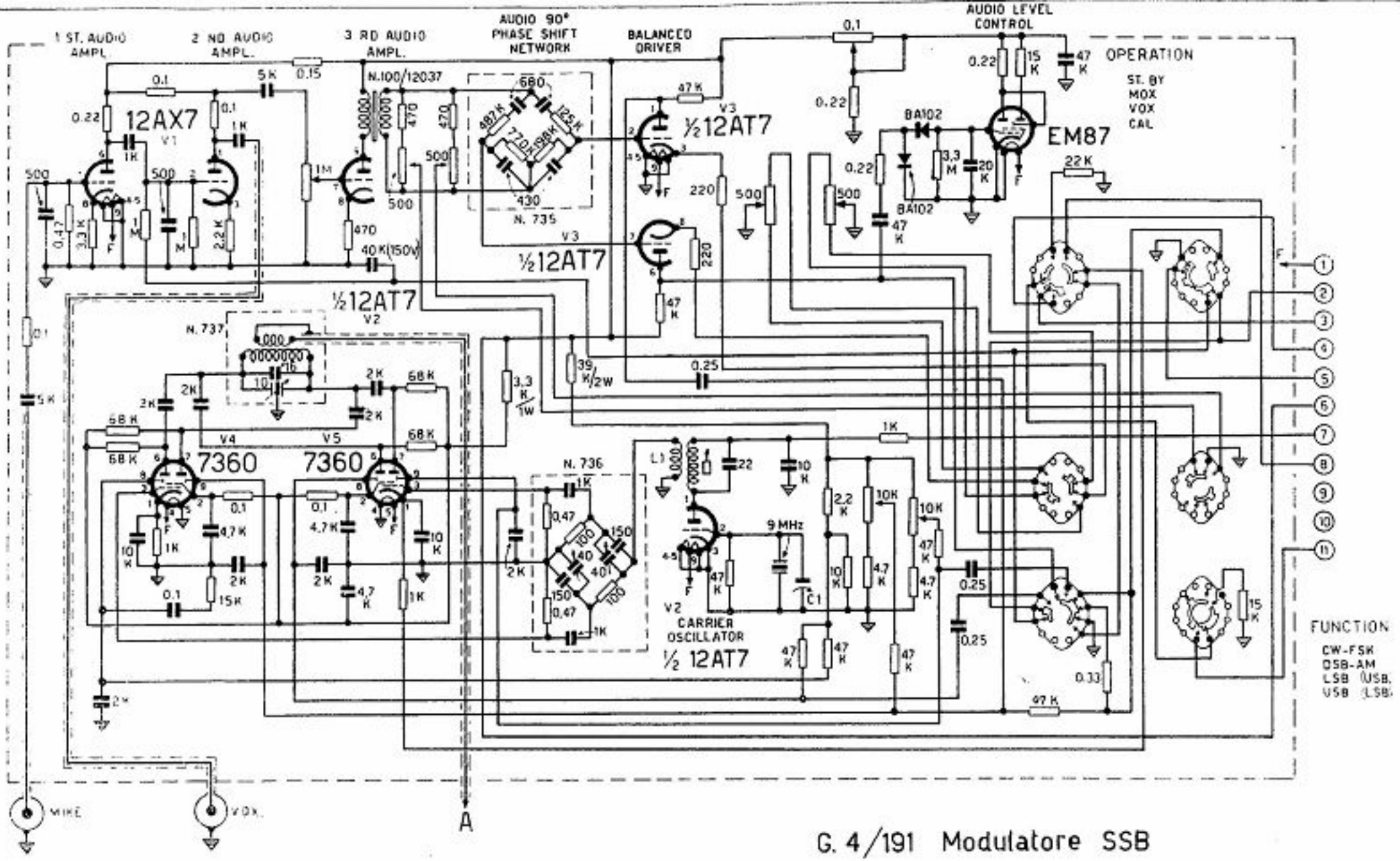

G. 4/191 Modulatore SSB

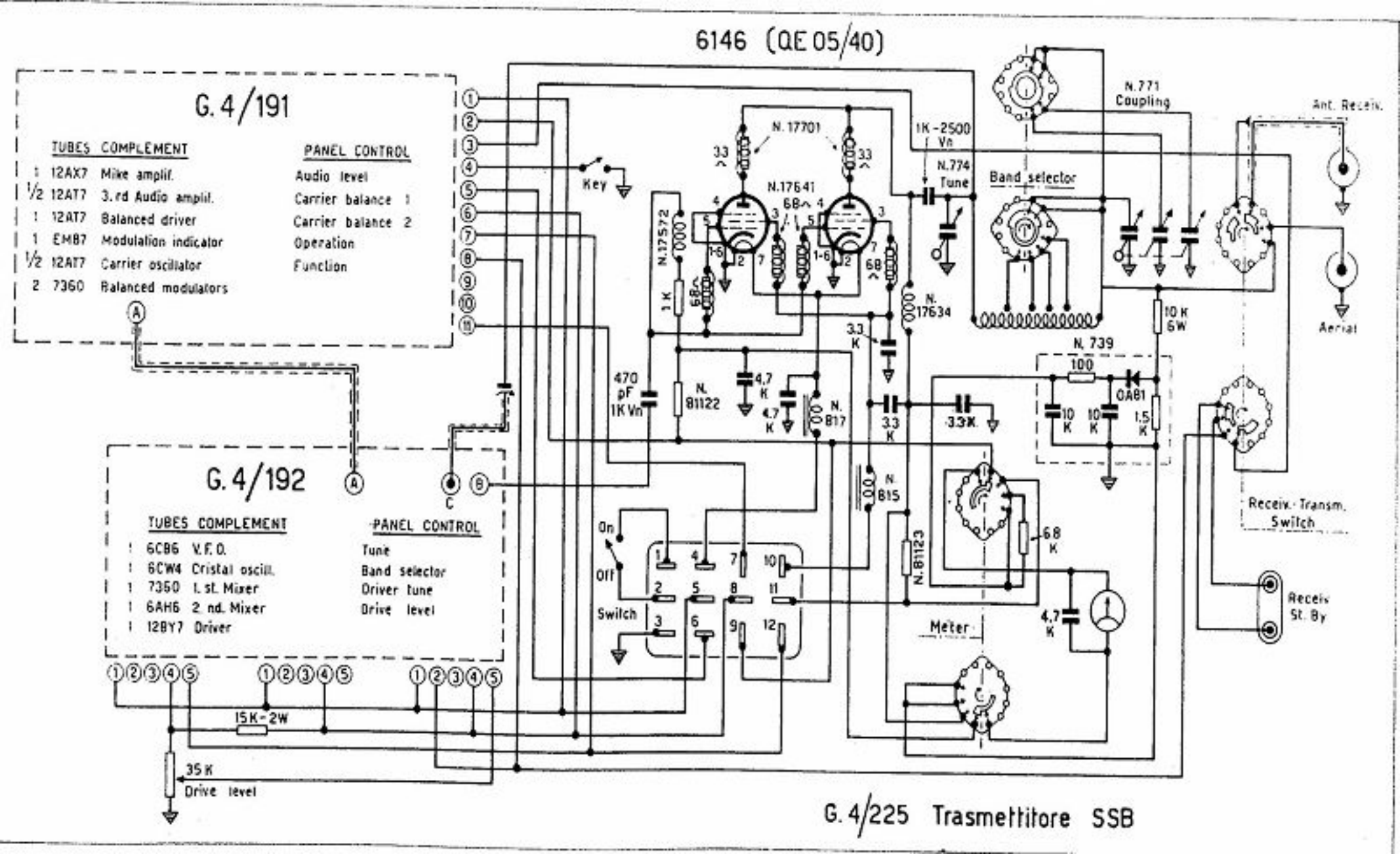
6146 (QE 05/40)
G. 4/191
TUBES COMPLEMENT
1 12AX7 Mike amplif.
1/2 12AT7 3.rd Audio amplif.
1 12AT7 Balanced driver
1 EM87 Modulation indicator
1/2 12AT7 Carrier oscillator
2 7360 Balanced modulators
PANEL CONTROL
Audio level
Carrier balance 1
Carrier balance 2
Operation
Function
G. 4/192
TUBES COMPLEMENT
1 6CB6 V.F.O.
1 6CW4 Cristal oscill.
1 7360 1. st. Mixer
1 6AH6 2 nd. Mixer
1 12BY7 Driver
PANEL CONTROL
Tune
Band selector
Driver tune
Drive level
Key
N. 17701
N. 17641
N. 17572
N. 17634
N. 81122
N. 817
N. 815
N. 81123
N. 771 Coupling
N. 774 Tune
Band selector
N. 739
OA81
Ant. Receiv.
Aerial
Receiv.-Transm. Switch
Receiv St. By
Meter
On
Off
Switch
15K-2W
35K Drive level
G. 4/225 Trasmettitore SSB