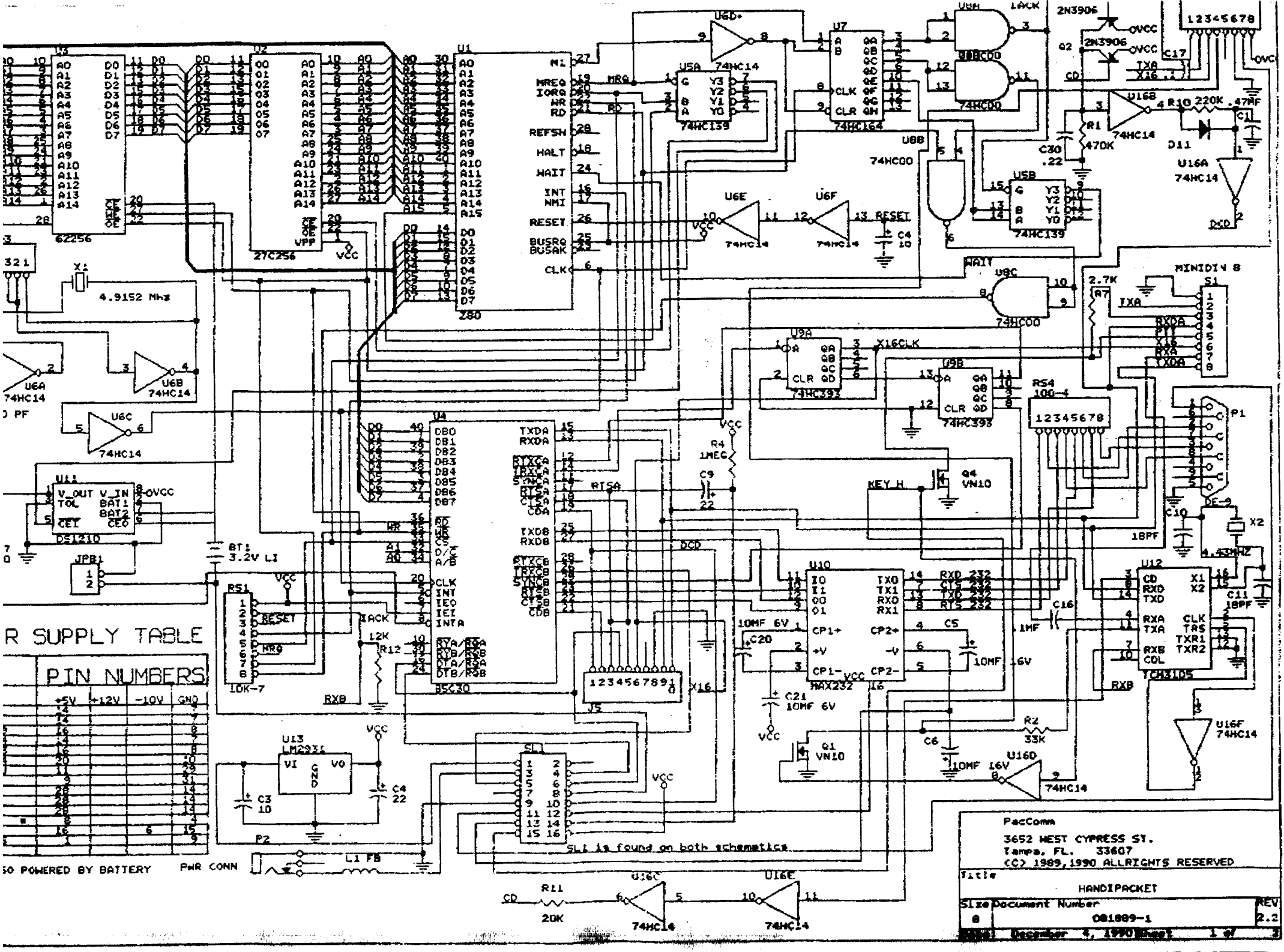
U1
Z80
U2
27C256
U3
62256
U4
85C30
U10
MAX232
U12
TCH310S
U11
DS1210
U13
LM2931
U5A
74HC139
U5B
74HC139
U7
74HC164
U8A
U8B
U8C
U9A
U9B
74HC393
U6A
U6B
U6C
U6D
U6E
U6F
U16A
U16B
U16C
U16D
U16E
U16F
74HC14
74HC00
X1
4.9152 MHz
X2
4.43MHZ
BT1
3.2V LI
JPB1
RS1
10K-7
RS4
100-4
P1
DE-9
S1
MINIDIN 8
Q1
VN10
Q4
VN10
Q2
2N3906
D11
J5
SL1
P2
PWR CONN
L1 FB
R SUPPLY TABLE
PIN NUMBERS
+5V
+12V
-10V
GND
SO POWERED BY BATTERY
SL1 is found on both schematics
PacComm
3652 WEST CYPRESS ST.
Tampa, FL. 33607
(C) 1989,1990 ALLRIGHTS RESERVED
Title
HANDIPACKET
Size
Document Number
081889-1
REV
2.2
December 4, 1990
Sheet 1 of 3

Scanned by IW1AXR
Downloaded by
RadioAmateur.EU

STATE BOARD

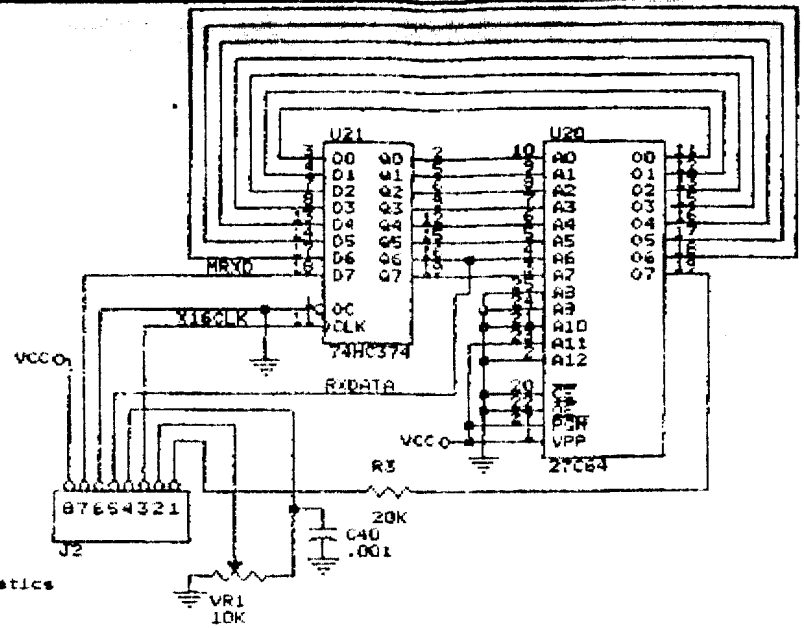

TX LEVEL

Scanned by IW1AXR
Downloaded by
RadioAmateur.EU

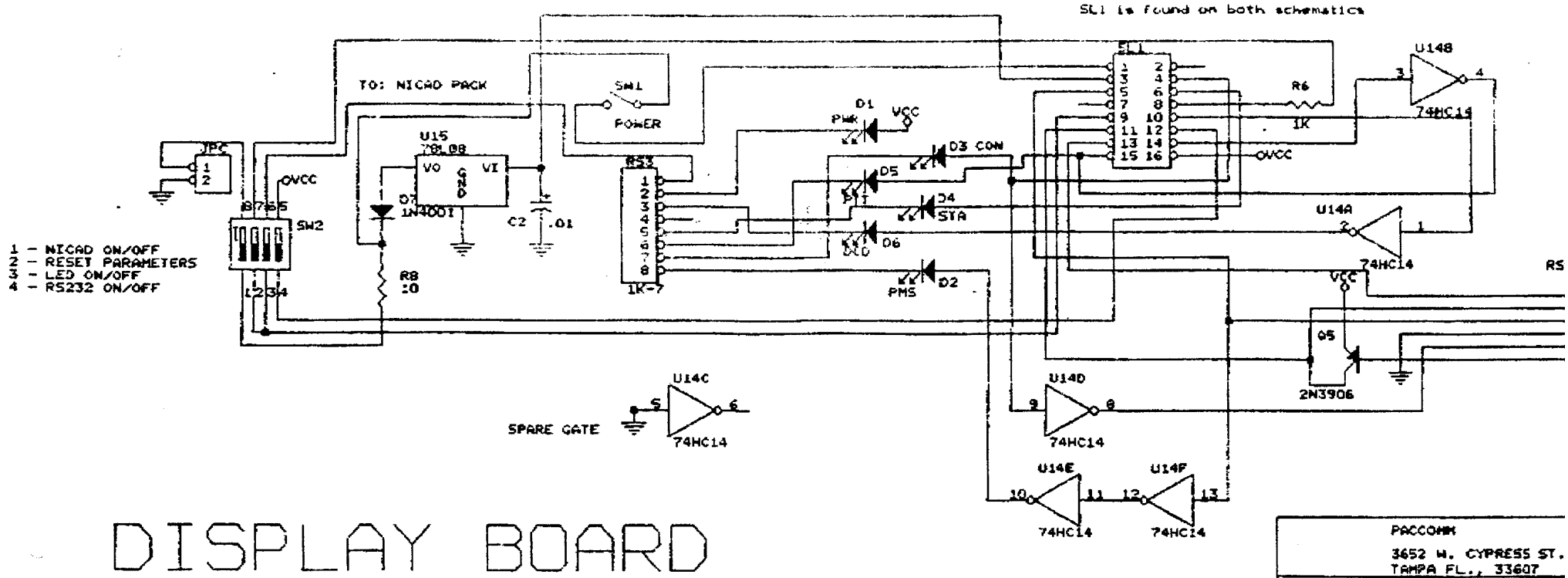

DISPLAY BOARD

PACCOMM
3652 W. CYPRESS ST.
TAMPA FL., 33607

Title	HANDIPACKET DCD AND SQUELCH
Size B	Document Number 120490
Date: December 4, 1990	Sheet