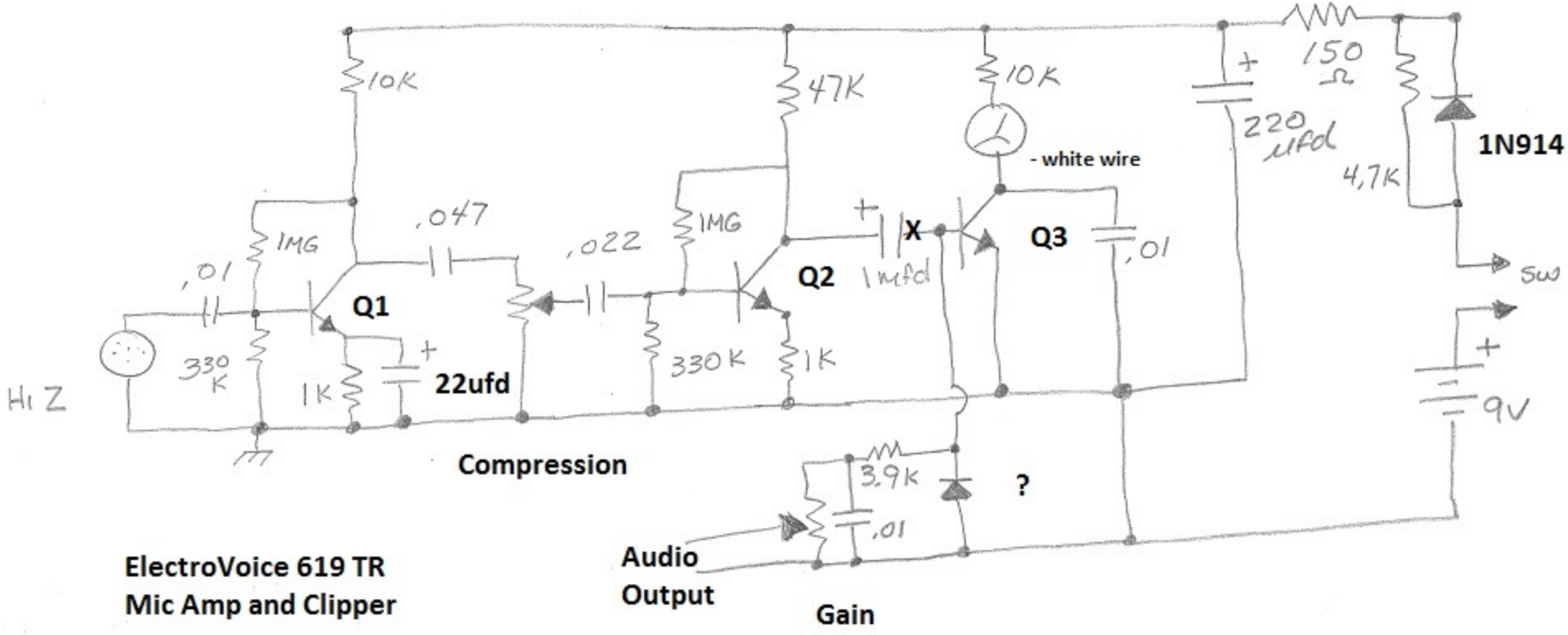

ElectroVoice 619 TR
Mic Amp and Clipper
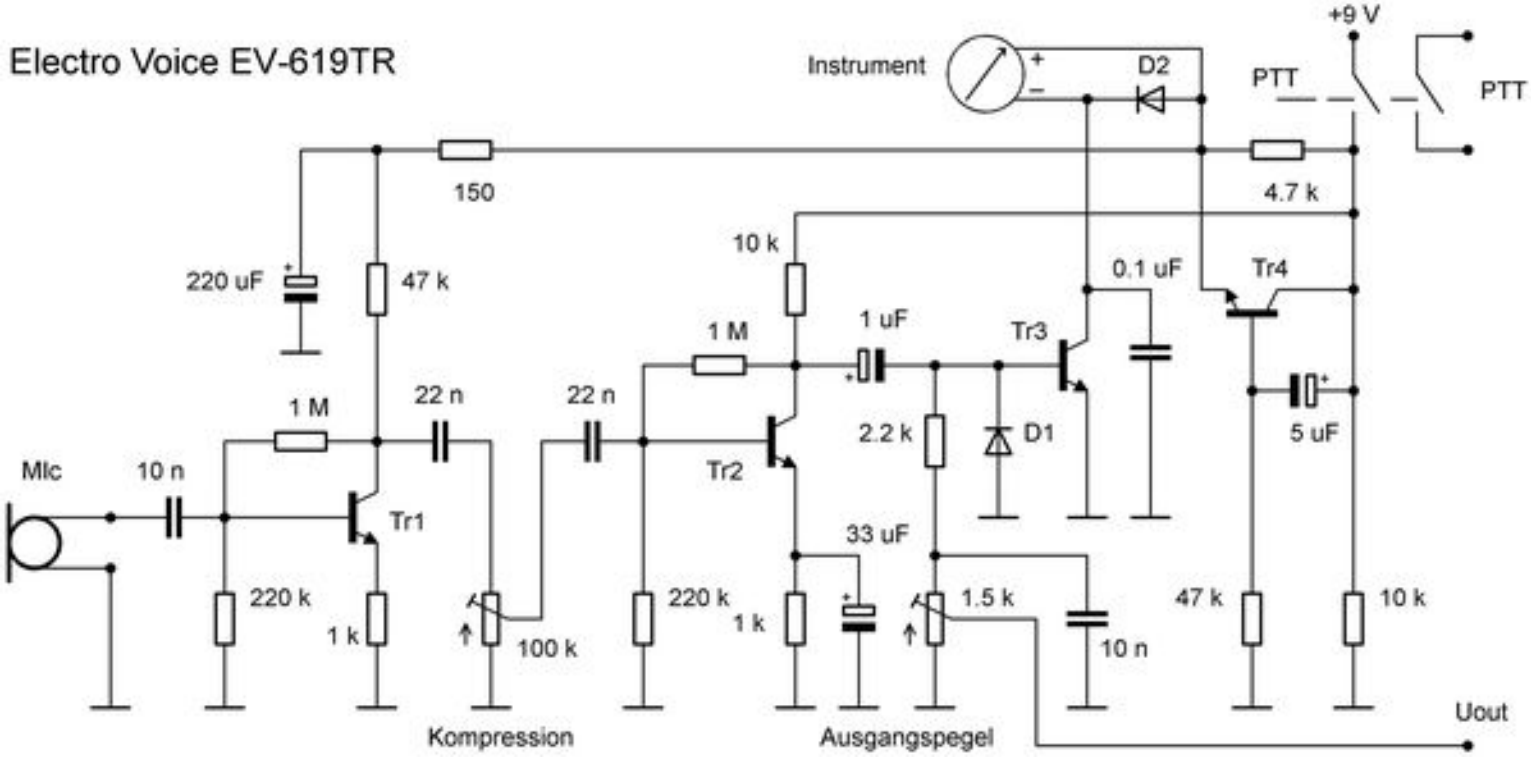
Electro Voice EV-619TR